DEPT OF BLDGS 121105539 Job Number
ES345289737 Scan Code

30" x 42" Arch E1 - SHEET SIZE

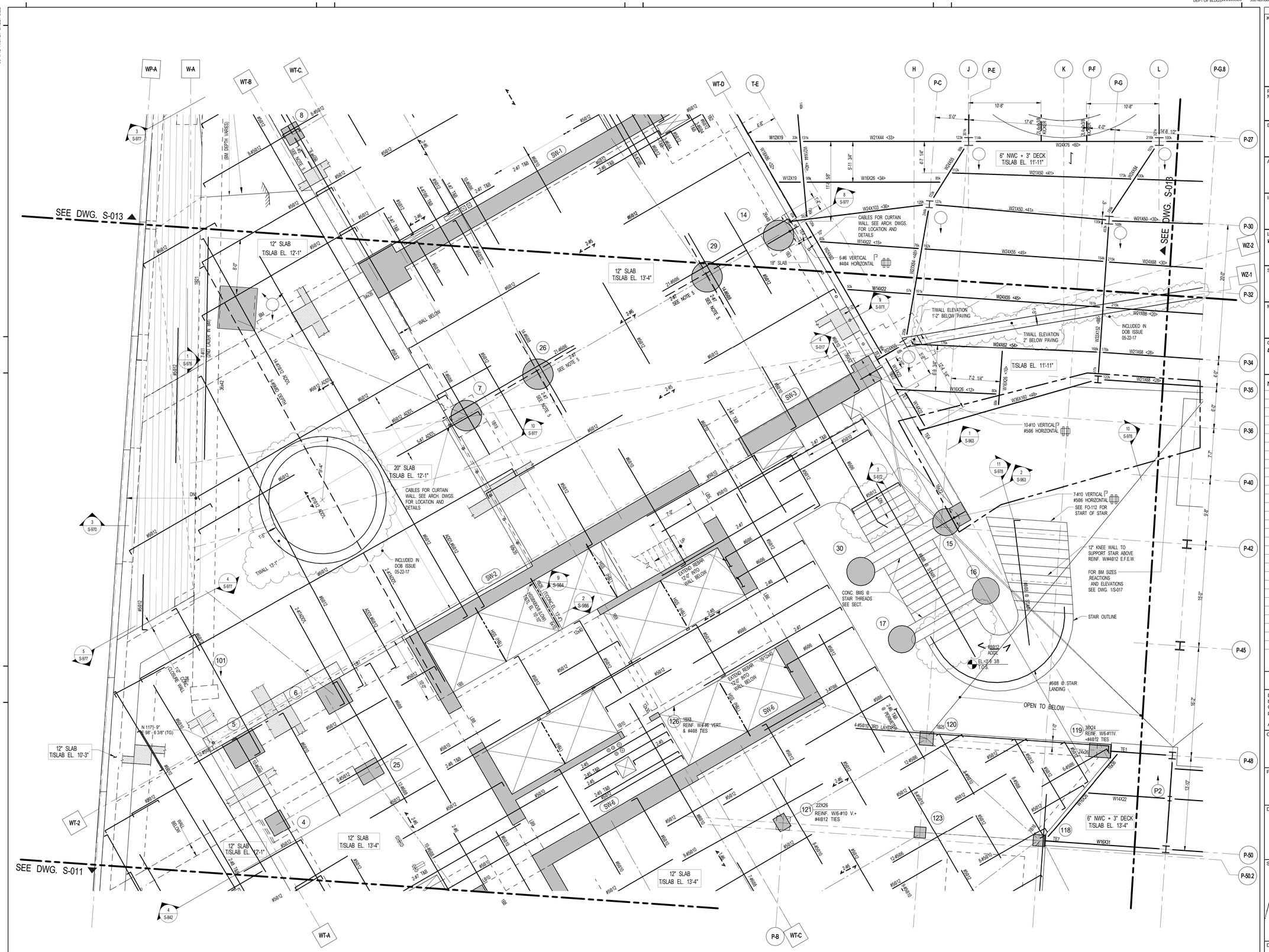

1 S-012 **1ST FLOOR FRAMING PLAN - PART 2**
SCALE: 3/16" = 1'-0"

NOTE:
1. FOR NOTES SEE CORESPONDING OVERALL FRAMING PLAN

FILE NAME:
PLOT DATE:

KEY PLAN:

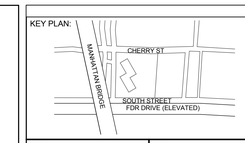

PROJECT NORTH | TRUE NORTH

DEVELOPER:
EXTELL DEVELOPMENT COMPANY
805 Third Ave, 7th Floor
New York, NY 10022
TEL: 212-712-6000 FAX: 212-712-6100

ARCHITECT OF RECORD:
AAI ARCHITECTS, P.C.
14 Wall Street, 2nd Floor
New York, NY 10005
TEL: 212-964-4040 FAX: 212-964-4090

INTERIOR DESIGNER:
MEYER DAVIS
180 Varick St, suite 404
New York, NY 10014
TEL: 212-627-5574

LANDSCAPE DESIGNER:
WEST 8 URBAN DESIGN & LANDSCAPE ARCHITECTURE P.C.
333 Hudson Street, Suite 905
New York, NY 10013
TEL: 212-285-0088 FAX: 212-285-0228

STRUCTURAL ENGINEERS:
WSP
228 East 45th Street
New York, NY 10017
TEL: 212-687-9888 FAX: 646-487-5501

MEP ENGINEERS:
ICOR ASSOCIATES, LLC
485 C Route 1 South, Suite 200
Iseline, NJ 08830
TEL: 908-272-3300 FAX: 908-272-4440

GEOTECHNICAL ENGINEERS:
LANGAN ENGINEERING & ENVIRONMENTAL SERVICES
21 Penn Plaza - 360 West 31st Street, 8th Floor
New York, NY 10001
TEL: 212.479.5400 FAX: 212.479.5444

No.	DESCRIPTION:	DATE:
	DESIGN DEVELOPMENT	10-07-14
	STEEL BID PACKAGE	02-24-15
	CONCRETE BID PACKAGE	03-06-15
	ADDENDUM #3	03-27-15
	50% CONSTRUCTION DOCUMENTS	04-08-15
	ADDENDUM #4	04-24-15
	ISSUED FOR FILING	07-28-15
	80% CONSTRUCTION DOCUMENTS	08-14-15
	ADDENDUM #11	09-25-15
	ADDENDUM #14	10-22-15
	ADDENDUM #15	11-18-15
	90% CONSTRUCTION DOCUMENTS	01-15-16
	ADDENDUM #16	02-04-16
	ISSUED FOR FILING	03-07-16
	ASI#59	03-11-16
	ISSUE FOR CONSTRUCTION	03-18-16
1	ASI#61	04-22-16
2	ASI #67	06-17-16
3	ASI #71	07-29-16
	ISSUED FOR FILING	05-22-17

Discrepancies must be reported immediately to the Architect before proceeding. Only figured dimensions are to be used. Contractors must check all dimensions on site. This drawing is protected by copyright.

ALL DIMENSIONS ARE SHOWN IN IMPERIAL.

CONSULTANT:
WSP

PROJECT:
252 SOUTH STREET
NEW YORK, NY

DRAWING TITLE:
1ST FLOOR FRAMING PLAN - PART 2

SEAL & SIGNATURE:
STATE OF NEW YORK · AHMAD RAHIMIAN · No. 085027 · LICENSED PROFESSIONAL ENGINEER

DATE:	03/03/14
PROJECT No:	1302510
DRAWN: CAD	REV:
CHK: CL	
SCALE:	
DWG No:	**S-012.03**
DOB PAGE No:	of

DOB EMPLOYEE STAMP:
Tina Mathew, RA
Building
APPROVED
Under Directive 2 of 1975
AMENDED APPLICATION
Date: 10/23/2017
NYC Development Hub

DOB B-SCAN:

DEPT OF BLDGS 121185038 Job Number

E-598660509 Scan Code

30" x 42" ANSI E1 - SHEET SIZE

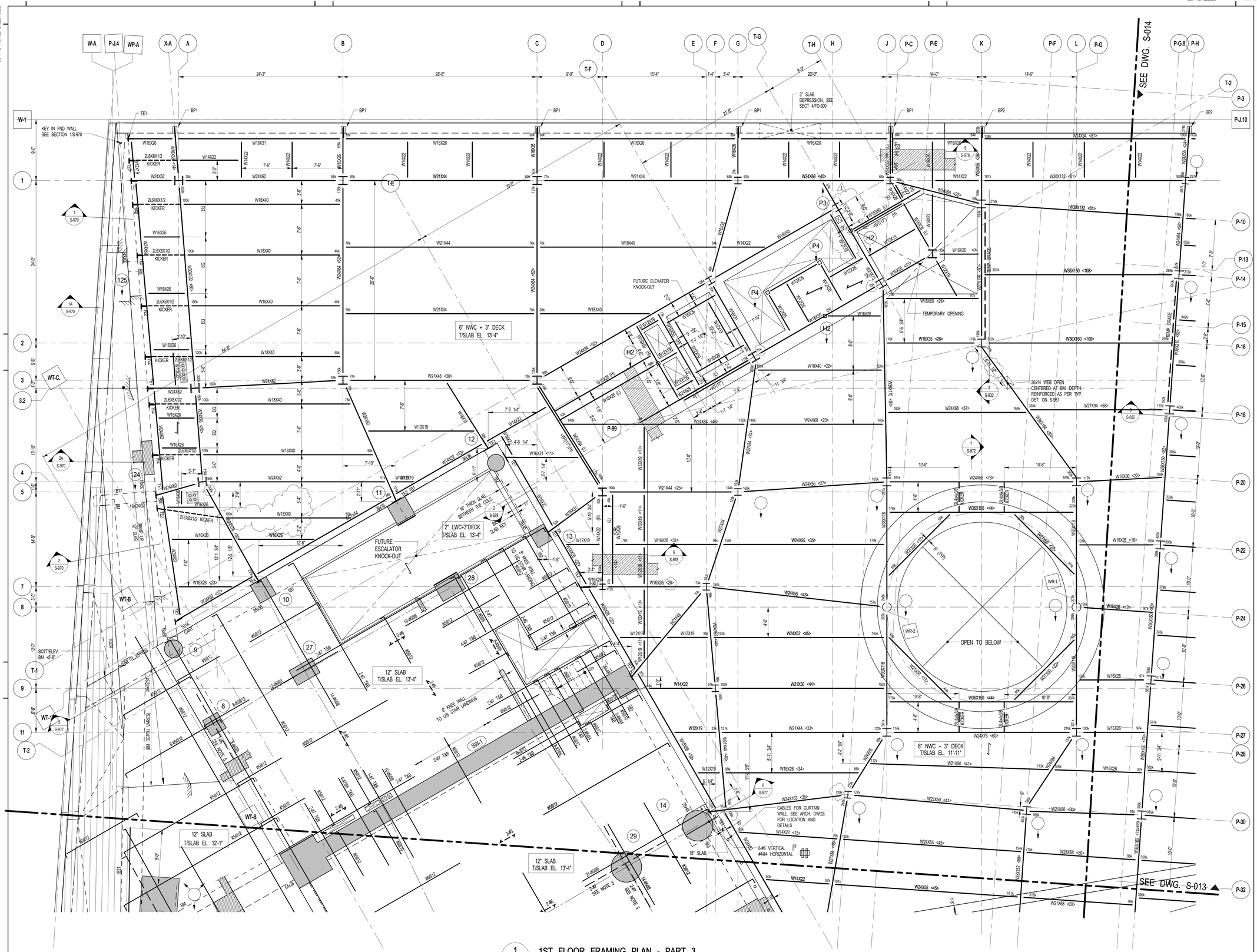

1 S-013 **1ST FLOOR FRAMING PLAN - PART 3**

SCALE: 3/16" = 1'-0"

NOTE:
1. FOR NOTES SEE CORESPONDING OVERALL FRAMING PLAN

FILE NAME:
PLOT DATE:

KEY PLAN:

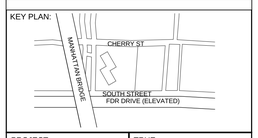

PROJECT NORTH

TRUE NORTH

DEVELOPER:
EXTELL DEVELOPMENT COMPANY
805 Third Ave, 7th Floor
New York, NY 10022
TEL: 212-712-6000 FAX: 212-712-6100

ARCHITECT OF RECORD:
AAI ARCHITECTS, P.C.
14 Wall Street, 2nd Floor
New York, NY 10005
TEL: 212-964-4040 FAX: 212-964-4090

INTERIOR DESIGNER:
MEYER DAVIS
180 Varick St, suite 404
New York, NY 10014
TEL: 212-627-5574

LANDSCAPE DESIGNER:
WEST 8 URBAN DESIGN & LANDSCAPE ARCHITECTURE P.C.
333 Hudson Street, Suite 905
New York, NY 10013
TEL: 212-285-0088 FAX: 212-285-0228

STRUCTURAL ENGINEERS:
WSP
228 East 45th Street
New York, NY 10017
TEL: 212-687-9888 FAX: 646-487-5501

MEP ENGINEERS:
ICOR ASSOCIATES, LLC
485 C Route 1 South, Suite 200
Iselin, NJ 08830
TEL: 908-272-3300 FAX: 908-272-4440

GEOTECHNICAL ENGINEERS:
LANGAN ENGINEERING & ENVIRONMENTAL SERVICES
21 Penn Plaza - 360 West 31st Street, 8th Floor
New York, NY 10001
TEL: 212.479.5400 FAX: 212.479.5444

No.	DESCRIPTION:	DATE:
	DESIGN DEVELOPMENT	10-07-14
	STEEL BID PACKAGE	02-24-15
	CONCRETE BID PACKAGE	03-06-15
	ADDENDUM #3	03-27-15
	50% CONSTRUCTION DOCUMENTS	04-08-15
	ADDENDUM #4	04-24-15
	ADDENDUM #5	05-01-15
	ADDENDUM #9	07-10-15
	ADDENDUM #10	07-20-15
	ISSUED FOR FILING	07-28-15
	80% CONSTRUCTION DOCUMENTS	08-14-15
	ADDENDUM #11	09-25-15
	ADDENDUM #14	10-22-15
	ADDENDUM #15	11-18-15
	90% CONSTRUCTION DOCUMENTS	01-15-16
	ASI #55	02-12-16
	ASI #56	02-19-16
	ISSUED FOR FILING	03-07-16
	ASI#59	03-11-16
	ISSUE FOR CONSTRUCTION	03-18-16
1	ASI#61	04-22-16
	ISSUED FOR FILING	05-22-17

Discrepancies must be reported immediately to the Architect before proceeding. Only figured dimensions are to be used. Contractors must check all dimensions on site. This drawing is protected by copyright.

ALL DIMENSIONS ARE SHOWN IN IMPERIAL.

CONSULTANT:
WSP

PROJECT:
252 SOUTH STREET
NEW YORK, NY

DRAWING TITLE:
1ST FLOOR FRAMING PLAN - PART 3

SEAL & SIGNATURE:

DATE:	03/03/14
PROJECT No:	1302510
DRAWN: CAD	REV:
CHK: CL	
SCALE:	
DWG No:	**S-013.03**
DOB PAGE No:	of

DOB EMPLOYEE STAMP:

Tina Mathew, RA

APPROVED
Under Directive 2 of 1975
AMENDED APPLICATION
Date: 10/23/2017
NYC Development Hub

DOB B-SCAN:

DEPT OF BLDGS121185539 Job Number
E1566788O291 Scan Code

30" x 42" Arch E1 - SHEET SIZE

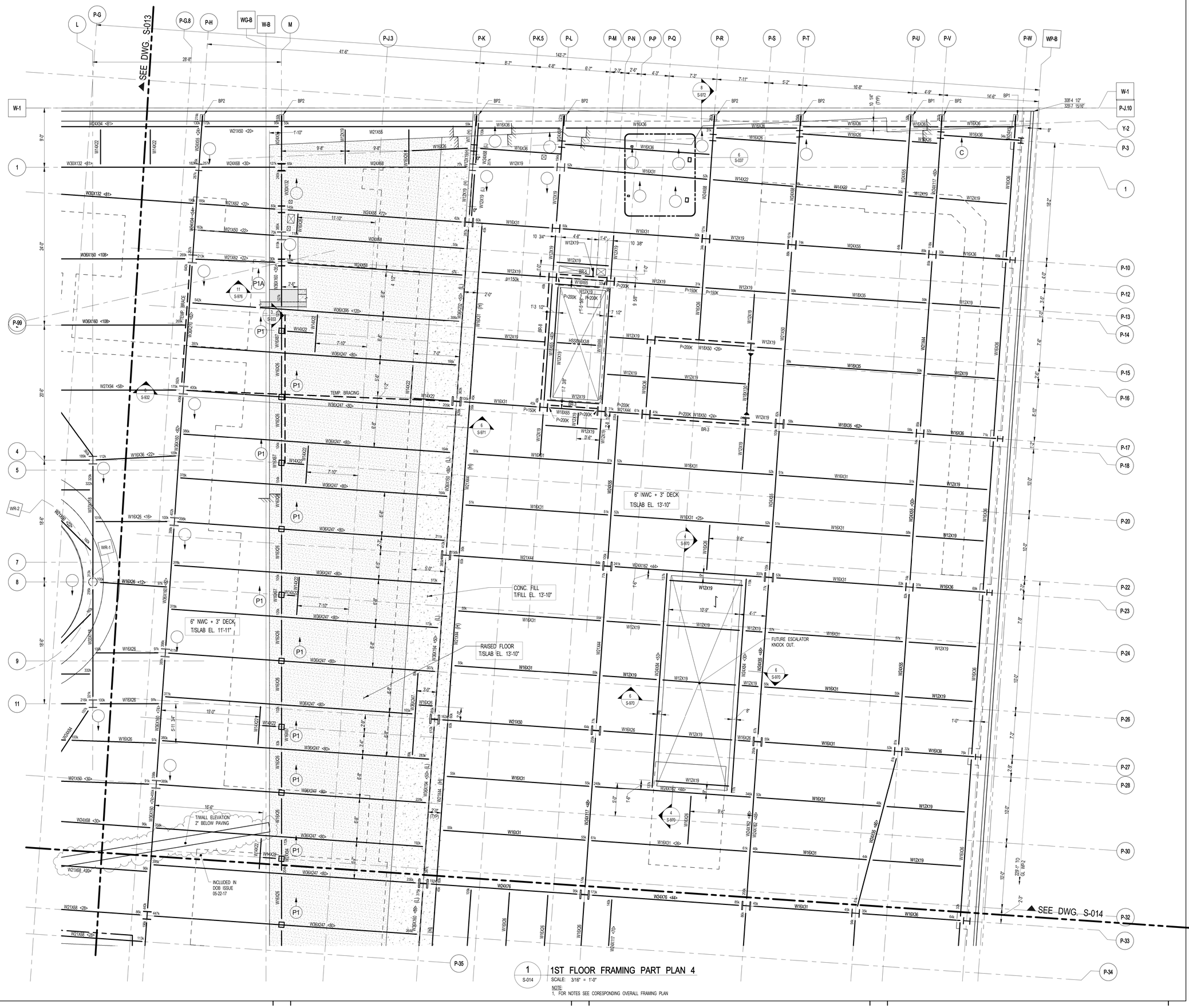

1 S-014 — 1ST FLOOR FRAMING PART PLAN 4

SCALE: 3/16" = 1'-0"

NOTE:
1. FOR NOTES SEE CORESPONDING OVERALL FRAMING PLAN

KEY PLAN:

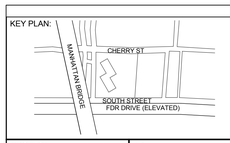

PROJECT NORTH

TRUE NORTH

DEVELOPER:
EXTELL DEVELOPMENT COMPANY
805 Third Ave, 7th Floor
New York, NY 10022
TEL: 212-712-6000 FAX: 212-712-6100

ARCHITECT OF RECORD:
AAI ARCHITECTS, P.C.
14 Wall Street, 2nd Floor
New York, NY 10005
TEL: 212-964-4040 FAX: 212-964-4090

INTERIOR DESIGNER:
MEYER DAVIS
180 Varick St, suite 404
New York, NY 10014
TEL: 212-627-5574

LANDSCAPE DESIGNER:
WEST 8 URBAN DESIGN & LANDSCAPE ARCHITECTURE P.C.
333 Hudson Street, Suite 905
New York, NY 10013
TEL: 212-285-0088 FAX: 212-285-0228

STRUCTURAL ENGINEERS:
WSP
228 East 45th Street
New York, NY 10017
TEL: 212-687-9888 FAX: 646-487-5501

MEP ENGINEERS:
ICOR ASSOCIATES, LLC
485 C Route 1 South, Suite 200
Iseline, NJ 08830
TEL: 908-272-3300 FAX: 908-272-4440

GEOTECHNICAL ENGINEERS:
LANGAN ENGINEERING & ENVIRONMENTAL SERVICES
21 Penn Plaza - 360 West 31st Street, 8th Floor
New York, NY 10001
TEL: 212.479.5400 FAX: 212.479.5444

No.	DESCRIPTION:	DATE:
	DESIGN DEVELOPMENT	10-07-14
	STEEL BID PACKAGE	02-24-15
	ADDENDUM #3	03-27-15
	50% CONSTRUCTION DOCUMENTS	04-08-15
	ADDENDUM #4	04-24-15
	ADDENDUM #5	05-01-15
	ADDENDUM #9	07-10-15
	ADDENDUM #10	07-20-15
	ISSUED FOR FILING	07-28-15
	80% CONSTRUCTION DOCUMENTS	08-14-15
	ADDENDUM #11	09-25-15
	ADDENDUM #14	10-22-15
	ADDENDUM #15	11-18-15
	90% CONSTRUCTION DOCUMENTS	01-15-16
	ADDENDUM #16	02-04-16
	ASI #55	02-12-16
	ASI #56	02-19-16
	ASI #58	03-04-16
	ISSUED FOR FILING	03-07-16
	ISSUE FOR CONSTRUCTION	03-18-16
1	ASI#61	04-22-16
2	ASI #65	05-20-16
3	ASI #75	10-10-16
	ISSUED FOR FILING	05-22-17

Discrepancies must be reported immediately to the Architect before proceeding. Only figured dimensions are to be used. Contractors must check all dimensions on site. This drawing is protected by copyright.

ALL DIMENSIONS ARE SHOWN IN IMPERIAL.

CONSULTANT:
WSP

PROJECT:
252 SOUTH STREET
NEW YORK, NY

DRAWING TITLE:
1ST FLOOR FRAMING PLAN - PART 4

SEAL & SIGNATURE:
STATE OF NEW YORK — AHMAD RAHIMIAN — No. 085852 — LICENSED PROFESSIONAL ENGINEER

DATE:	03/03/14
PROJECT No:	1302510
DRAWN: CAD	REV:
CHK: CL	
SCALE:	
DWG No:	**S-014.03**
DOB PAGE No:	of

DOB EMPLOYEE STAMP:
Tina Mathew, RA
APPROVED
Under Directive 2 of 1975
AMENDED APPLICATION
Date: 10/23/2017
NYC Development Hub

DOB B-SCAN:

FILE NAME:
PLOT DATE:

DEPT OF BLDGS 121185538 Job Number
E 599594474 Scan Code
30" x 42" Arch E1 SHEET SIZE

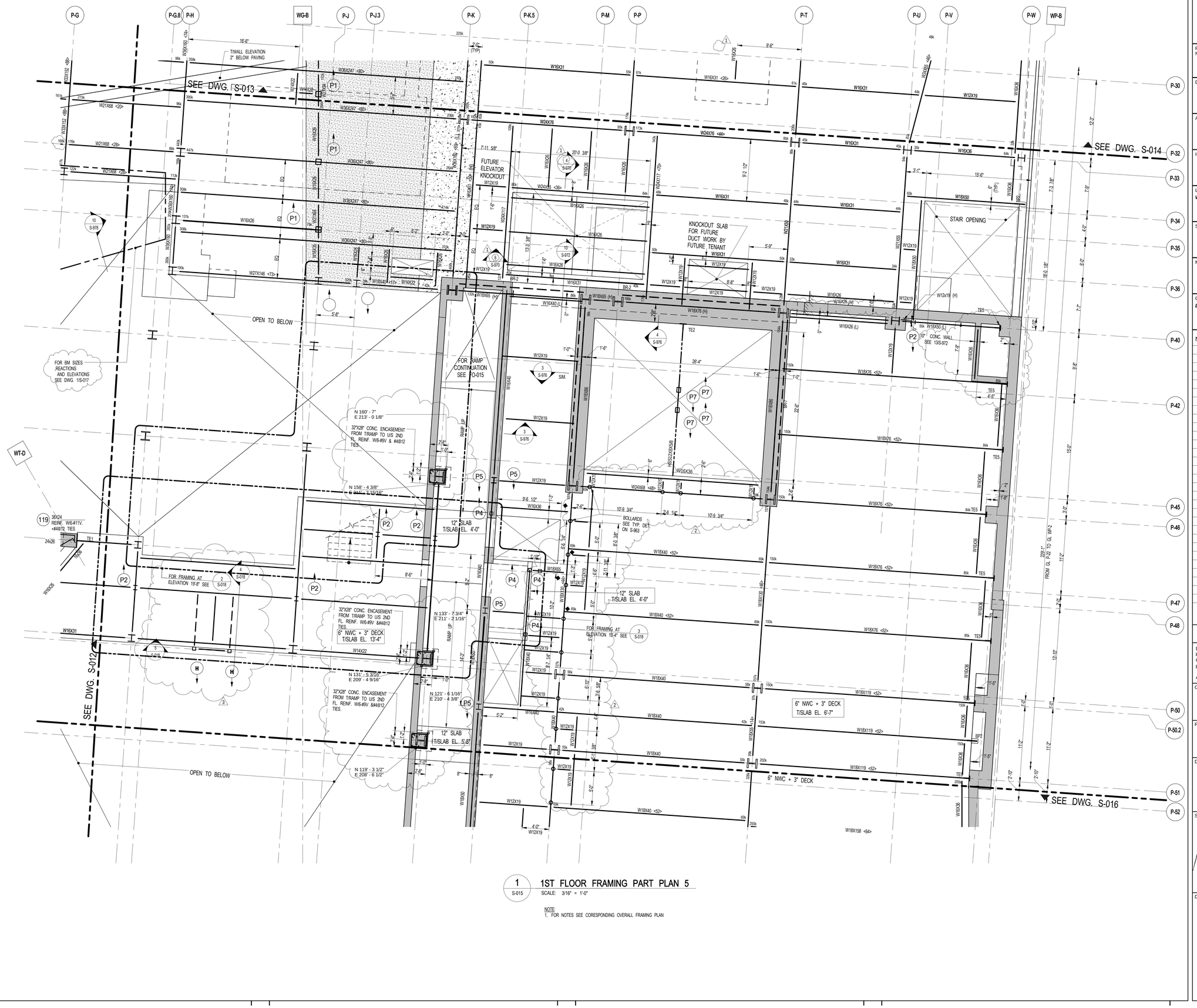

1 S-015 **1ST FLOOR FRAMING PART PLAN 5**
SCALE: 3/16" = 1'-0"

NOTE:
1. FOR NOTES SEE CORESPONDING OVERALL FRAMING PLAN

FILE NAME:
PLOT DATE:

KEY PLAN:

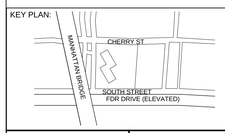

PROJECT NORTH | TRUE NORTH

DEVELOPER:
EXTELL DEVELOPMENT COMPANY
805 Third Ave, 7th Floor
New York, NY 10022
TEL: 212-712-6000 FAX: 212-712-6100

ARCHITECT OF RECORD:
AAI ARCHITECTS, P.C.
14 Wall Street, 2nd Floor
New York, NY 10005
TEL: 212-964-4040 FAX: 212-964-4090

INTERIOR DESIGNER:
MEYER DAVIS
180 Varick St, suite 404
New York, NY 10014
TEL: 212-627-5574

LANDSCAPE DESIGNER:
WEST 8 URBAN DESIGN & LANDSCAPE ARCHITECTURE P.C.
333 Hudson Street, Suite 905
New York, NY 10013
TEL: 212-285-0088 FAX: 212-285-0228

STRUCTURAL ENGINEERS:
WSP
228 East 45th Street
New York, NY 10017
TEL: 212-687-9888 FAX: 646-487-5501

MEP ENGINEERS:
ICOR ASSOCIATES, LLC
485 C Route 1 South, Suite 200
Iseline, NJ 08830
TEL: 908-272-3300 FAX: 908-272-4440

GEOTECHNICAL ENGINEERS:
LANGAN ENGINEERING & ENVIRONMENTAL SERVICES
21 Penn Plaza - 360 West 31st Street, 8th Floor
New York, NY 10001
TEL: 212.479.5400 FAX: 212.479.5444

No.	DESCRIPTION:	DATE:
	DESIGN DEVELOPMENT	10-07-14
	STEEL BID PACKAGE	02-24-15
	ADDENDUM #3	03-27-15
	50% CONSTRUCTION DOCUMENTS	04-08-15
	ADDENDUM #4	04-24-15
	ADDENDUM #5	05-01-15
	ADDENDUM #9	07-10-15
	ISSUED FOR FILING	07-28-15
	80% CONSTRUCTION DOCUMENTS	08-14-15
	ADDENDUM #11	09-25-15
	90% CONSTRUCTION DOCUMENTS	01-15-16
	ADDENDUM #16	02-04-16
	ASI #55	02-12-16
	ASI #56	02-19-16
	ASI #58	03-04-16
	ISSUED FOR FILING	03-07-16
	ASI#59	03-11-16
	ISSUE FOR CONSTRUCTION	03-18-16
1	ASI#61	04-22-16
2	ASI #64	05-13-16
3	ASI #67	06-17-16
	ISSUED FOR FILING	05-22-17

Discrepancies must be reported immediately to the Architect before proceeding. Only figured dimensions are to be used. Contractors must check all dimensions on site. This drawing is protected by copyright.

ALL DIMENSIONS ARE SHOWN IN IMPERIAL.

CONSULTANT:
WSP

PROJECT:
252 SOUTH STREET
NEW YORK, NY

DRAWING TITLE:
1ST FLOOR FRAMING PLAN - PART 5

SEAL & SIGNATURE:
STATE OF NEW YORK · AHMAD RAMADAN · No. 086827 · LICENSED PROFESSIONAL ENGINEER

DATE:	03/03/14
PROJECT No:	1302510
DRAWN:	CAD
CHK:	CL
SCALE:	
REV:	
DWG No:	**S-015.03**
DOB PAGE No:	of

DOB EMPLOYEE STAMP:
Tina Mathew, RA
Buildings
APPROVED
Under Directive 2 of 1975
AMENDED APPLICATION
Date: 10/23/2017
NYC Development Hub

DOB B-SCAN:

DEPT OF BLDGS 121185539 Job Number
E366682G493 Scan Code

30" x 42" Arch E1 - SHEET SIZE

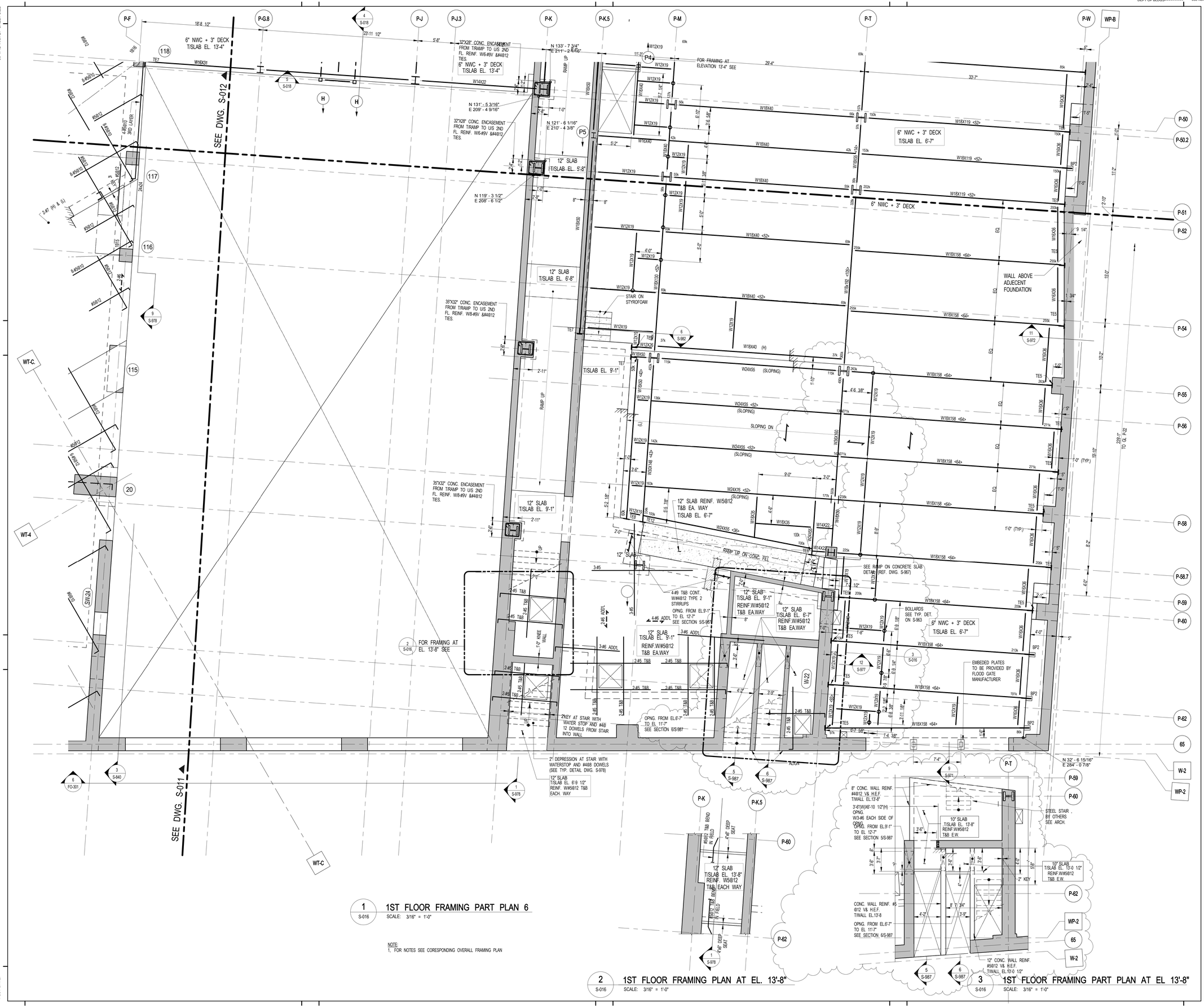

1 S-016 **1ST FLOOR FRAMING PART PLAN 6**
SCALE: 3/16" = 1'-0"

NOTE:
1, FOR NOTES SEE CORESPONDING OVERALL FRAMING PLAN

2 S-016 **1ST FLOOR FRAMING PLAN AT EL. 13'-8"**
SCALE: 3/16" = 1'-0"

3 S-016 **1ST FLOOR FRAMING PART PLAN AT EL 13'-8"**
SCALE: 3/16" = 1'-0"

FILE NAME:
PLOT DATE:

KEY PLAN:
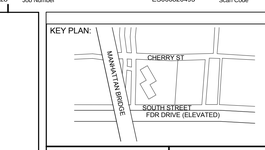

PROJECT NORTH | TRUE NORTH

DEVELOPER:
EXTELL DEVELOPMENT COMPANY
805 Third Ave, 7th Floor
New York, NY 10022
TEL: 212-712-6000 FAX: 212-712-6100

ARCHITECT OF RECORD:
AAI ARCHITECTS, P.C.
14 Wall Street, 2nd Floor
New York, NY 10005
TEL: 212-964-4040 FAX: 212-964-4090

INTERIOR DESIGNER:
MEYER DAVIS
180 Varick St, suite 404
New York, NY 10014
TEL: 212-627-5574

LANDSCAPE DESIGNER:
WEST 8 URBAN DESIGN & LANDSCAPE ARCHITECTURE P.C.
333 Hudson Street, Suite 905
New York, NY 10013
TEL: 212-285-0088 FAX: 212-285-0228

STRUCTURAL ENGINEERS:
WSP
228 East 45th Street
New York, NY 10017
TEL: 212-687-9888 FAX: 646-487-5501

MEP ENGINEERS:
ICOR ASSOCIATES, LLC
485 C Route 1 South, Suite 200
Iselin, NJ 08830
TEL: 908-272-3300 FAX: 908-272-4440

GEOTECHNICAL ENGINEERS:
LANGAN ENGINEERING & ENVIRONMENTAL SERVICES
21 Penn Plaza - 360 West 31st Street, 8th Floor
New York, NY 10001
TEL: 212.479.5400 FAX: 212.479.5444

No.	DESCRIPTION:	DATE:
	DESIGN DEVELOPMENT	10-07-14
	STEEL BID PACKAGE	02-24-15
	ADDENDUM #3	03-27-15
	50% CONSTRUCTION DOCUMENTS	04-08-15
	ADDENDUM #4	04-24-15
	ADDENDUM #5	05-01-15
	ADDENDUM #9	07-10-15
	ISSUED FOR FILING	07-28-15
	80% CONSTRUCTION DOCUMENTS	08-14-15
	ADDENDUM #11	09-25-15
	90% CONSTRUCTION DOCUMENTS	01-15-16
	ADDENDUM #16	02-04-16
	ASI #55	02-12-16
	ASI #56	02-19-16
	ASI #58	03-04-16
	ISSUED FOR FILING	03-07-16
	ASI#59	03-11-16
1	ASI #64	05-13-16
2	ASI #67	06-17-16
3	ASI #74	09-16-16
4	ASI #76	10-28-16
	ISSUED FOR FILING	05-22-17

Discrepancies must be reported immediately to the Architect before proceeding. Only figured dimensions are to be used. Contractors must check all dimensions on site. This drawing is protected by copyright.

ALL DIMENSIONS ARE SHOWN IN IMPERIAL.

CONSULTANT:
WSP

PROJECT:
252 SOUTH STREET
NEW YORK, NY

DRAWING TITLE:
1ST FLOOR FRAMING PLAN - PART 6

SEAL & SIGNATURE:
STATE OF NEW YORK — AHMAD RAHIMIAN — No. 085057 — LICENSED PROFESSIONAL ENGINEER

DATE:	03/03/14
PROJECT No:	1302510
DRAWN: CAD	REV:
CHK: CL	
SCALE:	
DWG No:	**S-016.03**
DOB PAGE No:	of

DOB EMPLOYEE STAMP:
Tina Mathew, RA
APPROVED
Under Directive 2 of 1975
AMENDED APPLICATION
Date: 10/23/2017
NYC Development Hub

DOB B-SCAN:

DEPT OF BLDGS121185539 Job Number
ES4201773975 Scan Code
30" x 42" Arch E1 - SHEET SIZE

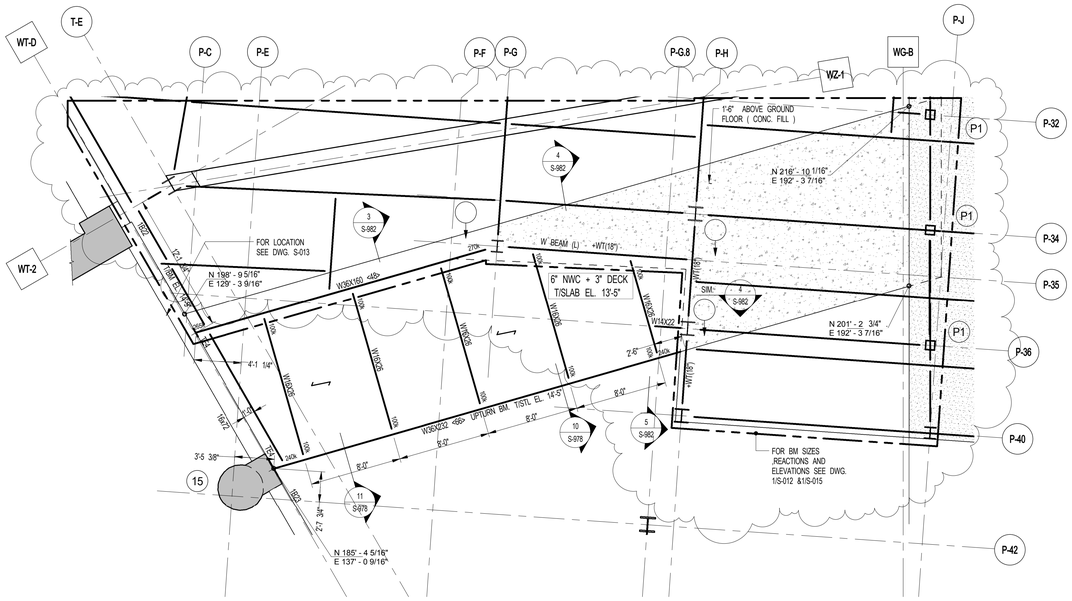

1 S-017 PART FRAMING PLAN AT EL. 13'-5"
SCALE: 3/16" = 1'-0"

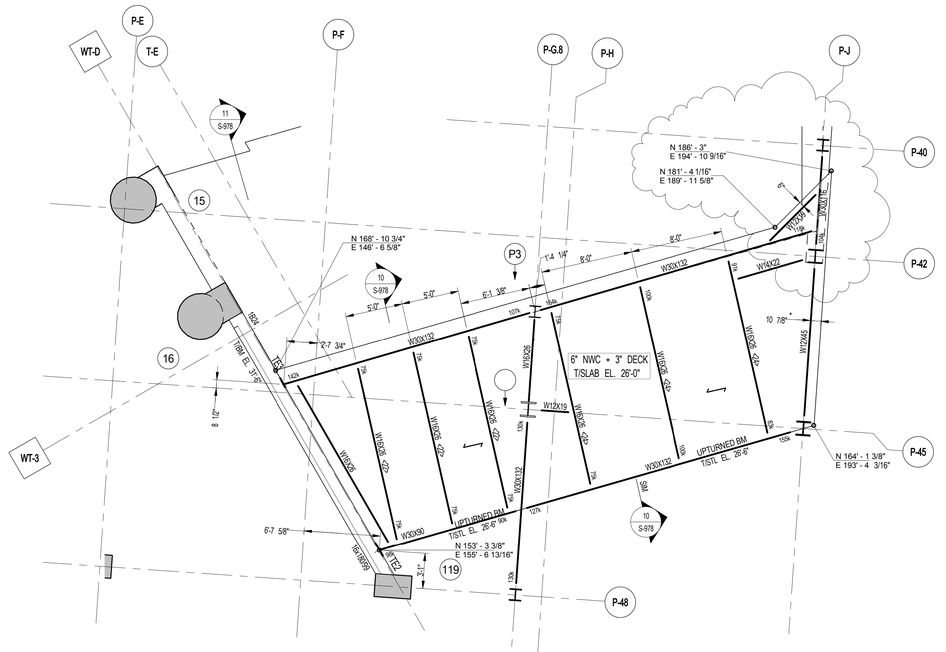

3 S-017 PART FRAMING PLAN AT EL.= 26'-0"
SCALE: 3/16" = 1'-0"

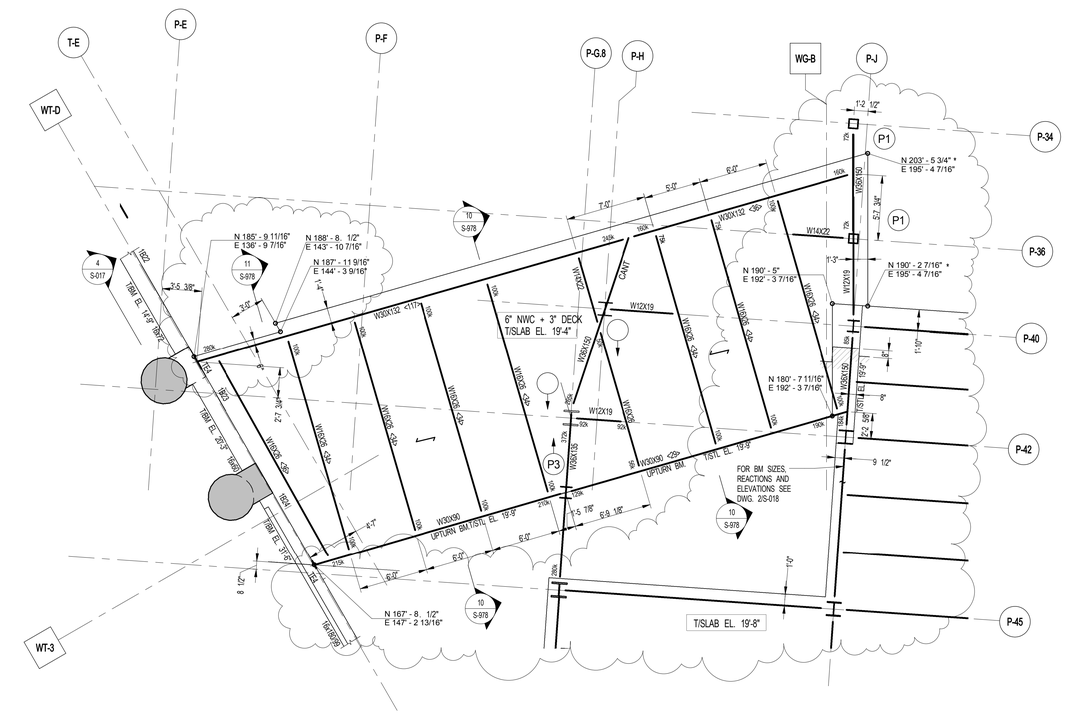

2 S-017 PART FRAMING PLAN AT EL. 19'-4"
SCALE: 3/16" = 1'-0"

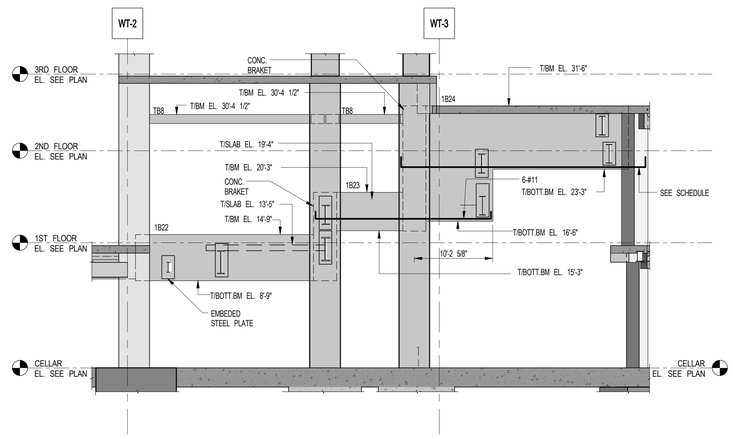

4 S-017 ELEVATION
SCALE: 1/8" = 1'-0"

NOTE:
1, FOR NOTES SEE CORESPONDING OVERALL FRAMING PLAN

KEY PLAN:
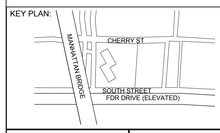

PROJECT NORTH | TRUE NORTH

DEVELOPER:
EXTELL DEVELOPMENT COMPANY
805 Third Ave, 7th Floor
New York, NY 10022
TEL: 212-712-6000 FAX: 212-712-6100

ARCHITECT OF RECORD:
AAI ARCHITECTS, P.C.
14 Wall Street, 2nd Floor
New York, NY 10005
TEL: 212-964-4040 FAX: 212-964-4090

INTERIOR DESIGNER:
MEYER DAVIS
180 Varick St, suite 404
New York, NY 10014
TEL: 212-627-5574

LANDSCAPE DESIGNER:
WEST 8 URBAN DESIGN & LANDSCAPE ARCHITECTURE P.C.
333 Hudson Street, Suite 905
New York, NY 10013
TEL: 212-285-0088 FAX: 212-285-0228

STRUCTURAL ENGINEERS:
WSP
228 East 45th Street
New York, NY 10017
TEL: 212-687-9888 FAX: 646-487-5501

MEP ENGINEERS:
ICOR ASSOCIATES, LLC
485 C Route 1 South, Suite 200
Iseline, NJ 08830
TEL: 908-272-3300 FAX: 908-272-4440

GEOTECHNICAL ENGINEERS:
LANGAN ENGINEERING & ENVIRONMENTAL SERVICES
21 Penn Plaza - 360 West 31st Street, 8th Floor
New York, NY 10001
TEL: 212.479.5400 FAX: 212.479.5444

No.	DESCRIPTION:	DATE:
	STEEL BID PACKAGE	02-24-15
	ADDENDUM #3	03-27-15
	50% CONSTRUCTION DOCUMENTS	04-08-15
	ADDENDUM #4	04-24-15
	ISSUED FOR FILING	07-28-15
	80% CONSTRUCTION DOCUMENTS	08-14-15
	ADDENDUM #14	10-22-15
	ADDENDUM #15	11-18-15
	90% CONSTRUCTION DOCUMENTS	01-15-16
	ADDENDUM #16	02-04-16
	ASI #55	02-12-16
	ASI #58	03-04-16
	ISSUED FOR FILING	03-07-16
	ISSUE FOR CONSTRUCTION	03-18-16
1	ASI #65	05-20-16
2	ASI #74	09-16-16
3	ASI #85	03-01-17
4	ASI #88	04-14-17
5	ASI #89	05-05-17
	ISSUED FOR FILING	05-22-17

Discrepancies must be reported immediately to the Architect before proceeding. Only figured dimensions are to be used. Contractors must check all dimensions on site. This drawing is protected by copyright.

ALL DIMENSIONS ARE SHOWN IN IMPERIAL.

CONSULTANT:
WSP

PROJECT:
252 SOUTH STREET
NEW YORK, NY

DRAWING TITLE:
SUMAC MEANDER PART FRAMING PLANS AND ELEVATIONS.

SEAL & SIGNATURE:
STATE OF NEW YORK · ANMAD RADWAN · LICENSED PROFESSIONAL ENGINEER · No. 085027

DATE: 02/24/15
PROJECT No: 1302510
DRAWN: CAD REV:
CHK: CL
SCALE: As indicated
DWG No:
S-017.03
DOB PAGE No: of

DOB EMPLOYEE STAMP:
Tina Mathew, RA
APPROVED
Under Directive 2 of 1975
AMENDED APPLICATION
Date: 10/23/2017
NYC Development Hub

DOB B-SCAN:

FILE NAME:
PLOT DATE:

DEPT OF BLDGS 121105039 Job Number
ES344.03.114 Scan Code

30" x 42" Arch E1 - SHEET SIZE

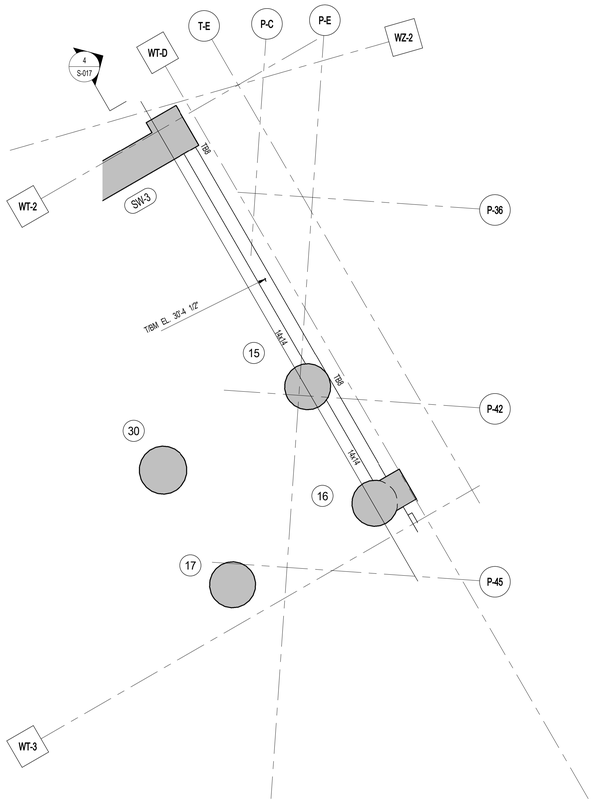

1 1ST FLOOR INTERMEDIATE FRAMING PART PLAN
S-018 SCALE: 3/16" = 1'-0"

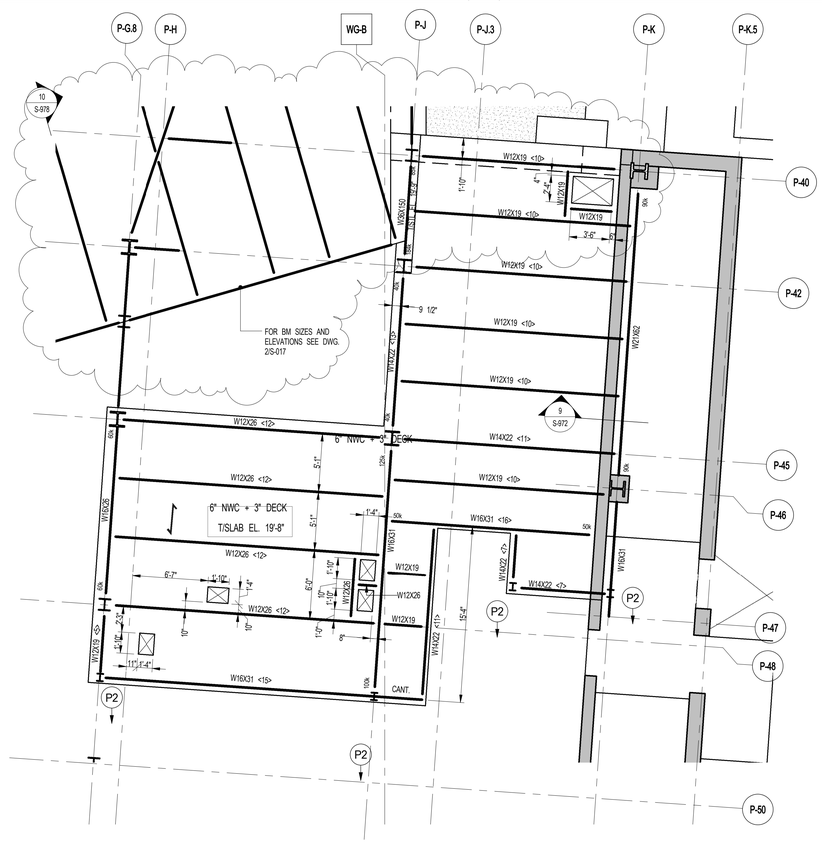

2 PART FRAMING PLAN @ EL. 19'-8"
S-018 SCALE: 3/16" = 1'-0"

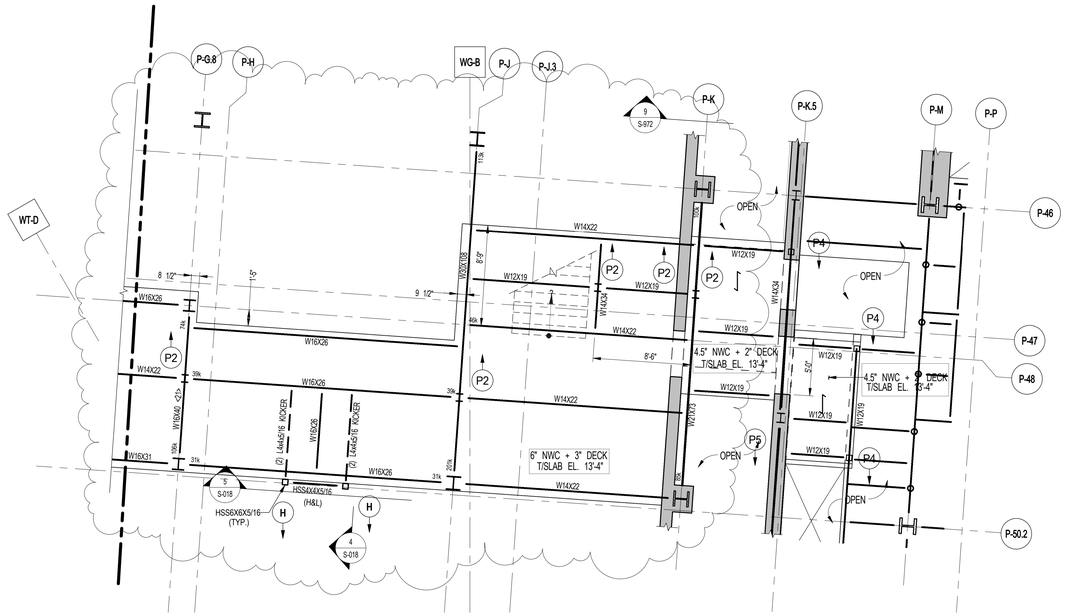

3 PART FRAMING PLAN AT RAMP EL. 13'-4"
S-018 SCALE: 3/16" = 1'-0"

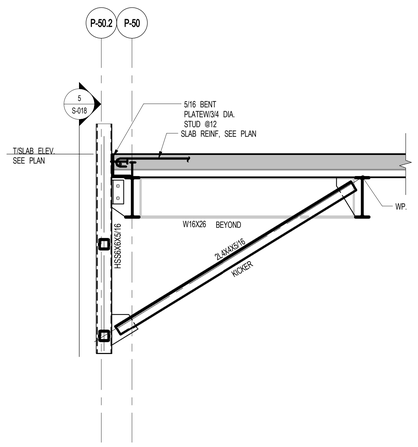

4 SECTION
S-018 SCALE: 1/2" = 1'-0"

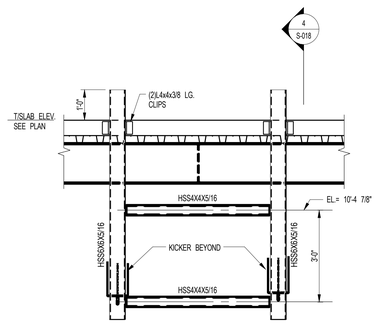

5 ELEVATION
S-018 SCALE: 1/2" = 1'-0"

KEY PLAN:

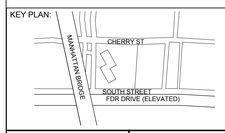

PROJECT NORTH | TRUE NORTH

DEVELOPER:
EXTELL DEVELOPMENT COMPANY
805 Third Ave, 7th Floor
New York, NY 10022
TEL: 212-712-6000 FAX: 212-712-6100

ARCHITECT OF RECORD:
AAI ARCHITECTS, P.C.
14 Wall Street, 2nd Floor
New York, NY 10005
TEL: 212-964-4040 FAX: 212-964-4090

INTERIOR DESIGNER:
MEYER DAVIS
180 Varick St, suite 404
New York, NY 10014
TEL: 212-627-5574

LANDSCAPE DESIGNER:
WEST 8 URBAN DESIGN & LANDSCAPE ARCHITECTURE P.C.
333 Hudson Street, Suite 905
New York, NY 10013
TEL: 212-285-0088 FAX: 212-285-0228

STRUCTURAL ENGINEERS:
WSP
228 East 45th Street
New York, NY 10017
TEL: 212-687-9888 FAX: 646-487-5501

MEP ENGINEERS:
ICOR ASSOCIATES, LLC
485 C Route 1 South, Suite 200
Iseline, NJ 08830
TEL: 908-272-3300 FAX: 908-272-4440

GEOTECHNICAL ENGINEERS:
LANGAN ENGINEERING & ENVIRONMENTAL SERVICES
21 Penn Plaza - 360 West 31st Street, 8th Floor
New York, NY 10001
TEL: 212.479.5400 FAX: 212.479.5444

No.	DESCRIPTION:	DATE:
	ASI #55	02-12-16
	ASI #56	02-19-16
	ISSUED FOR FILING	03-07-16
	ISSUE FOR CONSTRUCTION	03-18-16
1	ASI #67	06-17-16
2	ASI #76	10-28-16
3	ASI #89	05-05-17
	ISSUED FOR FILING	05-22-17

Discrepancies must be reported immediately to the Architect before proceeding. Only figured dimensions are to be used. Contractors must check all dimensions on site. This drawing is protected by copyright.

ALL DIMENSIONS ARE SHOWN IN IMPERIAL.

CONSULTANT: WSP

PROJECT:
252 SOUTH STREET
NEW YORK, NY

DRAWING TITLE:
PART FRAMING PLANS

SEAL & SIGNATURE: STATE OF NEW YORK · ARMAD RAMROOP · No. 065502 · LICENSED PROFESSIONAL ENGINEER

DATE:	12/15/15
PROJECT No:	1302510
DRAWN: CAD	REV:
CHK: CL	
SCALE: As indicated	
DWG No:	**S-018.01**
DOB PAGE No: of	

DOB EMPLOYEE STAMP: Tina Mathew, RA — APPROVED — Under Directive 2 of 1975 — AMENDED APPLICATION — Date: 10/23/2017 — NYC Development Hub

DOB B-SCAN:

FILE NAME:
PLOT DATE:

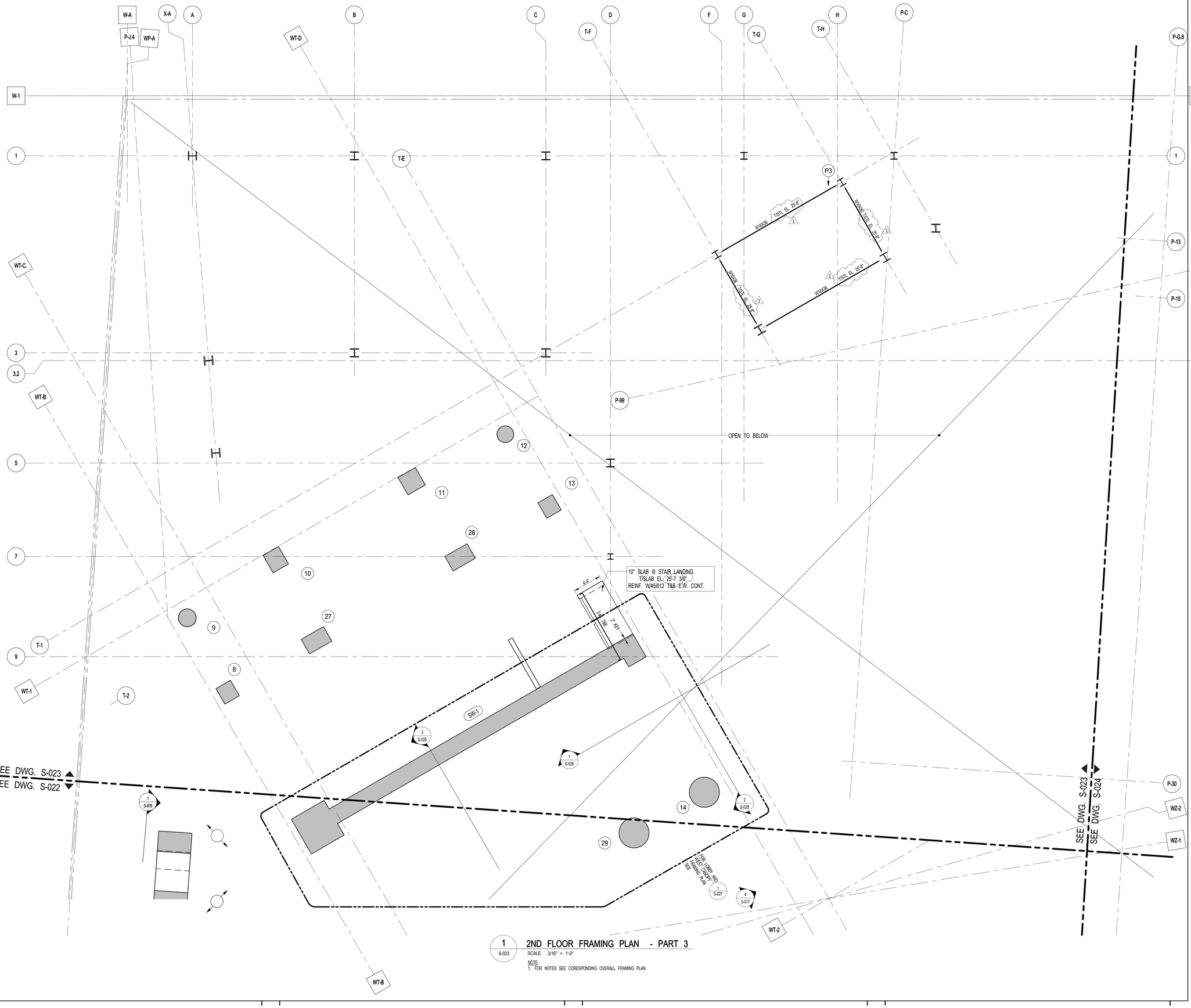

1 S-023 2ND FLOOR FRAMING PLAN - PART 3

SCALE: 3/16" = 1'-0"

NOTE:
1. FOR NOTES SEE CORESPONDING OVERALL FRAMING PLAN

KEY PLAN:

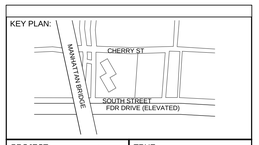

PROJECT NORTH

TRUE NORTH

DEVELOPER:
EXTELL DEVELOPMENT COMPANY
805 Third Ave, 7th Floor
New York, NY 10022
TEL: 212-712-6000 FAX: 212-712-6100

ARCHITECT OF RECORD:
AAI ARCHITECTS, P.C.
14 Wall Street, 2nd Floor
New York, NY 10005
TEL: 212-964-4040 FAX: 212-964-4090

INTERIOR DESIGNER:
MEYER DAVIS
180 Varick St, suite 404
New York, NY 10014
TEL: 212-627-5574

LANDSCAPE DESIGNER:
WEST 8 URBAN DESIGN & LANDSCAPE ARCHITECTURE P.C.
333 Hudson Street, Suite 905
New York, NY 10013
TEL: 212-285-0088 FAX: 212-285-0228

STRUCTURAL ENGINEERS:
WSP
228 East 45th Street
New York, NY 10017
TEL: 212-687-9888 FAX: 646-487-5501

MEP ENGINEERS:
ICOR ASSOCIATES, LLC
485 C Route 1 South, Suite 200
Iseline, NJ 08830
TEL: 908-272-3300 FAX: 908-272-4440

GEOTECHNICAL ENGINEERS:
LANGAN ENGINEERING & ENVIRONMENTAL SERVICES
21 Penn Plaza - 360 West 31st Street, 8th Floor
New York, NY 10001
TEL: 212.479.5400 FAX: 212.479.5444

No.	DESCRIPTION:	DATE:
	DESIGN DEVELOPMENT	10-07-14
	STEEL BID PACKAGE	02-24-15
	CONCRETE BID PACKAGE	03-06-15
	ADDENDUM #3	03-27-15
	50% CONSTRUCTION DOCUMENTS	04-08-15
	ADDENDUM #4	04-24-15
	ADDENDUM #9	07-10-15
	ISSUED FOR FILING	07-28-15
	80% CONSTRUCTION DOCUMENTS	08-14-15
	ASI #55	02-12-16
	ISSUED FOR FILING	03-07-16
	ISSUE FOR CONSTRUCTION	03-18-16
1	ASI #64	05-13-16
	ISSUED FOR FILING	05-22-17

Discrepancies must be reported immediately to the Architect before proceeding. Only figured dimensions are to be used. Contractors must check all dimensions on site. This drawing is protected by copyright.

ALL DIMENSIONS ARE SHOWN IN IMPERIAL.

CONSULTANT:
WSP

PROJECT:
252 SOUTH STREET
NEW YORK, NY

DRAWING TITLE:
2ND FLOOR FRAMING PLAN - PART 3

SEAL & SIGNATURE:
STATE OF NEW YORK · AHMAD RAHIMIAN · No. 065537 · LICENSED PROFESSIONAL ENGINEER

DATE:	09/24/14
PROJECT No:	1302510
DRAWN: CAD	REV:
CHK: CL	
SCALE:	
DWG No:	S-023.03
DOB PAGE No:	of

DOB EMPLOYEE STAMP:
Tina Mathew, RA
APPROVED
Under Directive 2 of 1975
AMENDED APPLICATION
Date: 10/23/2017
NYC Development Hub

DOB B-SCAN:

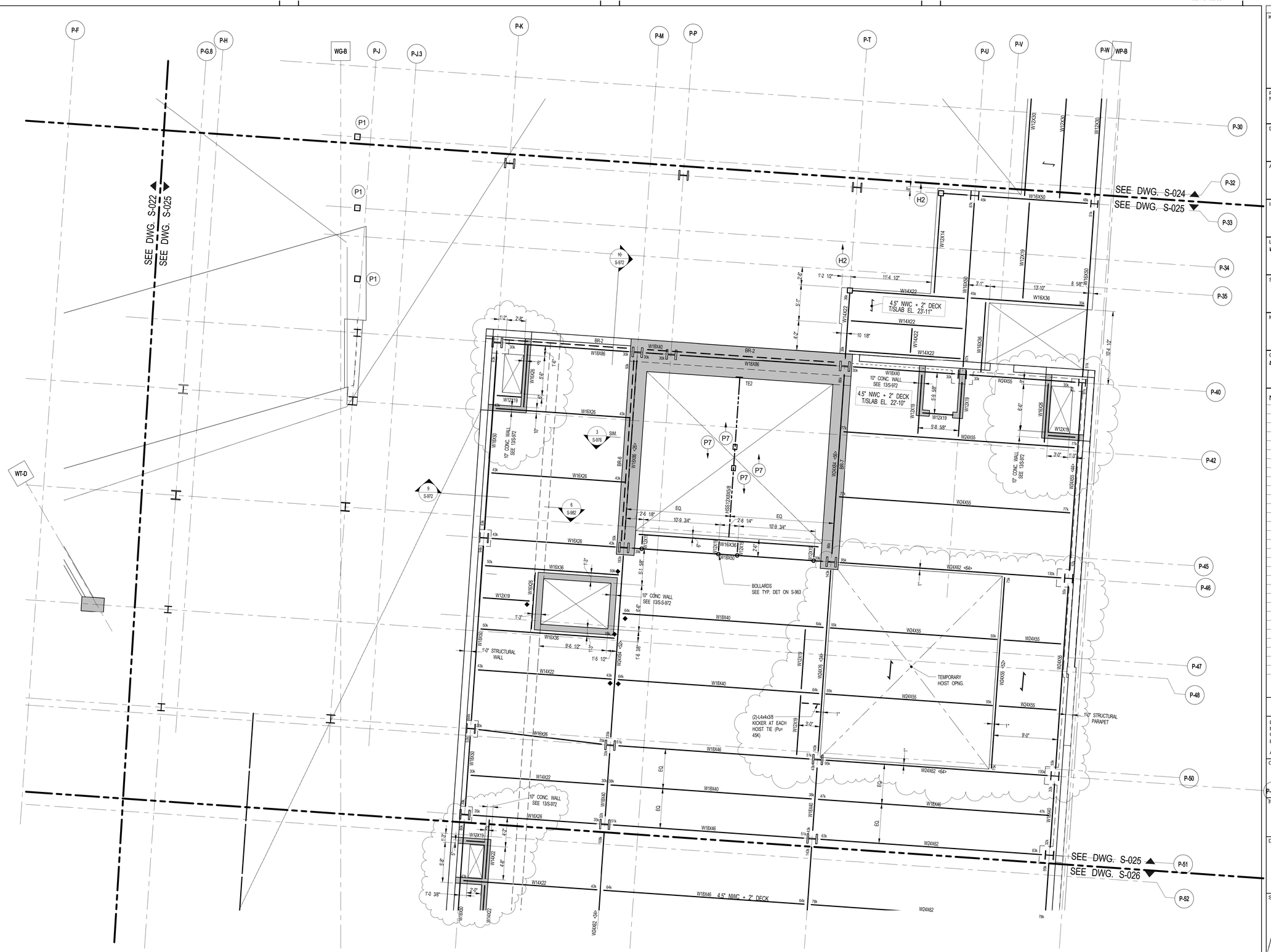

1 S-025 2ND FLOOR FRAMING PLAN - PART 5

SCALE: 3/16" = 1'-0"

NOTE:
1. FOR NOTES SEE CORESPONDING OVERALL FRAMING PLAN

KEY PLAN:

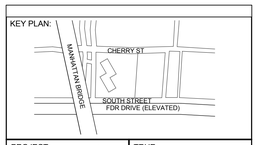

PROJECT NORTH | TRUE NORTH

DEVELOPER:
EXTELL DEVELOPMENT COMPANY
805 Third Ave, 7th Floor
New York, NY 10022
TEL: 212-712-6000 FAX: 212-712-6100

ARCHITECT OF RECORD:
AAI ARCHITECTS, P.C.
14 Wall Street, 2nd Floor
New York, NY 10005
TEL: 212-964-4040 FAX: 212-964-4090

INTERIOR DESIGNER:
MEYER DAVIS
180 Varick St, suite 404
New York, NY 10014
TEL: 212-627-5574

LANDSCAPE DESIGNER:
WEST 8 URBAN DESIGN & LANDSCAPE ARCHITECTURE P.C.
333 Hudson Street, Suite 905
New York, NY 10013
TEL: 212-285-0088 FAX: 212-285-0228

STRUCTURAL ENGINEERS:
WSP
228 East 45th Street
New York, NY 10017
TEL: 212-687-9888 FAX: 646-487-5501

MEP ENGINEERS:
ICOR ASSOCIATES, LLC
485 C Route 1 South, Suite 200
Iseline, NJ 08830
TEL: 908-272-3300 FAX: 908-272-4440

GEOTECHNICAL ENGINEERS:
LANGAN ENGINEERING & ENVIRONMENTAL SERVICES
21 Penn Plaza - 360 West 31st Street, 8th Floor
New York, NY 10001
TEL: 212.479.5400 FAX: 212.479.5444

No.	DESCRIPTION:	DATE:
	DESIGN DEVELOPMENT	10-07-14
	STEEL BID PACKAGE	02-24-15
	ADDENDUM #3	03-27-15
	50% CONSTRUCTION DOCUMENTS	04-08-15
	ADDENDUM #4	04-24-15
	ISSUED FOR FILING	07-28-15
	80% CONSTRUCTION DOCUMENTS	08-14-15
	ASI #13	08-26-15
	90% CONSTRUCTION DOCUMENTS	01-15-16
	ADDENDUM #16	02-04-16
	ASI #55	02-12-16
	ASI #58	03-04-16
	ISSUED FOR FILING	03-07-16
1	ASI #62	04-29-16
2	ASI #63	05-06-16
3	ASI #64	05-13-16
4	ASI #66	06-03-16
	ISSUED FOR FILING	05-22-17

Discrepancies must be reported immediately to the Architect before proceeding. Only figured dimensions are to be used. Contractors must check all dimensions on site. This drawing is protected by copyright.

ALL DIMENSIONS ARE SHOWN IN IMPERIAL.

CONSULTANT: WSP

PROJECT:
252 SOUTH STREET
NEW YORK, NY

DRAWING TITLE:
2ND FLOOR FRAMING PLAN - PART 5

SEAL & SIGNATURE:

STATE OF NEW YORK · AHMAD RAHMAN · No. 065537 · LICENSED PROFESSIONAL ENGINEER

DATE:	09/24/14
PROJECT No:	1302510
DRAWN: CAD	REV:
CHK: CL	
SCALE:	
DWG No:	S-025.03
DOB PAGE No:	of

DOB EMPLOYEE STAMP:

Tina Mathew, RA
APPROVED
Under Directive 2 of 1975
AMENDED APPLICATION
Date: 10/23/2017
NYC Development Hub

DOB B-SCAN:

30" x 42" Arch E1 - SHEET SIZE

FILE NAME:
PLOT DATE:

DEPT OF BLDGS121185539 Job Number
IE597216956R7 Scan Code

30" x 42" Arch E1 - SHEET SIZE

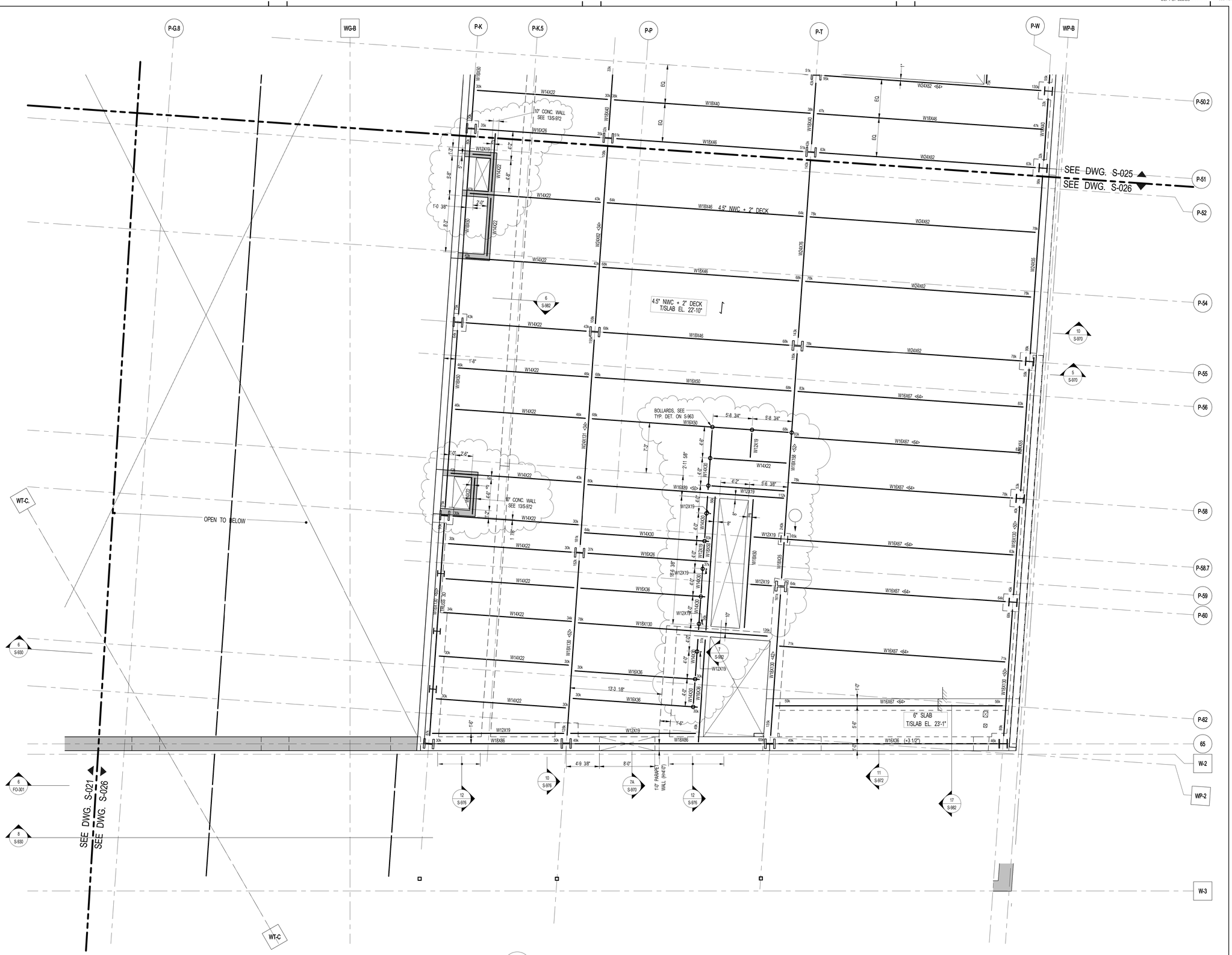

1 S-026 **2ND FLOOR FRAMING PLAN - PART 6**

SCALE: 3/16" = 1'-0"

NOTE:
1. FOR NOTES SEE CORESPONDING OVERALL FRAMING PLAN

KEY PLAN:

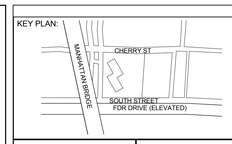

PROJECT NORTH

TRUE NORTH

DEVELOPER:
EXTELL DEVELOPMENT COMPANY
805 Third Ave, 7th Floor
New York, NY 10022
TEL: 212-712-6000 FAX: 212-712-6100

ARCHITECT OF RECORD:
AAI ARCHITECTS, P.C.
14 Wall Street, 2nd Floor
New York, NY 10005
TEL: 212-964-4040 FAX: 212-964-4090

INTERIOR DESIGNER:
MEYER DAVIS
180 Varick St, suite 404
New York, NY 10014
TEL: 212-627-5574

LANDSCAPE DESIGNER:
WEST 8 URBAN DESIGN & LANDSCAPE ARCHITECTURE P.C.
333 Hudson Street, Suite 905
New York, NY 10013
TEL: 212-285-0088 FAX: 212-285-0228

STRUCTURAL ENGINEERS:
WSP
228 East 45th Street
New York, NY 10017
TEL: 212-687-9888 FAX: 646-487-5501

MEP ENGINEERS:
ICOR ASSOCIATES, LLC
485 C Route 1 South, Suite 200
Iselin, NJ 08830
TEL: 908-272-3300 FAX: 908-272-4440

GEOTECHNICAL ENGINEERS:
LANGAN ENGINEERING & ENVIRONMENTAL SERVICES
21 Penn Plaza - 360 West 31st Street, 8th Floor
New York, NY 10001
TEL: 212.479.5400 FAX: 212.479.5444

No.	DESCRIPTION:	DATE:
	DESIGN DEVELOPMENT	10-07-14
	STEEL BID PACKAGE	02-24-15
	ADDENDUM #3	03-27-15
	50% CONSTRUCTION DOCUMENTS	04-08-15
	ADDENDUM #4	04-24-15
	ISSUED FOR FILING	07-28-15
	80% CONSTRUCTION DOCUMENTS	08-14-15
	ASI #13	08-26-15
	ADDENDUM #14	10-22-15
	90% CONSTRUCTION DOCUMENTS	01-15-16
	ADDENDUM #16	02-04-16
	ASI #55	02-12-16
	ISSUED FOR FILING	03-07-16
1	ASI#61	04-22-16
2	ASI #63	05-06-16
3	ASI #66	06-03-16
	ISSUED FOR FILING	05-22-17

Discrepancies must be reported immediately to the Architect before proceeding. Only figured dimensions are to be used. Contractors must check all dimensions on site. This drawing is protected by copyright.

ALL DIMENSIONS ARE SHOWN IN IMPERIAL.

CONSULTANT:
WSP

PROJECT:
252 SOUTH STREET
NEW YORK, NY

DRAWING TITLE:
2ND FLOOR FRAMING PLAN - PART 6

SEAL & SIGNATURE:
STATE OF NEW YORK · AHMAD RAMADAN · No. 085527 · LICENSED PROFESSIONAL ENGINEER

DATE:	09/24/14
PROJECT No:	1302510
DRAWN: CAD	REV:
CHK: CL	
SCALE:	
DWG No:	**S-026.03**
DOB PAGE No:	of

DOB EMPLOYEE STAMP:
Tina Mathew, RA
APPROVED
Under Directive 2 of 1975
AMENDED APPLICATION
Date: 10/23/2017
NYC Development Hub

DOB B-SCAN:

FILE NAME:
PLOT DATE:

DEPT OF BLDGS 121805639 Job Number
ES1179184712 Scan Code
30" x 42" Anti El. SHEET SIZE

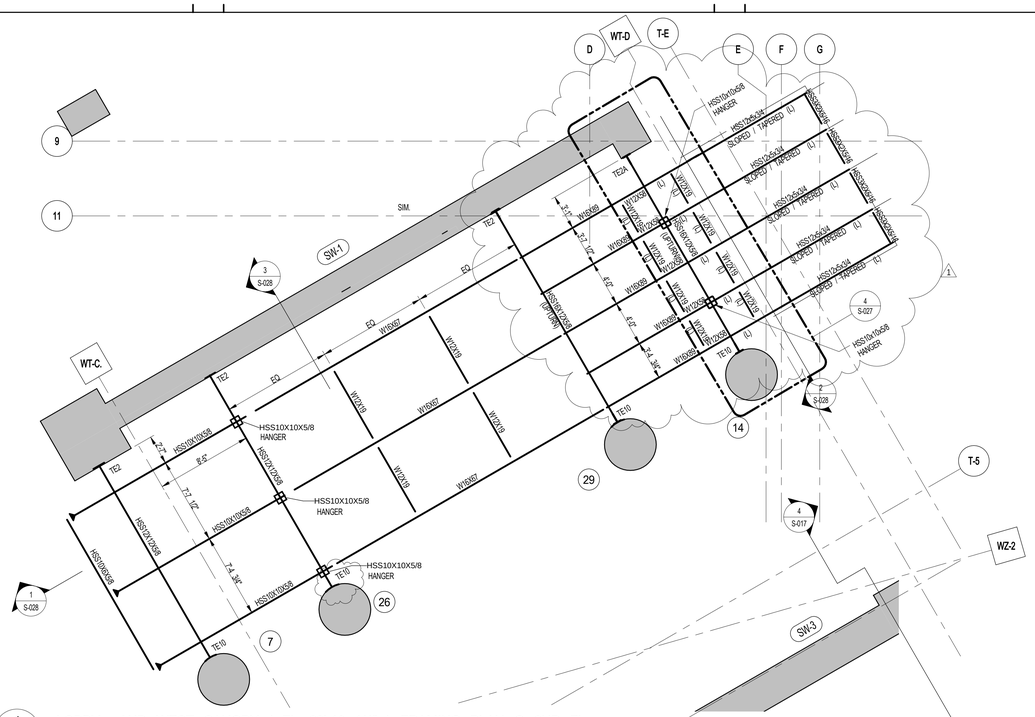

1 S-027 LOBBY AND WEST CANOPY (EL.=29'-10 1/4") FRAMING PLAN @ 2ND FL

SCALE: 3/16" = 1'-0"

NOTE:
1. TOP OF STEEL EL. 29'-10 1/4"U.O.N. ON PLAN AND /OR SECTIONS.
2. TE... INDICATE EMBEDED PLATE . FOR SIZE AND DETAILS SEE DWG. S-963

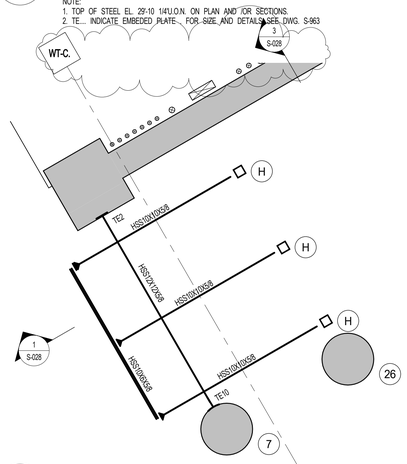

2 S-027 WEST CANOPY (EL. 41'-7") FRAMING PLAN @ 3RD FL

SCALE: 3/16" = 1'-0"

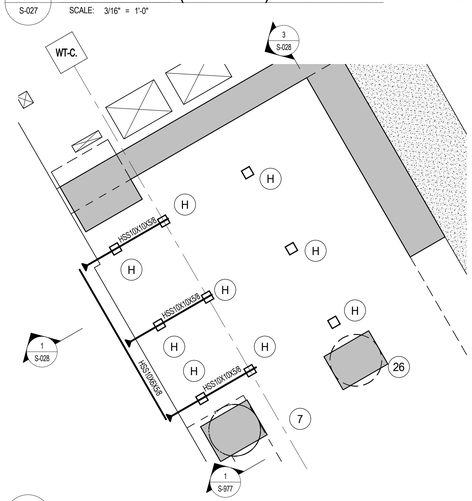

3 S-027 WEST CANOPY (T/STL. EL. 51'-4") FRAMING PLAN @ 4TH FL

SCALE: 3/16" = 1'-0"

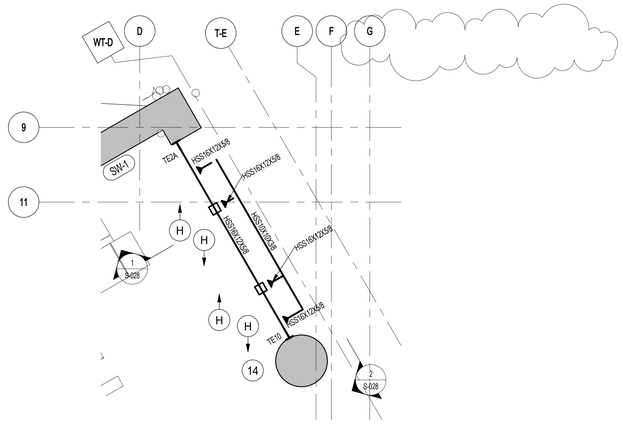

4 S-027 INTERMEDIATE (EL. 40'-1 3/4") LOBBY FRAMING PLAN

SCALE: 3/16" = 1'-0"

NOTE:
1. TOP OF STEEL EL. 40'-1 1/4" 1/4"U.O.N. ON PLAN AND /OR SECTIONS.
2. TE.... INDICATE EMBEDED PLATE . FOR SIZE AND DETAILS SEE DWG. S-963

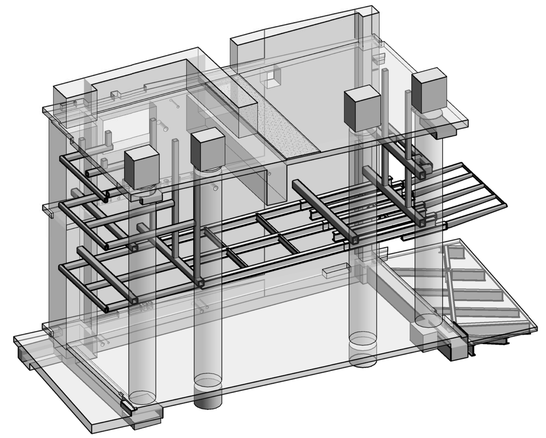

6 S-027 3D VIEW

SCALE:

KEY PLAN:

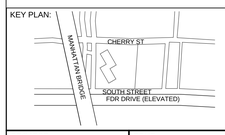

PROJECT NORTH

TRUE NORTH

DEVELOPER:
EXTELL DEVELOPMENT COMPANY
805 Third Ave, 7th Floor
New York, NY 10022
TEL: 212-712-6000 FAX: 212-712-6100

ARCHITECT OF RECORD:
AAI ARCHITECTS, P.C.
14 Wall Street, 2nd Floor
New York, NY 10005
TEL: 212-964-4040 FAX: 212-964-4090

INTERIOR DESIGNER:
MEYER DAVIS
180 Varick St, suite 404
New York, NY 10014
TEL: 212-627-5574

LANDSCAPE DESIGNER:
WEST 8 URBAN DESIGN & LANDSCAPE ARCHITECTURE P.C.
333 Hudson Street, Suite 905
New York, NY 10013
TEL: 212-285-0088 FAX: 212-285-0228

STRUCTURAL ENGINEERS:
WSP
228 East 45th Street
New York, NY 10017
TEL: 212-687-9888 FAX: 646-487-5501

MEP ENGINEERS:
ICOR ASSOCIATES, LLC
485 C Route 1 South, Suite 200
Iseline, NJ 08830
TEL: 908-272-3300 FAX: 908-272-4440

GEOTECHNICAL ENGINEERS:
LANGAN ENGINEERING & ENVIRONMENTAL SERVICES
21 Penn Plaza - 360 West 31st Street, 8th Floor
New York, NY 10001
TEL: 212.479.5400 FAX: 212.479.5444

No.	DESCRIPTION:	DATE:
	ADDENDUM #9	07-10-15
	ISSUED FOR FILING	07-28-15
	80% CONSTRUCTION DOCUMENTS	08-14-15
	ASI #13	08-26-15
	ASI #56	02-19-16
	ASI #58	03-04-16
	ISSUED FOR FILING	03-07-16
	ASI#59	03-11-16
	ISSUE FOR CONSTRUCTION	03-18-16
1	ASI #68	07-01-16
	ISSUED FOR FILING	05-22-17

Discrepancies must be reported immediately to the Architect before proceeding. Only figured dimensions are to be used. Contractors must check all dimensions on site. This drawing is protected by copyright.

ALL DIMENSIONS ARE SHOWN IN IMPERIAL.

CONSULTANT:
WSP

PROJECT:
252 SOUTH STREET
NEW YORK, NY

DRAWING TITLE:
FRAMING PLAN OF CANOPY AT LOBBY EAST

SEAL & SIGNATURE:
STATE OF NEW YORK · AHMAD RAHIMIAN · No. 065652 · LICENSED PROFESSIONAL ENGINEER

DATE:	07/08/15
PROJECT No:	1302510
DRAWN: CAD	REV:
CHK: CL	
SCALE: 3/16" = 1'-0"	
DWG No:	**S-027.02**
DOB PAGE No:	of

DOB EMPLOYEE STAMP:
Tina Mathew, RA
APPROVED
Under Directive 2 of 1975
AMENDED APPLICATION
Date: 10/23/2017
NYC Development Hub

DOB B-SCAN:

FILE NAME:
PLOT DATE:

30" x 42" Arch E1 - SHEET SIZE

DEPT OF BLDGS121305639 Job Number

E1409006843 Scan Code

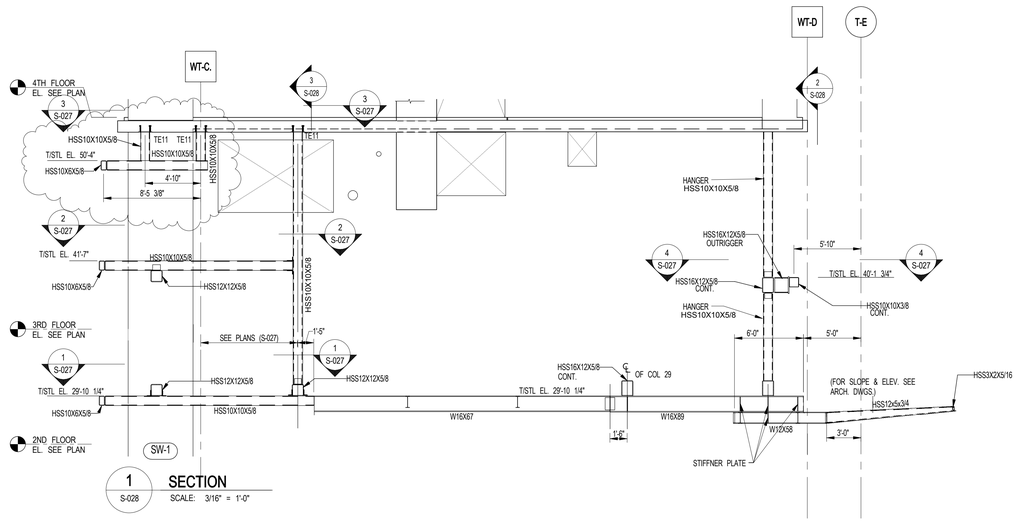

1 / S-028 SECTION
SCALE: 3/16" = 1'-0"

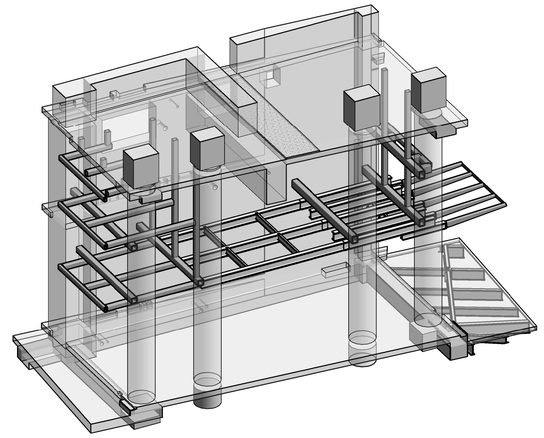

6 / S-028 3D VIEW
SCALE:

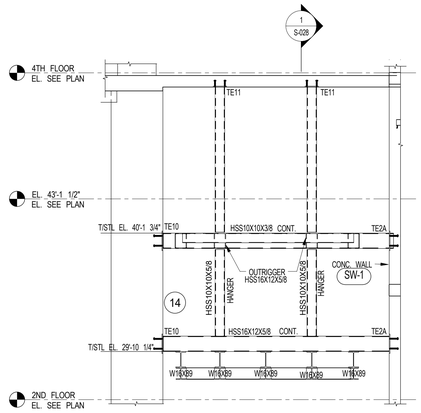

2 / S-028 SECTION
SCALE: 3/16" = 1'-0"

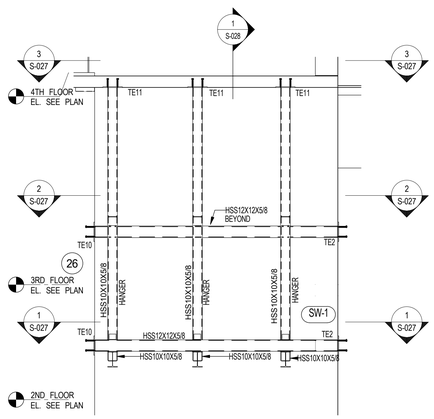

3 / S-028 SECTION
SCALE: 3/16" = 1'-0"

KEY PLAN:

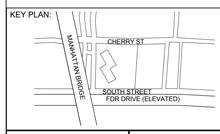

PROJECT NORTH

TRUE NORTH

DEVELOPER:
EXTELL DEVELOPMENT COMPANY
805 Third Ave, 7th Floor
New York, NY 10022
TEL: 212-712-6000 FAX: 212-712-6100

ARCHITECT OF RECORD:
AAI ARCHITECTS, P.C.
14 Wall Street, 2nd Floor
New York, NY 10005
TEL: 212-964-4040 FAX: 212-964-4090

INTERIOR DESIGNER:
MEYER DAVIS
180 Varick St, suite 404
New York, NY 10014
TEL: 212-627-5574

LANDSCAPE DESIGNER:
WEST 8 URBAN DESIGN & LANDSCAPE ARCHITECTURE P.C.
333 Hudson Street, Suite 905
New York, NY 10013
TEL: 212-285-0088 FAX: 212-285-0228

STRUCTURAL ENGINEERS:
WSP
228 East 45th Street
New York, NY 10017
TEL: 212-687-9888 FAX: 646-487-5501

MEP ENGINEERS:
ICOR ASSOCIATES, LLC
485 C Route 1 South, Suite 200
Iseline, NJ 08830
TEL: 908-272-3300 FAX: 908-272-4440

GEOTECHNICAL ENGINEERS:
LANGAN ENGINEERING & ENVIRONMENTAL SERVICES
21 Penn Plaza - 360 West 31st Street, 8th Floor
New York, NY 10001
TEL: 212.479.5400 FAX: 212.479.5444

No.	DESCRIPTION:	DATE:
	ADDENDUM #9	07-10-15
	ISSUED FOR FILING	07-28-15
	80% CONSTRUCTION DOCUMENTS	08-14-15
	ASI #13	08-26-15
	ASI #56	02-19-16
	ASI #58	03-04-16
	ISSUED FOR FILING	03-07-16
	ISSUE FOR CONSTRUCTION	03-18-16
1	ASI #66	06-03-16
2	ASI #68	07-01-16
	ISSUED FOR FILING	05-22-17

Discrepancies must be reported immediately to the Architect before proceeding. Only figured dimensions are to be used. Contractors must check all dimensions on site. This drawing is protected by copyright.

ALL DIMENSIONS ARE SHOWN IN IMPERIAL.

CONSULTANT:
WSP

PROJECT:
252 SOUTH STREET
NEW YORK, NY

DRAWING TITLE:
FRAMING PLAN OF CANOPY AT LOBBY WEST

SEAL & SIGNATURE:

DATE:	07/09/15
PROJECT No:	1302510
DRAWN: CAD	REV:
CHK: CL	
SCALE: 3/16" = 1'-0"	

DWG No:
S-028.02

DOB PAGE No: of

DOB EMPLOYEE STAMP:

DOB B-SCAN:

FILE NAME:
PLOT DATE:

DEPT OF BLDGS121185539 Job Number
E.S#4534161617 Scan Code
30" x 42" Anh E1 - SHEET SIZE

4								
	SIZE		REINFORCEMENT		STIRRUPS			
BEAM MARK	WIDTH	DEPTH	BOTTOM CONTINUOUS	TOP CONTINUOUS	TYPE	SIZE	SPACING	REMARKS
3B1	26	60 /30	4-#11	4-#11	2	#4	@12	#5@4 TYPE 2 STIRRUPS @60" DEEP END ,#5@8 H.E.F. CONT.
3B2	26	30	4-#10	4-#9	2	#4	@12	
3B3	18	30	2-#9	2-#9	1	#4	@12	
3B4	32	30	6-#11	4-#11	2	#4	@12	
3B5	26	59	5-#10	5-#10	2	#4	@12	#4@10 HORIZ. E.F. CONT.
3B6	36	30	4-#11	4-#11	2	#4	@12	6-#5@4 TYPE 2 STIRRUPS @COL12 ,#5@8 H.E.F. CONT.
3B7	24	74	4-#11	2-#11	1	#5	@8	#5@8 H.E.F. CONT.
3B8	30	59	5-#11	6-#10	2	#4	@12	#4@10 HORIZ. E.F. CONT.
3B9	26	30	4-#9	4-#9	2	#4	@12	
3B10	24	70	4-#11	2-#11	1	#5	@8	#5@8 H.E.F. CONT.
3B12	20	36	4-#11	4-#11	2	#4	@8	#4@10 HORIZ. E.F. CONT.
3B13	12	59	2-#11	2-#10	1	#4	@12	#4@10 HORIZ. E.F. CONT.
3B14	24	100	4-#11	2-#11	1	#5	@8	#5@8 H.E.F. CONT.
3B15	36	16	6-#11	4-#9	2	#4	@6	
3B16	18	172						SEE 9/S-978 FOR REINFORCING
3B17	48	30	8-#11	8-#9	3	#5	@10	
3B18	12	24	3-#9	3-#8	1	#4	@8	
3B19	18	18	3-#9	2-#7	1	#4	@8	
3B20	16/12	24	3-#9	3-#8	1	#4	@8	1-#9B & 1-#7 T ADD'L IN 16" WIDE BM.
3B21	16	12	2-#7	2-#7	1	#4	@8	
3B22	6	10/074	1-#7	1-#7	1A	#4	@3 1/2	
3B23	24	74	4-#11	4-#11	1	#5	@8	#5@8 H.E.F. CONT. ,4-#8 TYPE 1 CLOSED STIRRUPS@EACH TE4 CONNECTION REINF. LAYOUT SEE ELEVATION 4/S-840
3MB1	18	48	3-#9	3-#11	1	#4	@12	UPTURNED BM. #4@10 HORIZ. E.F. CONT.

TYPE 1 TYPE 2 TYPE 3

STIRRUP TYPES

CONCRETE NOTES:

1. TOP OF SLAB ELEVATION SEE PLAN
2. SLAB TO BE 12" THICK U.O.N. THUS ▭ ON PLAN.
3. BOTTOM REINFORCEMENT TO BE #5@12 CONT. E.W. FOR 12" SLAB, FOR ADDITIONAL REINFORCEMENT SEE PLAN
4. FOR DETAILS OF THE INTEGRITY REINFORCEMENT SEE DRAWING S-965.
5. FOR BALANCE OF NOTES SEE DRAWING S-010.

3RD FLOOR OVERALL FRAMING PLAN

SCALE: 1/16" = 1'-0"

STEEL NOTES:

1. TOP OF SLAB AT STEEL CONSTRUCTION SHALL BE AS NOTED ON PLAN.
2. SLAB CONSTRUCTION SHALL BE 6" NORMAL WEIGHT CONCRETE ON TOP OF 3" 19GA. (Fy=50 KSI) COMPOSITE GALVANIZED METAL DECK (TOTAL SLAB DEPTH - 9") REINF. WITH #4@12 TOP E.W. + #4 @12 BOTTOM (FLUTE) AND 4 1/2" + 2" DECK SHALL BE 4 1/2" NORMAL WEIGTH CONC. ON 2" 18GA (Fy=50ksi) COMPOSITE GALVANIZED METAL DECK (TOTAL SLAB DEPTH = 6 1/2") REINF. WITH #5@12 TOP E.W. + #5@12 BOTTOM (FLUTE)
3. STUDS SHALL BE 3/4" Ø x 6" LONG. ALL STEEL BEAMS SHALL HAVE MIN 1 STUD/FT. U.O.N. THUS <..> ON PLAN.
4. P=.. K INDICATES AXIAL FORCE,REVERSIBLE IN KIPS.
5. ALL BEAMS DIRECTLY CONNECTING TO COLUMNS/WALLS SHALL BE DESIGNED TO TRANSFER AN AXIAL 'FORCE' (TENSION OR COMPRESSION) OF P = 150kips. AT EACH END U.O.N. ON PLAN IN ADDITION TO ALL OTHER LOADS.
6. FOR TRUSS ELEVATIONS SEE S-930 SERIES DRAWINGS.
7. FOR BALANCE OF NOTES SEE DRAWING S-010.

KEY PLAN:

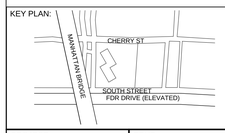

PROJECT NORTH

TRUE NORTH

DEVELOPER:
EXTELL DEVELOPMENT COMPANY
805 Third Ave, 7th Floor
New York, NY 10022
TEL: 212-712-6000 FAX: 212-712-6100

ARCHITECT OF RECORD:
AAI ARCHITECTS, P.C.
14 Wall Street, 2nd Floor
New York, NY 10005
TEL: 212-964-4040 FAX: 212-964-4090

INTERIOR DESIGNER:
MEYER DAVIS
180 Varick St, suite 404
New York, NY 10014
TEL: 212-627-5574

LANDSCAPE DESIGNER:
WEST 8 URBAN DESIGN & LANDSCAPE ARCHITECTURE P.C.
333 Hudson Street, Suite 905
New York, NY 10013
TEL: 212-285-0088 FAX: 212-285-0228

STRUCTURAL ENGINEERS:
WSP
228 East 45th Street
New York, NY 10017
TEL: 212-687-9888 FAX: 646-487-5501

MEP ENGINEERS:
ICOR ASSOCIATES, LLC
485 C Route 1 South, Suite 200
Iseline, NJ 08830
TEL: 908-272-3300 FAX: 908-272-4440

GEOTECHNICAL ENGINEERS:
LANGAN ENGINEERING & ENVIRONMENTAL SERVICES
21 Penn Plaza - 360 West 31st Street, 8th Floor
New York, NY 10001
TEL: 212.479.5400 FAX: 212.479.5444

No.	DESCRIPTION:	DATE:
	50% SD	02-28-14
	100%SD	04-25-14
	50% DD	08-01-14
	DESIGN DEVELOPMENT	10-07-14
	STEEL BID PACKAGE	02-24-15
	CONCRETE BID PACKAGE	03-06-15
	ADDENDUM #3	03-27-15
	50% CONSTRUCTION DOCUMENTS	04-08-15
	ADDENDUM #4	04-24-15
	ADDENDUM #10	07-20-15
	ISSUED FOR FILING	07-28-15
	80% CONSTRUCTION DOCUMENTS	08-14-15
	ASI #13	08-26-15
	ADDENDUM #11	09-25-15
	90% CONSTRUCTION DOCUMENTS	01-15-16
	ADDENDUM #16	02-04-16
	ASI #56	02-19-16
	ASI #57	02-26-16
	ISSUED FOR FILING	03-07-16
	ISSUE FOR CONSTRUCTION	03-18-16
1	ASI #76	10-28-16
	ISSUED FOR FILING	05-22-17

Discrepancies must be reported immediately to the Architect before proceeding. Only figured dimensions are to be used. Contractors must check all dimensions on site. This drawing is protected by copyright.

ALL DIMENSIONS ARE SHOWN IN IMPERIAL.

CONSULTANT:
WSP

PROJECT:
252 SOUTH STREET
NEW YORK, NY

DRAWING TITLE:
3RD FLOOR OVERALL FRAMING PLAN

SEAL & SIGNATURE:
STATE OF NEW YORK · AHMAD RASHIDIAN · No. 085857 · LICENSED PROFESSIONAL ENGINEER

DATE:	02/28/14
PROJECT No:	1302510
DRAWN: CAD	REV:
CHK: CL	
SCALE:	
DWG No:	S-030.03
DOB PAGE No:	of

DOB EMPLOYEE STAMP:
Tina Mathew, RA
APPROVED
Under Directive 2 of 1975
AMENDED APPLICATION
Date: 10/23/2017
NYC Development Hub

DOB B-SCAN:

FILE NAME:
PLOT DATE:

DEPT OF BLDGS121105639 Job Number
E545Q2936522 Scan Code

30" x 42" Arch E1 - SHEET SIZE

1 S-031 — 3RD FLOOR FRAMING PLAN - PART 1
SCALE: 3/16" = 1'-0"
NOTE:
1. FOR NOTES SEE CORESPONDING OVERALL FRAMING PLAN

2 S-031 — 3RD FLOOR MEZZANINE FRAMING PLAN
SCALE: 3/16" = 1'-0"

FILE NAME:
PLOT DATE:

KEY PLAN:
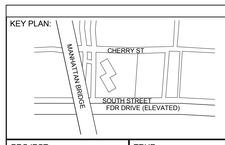

PROJECT NORTH | TRUE NORTH

DEVELOPER:
EXTELL DEVELOPMENT COMPANY
805 Third Ave, 7th Floor
New York, NY 10022
TEL: 212-712-6000 FAX: 212-712-6100

ARCHITECT OF RECORD:
AAI ARCHITECTS, P.C.
14 Wall Street, 2nd Floor
New York, NY 10005
TEL: 212-964-4040 FAX: 212-964-4090

INTERIOR DESIGNER:
MEYER DAVIS
180 Varick St, suite 404
New York, NY 10014
TEL: 212-627-5574

LANDSCAPE DESIGNER:
WEST 8 URBAN DESIGN & LANDSCAPE ARCHITECTURE P.C.
333 Hudson Street, Suite 905
New York, NY 10013
TEL: 212-285-0088 FAX: 212-285-0228

STRUCTURAL ENGINEERS:
WSP
228 East 45th Street
New York, NY 10017
TEL: 212-687-9888 FAX: 646-487-5501

MEP ENGINEERS:
ICOR ASSOCIATES, LLC
485 C Route 1 South, Suite 200
Iseline, NJ 08830
TEL: 908-272-3300 FAX: 908-272-4440

GEOTECHNICAL ENGINEERS:
LANGAN ENGINEERING & ENVIRONMENTAL SERVICES
21 Penn Plaza - 360 West 31st Street, 8th Floor
New York, NY 10001
TEL: 212.479.5400 FAX: 212.479.5444

No.	DESCRIPTION:	DATE:
	DESIGN DEVELOPMENT	10-07-14
	STEEL BID PACKAGE	02-24-15
	CONCRETE BID PACKAGE	03-06-15
	ADDENDUM #3	03-27-15
	50% CONSTRUCTION DOCUMENTS	04-08-15
	ADDENDUM #10	07-20-15
	ISSUED FOR FILING	07-28-15
	80% CONSTRUCTION DOCUMENTS	08-14-15
	ASI #13	08-26-15
	ADDENDUM #11	09-25-15
	90% CONSTRUCTION DOCUMENTS	01-15-16
	ADDENDUM #16	02-04-16
	ASI #56	02-19-16
	ASI #57	02-26-16
	ASI #58	03-04-16
	ISSUED FOR FILING	03-07-16
	ISSUE FOR CONSTRUCTION	03-18-16
1	ASI #62	04-29-16
2	ASI #71	07-29-16
3	ASI #86	03-17-17
	ISSUED FOR FILING	05-22-17

Discrepancies must be reported immediately to the Architect before proceeding. Only figured dimensions are to be used. Contractors must check all dimensions on site. This drawing is protected by copyright.

ALL DIMENSIONS ARE SHOWN IN IMPERIAL.

CONSULTANT:
WSP

PROJECT:
252 SOUTH STREET
NEW YORK, NY

DRAWING TITLE:
3RD FLOOR FRAMING PLAN - PART 1

SEAL & SIGNATURE:
STATE OF NEW YORK — AHMAD RAHIMIAN — No. 085027 — LICENSED PROFESSIONAL ENGINEER

DATE:	09/24/14
PROJECT No:	1302510
DRAWN: CAD	REV:
CHK: CL	
SCALE:	
DWG No:	**S-031.03**
DOB PAGE No:	of

DOB EMPLOYEE STAMP:
Tina Mathew, RA
APPROVED
Under Directive 2 of 1975
AMENDED APPLICATION
Date: 10/23/2017
NYC Development Hub

DOB B-SCAN:

DEPT OF BLDGS121185569 Job Number
ES7595901032 Scan Code

30" x 42" Arch E1 - SHEET SIZE

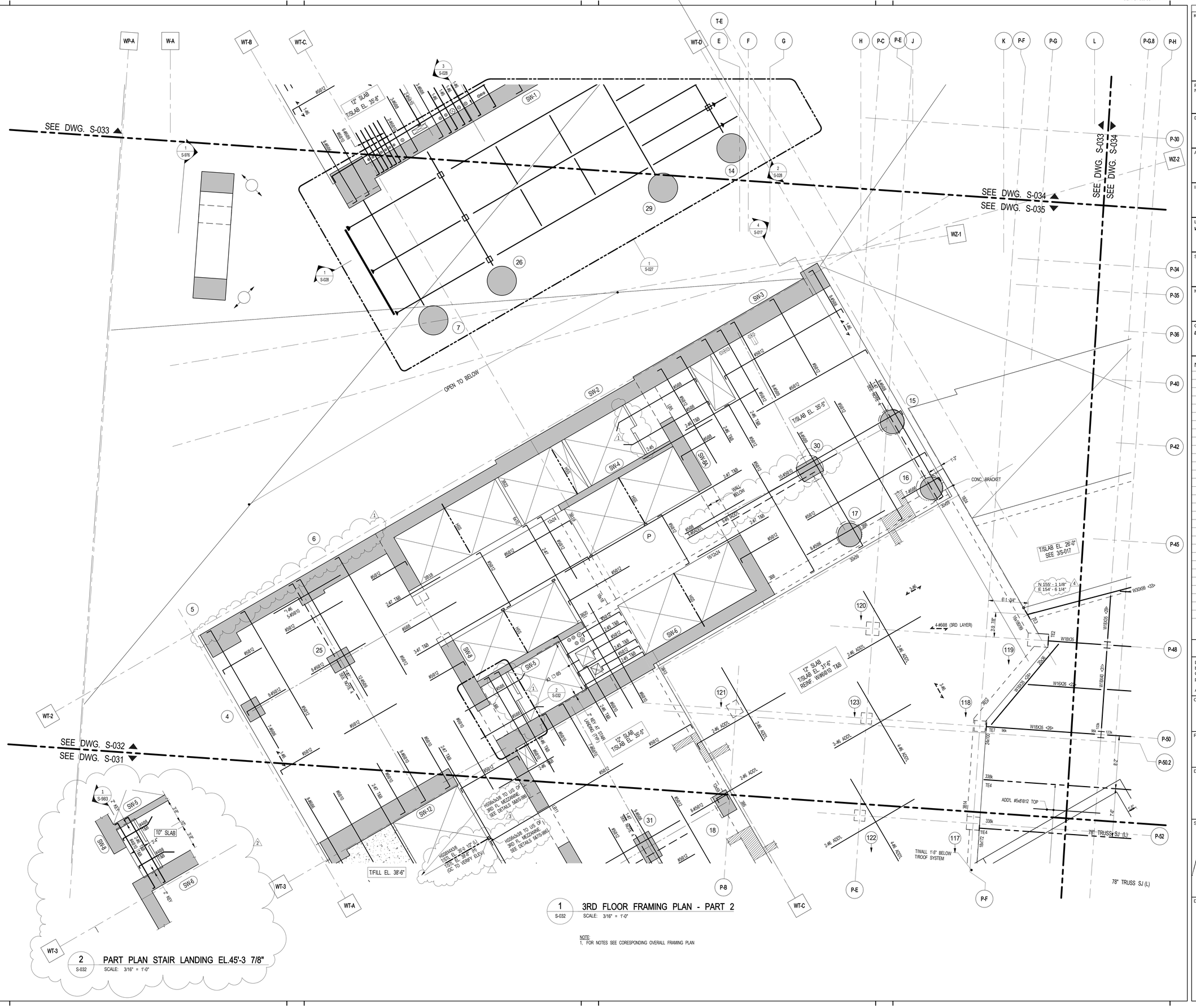

1 S-032 **3RD FLOOR FRAMING PLAN - PART 2**
SCALE: 3/16" = 1'-0"

NOTE:
1. FOR NOTES SEE CORESPONDING OVERALL FRAMING PLAN

2 S-032 **PART PLAN STAIR LANDING EL.45'-3 7/8"**
SCALE: 3/16" = 1'-0"

FILE NAME:
PLOT DATE:

KEY PLAN:

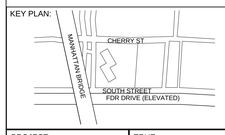

PROJECT NORTH | TRUE NORTH

DEVELOPER:
EXTELL DEVELOPMENT COMPANY
805 Third Ave, 7th Floor
New York, NY 10022
TEL: 212-712-6000 FAX: 212-712-6100

ARCHITECT OF RECORD:
AAI ARCHITECTS, P.C.
14 Wall Street, 2nd Floor
New York, NY 10005
TEL: 212-964-4040 FAX: 212-964-4090

INTERIOR DESIGNER:
MEYER DAVIS
180 Varick St, suite 404
New York, NY 10014
TEL: 212-627-5574

LANDSCAPE DESIGNER:
WEST 8 URBAN DESIGN & LANDSCAPE ARCHITECTURE P.C.
333 Hudson Street, Suite 905
New York, NY 10013
TEL: 212-285-0088 FAX: 212-285-0228

STRUCTURAL ENGINEERS:
WSP
228 East 45th Street
New York, NY 10017
TEL: 212-687-9888 FAX: 646-487-5501

MEP ENGINEERS:
ICOR ASSOCIATES, LLC
485 C Route 1 South, Suite 200
Iseline, NJ 08830
TEL: 908-272-3300 FAX: 908-272-4440

GEOTECHNICAL ENGINEERS:
LANGAN ENGINEERING & ENVIRONMENTAL SERVICES
21 Penn Plaza - 360 West 31st Street, 8th Floor
New York, NY 10001
TEL: 212.479.5400 FAX: 212.479.5444

No.	DESCRIPTION:	DATE:
	DESIGN DEVELOPMENT	10-07-14
	STEEL BID PACKAGE	02-24-15
	CONCRETE BID PACKAGE	03-06-15
	ADDENDUM #3	03-27-15
	50% CONSTRUCTION DOCUMENTS	04-08-15
	ADDENDUM #4	04-24-15
	ADDENDUM #9	07-10-15
	ISSUED FOR FILING	07-28-15
	80% CONSTRUCTION DOCUMENTS	08-14-15
	ASI #13	08-26-15
	ADDENDUM #11	09-25-15
	ADDENDUM #15	11-18-15
	90% CONSTRUCTION DOCUMENTS	01-15-16
	ADDENDUM #16	02-04-16
	ASI #56	02-19-16
	ASI #57	02-26-16
	ISSUED FOR FILING	03-07-16
	ISSUE FOR CONSTRUCTION	03-18-16
1	ASI#61	04-22-16
2	ASI #65	05-20-16
3	ASI #71	07-29-16
4	ASI #88	04-14-17
	ISSUED FOR FILING	05-22-17

Discrepancies must be reported immediately to the Architect before proceeding. Only figured dimensions are to be used. Contractors must check all dimensions on site. This drawing is protected by copyright.

ALL DIMENSIONS ARE SHOWN IN IMPERIAL.

CONSULTANT:
WSP

PROJECT:
252 SOUTH STREET
NEW YORK, NY

DRAWING TITLE:
3RD FLOOR FRAMING PLAN - PART 2

SEAL & SIGNATURE:
STATE OF NEW YORK · AHMAD RAHIMIAN · No. 085527 · LICENSED PROFESSIONAL ENGINEER

DATE: 09/24/14
PROJECT No: 1302510
DRAWN: CAD REV:
CHK: CL
SCALE:
DWG No:
S-032.03
DOB PAGE No: of

DOB EMPLOYEE STAMP:
Tina Mathew, RA
Building
APPROVED
Under Directive 2 of 1975
AMENDED APPLICATION
Date: 10/23/2017
NYC Development Hub

DOB B-SCAN:

DEPT OF BLDGS121185569 Job Number
E526683969 Scan Code
30" x 42" Arch E1 - SHEET SIZE

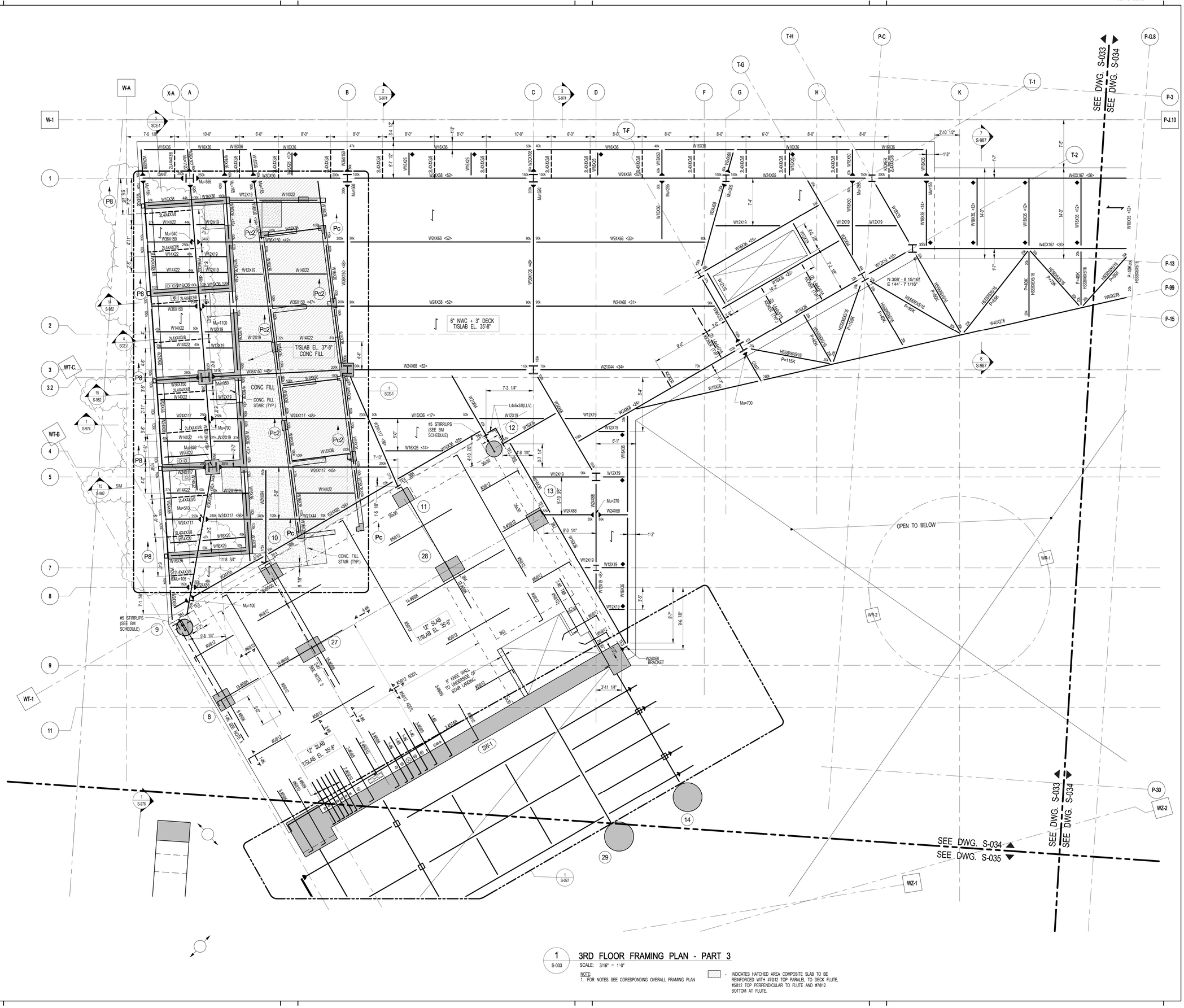

1 S-033 **3RD FLOOR FRAMING PLAN - PART 3**

SCALE: 3/16" = 1'-0"

NOTE:
1. FOR NOTES SEE CORESPONDING OVERALL FRAMING PLAN

, INDICATES HATCHED AREA COMPOSITE SLAB TO BE REINFORCED WITH #7@12 TOP PARALEL TO DECK FLUTE, #5@12 TOP PERPENDICULAR TO FLUTE AND #7@12 BOTTOM AT FLUTE.

KEY PLAN:

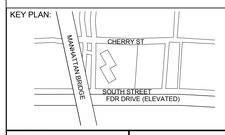

PROJECT NORTH

TRUE NORTH

DEVELOPER:
EXTELL DEVELOPMENT COMPANY
805 Third Ave, 7th Floor
New York, NY 10022
TEL: 212-712-6000 FAX: 212-712-6100

ARCHITECT OF RECORD:
AAI ARCHITECTS, P.C.
14 Wall Street, 2nd Floor
New York, NY 10005
TEL: 212-964-4040 FAX: 212-964-4090

INTERIOR DESIGNER:
MEYER DAVIS
180 Varick St, suite 404
New York, NY 10014
TEL: 212-627-5574

LANDSCAPE DESIGNER:
WEST 8 URBAN DESIGN & LANDSCAPE ARCHITECTURE P.C.
333 Hudson Street, Suite 905
New York, NY 10013
TEL: 212-285-0088 FAX: 212-285-0228

STRUCTURAL ENGINEERS:
WSP
228 East 45th Street
New York, NY 10017
TEL: 212-687-9888 FAX: 646-487-5501

MEP ENGINEERS:
ICOR ASSOCIATES, LLC
485 C Route 1 South, Suite 200
Iseline, NJ 08830
TEL: 908-272-3300 FAX: 908-272-4440

GEOTECHNICAL ENGINEERS:
LANGAN ENGINEERING & ENVIRONMENTAL SERVICES
21 Penn Plaza - 360 West 31st Street, 8th Floor
New York, NY 10001
TEL: 212.479.5400 FAX: 212.479.5444

No.	DESCRIPTION:	DATE:
	DESIGN DEVELOPMENT	10-07-14
	STEEL BID PACKAGE	02-24-15
	CONCRETE BID PACKAGE	03-06-15
	RFI 190 UPDATE	03-17-15
	ADDENDUM #3	03-27-15
	50% CONSTRUCTION DOCUMENTS	04-08-15
	ADDENDUM #4	04-24-15
	ADDENDUM #5	05-01-15
	ADDENDUM #9	07-10-15
	ADDENDUM #10	07-20-15
	ISSUED FOR FILING	07-28-15
	80% CONSTRUCTION DOCUMENTS	08-14-15
	ASI #13	08-26-15
	ADDENDUM #11	09-25-15
	ADDENDUM #14	10-22-15
	ADDENDUM #15	11-18-15
	90% CONSTRUCTION DOCUMENTS	01-15-16
	ADDENDUM #16	02-04-16
	ASI #56	02-19-16
	ASI #57	02-26-16
	ASI #58	03-04-16
	ISSUED FOR FILING	03-07-16
	ASI#59	03-11-16
	ISSUE FOR CONSTRUCTION	03-18-16
1	ASI#61	04-22-16
2	ASI #62	04-29-16
3	ASI #63	05-06-16
4	ASI #74	09-16-16
5	ASI #75	10-10-16
	ISSUED FOR FILING	05-22-17

Discrepancies must be reported immediately to the Architect before proceeding. Only figured dimensions are to be used. Contractors must check all dimensions on site. This drawing is protected by copyright.

ALL DIMENSIONS ARE SHOWN IN IMPERIAL.

CONSULTANT:
WSP

PROJECT:
252 SOUTH STREET
NEW YORK, NY

DRAWING TITLE:
3RD FLOOR FRAMING PLAN - PART 3

SEAL & SIGNATURE:
STATE OF NEW YORK · ANMAD RASHDAN · No. 085857 · LICENSED PROFESSIONAL ENGINEER

DATE:	09/24/14
PROJECT No:	1302510
DRAWN: CAD	REV:
CHK: CL	
SCALE:	
DWG No:	**S-033.03**
DOB PAGE No:	of

DOB EMPLOYEE STAMP:
Tina Mathew, RA
APPROVED
Under Directive 2 of 1975
AMENDED APPLICATION
Date: 10/23/2017
NYC Development Hub

DOB B-SCAN:

FILE NAME:
PLOT DATE:

DEPT OF BLDGS 121185539 Job Number
E 55551836040 Scan Code

30" x 42" Arch E1 - SHEET SIZE

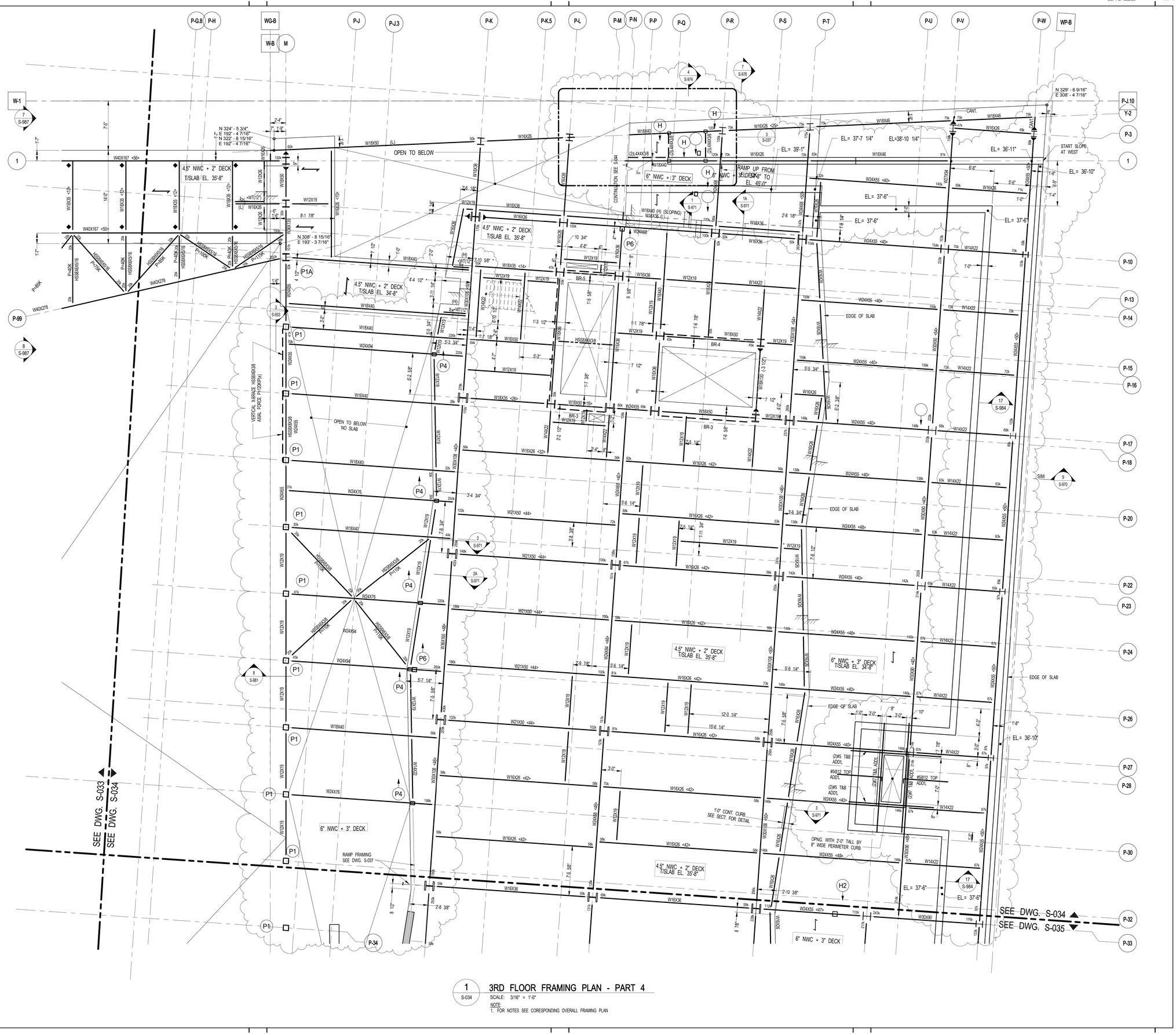

1 S-034 — 3RD FLOOR FRAMING PLAN - PART 4

SCALE: 3/16" = 1'-0"

NOTE:
1. FOR NOTES SEE CORESPONDING OVERALL FRAMING PLAN

FILE NAME:
PLOT DATE:

KEY PLAN:

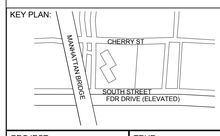

PROJECT NORTH | TRUE NORTH

DEVELOPER:
EXTELL DEVELOPMENT COMPANY
805 Third Ave, 7th Floor
New York, NY 10022
TEL: 212-712-6000 FAX: 212-712-6100

ARCHITECT OF RECORD:
AAI ARCHITECTS, P.C.
14 Wall Street, 2nd Floor
New York, NY 10005
TEL: 212-964-4040 FAX: 212-964-4090

INTERIOR DESIGNER:
MEYER DAVIS
180 Varick St, suite 404
New York, NY 10014
TEL: 212-627-5574

LANDSCAPE DESIGNER:
WEST 8 URBAN DESIGN & LANDSCAPE ARCHITECTURE P.C.
333 Hudson Street, Suite 905
New York, NY 10013
TEL: 212-285-0088 FAX: 212-285-0228

STRUCTURAL ENGINEERS:
WSP
228 East 45th Street
New York, NY 10017
TEL: 212-687-9888 FAX: 646-487-5501

MEP ENGINEERS:
ICOR ASSOCIATES, LLC
485 C Route 1 South, Suite 200
Iseline, NJ 08830
TEL: 908-272-3300 FAX: 908-272-4440

GEOTECHNICAL ENGINEERS:
LANGAN ENGINEERING & ENVIRONMENTAL SERVICES
21 Penn Plaza - 360 West 31st Street, 8th Floor
New York, NY 10001
TEL: 212.479.5400 FAX: 212.479.5444

No.	DESCRIPTION:	DATE:
	DESIGN DEVELOPMENT	10-07-14
	STEEL BID PACKAGE	02-24-15
	ADDENDUM #3	03-27-15
	50% CONSTRUCTION DOCUMENTS	04-08-15
	ADDENDUM #4	04-24-15
	ADDENDUM #5	05-01-15
	ADDENDUM #10	07-20-15
	ISSUED FOR FILING	07-28-15
	80% CONSTRUCTION DOCUMENTS	08-14-15
	ADDENDUM #11	09-25-15
	ADDENDUM #14	10-22-15
	90% CONSTRUCTION DOCUMENTS	01-15-16
	ADDENDUM #16	02-04-16
	ASI #57	02-26-16
	ASI #58	03-04-16
	ISSUED FOR FILING	03-07-16
	ISSUE FOR CONSTRUCTION	03-18-16
1	ASI#61	04-22-16
2	ASI #63	05-06-16
3	ASI #64	05-13-16
4	ASI #67	06-17-16
5	ASI #68	07-01-16
6	ASI #75	10-10-16
	ISSUED FILING	05-22-17

Discrepancies must be reported immediately to the Architect before proceeding. Only figured dimensions are to be used. Contractors must check all dimensions on site. This drawing is protected by copyright.

ALL DIMENSIONS ARE SHOWN IN IMPERIAL.

CONSULTANT:
WSP

PROJECT:
252 SOUTH STREET
NEW YORK, NY

DRAWING TITLE:
3RD FLOOR FRAMING PLAN - PART 4

SEAL & SIGNATURE:
STATE OF NEW YORK — AHMAD RAHIMIAN — No. 085027 — LICENSED PROFESSIONAL ENGINEER

DATE:	09/24/14
PROJECT No:	1302510
DRAWN: CAD	REV:
CHK: CL	
SCALE:	
DWG No:	**S-034.03**
DOB PAGE No:	of

DOB EMPLOYEE STAMP:
Tina Mathew, RA
APPROVED
Under Directive 2 of 1975
AMENDED APPLICATION
Date: 10/23/2017
NYC Development Hub

DOB B-SCAN:

DEPT OF BLDGS 121185528 Job Number

ES816332296 Scan Code

1 S-035 3RD FLOOR FRAMING PLAN - PART 5

SCALE: 3/16" = 1'-0"

NOTE:
1. FOR NOTES SEE CORRESPONDING OVERALL FRAMING PLAN

KEY PLAN:

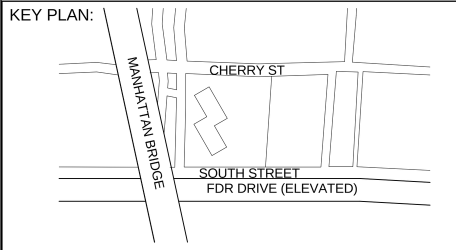

PROJECT NORTH

TRUE NORTH

DEVELOPER:
EXTELL DEVELOPMENT COMPANY
805 Third Ave, 7th Floor
New York, NY 10022
TEL: 212-712-6000 FAX: 212-712-6100

ARCHITECT OF RECORD:
AAI ARCHITECTS, P.C.
14 Wall Street, 2nd Floor
New York, NY 10005
TEL: 212-964-4040 FAX: 212-964-4090

INTERIOR DESIGNER:
MEYER DAVIS
180 Varick St, suite 404
New York, NY 10014
TEL: 212-627-5574

LANDSCAPE DESIGNER:
WEST 8 URBAN DESIGN & LANDSCAPE ARCHITECTURE P.C.
333 Hudson Street, Suite 905
New York, NY 10013
TEL: 212-285-0088 FAX: 212-285-0228

STRUCTURAL ENGINEERS:
WSP
228 East 45th Street
New York, NY 10017
TEL: 212-687-9888 FAX: 646-487-5501

MEP ENGINEERS:
ICOR ASSOCIATES, LLC
485 C Route 1 South, Suite 200
Iseline, NJ 08830
TEL: 908-272-3300 FAX: 908-272-4440

GEOTECHNICAL ENGINEERS:
LANGAN ENGINEERING & ENVIRONMENTAL SERVICES
21 Penn Plaza - 360 West 31st Street, 8th Floor
New York, NY 10001
TEL: 212.479.5400 FAX: 212.479.5444

No.	DESCRIPTION:	DATE:
	DESIGN DEVELOPMENT	10-07-14
	STEEL BID PACKAGE	02-24-15
	ADDENDUM #3	03-27-15
	50% CONSTRUCTION DOCUMENTS	04-08-15
	ADDENDUM #4	04-24-15
	ADDENDUM #5	05-01-15
	ISSUED FOR FILING	07-28-15
	80% CONSTRUCTION DOCUMENTS	08-14-15
	ASI #13	08-26-15
	ADDENDUM #11	09-25-15
	90% CONSTRUCTION DOCUMENTS	01-15-16
	ADDENDUM #16	02-04-16
	ASI #58	03-04-16
	ISSUED FOR FILING	03-07-16
	ISSUE FOR CONSTRUCTION	03-18-16
1	ASI#61	04-22-16
2	ASI #62	04-29-16
3	ASI #63	05-06-16
4	ASI #64	05-13-16
5	ASI #66	06-03-16
6	ASI #68	07-01-16
7	ASI #80	12-09-16
8	ASI #88	04-14-17
9	ISSUED FOR FILING	05-22-17

Discrepancies must be reported immediately to the Architect before proceeding. Only figured dimensions are to be used. Contractors must check all dimensions on site. This drawing is protected by copyright.

ALL DIMENSIONS ARE SHOWN IN IMPERIAL.

CONSULTANT:

WSP

PROJECT:

252 SOUTH STREET
NEW YORK, NY

DRAWING TITLE:

3RD FLOOR FRAMING PLAN - PART 5

SEAL & SIGNATURE:

STATE OF NEW YORK AHMAD RAHIMIAN No. 065537 LICENSED PROFESSIONAL ENGINEER

DATE:	09/24/14
PROJECT No:	1302510
DRAWN:	CAD
CHK:	CL
REV:	
SCALE:	
DWG No:	**S-035.03**
DOB PAGE No:	of

DOB EMPLOYEE STAMP:

Tina Mathew, RA
APPROVED
Under Directive 2 of 1975
AMENDED APPLICATION
Date: 10/23/2017
NYC Development Hub

DOB B-SCAN:

DEPT OF BLDGS121805058 Job Number
E527711541S3 Scan Code

30" x 42" ANSI E1 SHEET SIZE

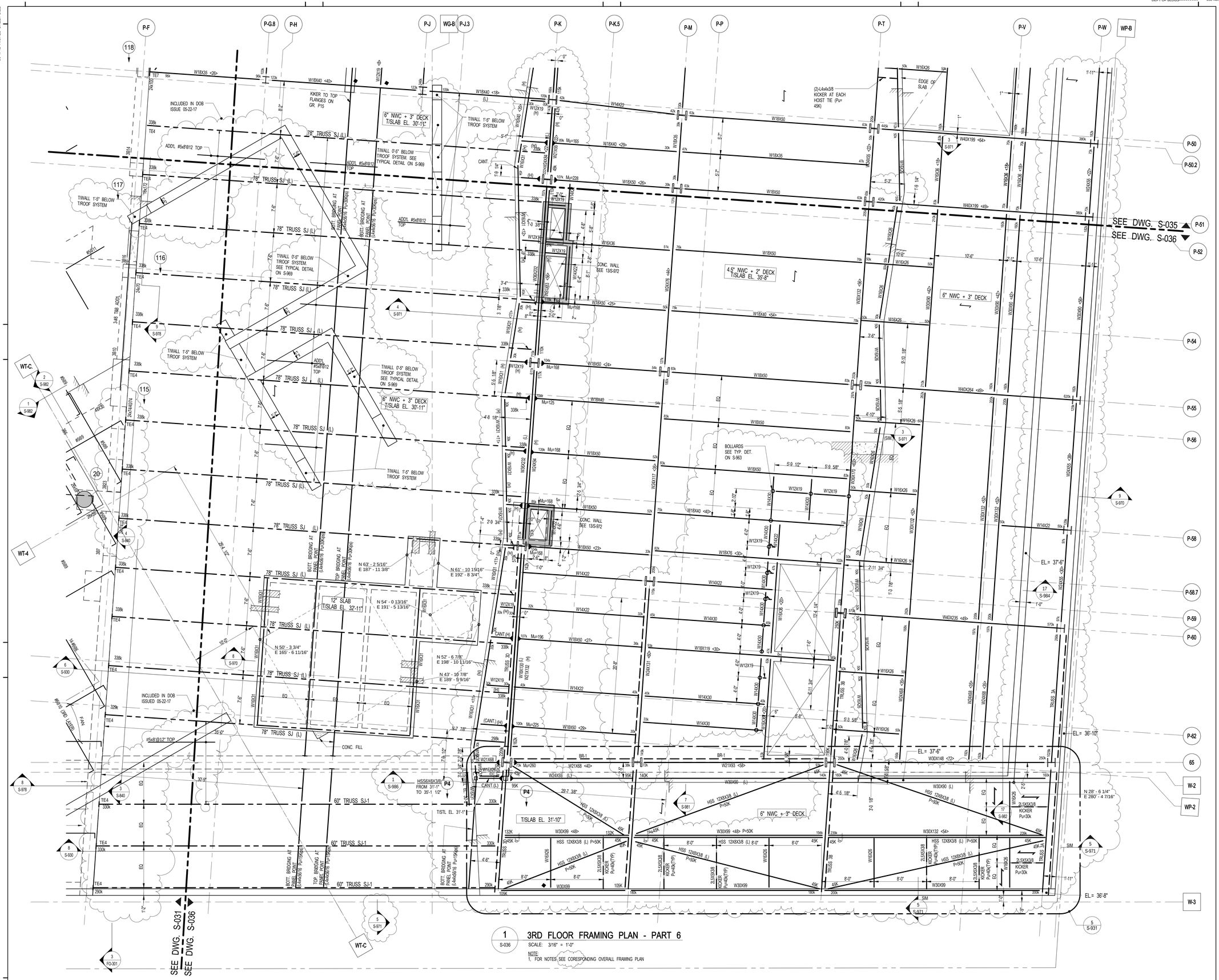

1 S-036 **3RD FLOOR FRAMING PLAN - PART 6**

SCALE: 3/16" = 1'-0"

NOTE:
1. FOR NOTES, SEE CORESPONDING OVERALL FRAMING PLAN

KEY PLAN:

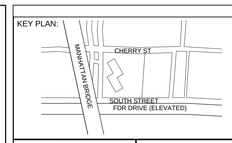

PROJECT NORTH | TRUE NORTH

DEVELOPER:
EXTELL DEVELOPMENT COMPANY
805 Third Ave, 7th Floor
New York, NY 10022
TEL: 212-712-6000 FAX: 212-712-6100

ARCHITECT OF RECORD:
AAI ARCHITECTS, P.C.
14 Wall Street, 2nd Floor
New York, NY 10005
TEL: 212-964-4040 FAX: 212-964-4090

INTERIOR DESIGNER:
MEYER DAVIS
180 Varick St, suite 404
New York, NY 10014
TEL: 212-627-5574

LANDSCAPE DESIGNER:
WEST 8 URBAN DESIGN & LANDSCAPE ARCHITECTURE P.C.
333 Hudson Street, Suite 905
New York, NY 10013
TEL: 212-285-0088 FAX: 212-285-0228

STRUCTURAL ENGINEERS:
WSP
228 East 45th Street
New York, NY 10017
TEL: 212-687-9888 FAX: 646-487-5501

MEP ENGINEERS:
ICOR ASSOCIATES, LLC
485 C Route 1 South, Suite 200
Iseline, NJ 08830
TEL: 908-272-3300 FAX: 908-272-4440

GEOTECHNICAL ENGINEERS:
LANGAN ENGINEERING & ENVIRONMENTAL SERVICES
21 Penn Plaza - 360 West 31st Street, 8th Floor
New York, NY 10001
TEL: 212.479.5400 FAX: 212.479.5444

No.	DESCRIPTION:	DATE:
	DESIGN DEVELOPMENT	10-07-14
	ISSUED FOR COORDINATION	02-05-15
	STEEL BID PACKAGE	02-24-15
	ADDENDUM #3	03-27-15
	50% CONSTRUCTION DOCUMENTS	04-08-15
	ADDENDUM #4	04-24-15
	ADDENDUM #5	05-01-15
	ISSUED FOR FILING	07-28-15
	80% CONSTRUCTION DOCUMENTS	08-14-15
	ASI #13	08-26-15
	90% CONSTRUCTION DOCUMENTS	01-15-16
	ADDENDUM #16	02-04-16
	ASI #58	03-04-16
	ISSUED FOR FILING	03-07-16
	ISSUE FOR CONSTRUCTION	03-18-16
1	ASI #63	05-06-16
2	ASI #64	05-13-16
3	ASI #66	06-03-16
4	ASI #67	06-17-16
5	ASI #68	07-01-16
6	ASI #71	07-29-16
7	ASI #86	03-17-17
8	ISSUED FOR FILING	05-22-17

Discrepancies must be reported immediately to the Architect before proceeding. Only figured dimensions are to be used. Contractors must check all dimensions on site. This drawing is protected by copyright.

ALL DIMENSIONS ARE SHOWN IN IMPERIAL.

CONSULTANT:
WSP

PROJECT:
252 SOUTH STREET
NEW YORK, NY

DRAWING TITLE:
3RD FLOOR FRAMING PLAN - PART 6

SEAL & SIGNATURE:
STATE OF NEW YORK — AHMAD RAHIMIAN — No. 085057 — LICENSED PROFESSIONAL ENGINEER

DATE: 09/24/14
PROJECT No: 1302510
DRAWN: CAD REV:
CHK: CL
SCALE:
DWG No: **S-036.03**
DOB PAGE No: of

DOB EMPLOYEE STAMP:
Tina Mathew, RA
Building Design
APPROVED
Under Directive 2 of 1975
AMENDED APPLICATION
Date: 10/23/2017
NYC Development Hub

DOB B-SCAN:

FILE NAME:
PLOT DATE:

DEPT OF BLDGS 121105538 Job Number
E1315195279 Scan Code
30" x 42" Arch E1 SHEET SIZE

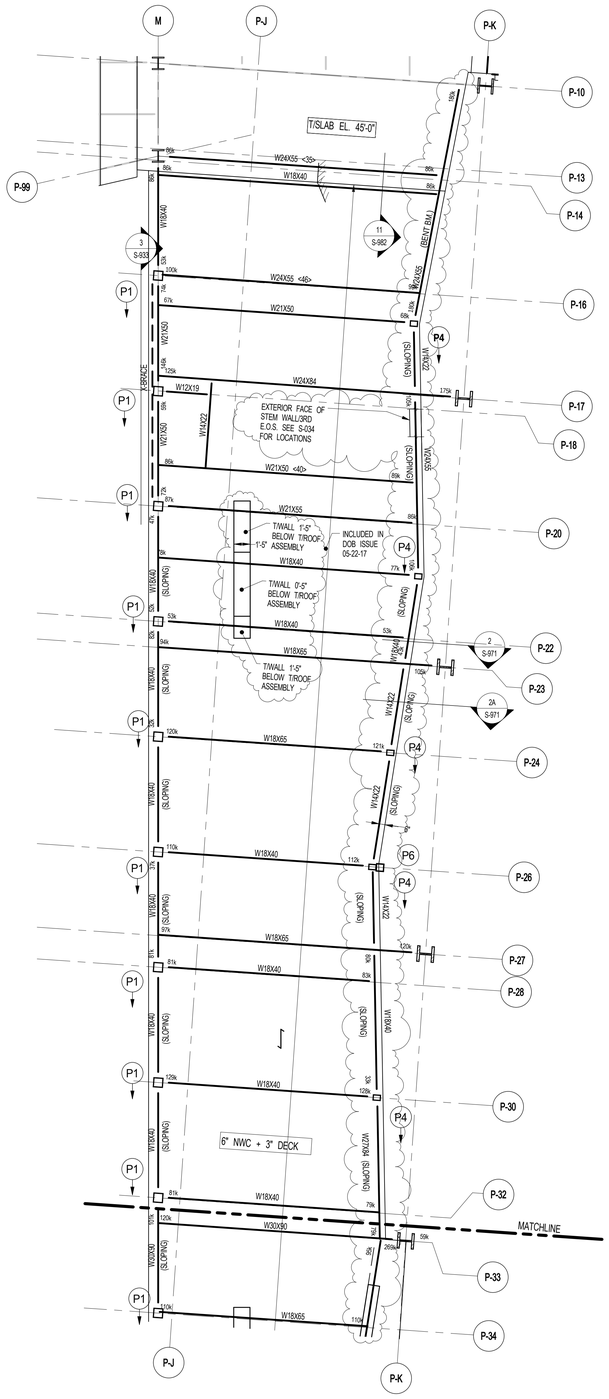

1 S-037 **3RD FLOOR RAMP FRAMING PLAN**
SCALE: 3/16" = 1'-0"

NOTE:
1. FOR NOTES, SEE CORESPONDING OVERALL FRAMING PLAN

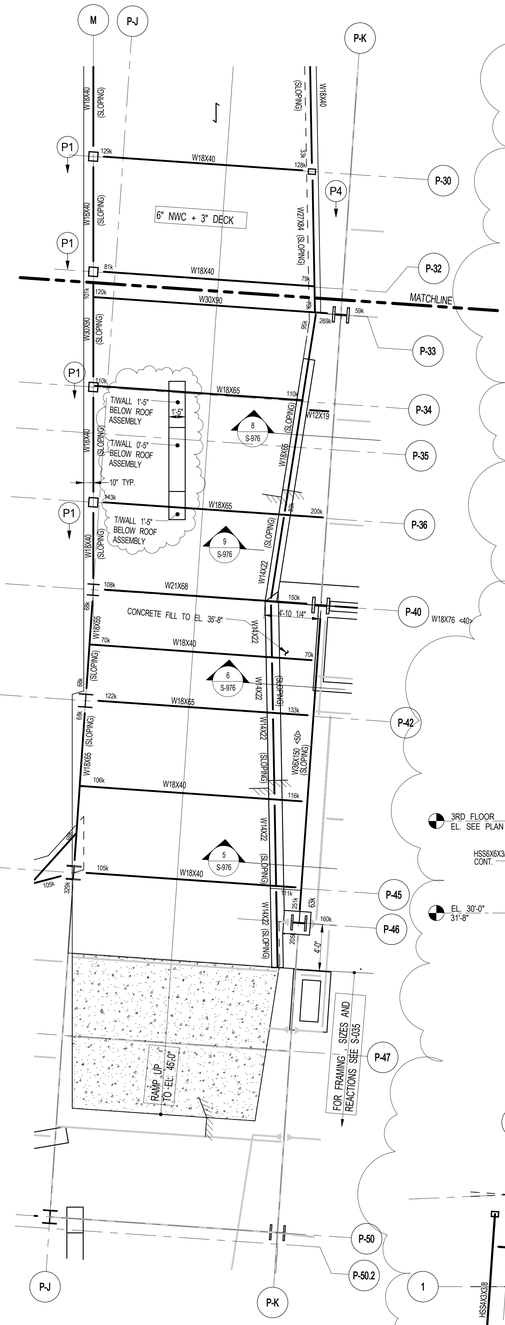

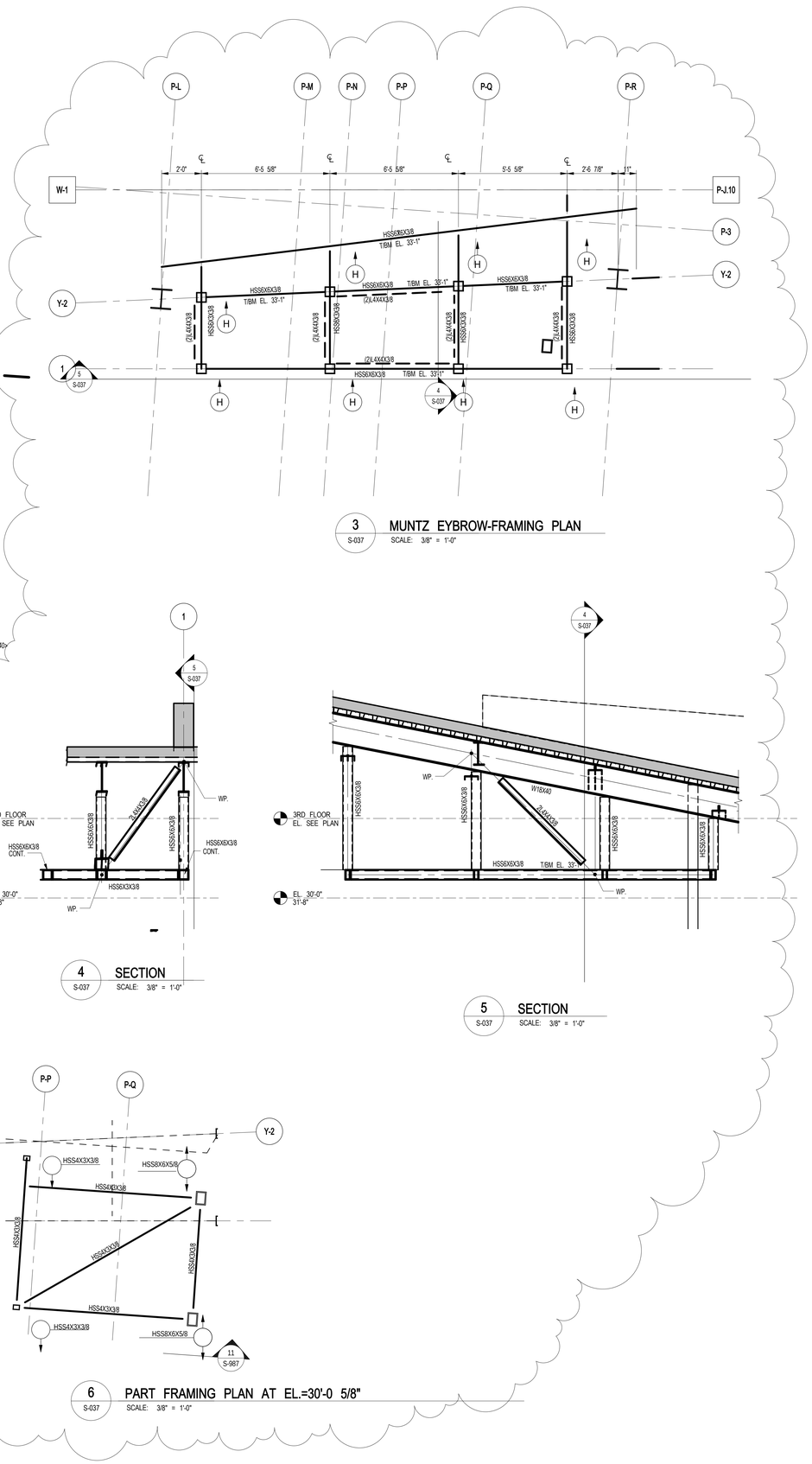

FILE NAME:
PLOT DATE:

KEY PLAN:

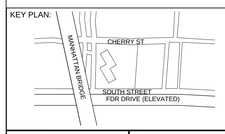

PROJECT NORTH / TRUE NORTH

DEVELOPER:
EXTELL DEVELOPMENT COMPANY
805 Third Ave, 7th Floor
New York, NY 10022
TEL: 212-712-6000 FAX: 212-712-6100

ARCHITECT OF RECORD:
AAI ARCHITECTS, P.C.
14 Wall Street, 2nd Floor
New York, NY 10005
TEL: 212-964-4040 FAX: 212-964-4090

INTERIOR DESIGNER:
MEYER DAVIS
180 Varick St, suite 404
New York, NY 10014
TEL: 212-627-5574

LANDSCAPE DESIGNER:
WEST 8 URBAN DESIGN & LANDSCAPE ARCHITECTURE P.C.
333 Hudson Street, Suite 905
New York, NY 10013
TEL: 212-285-0088 FAX: 212-285-0228

STRUCTURAL ENGINEERS:
WSP
228 East 45th Street
New York, NY 10017
TEL: 212-687-9888 FAX: 646-487-5501

MEP ENGINEERS:
ICOR ASSOCIATES, LLC
485 C Route 1 South, Suite 200
Iselin, NJ 08830
TEL: 908-272-3300 FAX: 908-272-4440

GEOTECHNICAL ENGINEERS:
LANGAN ENGINEERING & ENVIRONMENTAL SERVICES
21 Penn Plaza - 360 West 31st Street, 8th Floor
New York, NY 10001
TEL: 212.479.5400 FAX: 212.479.5444

No.	DESCRIPTION:	DATE:
	STEEL BID PACKAGE	02-24-15
	ADDENDUM #3	03-27-15
	50% CONSTRUCTION DOCUMENTS	04-08-15
	ADDENDUM #4	04-24-15
	ADDENDUM #5	05-01-15
	ISSUED FOR FILING	07-28-15
	80% CONSTRUCTION DOCUMENTS	08-14-15
	ADDENDUM #11	09-25-15
	ADDENDUM #14	10-22-15
	90% CONSTRUCTION DOCUMENTS	01-15-16
	ADDENDUM #16	02-04-16
	ASI #57	02-26-16
	ASI #58	03-04-16
	ISSUED FOR FILING	03-07-16
	ISSUE FOR CONSTRUCTION	03-18-16
1	ASI#61	04-22-16
2	ASI #63	05-06-16
3	ASI #64	05-13-16
4	ASI #75	10-10-16
5	ISSUED FOR FILING	05-22-17

Discrepancies must be reported immediately to the Architect before proceeding. Only figured dimensions are to be used. Contractors must check all dimensions on site. This drawing is protected by copyright.

ALL DIMENSIONS ARE SHOWN IN IMPERIAL.

CONSULTANT:
WSP

PROJECT:
252 SOUTH STREET
NEW YORK, NY

DRAWING TITLE:
3RD FLOOR RAMP PART FRAMING PLAN

SEAL & SIGNATURE:
STATE OF NEW YORK · AHMAD RASTKHAH · No. 085457 · LICENSED PROFESSIONAL ENGINEER

DATE:	02/24/15
PROJECT No:	1302510
DRAWN: CAD	REV:
CHK: CL	
SCALE: As indicated	
DWG No:	**S-037.03**
DOB PAGE No: of	

DOB EMPLOYEE STAMP:
Tina Mathew, RA
APPROVED
Under Directive 2 of 1975
AMENDED APPLICATION
Date: 10/23/2017
NYC Development Hub

DOB B-SCAN:

DEPT OF BLDGS121185528 Job Number
E356991235090 Scan Code

30" x 42" Arch E1 SHEET SIZE

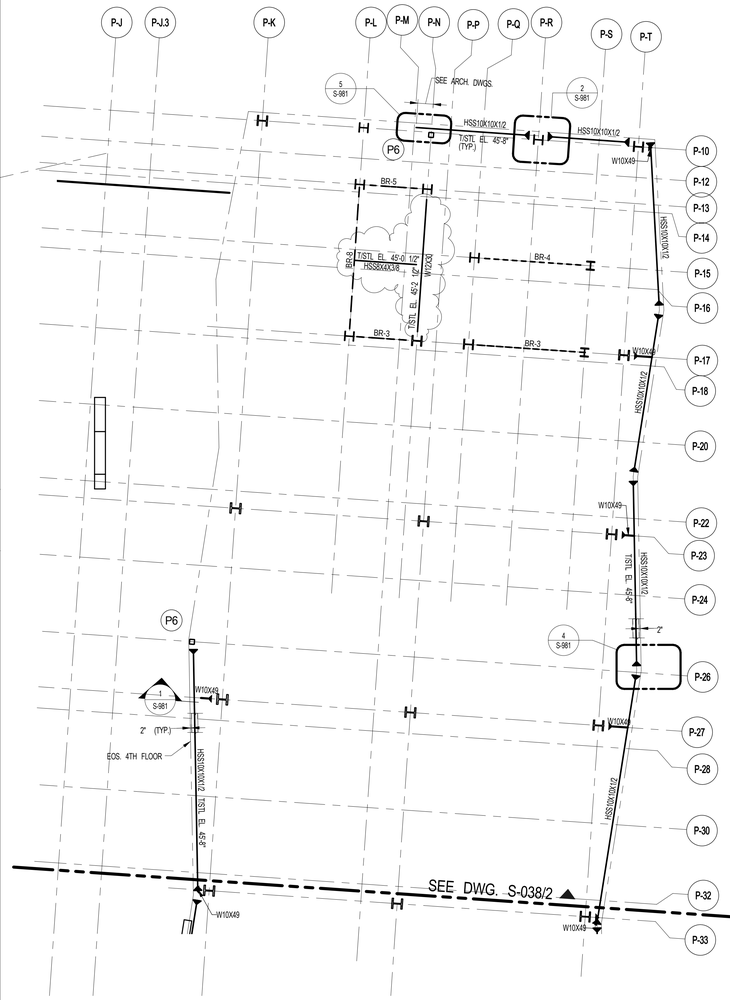

1 S-038 **3RD -INTERMEDIATE STEEL FRAMING PLAN - PART 1**
SCALE: 1/8" = 1'-0"

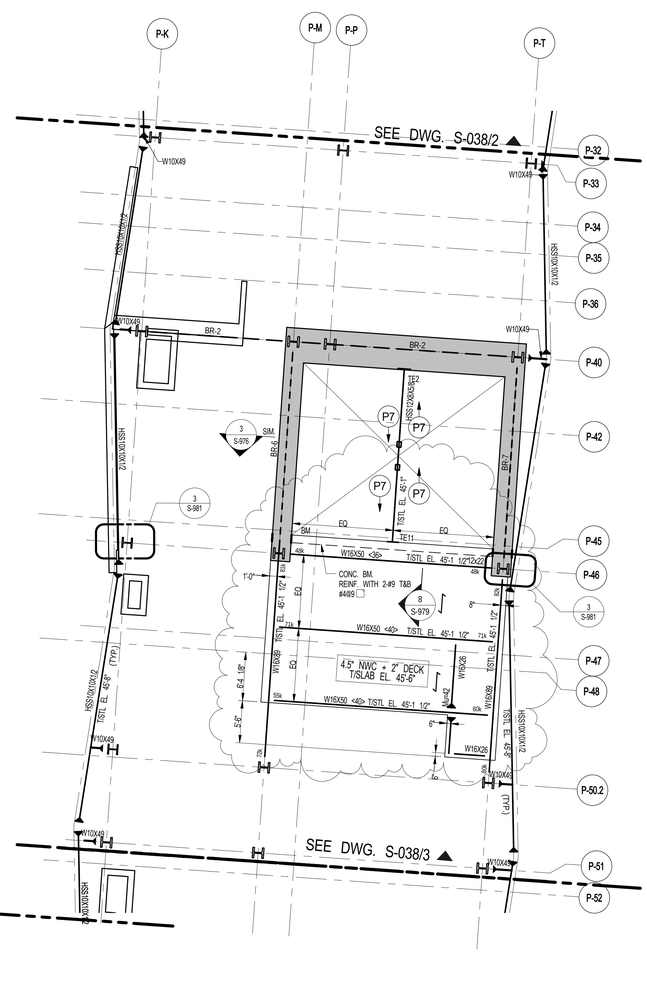

2 S-038 **3RD -INTERMEDIATE STEEL FRAMING PLAN - PART 2**
SCALE: 1/8" = 1'-0"

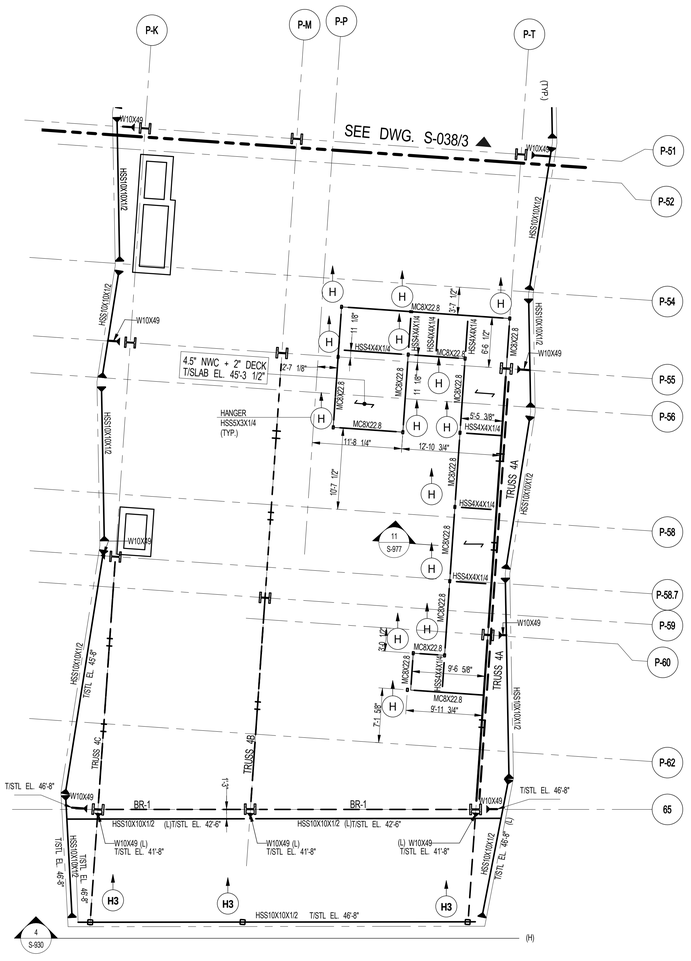

3 S-038 **3RD -INTERMEDIATE STEEL FRAMING PLAN - PART 3**
SCALE: 1/8" = 1'-0"

NOTE:
1, FOR NOTES, SEE CORESPONDING OVERALL FRAMING PLAN

KEY PLAN:

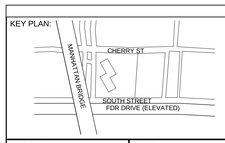

PROJECT NORTH | TRUE NORTH

DEVELOPER:
EXTELL DEVELOPMENT COMPANY
805 Third Ave, 7th Floor
New York, NY 10022
TEL: 212-712-6000 FAX: 212-712-6100

ARCHITECT OF RECORD:
AAI ARCHITECTS, P.C.
14 Wall Street, 2nd Floor
New York, NY 10005
TEL: 212-964-4040 FAX: 212-964-4090

INTERIOR DESIGNER:
MEYER DAVIS
180 Varick St, suite 404
New York, NY 10014
TEL: 212-627-5574

LANDSCAPE DESIGNER:
WEST 8 URBAN DESIGN & LANDSCAPE ARCHITECTURE P.C.
333 Hudson Street, Suite 905
New York, NY 10013
TEL: 212-285-0088 FAX: 212-285-0228

STRUCTURAL ENGINEERS:
WSP
228 East 45th Street
New York, NY 10017
TEL: 212-687-9888 FAX: 646-487-5501

MEP ENGINEERS:
ICOR ASSOCIATES, LLC
485 C Route 1 South, Suite 200
Iseline, NJ 08830
TEL: 908-272-3300 FAX: 908-272-4440

GEOTECHNICAL ENGINEERS:
LANGAN ENGINEERING & ENVIRONMENTAL SERVICES
21 Penn Plaza - 360 West 31st Street, 8th Floor
New York, NY 10001
TEL: 212.479.5400 FAX: 212.479.5444

No.	DESCRIPTION:	DATE:
	STEEL BID PACKAGE	02-24-15
	ADDENDUM #3	03-27-15
	80% CONSTRUCTION DOCUMENTS	08-14-15
	ASI #57	02-26-16
	ASI #58	03-04-16
	ISSUED FOR FILING	03-07-16
	ASI#59	03-11-16
	ISSUE FOR CONSTRUCTION	03-18-16
1	ASI #67	06-17-16
2	ASI #68	07-01-16
3	ASI #80	12-09-16
4	ISSUED FOR FILING	05-22-17

Discrepancies must be reported immediately to the Architect before proceeding. Only figured dimensions are to be used. Contractors must check all dimensions on site. This drawing is protected by copyright.

ALL DIMENSIONS ARE SHOWN IN IMPERIAL.

CONSULTANT:
WSP

PROJECT:
252 SOUTH STREET
NEW YORK, NY

DRAWING TITLE:
PART FRAMING PLAN AT EL.= 45'-4"

SEAL & SIGNATURE:
STATE OF NEW YORK · AMJAD RAMBHOJAN · No. 085552 · LICENSED PROFESSIONAL ENGINEER

DATE:	02/25/15
PROJECT No:	1302510
DRAWN: CAD	REV:
CHK: CL	
SCALE: As indicated	
DWG No:	**S-038.02**
DOB PAGE No: of	

DOB EMPLOYEE STAMP:
Tina Mathew, RA
APPROVED
Under Directive 2 of 1975
AMENDED APPLICATION
Date: 10/23/2017
NYC Development Hub

DOB B-SCAN:

FILE NAME:
PLOT DATE:

DEPT OF BLDGS 121185528 Job Number
ES703836709 Scan Code

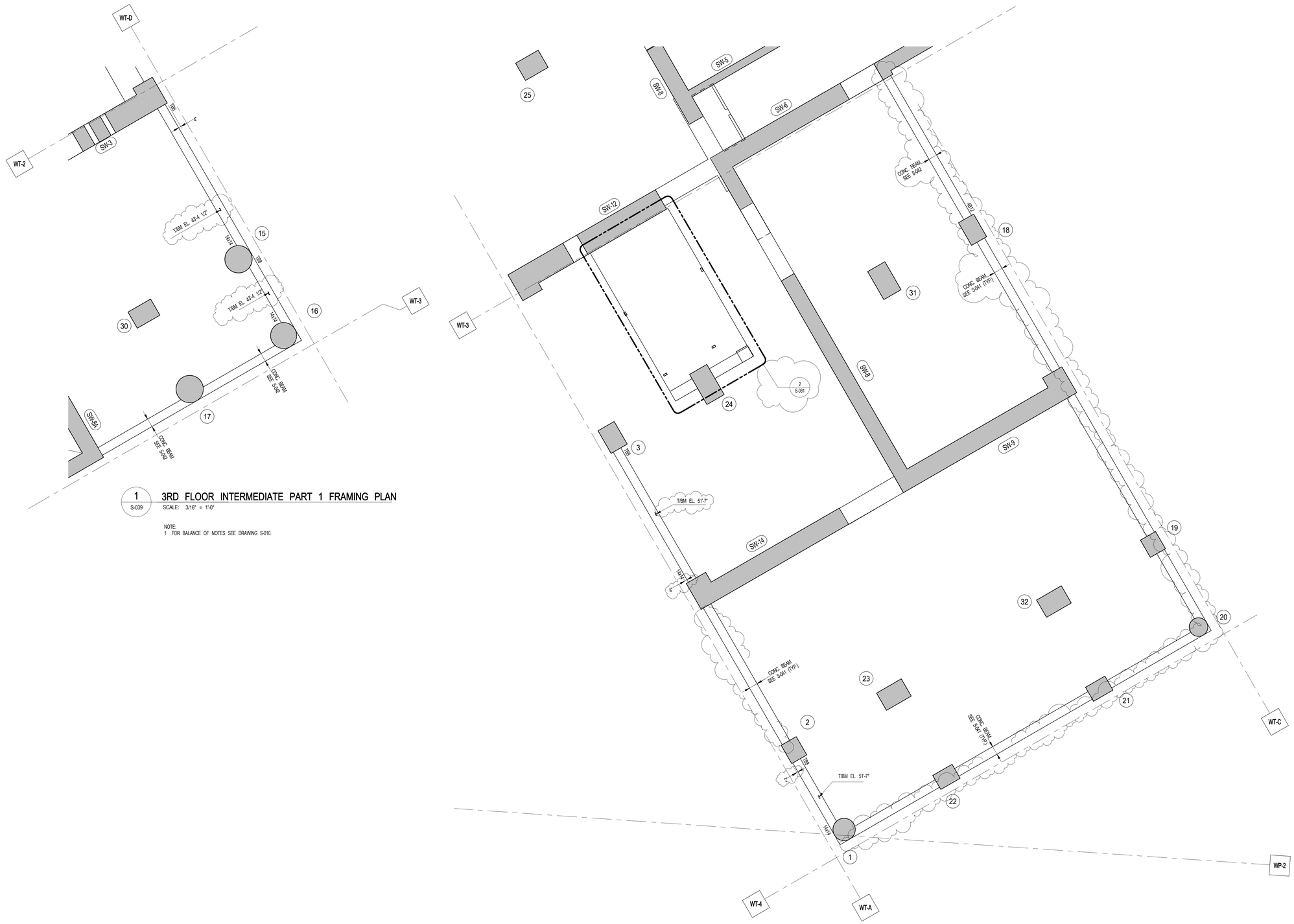

1 S-039 3RD FLOOR INTERMEDIATE PART 1 FRAMING PLAN
SCALE: 3/16" = 1'-0"

NOTE:
1. FOR BALANCE OF NOTES SEE DRAWING S-010.

2 S-039 3RD FLOOR INTERMEDIATE PART 2 FRAMING PLAN
SCALE: 3/16" = 1'-0"

NOTE:
1. FOR BALANCE OF NOTES SEE DRAWING S-010.

KEY PLAN:

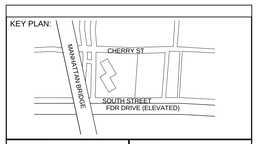

PROJECT NORTH

TRUE NORTH

DEVELOPER:
EXTELL DEVELOPMENT COMPANY
805 Third Ave, 7th Floor
New York, NY 10022
TEL: 212-712-6000 FAX: 212-712-6100

ARCHITECT OF RECORD:
AAI ARCHITECTS, P.C.
14 Wall Street, 2nd Floor
New York, NY 10005
TEL: 212-964-4040 FAX: 212-964-4090

INTERIOR DESIGNER:
MEYER DAVIS
180 Varick St, suite 404
New York, NY 10014
TEL: 212-627-5574

LANDSCAPE DESIGNER:
WEST 8 URBAN DESIGN & LANDSCAPE ARCHITECTURE P.C.
333 Hudson Street, Suite 905
New York, NY 10013
TEL: 212-285-0088 FAX: 212-285-0228

STRUCTURAL ENGINEERS:
WSP
228 East 45th Street
New York, NY 10017
TEL: 212-687-9888 FAX: 646-487-5501

MEP ENGINEERS:
ICOR ASSOCIATES, LLC
485 C Route 1 South, Suite 200
Iseline, NJ 08830
TEL: 908-272-3300 FAX: 908-272-4440

GEOTECHNICAL ENGINEERS:
LANGAN ENGINEERING & ENVIRONMENTAL SERVICES
21 Penn Plaza - 360 West 31st Street, 8th Floor
New York, NY 10001
TEL: 212.479.5400 FAX: 212.479.5444

No.	DESCRIPTION:	DATE:
	90% CONSTRUCTION DOCUMENTS	01-15-16
	ISSUED FOR FILING	03-07-16
	ISSUE FOR CONSTRUCTION	03-18-16
1	ASI #62	04-29-16
2	ISSUED FOR FILING	05-22-17

Discrepancies must be reported immediately to the Architect before proceeding. Only figured dimensions are to be used. Contractors must check all dimensions on site. This drawing is protected by copyright.

ALL DIMENSIONS ARE SHOWN IN IMPERIAL.

CONSULTANT:
WSP

PROJECT:
252 SOUTH STREET
NEW YORK, NY

DRAWING TITLE:
3RD INTERMEDIATE FRAMING PART PLANS

SEAL & SIGNATURE:
STATE OF NEW YORK · AHMAD RAHIMIAN · No. 065557 · LICENSED PROFESSIONAL ENGINEER

DATE:	12/10/15
PROJECT No:	1302510
DRAWN: CAD	REV:
CHK: CL	
SCALE: 3/16" = 1'-0"	
DWG No:	S-039.01
DOB PAGE No:	of

DOB EMPLOYEE STAMP:
Tina Mathew, RA
APPROVED
Under Directive 2 of 1975
AMENDED APPLICATION
Date: 10/23/2017
NYC Development Hub

DOB B-SCAN:

30" x 42" Arch E1 - SHEET SIZE

FILE NAME:
PLOT DATE:

DEPT OF BLDGS121185539 Job Number
E1305300444S Scan Code

30" x 42" Arch E1 SHEET SIZE

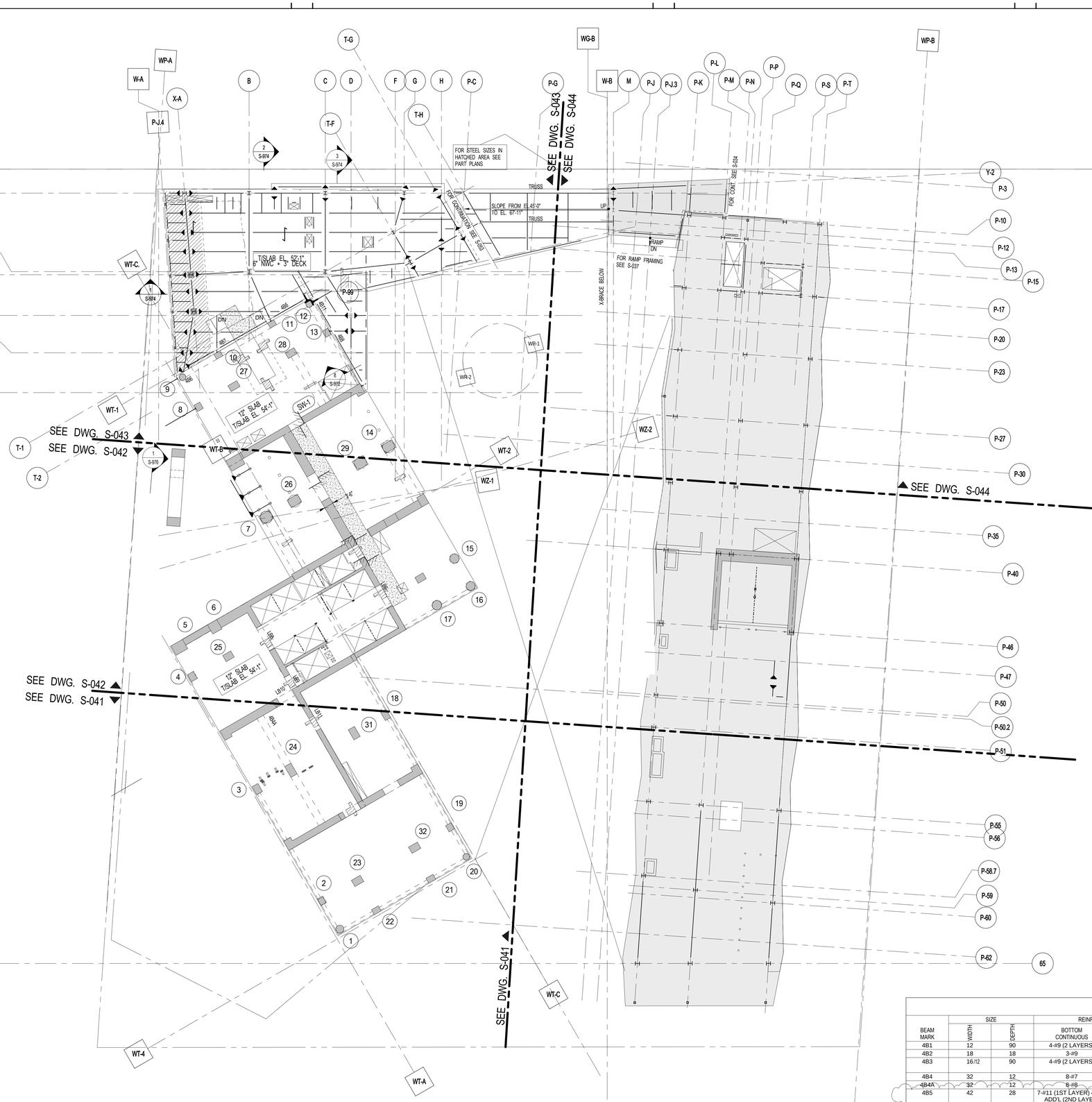

1 S-040 — 4TH FLOOR OVERALL FRAMING PLAN
SCALE: 1/16" = 1'-0"

STEEL NOTES

1. TOP OF SLAB AT STEEL CONSTRUCTION SHALL BE 57'-10" U.O.N. ON PLAN.
2. SLAB CONSTRUCTION SHALL BE 15" NORMAL WEIGHT CONCRETE ON TOP OF 3" COMPOSITE METAL DECK (TOTAL SLAB DEPTH - 18") U.O.N. ON PLAN.
3. STUDS SHALL BE: 3/4" Ø x 8" LONG. FOR 18" COMPOSITE SLAB.
   3/4" Ø x 5" LONG. FOR 9" COMPOSITE SLAB.
   REINF TO BE: #6@12 O.C. T&B E.W. FOR 18" COMPOSITE SLAB
   #5@12 TOP E.W. + #4@12 BOTTOM (FLUTE) FOR 9" COMPOSITE SLAB.
4. ALL BEAMS DIRECTLY CONNECTING TO COLUMNS SHALL BE DESIGNED TO TRANSFER AN AXIAL 'FORCE' (TENSION OR COMPRESSION) OF P = 150kips. BEAMS AT GRID LINE P-K & P-T P = 300kips AT EACH END U.O.N. ON PLAN IN ADDITION TO ALL OTHER LOADS.
5. "X" INDICATES ARCHITECT TO VERIFY PRIOR TO CONSTRUCTION.
6. FOR BALANCE OF NOTES SEE DRAWING S-010.

CONCRETE NOTES:

1. TOP OF SLAB ELEVATION SEE PLAN
2. SLAB TO BE 12" THICK U.O.N. THUS ____ ON PLAN.
3. BOTTOM REINFORCEMENT TO BE #5@12 CONT. E.W. FOR 12" SLAB. FOR ADDITIONAL REINFORCEMENT SEE PLAN
4. FOR DETAILS OF THE INTEGRITY REINFORCEMENT SEE DRAWING S-965.
5. FOR BALANCE OF NOTES SEE DRAWING S-010.

4TH FLOOR BEAM SCHEDULE

BEAM MARK	SIZE WIDTH	SIZE DEPTH	REINFORCEMENT BOTTOM CONTINUOUS	REINFORCEMENT TOP CONTINUOUS	STIRRUPS TYPE	STIRRUPS SIZE	STIRRUPS SPACING	REMARKS
4B1	12	90	4-#9 (2 LAYERS)	4-#9 (2 LAYERS)	1	#4	@12	#4@10 HORIZ. E.F. CONT.
4B2	18	18	3-#9	2-#7	1	#4	@8	
4B3	16/12	90	4-#9 (2 LAYERS)	4-#9 (2 LAYERS)	1	#4	@12	#4@10 HORIZ. E.F. CONT. 1-#9 B & 1-#7 T ADD'L IN 16" WIDE BEAM
4B4	32	12	8-#7	8-#7	2	#4	@5	EXTEND TOP BARS INTO SLAB
4B4A	32	12	8-#8	8-#7	2	#4	@5	EXTEND TOP BARS INTO SLAB
4B5	42	28	7-#11 (1ST LAYER) 4-#11 ADD'L (2ND LAYER)	7-#11	2	#5	@10	2-#8 HORIZ EACH FACE CONT.
4B6	26	62	4-#11	4-#11	2	#4	@12	#5@8 HORIZ EA. FACE CONT.
4B7	26	62/40 62	4-#11	4-#11	2	#4	@12	#5@8 HORIZ EA. FACE CONT.
4B8	12	86	4-#11 (2LAYERS)	2-#11	1	#5	@12	#5@8 HORIZ EA. FACE CONT.
4B9	32	24	4-#11	4-#8	2	#4	@10	
4B10	6	90	2-#8 (2 LAYERS)	2-#8 (2 LAYERS)	1A	#4	@8	#4@8 HORIZ. CONT
4B11	26	86	6-#11	4-#11	2	#4	@12	#5@8 HORIZ EACH. FACE CONT.
4B12	14	41	3-#8	3-#8	1	#4	@12	#4@10 HORIZ E.F. CONT.

TYPE 1A TYPE 1 TYPE 2
STIRRUP TYPES

KEY PLAN:
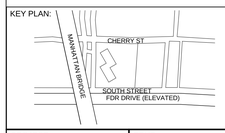

PROJECT NORTH / TRUE NORTH

DEVELOPER:
EXTELL DEVELOPMENT COMPANY
805 Third Ave, 7th Floor
New York, NY 10022
TEL: 212-712-6000 FAX: 212-712-6100

ARCHITECT OF RECORD:
AAI ARCHITECTS, P.C.
14 Wall Street, 2nd Floor
New York, NY 10005
TEL: 212-964-4040 FAX: 212-964-4090

INTERIOR DESIGNER:
MEYER DAVIS
180 Varick St, suite 404
New York, NY 10014
TEL: 212-627-5574

LANDSCAPE DESIGNER:
WEST 8 URBAN DESIGN & LANDSCAPE ARCHITECTURE P.C.
333 Hudson Street, Suite 905
New York, NY 10013
TEL: 212-285-0088 FAX: 212-285-0228

STRUCTURAL ENGINEERS:
WSP
228 East 45th Street
New York, NY 10017
TEL: 212-687-9888 FAX: 646-487-5501

MEP ENGINEERS:
ICOR ASSOCIATES, LLC
485 C Route 1 South, Suite 200
Iseline, NJ 08830
TEL: 908-272-3300 FAX: 908-272-4440

GEOTECHNICAL ENGINEERS:
LANGAN ENGINEERING & ENVIRONMENTAL SERVICES
21 Penn Plaza - 360 West 31st Street, 8th Floor
New York, NY 10001
TEL: 212.479.5400 FAX: 212.479.5444

No.	DESCRIPTION:	DATE:
	50% SD	02-28-14
	100%SD	04-25-14
	50% DD	08-01-14
	DESIGN DEVELOPMENT	10-07-14
	STEEL BID PACKAGE	02-24-15
	CONCRETE BID PACKAGE	03-06-15
	ADDENDUM #3	03-27-15
	50% CONSTRUCTION DOCUMENTS	04-08-15
	ADDENDUM #4	04-24-15
	ADDENDUM #5	05-01-15
	ADDENDUM #10	07-20-15
	ISSUED FOR FILING	07-28-15
	80% CONSTRUCTION DOCUMENTS	08-14-15
	ADDENDUM #16	02-04-16
	ASI #58	03-04-16
	ISSUED FOR FILING	03-07-16
	ISSUE FOR CONSTRUCTION	03-18-16
1	ASI#61	04-22-16
2	ASI #62	04-29-16
3	ISSUED FOR FILING	05-22-17

Discrepancies must be reported immediately to the Architect before proceeding. Only figured dimensions are to be used. Contractors must check all dimensions on site. This drawing is protected by copyright.

ALL DIMENSIONS ARE SHOWN IN IMPERIAL.

CONSULTANT: WSP

PROJECT:
252 SOUTH STREET
NEW YORK, NY

DRAWING TITLE:
4TH FLOOR OVERALL FRAMING PLAN

SEAL & SIGNATURE: STATE OF NEW YORK ARMAD RAMJOHN No. 065052 LICENSED PROFESSIONAL ENGINEER

DATE:	02/24/14
PROJECT No:	1302510
DRAWN: CAD	REV:
CHK: CL	
SCALE:	
DWG No:	**S-040.03**
DOB PAGE No:	of

DOB EMPLOYEE STAMP: Tina Mathew, RA — APPROVED Under Directive 2 of 1975 AMENDED APPLICATION Date: 10/23/2017 NYC Development Hub

DOB B-SCAN:

FILE NAME:
PLOT DATE:

1 S-041 4TH FLOOR FRAMING PLAN - PART 1

SCALE: 3/16" = 1'-0"

NOTE:
1. FOR NOTES SEE CORESPONDING OVERALL FRAMING PLAN

KEY PLAN:

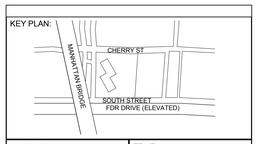

PROJECT NORTH

TRUE NORTH

DEVELOPER:
EXTELL DEVELOPMENT COMPANY
805 Third Ave, 7th Floor
New York, NY 10022
TEL: 212-712-6000 FAX: 212-712-6100

ARCHITECT OF RECORD:
AAI ARCHITECTS, P.C.
14 Wall Street, 2nd Floor
New York, NY 10005
TEL: 212-964-4040 FAX: 212-964-4090

INTERIOR DESIGNER:
MEYER DAVIS
180 Varick St, suite 404
New York, NY 10014
TEL: 212-627-5574

LANDSCAPE DESIGNER:
WEST 8 URBAN DESIGN & LANDSCAPE ARCHITECTURE P.C.
333 Hudson Street, Suite 905
New York, NY 10013
TEL: 212-285-0088 FAX: 212-285-0228

STRUCTURAL ENGINEERS:
WSP
228 East 45th Street
New York, NY 10017
TEL: 212-687-9888 FAX: 646-487-5501

MEP ENGINEERS:
ICOR ASSOCIATES, LLC
485 C Route 1 South, Suite 200
Iseline, NJ 08830
TEL: 908-272-3300 FAX: 908-272-4440

GEOTECHNICAL ENGINEERS:
LANGAN ENGINEERING & ENVIRONMENTAL SERVICES
21 Penn Plaza - 360 West 31st Street, 8th Floor
New York, NY 10001
TEL: 212.479.5400 FAX: 212.479.5444

No.	DESCRIPTION:	DATE:
	DESIGN DEVELOPMENT	10-07-14
	STEEL BID PACKAGE	02-24-15
	CONCRETE BID PACKAGE	03-06-15
	50% CONSTRUCTION DOCUMENTS	04-08-15
	ISSUED FOR FILING	07-28-15
	80% CONSTRUCTION DOCUMENTS	08-14-15
	ADDENDUM #16	02-04-16
	ASI #58	03-04-16
	ISSUED FOR FILING	03-07-16
	ISSUE FOR CONSTRUCTION	03-18-16
1	ASI#61	04-22-16
2	ASI #62	04-29-16
	ISSUED FOR FILING	05-22-17

Discrepancies must be reported immediately to the Architect before proceeding. Only figured dimensions are to be used. Contractors must check all dimensions on site. This drawing is protected by copyright.

ALL DIMENSIONS ARE SHOWN IN IMPERIAL.

CONSULTANT:
WSP

PROJECT:
252 SOUTH STREET
NEW YORK, NY

DRAWING TITLE:
4TH FLOOR FRAMING PLAN - PART 1

SEAL & SIGNATURE:
STATE OF NEW YORK · AHMAD RAHIMIAN · No. 065557 · LICENSED PROFESSIONAL ENGINEER

DATE:	09/24/14
PROJECT No:	1302510
DRAWN: CAD	REV:
CHK: CL	
SCALE:	
DWG No:	S-041.03
DOB PAGE No:	of

DOB EMPLOYEE STAMP:
Tina Mathew, RA
APPROVED
Under Directive 2 of 1975
AMENDED APPLICATION
Date: 10/23/2017
NYC Development Hub

DOB B-SCAN:

FILE NAME:
PLOT DATE:

DEPT OF BLDGS 121805639 Job Number
ES2150457F29 Scan Code

30" x 42" Arch E1 - SHEET SIZE

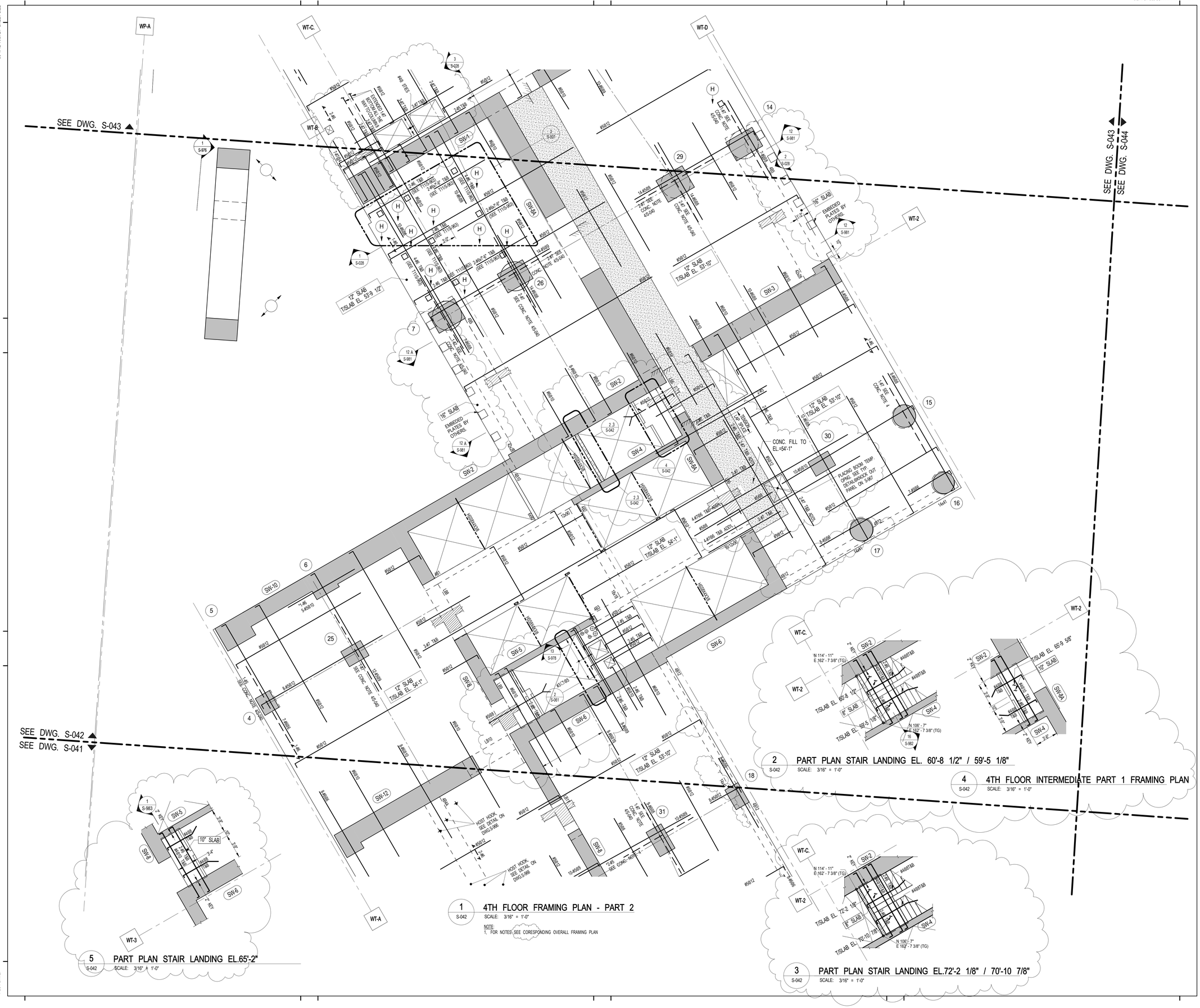

1 S-042 — 4TH FLOOR FRAMING PLAN - PART 2
SCALE: 3/16" = 1'-0"
NOTE:
1, FOR NOTES SEE CORESPONDING OVERALL FRAMING PLAN

2 S-042 — PART PLAN STAIR LANDING EL. 60'-8 1/2" / 59'-5 1/8"
SCALE: 3/16" = 1'-0"

3 S-042 — PART PLAN STAIR LANDING EL.72'-2 1/8" / 70'-10 7/8"
SCALE: 3/16" = 1'-0"

4 S-042 — 4TH FLOOR INTERMEDIATE PART 1 FRAMING PLAN
SCALE: 3/16" = 1'-0"

5 S-042 — PART PLAN STAIR LANDING EL.65'-2"
SCALE: 3/16" = 1'-0"

FILE NAME:
PLOT DATE:

KEY PLAN:
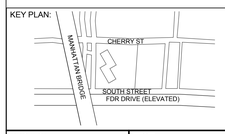

PROJECT NORTH
TRUE NORTH

DEVELOPER:
EXTELL DEVELOPMENT COMPANY
805 Third Ave, 7th Floor
New York, NY 10022
TEL: 212-712-6000 FAX: 212-712-6100

ARCHITECT OF RECORD:
AAI ARCHITECTS, P.C.
14 Wall Street, 2nd Floor
New York, NY 10005
TEL: 212-964-4040 FAX: 212-964-4090

INTERIOR DESIGNER:
MEYER DAVIS
180 Varick St, suite 404
New York, NY 10014
TEL: 212-627-5574

LANDSCAPE DESIGNER:
WEST 8 URBAN DESIGN & LANDSCAPE ARCHITECTURE P.C.
333 Hudson Street, Suite 905
New York, NY 10013
TEL: 212-285-0088 FAX: 212-285-0228

STRUCTURAL ENGINEERS:
WSP
228 East 45th Street
New York, NY 10017
TEL: 212-687-9888 FAX: 646-487-5501

MEP ENGINEERS:
ICOR ASSOCIATES, LLC
485 C Route 1 South, Suite 200
Iseline, NJ 08830
TEL: 908-272-3300 FAX: 908-272-4440

GEOTECHNICAL ENGINEERS:
LANGAN ENGINEERING & ENVIRONMENTAL SERVICES
21 Penn Plaza - 360 West 31st Street, 8th Floor
New York, NY 10001
TEL: 212.479.5400 FAX: 212.479.5444

No.	DESCRIPTION:	DATE:
	DESIGN DEVELOPMENT	10-07-14
	STEEL BID PACKAGE	02-24-15
	CONCRETE BID PACKAGE	03-06-15
	50% CONSTRUCTION DOCUMENTS	04-08-15
	ADDENDUM #5	05-01-15
	ISSUED FOR FILING	07-28-15
	80% CONSTRUCTION DOCUMENTS	08-14-15
	ADDENDUM #16	02-04-16
	ASI #58	03-04-16
	ISSUED FOR FILING	03-07-16
	ISSUE FOR CONSTRUCTION	03-18-16
1	ASI#61	04-22-16
2	ASI #62	04-29-16
3	ASI #64	05-13-16
4	ASI #65	05-20-16
5	ASI #67	06-17-16
6	ISSUED FOR FILING	05-22-17

Discrepancies must be reported immediately to the Architect before proceeding. Only figured dimensions are to be used. Contractors must check all dimensions on site. This drawing is protected by copyright.

ALL DIMENSIONS ARE SHOWN IN IMPERIAL.

CONSULTANT:
WSP

PROJECT:
252 SOUTH STREET
NEW YORK, NY

DRAWING TITLE:
4TH FLOOR FRAMING PLAN - PART 2

SEAL & SIGNATURE:
STATE OF NEW YORK — AHMAD RAHIMIAN — No. 085527 — LICENSED PROFESSIONAL ENGINEER

DATE:	09/24/14
PROJECT No:	1302510
DRAWN: CAD	REV:
CHK: CL	
SCALE:	
DWG No:	**S-042.03**
DOB PAGE No:	of

DOB EMPLOYEE STAMP:
Tina Mathew, RA
Building
APPROVED
Under Directive 2 of 1975
AMENDED APPLICATION
Date: 10/23/2017
NYC Development Hub

DOB B-SCAN:

DEPT OF BLDGS121185538 Job Number
ES1226299665 Scan-Code
30" x 42" Arch E1 - SHEET SIZE

1 S-043 — 4TH FLOOR FRAMING PLAN - PART 3

SCALE: 3/16" = 1'-0"

NOTE:
1. FOR NOTES, SEE CORESPONDING OVERALL FRAMING PLAN

KEY PLAN:

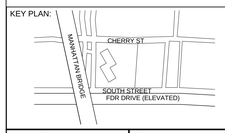

PROJECT NORTH

TRUE NORTH

DEVELOPER:
EXTELL DEVELOPMENT COMPANY
805 Third Ave, 7th Floor
New York, NY 10022
TEL: 212-712-6000 FAX: 212-712-6100

ARCHITECT OF RECORD:
AAI ARCHITECTS, P.C.
14 Wall Street, 2nd Floor
New York, NY 10005
TEL: 212-964-4040 FAX: 212-964-4090

INTERIOR DESIGNER:
MEYER DAVIS
180 Varick St, suite 404
New York, NY 10014
TEL: 212-627-5574

LANDSCAPE DESIGNER:
WEST 8 URBAN DESIGN & LANDSCAPE ARCHITECTURE P.C.
333 Hudson Street, Suite 905
New York, NY 10013
TEL: 212-285-0088 FAX: 212-285-0228

STRUCTURAL ENGINEERS:
WSP
228 East 45th Street
New York, NY 10017
TEL: 212-687-9888 FAX: 646-487-5501

MEP ENGINEERS:
ICOR ASSOCIATES, LLC
485 C Route 1 South, Suite 200
Iseline, NJ 08830
TEL: 908-272-3300 FAX: 908-272-4440

GEOTECHNICAL ENGINEERS:
LANGAN ENGINEERING & ENVIRONMENTAL SERVICES
21 Penn Plaza - 360 West 31st Street, 8th Floor
New York, NY 10001
TEL: 212.479.5400 FAX: 212.479.5444

No.	DESCRIPTION:	DATE:
	DESIGN DEVELOPMENT	10-07-14
	STEEL BID PACKAGE	02-24-15
	CONCRETE BID PACKAGE	03-06-15
	RFI 190 UPDATE	03-17-15
	ADDENDUM #3	03-27-15
	50% CONSTRUCTION DOCUMENTS	04-08-15
	ADDENDUM #4	04-24-15
	ADDENDUM #5	05-01-15
	ADDENDUM #10	07-20-15
	ISSUED FOR FILING	07-28-15
	80% CONSTRUCTION DOCUMENTS	08-14-15
	ADDENDUM #11	09-25-15
	ADDENDUM #14	10-22-15
	ADDENDUM #15	11-18-15
	ADDENDUM #16	02-04-16
	ASI #55	02-12-16
	ASI #58	03-04-16
	ISSUED FOR FILING	03-07-16
	ASI#59	03-11-16
	ISSUE FOR CONSTRUCTION	03-18-16
1	ASI #62	04-29-16
2	ASI #63	05-06-16
3	ASI #64	05-13-16
4	ASI #67	06-17-16
5	ASI #74	09-16-16
6	ASI #75	10-10-16
7	ASI #81	12-22-16
8	ISSUED FOR FILING	05-22-17

Discrepancies must be reported immediately to the Architect before proceeding. Only figured dimensions are to be used. Contractors must check all dimensions on site. This drawing is protected by copyright.

ALL DIMENSIONS ARE SHOWN IN IMPERIAL.

CONSULTANT:
WSP

PROJECT:
252 SOUTH STREET
NEW YORK, NY

DRAWING TITLE:
4TH FLOOR FRAMING PLAN - PART 3

SEAL & SIGNATURE:
STATE OF NEW YORK — AHMAD RASTEGAR — No. 085857 — LICENSED PROFESSIONAL ENGINEER

DATE: 09/24/14
PROJECT No: 1302510
DRAWN: CAD REV:
CHK: CL
SCALE:
DWG No: **S-043.03**
DOB PAGE No: of

DOB EMPLOYEE STAMP:
Tina Mathew, RA
APPROVED
Under Directive 1 of 1975
AMENDED APPLICATION
Date: 10/23/2017
NYC Development Hub

DOB B-SCAN:

FILE NAME:
PLOT DATE:

DEPT OF BLDGS 121185528 Job Number
ES574300520 Scan Code

30" x 42" Arch E1 - SHEET SIZE

1 4TH FLOOR FRAMING PLAN - PART 4

S-044

SCALE: 3/16" = 1'-0"

NOTES:

1. FOR BALANCE OF INFORMATION SEE CORRESPONDING OVERALL FRAMING PLAN..
2. SEE TYPICAL DETAIL ON S-962 FOR SHEAR WALL POSTS / INTERIOR BEARING WALL.
3. FOR LOCATIONS OF SHEARWALL POSTS / BEARING WALL POSTS REFER TO S-201 THRU S-204 BY SPECIALTY ENGINEERS.(DATED 01.30.2015)
4. W-BEAM TOP & BOTTOM FLANGE TO BE CUT 6" WIDE.

FILE NAME:
PLOT DATE:

KEY PLAN:

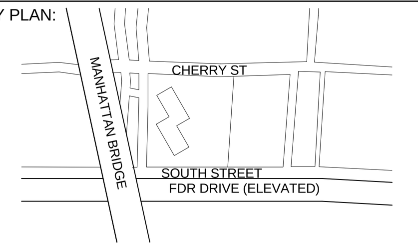

PROJECT NORTH

TRUE NORTH

DEVELOPER:
EXTELL DEVELOPMENT COMPANY
805 Third Ave, 7th Floor
New York, NY 10022
TEL: 212-712-6000 FAX: 212-712-6100

ARCHITECT OF RECORD:
AAI ARCHITECTS, P.C.
14 Wall Street, 2nd Floor
New York, NY 10005
TEL: 212-964-4040 FAX: 212-964-4090

INTERIOR DESIGNER:
MEYER DAVIS
180 Varick St, suite 404
New York, NY 10014
TEL: 212-627-5574

LANDSCAPE DESIGNER:
WEST 8 URBAN DESIGN & LANDSCAPE ARCHITECTURE P.C.
333 Hudson Street, Suite 905
New York, NY 10013
TEL: 212-285-0088 FAX: 212-285-0228

STRUCTURAL ENGINEERS:
WSP
228 East 45th Street
New York, NY 10017
TEL: 212-687-9888 FAX: 646-487-5501

MEP ENGINEERS:
ICOR ASSOCIATES, LLC
485 C Route 1 South, Suite 200
Iseline, NJ 08830
TEL: 908-272-3300 FAX: 908-272-4440

GEOTECHNICAL ENGINEERS:
LANGAN ENGINEERING & ENVIRONMENTAL SERVICES
21 Penn Plaza - 360 West 31st Street, 8th Floor
New York, NY 10001
TEL: 212.479.5400 FAX: 212.479.5444

No.	DESCRIPTION:	DATE:
	DESIGN DEVELOPMENT	10-07-14
	STEEL BID PACKAGE	02-24-15
	ADDENDUM #3	03-27-15
	50% CONSTRUCTION DOCUMENTS	04-08-15
	ADDENDUM #4	04-24-15
	ADDENDUM #10	07-20-15
	ISSUED FOR FILING	07-28-15
	80% CONSTRUCTION DOCUMENTS	08-14-15
	ASI #13	08-26-15
	ADDENDUM #14	10-22-15
	90% CONSTRUCTION DOCUMENTS	01-15-16
	ADDENDUM #16	02-04-16
	ASI #56	02-19-16
	ASI #57	02-26-16
	ASI #58	03-04-16
	ISSUED FOR FILING	03-07-16
	ISSUE FOR CONSTRUCTION	03-18-16
1	ASI#61	04-22-16
2	ASI #62	04-29-16
3	ISSUED FOR FILING	05-22-17

Discrepancies must be reported immediately to the Architect before proceeding. Only figured dimensions are to be used. Contractors must check all dimensions on site. This drawing is protected by copyright.

ALL DIMENSIONS ARE SHOWN IN IMPERIAL.

CONSULTANT:

WSP

PROJECT:

252 SOUTH STREET
NEW YORK, NY

DRAWING TITLE:

4TH FLOOR FRAMING PLAN - PART 4

SEAL & SIGNATURE:

STATE OF NEW YORK
AHMAD RAHIMIAN
No. 065537
LICENSED PROFESSIONAL ENGINEER

DATE:	09/24/14
PROJECT No:	1302510
DRAWN:	CAD
CHK:	CL
SCALE:	
REV:	
DWG No:	**S-044.03**
DOB PAGE No:	of

DOB EMPLOYEE STAMP:

Tina Mathew, RA
APPROVED
Under Directive 2 of 1975
AMENDED APPLICATION
Date: 10/23/2017
NYC Development Hub

DOB B-SCAN:

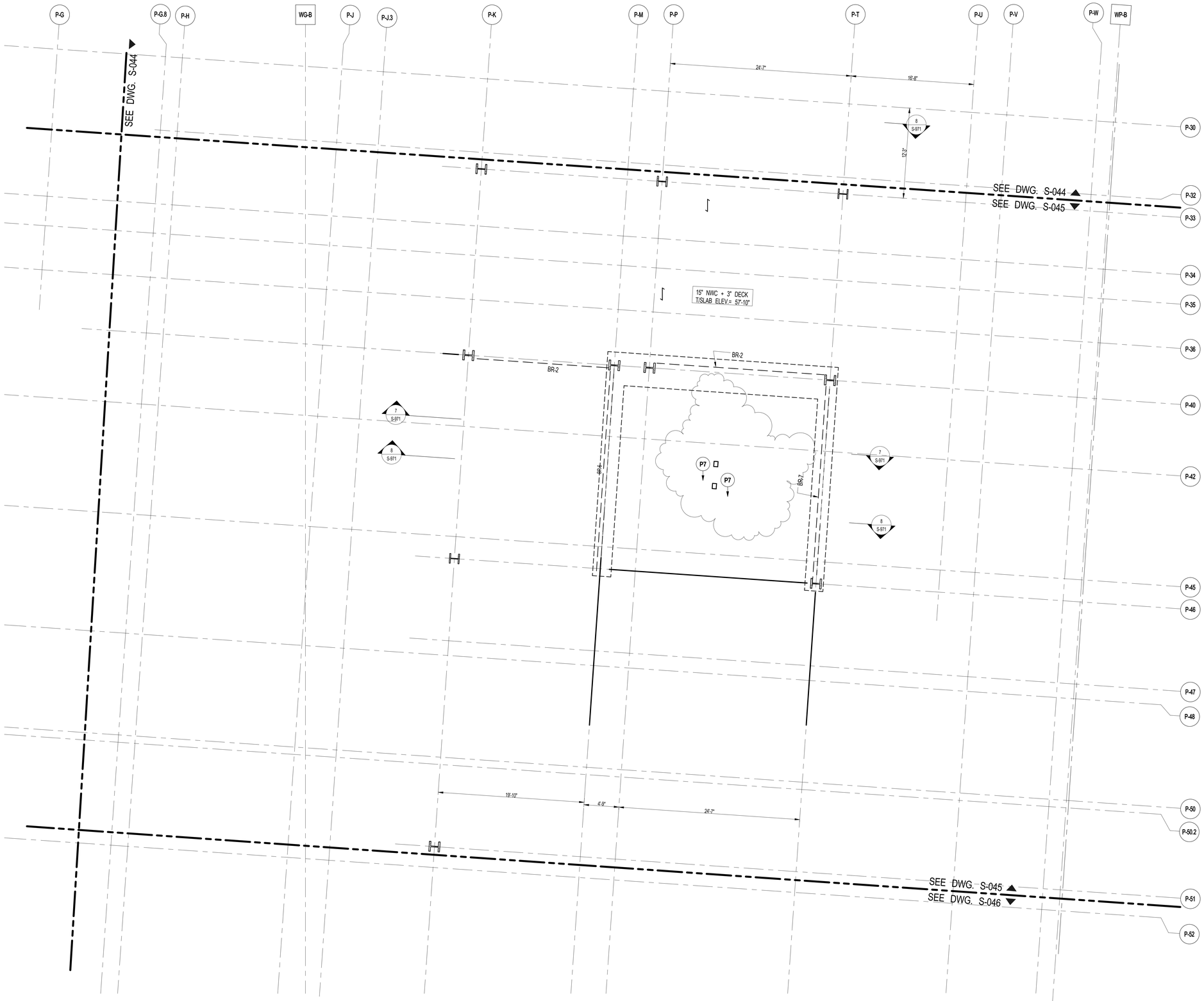

1 S-045 4TH FLOOR FRAMING PLAN - PART 5

SCALE: 3/16" = 1'-0"

NOTES:

1. FOR BALANCE OF INFORMATION SEE CORRESPONDING OVERALL FRAMING PLAN.
2. SEE TYPICAL DETAIL ON S-962 FOR SHEAR WALL POSTS / INTERIOR BEARING WALL.
3. FOR LOCATIONS OF SHEARWALL POSTS / BEARING WALL POSTS REFER TO S-201 THRU S-204 BY SPECIALTY ENGINEERS.(DATED 01.30.2015)
4. W-BEAM TOP & BOTTOM FLANGE TO BE CUT 6" WIDE.

KEY PLAN:

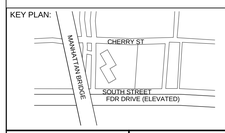

PROJECT NORTH

TRUE NORTH

DEVELOPER:
EXTELL DEVELOPMENT COMPANY
805 Third Ave, 7th Floor
New York, NY 10022
TEL: 212-712-6000 FAX: 212-712-6100

ARCHITECT OF RECORD:
AAI ARCHITECTS, P.C.
14 Wall Street, 2nd Floor
New York, NY 10005
TEL: 212-964-4040 FAX: 212-964-4090

INTERIOR DESIGNER:
MEYER DAVIS
180 Varick St, suite 404
New York, NY 10014
TEL: 212-627-5574

LANDSCAPE DESIGNER:
WEST 8 URBAN DESIGN & LANDSCAPE ARCHITECTURE P.C.
333 Hudson Street, Suite 905
New York, NY 10013
TEL: 212-285-0088 FAX: 212-285-0228

STRUCTURAL ENGINEERS:
WSP
228 East 45th Street
New York, NY 10017
TEL: 212-687-9888 FAX: 646-487-5501

MEP ENGINEERS:
ICOR ASSOCIATES, LLC
485 C Route 1 South, Suite 200
Iseline, NJ 08830
TEL: 908-272-3300 FAX: 908-272-4440

GEOTECHNICAL ENGINEERS:
LANGAN ENGINEERING & ENVIRONMENTAL SERVICES
21 Penn Plaza - 360 West 31st Street, 8th Floor
New York, NY 10001
TEL: 212.479.5400 FAX: 212.479.5444

No.	DESCRIPTION:	DATE:
	STEEL BID PACKAGE	02-24-15
	ADDENDUM #3	03-27-15
	50% CONSTRUCTION DOCUMENTS	04-08-15
	ADDENDUM #4	04-24-15
	ADDENDUM #5	05-01-15
	ADDENDUM #10	07-20-15
	ISSUED FOR FILING	07-28-15
	ADDENDUM #14	10-22-15
	90% CONSTRUCTION DOCUMENTS	01-15-16
	ASI #56	02-19-16
	ASI #58	03-04-16
	ISSUED FOR FILING	03-07-16
	ASI#59	03-11-16
1	ASI #66	06-03-16
2	ISSUED FOR FILING	05-22-17

Discrepancies must be reported immediately to the Architect before proceeding. Only figured dimensions are to be used. Contractors must check all dimensions on site. This drawing is protected by copyright.

ALL DIMENSIONS ARE SHOWN IN IMPERIAL.

CONSULTANT:
WSP

PROJECT:
252 SOUTH STREET
NEW YORK, NY

DRAWING TITLE:
4TH FLOOR FRAMING PLAN - PART 5

SEAL & SIGNATURE:
STATE OF NEW YORK
AHMAD RAHIMIAN
No. 065537
LICENSED PROFESSIONAL ENGINEER

DATE:	02/20/15
PROJECT No:	1302510
DRAWN: CAD	REV:
CHK: CL	
SCALE: As indicated	
DWG No:	S-045.03
DOB PAGE No:	of

DOB EMPLOYEE STAMP:
Tina Mathew, RA
APPROVED
Under Directive 2 of 1975
AMENDED APPLICATION
Date: 10/23/2017
NYC Development Hub

DOB B-SCAN:

FILE NAME:
PLOT DATE:

DEPT OF BLDGS121185539 Job Number
E-389934072 3 Scan Code

30" x 42" Arch E1 - SHEET SIZE

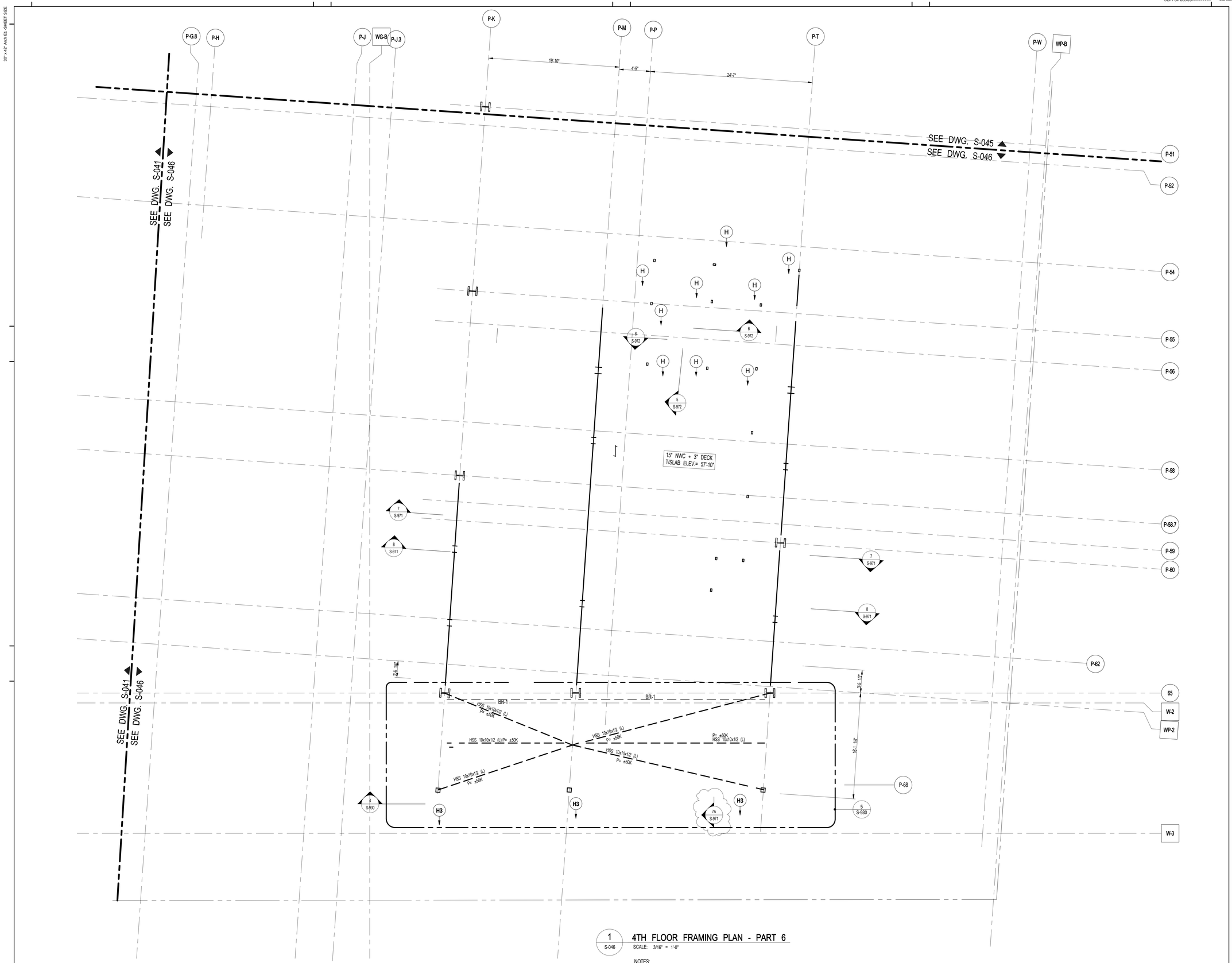

1 S-046 **4TH FLOOR FRAMING PLAN - PART 6**

SCALE: 3/16" = 1'-0"

NOTES:

1. FOR BALANCE OF INFORMATION SEE CORRESPONDING OVERALL FRAMING PLAN.
2. SEE TYPICAL DETAIL ON S-962 FOR SHEAR WALL POSTS / INTERIOR BEARING WALL.
3. FOR LOCATIONS OF SHEARWALL POSTS / BEARING WALL POSTS REFER TO S-201 THRU S-204 BY SPECIALTY ENGINEERS.(DATED 01.30.2015)
4. W-BEAM TOP & BOTTOM FLANGE TO BE CUT 6" WIDE.

FILE NAME:
PLOT DATE:

KEY PLAN:

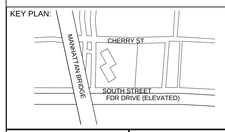

PROJECT NORTH

TRUE NORTH

DEVELOPER:
EXTELL DEVELOPMENT COMPANY
805 Third Ave, 7th Floor
New York, NY 10022
TEL: 212-712-6000 FAX: 212-712-6100

ARCHITECT OF RECORD:
AAI ARCHITECTS, P.C.
14 Wall Street, 2nd Floor
New York, NY 10005
TEL: 212-964-4040 FAX: 212-964-4090

INTERIOR DESIGNER:
MEYER DAVIS
180 Varick St, suite 404
New York, NY 10014
TEL: 212-627-5574

LANDSCAPE DESIGNER:
WEST 8 URBAN DESIGN & LANDSCAPE ARCHITECTURE P.C.
333 Hudson Street, Suite 905
New York, NY 10013
TEL: 212-285-0088 FAX: 212-285-0228

STRUCTURAL ENGINEERS:
WSP
228 East 45th Street
New York, NY 10017
TEL: 212-687-9888 FAX: 646-487-5501

MEP ENGINEERS:
ICOR ASSOCIATES, LLC
485 C Route 1 South, Suite 200
Iseline, NJ 08830
TEL: 908-272-3300 FAX: 908-272-4440

GEOTECHNICAL ENGINEERS:
LANGAN ENGINEERING & ENVIRONMENTAL SERVICES
21 Penn Plaza - 360 West 31st Street, 8th Floor
New York, NY 10001
TEL: 212.479.5400 FAX: 212.479.5444

No.	DESCRIPTION:	DATE:
	STEEL BID PACKAGE	02-24-15
	ADDENDUM #3	03-27-15
	50% CONSTRUCTION DOCUMENTS	04-08-15
	ADDENDUM #4	04-24-15
	ADDENDUM #5	05-01-15
	ADDENDUM #10	07-20-15
	ISSUED FOR FILING	07-28-15
	ADDENDUM #14	10-22-15
	90% CONSTRUCTION DOCUMENTS	01-15-16
	ASI #56	02-19-16
	ASI #57	02-26-16
	ASI #58	03-04-16
	ISSUED FOR FILING	03-07-16
	ASI#59	03-11-16
	ISSUE FOR CONSTRUCTION	03-18-16
1	ASI #66	06-03-16
2	ASI #68	07-01-16
3	ASI #70	07-15-16
4	ISSUED FOR FILING	05-22-17

Discrepancies must be reported immediately to the Architect before proceeding. Only figured dimensions are to be used. Contractors must check all dimensions on site. This drawing is protected by copyright.

ALL DIMENSIONS ARE SHOWN IN IMPERIAL.

CONSULTANT:
WSP

PROJECT:
252 SOUTH STREET
NEW YORK, NY

DRAWING TITLE:
4TH FLOOR FRAMING PLAN - PART 6

SEAL & SIGNATURE:

DATE:	02/20/15
PROJECT No:	1302510
DRAWN: CAD	REV:
CHK: CL	
SCALE: As indicated	

DWG No:
S-046.03

DOB PAGE No: of

DOB EMPLOYEE STAMP:

Tina Mathew, RA
Building
APPROVED
Under Directive 2 of 1975
AMENDED APPLICATION
Date: 10/23/2017
NYC Development Hub

DOB B-SCAN:

DEPT OF BLDGS121185539 Job Number
E1589645267/3 Scan Code
30" x 42" Anti El. SHEET SIZE

1 S-047 — 4TH FLOOR INTERMEDIATE PART 1 FRAMING PLAN
SCALE: 3/16" = 1'-0"

NOTE:
1. FOR BALANCE OF NOTES SEE DRAWING S-010.

2 S-047 — 4TH FLOOR INTERMEDIATE PART 1 FRAMING PLAN
SCALE: 3/16" = 1'-0"

NOTE:
1. FOR BALANCE OF NOTES SEE DRAWING S-010.

KEY PLAN:

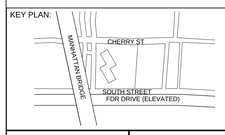

PROJECT NORTH

TRUE NORTH

DEVELOPER:
EXTELL DEVELOPMENT COMPANY
805 Third Ave, 7th Floor
New York, NY 10022
TEL: 212-712-6000 FAX: 212-712-6100

ARCHITECT OF RECORD:
AAI ARCHITECTS, P.C.
14 Wall Street, 2nd Floor
New York, NY 10005
TEL: 212-964-4040 FAX: 212-964-4090

INTERIOR DESIGNER:
MEYER DAVIS
180 Varick St, suite 404
New York, NY 10014
TEL: 212-627-5574

LANDSCAPE DESIGNER:
WEST 8 URBAN DESIGN & LANDSCAPE ARCHITECTURE P.C.
333 Hudson Street, Suite 905
New York, NY 10013
TEL: 212-285-0088 FAX: 212-285-0228

STRUCTURAL ENGINEERS:
WSP
228 East 45th Street
New York, NY 10017
TEL: 212-687-9888 FAX: 646-487-5501

MEP ENGINEERS:
ICOR ASSOCIATES, LLC
485 C Route 1 South, Suite 200
Iseline, NJ 08830
TEL: 908-272-3300 FAX: 908-272-4440

GEOTECHNICAL ENGINEERS:
LANGAN ENGINEERING & ENVIRONMENTAL SERVICES
21 Penn Plaza - 360 West 31st Street, 8th Floor
New York, NY 10001
TEL: 212.479.5400 FAX: 212.479.5444

No.	DESCRIPTION:	DATE:
	90% CONSTRUCTION DOCUMENTS	01-15-16
	ISSUED FOR FILING	03-07-16
	ISSUE FOR CONSTRUCTION	03-18-16
	ISSUED FOR FILING	05-22-17

Discrepancies must be reported immediately to the Architect before proceeding. Only figured dimensions are to be used. Contractors must check all dimensions on site. This drawing is protected by copyright.

ALL DIMENSIONS ARE SHOWN IN IMPERIAL.

CONSULTANT:
WSP

PROJECT:
252 SOUTH STREET
NEW YORK, NY

DRAWING TITLE:
4TH INTERMEDIATE FRAMING PART PLANS

SEAL & SIGNATURE:
STATE OF NEW YORK — AHMAD RAMADAN — No. 085037 — LICENSED PROFESSIONAL ENGINEER

DATE:	12/10/15
PROJECT No:	1302510
DRAWN: CAD	REV:
CHK: CL	
SCALE: 3/16" = 1'-0"	
DWG No:	**S-047.01**
DOB PAGE No:	of

DOB EMPLOYEE STAMP:
Tina Mathew, RA
APPROVED
Under Directive 2 of 1975
AMENDED APPLICATION
Date: 10/23/2017
NYC Development Hub

DOB B-SCAN:

FILE NAME:
PLOT DATE:

DEPT OF BLDGS121185639 Job Number
IE3197939951 Scan Code
30" x 42" Arch E1 - SHEET SIZE

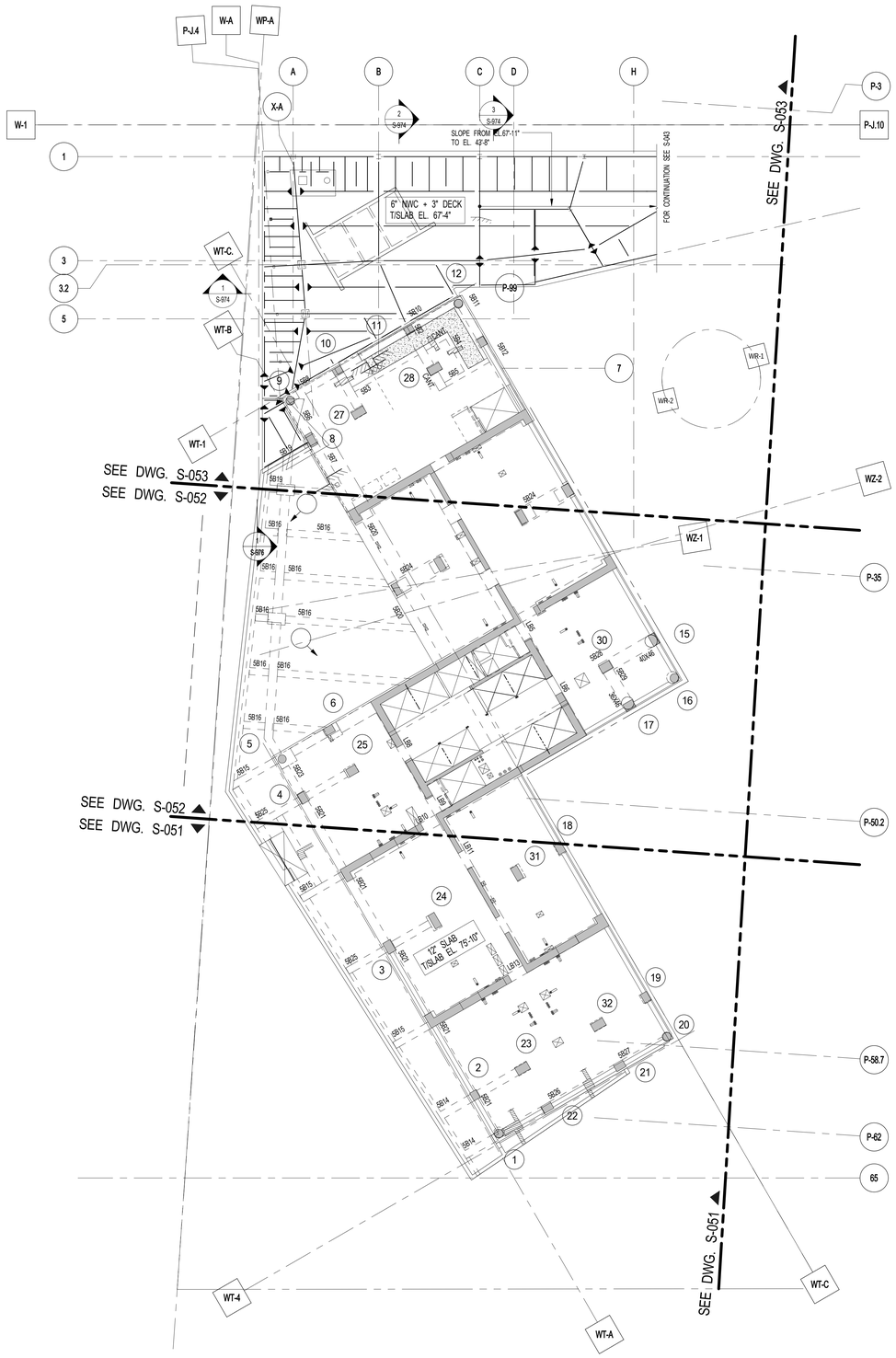

1 S-050 **5TH FLOOR OVERALL FRAMING PLAN**
SCALE: 1/16" = 1'-0"

CONCRETE NOTES:

1. TOP OF SLAB ELEVATION SEE PLAN.
2. SLAB TO BE 12" THICK U.O.N. THUS ▭ ON PLAN.
3. BOTTOM REINFORCEMENT TO BE #5@12 CONT. E.W. FOR 12" SLAB, FOR ADDITIONAL REINFORCEMENT SEE PLAN.
4. FOR DETAILS OF THE INTEGRITY REINFORCEMENT SEE DRAWING S-965.
5. FOR BALANCE OF NOTES SEE DRAWING S-010.

5TH FLOOR BEAM SCHEDULE

BEAM MARK	SIZE WIDTH	SIZE DEPTH	REINFORCEMENT BOTTOM CONTINUOUS	REINFORCEMENT TOP CONTINUOUS	STIRRUPS TYPE	STIRRUPS SIZE	STIRRUPS SPACING	REMARKS
5B1	30	133	6-#9	6-#9	1B	#5	@12	#6@10 HORIZ. E.F., CONT.
5B2	30	97/133/46 CANT	6-#9	6-#9	1B	#5	@12	#6@10 HORIZ. E.F., CONT.
5B3	18	46	3-#9	3-#9	1	#4	@12	#4@8 HORIZ. E.F., CONT.
5B4	16	46	2-#9	2-#7	1	#4	@12	#4@8 HORIZ. E.F., CONT.
5B5	16	46	2-#9	2-#9	1	#4	@12	#4@8 HORIZ. E.F., CONT.
5B6	28	140	4-#9	4-#9	1	#5	@12	#6@10 HORIZ. E.F., CONT.
5B7	28	102	4-#9	4-#9	1	#5	@12	#6@10 HORIZ. E.F., CONT.
5B8	26	158/138	4-#9	4-#9	1	#5	@12	#6@10 HORIZ. E.F., CONT.,#5@6 STIRRUPS AT COL. 9
5B9	24	120/ 154	4-#9	4-#9	1	#5	@12	#7@10 HORIZ. E.F., CONT.
5B10	24	138	4-#9	4-#9	1	#5	@12	#6@10 HORIZ. E.F., CONT.,#5@6 STIRRUPS AT COL. 12
5B11	26	150	4-#9	4-#9	1	#5	@12	#6@10 HORIZ. E.F., CONT.
5B12	26	67	4-#10	4-#9	1	#5	@12	#4@10 HORIZ. E.F., CONT.
5B13		48	4-#8 (2 LAYERS)	4-#8 (2 LAYERS)	1	#4	@12	
5B14	26	48/66	4-#11	8-#11 (2 LAYERS)	2	#4	@12	#5@10 HORIZ. E.F., SEE NOTE
5B15	24	54	4-#11	8-#11 (2 LAYERS)	2	#4	@12	#5@10 HORIZ. E.F., CONT.
5B16	24	48	6-#11 (2 LAYERS)	3-#10	1B	#4	@12	#4@10 HORIZ. E.F., CONT ADD'L. REBAR SHOWN ON PLAN.
5B19	24	48	3-#10	6-#10 (2 LAYERS)	1	#4	@12	#4@10 HORIZ. E.F., CONT.
5B20	32	66	6-#11	6-#11	2	#4	@12	#5@10 HORIZ. E.F., CONT.
5B21	30	30	4-#11	4-#11	2	#4	@12	
5B22	30	60	15-#11 (3 LAYERS)	15-#11 (3 LAYERS)	2A	#5	@8	#9@10 HORIZ. E.F. CONT.(MECH. SPLICE ONLY)
5B23	26	60/78	3-#11	6-#11 (2 LAYERS)	2A	#4	@12	#11@10 HORIZ. E.F., CONT.
5B24	56	60	10-#11	24-#11 (2 LAYERS)	3	#5	@10	#10@6 HORIZ. E.F., CONT.
5B25	24	54/72	4-#11	8-#11 (2 LAYERS)	2	#4	@12	#5@10 HORIZ. E.F., SEE NOTE
5B26	32	30	4-#9	4-#9	2	#4	@12	
5B27	32 /26	30	4-#9	4-#9	2	#4	@12	
5B28	40	46	9-#11	18-#11 (2LAYERS)	2	#4	@9	#6@8 HORIZ. EA. FACE CONT.
5B29	36	46	8-#11	18-#11 (2LAYERS)	2	#4	@8	#6@8 HORIZ. EA. FACE CONT.
5B30	12	116	4-#9 (2LAYERS)	2-#9 (2LAYERS)	1	#4	@12	#4@10 HORIZ. EA. FACE CONT.
5B31	36	14	7-#9	7-#7	2	#4	@5	
5B32	16 /12	116	4-#9 (2LAYERS)	2-#9 (2LAYERS)	1	#4	@12	#4@10 HORIZ.EA. FACE CONT.,1-#9B&1-#7T ADD'L IN 16" WIDE BM.
5B33	6	116	2-#8 (2LAYERS)	2-#8 (2LAYERS)	1A	#4	@8	#4@8 HORIZ. CONT.
5B34	24	32	4-#9	4-#7	1B	#4	@12	SEE SECTION 1/S-984
5B35	24	48	4-#8	4-#8	2	#4	@12	#5@8 HORIZ. E.F., CONT. + ADD'L #5@8 U-BAR AT EMBEDED PLATE

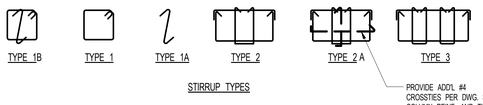

STIRRUP TYPES

KEY PLAN:

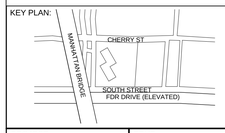

PROJECT NORTH | TRUE NORTH

DEVELOPER:
EXTELL DEVELOPMENT COMPANY
805 Third Ave, 7th Floor
New York, NY 10022
TEL: 212-712-6000 FAX: 212-712-6100

ARCHITECT OF RECORD:
AAI ARCHITECTS, P.C.
14 Wall Street, 2nd Floor
New York, NY 10005
TEL: 212-964-4040 FAX: 212-964-4090

INTERIOR DESIGNER:
MEYER DAVIS
180 Varick St, suite 404
New York, NY 10014
TEL: 212-627-5574

LANDSCAPE DESIGNER:
WEST 8 URBAN DESIGN & LANDSCAPE ARCHITECTURE P.C.
333 Hudson Street, Suite 905
New York, NY 10013
TEL: 212-285-0088 FAX: 212-285-0228

STRUCTURAL ENGINEERS:
WSP
228 East 45th Street
New York, NY 10017
TEL: 212-687-9888 FAX: 646-487-5501

MEP ENGINEERS:
ICOR ASSOCIATES, LLC
485 C Route 1 South, Suite 200
Iseline, NJ 08830
TEL: 908-272-3300 FAX: 908-272-4440

GEOTECHNICAL ENGINEERS:
LANGAN ENGINEERING & ENVIRONMENTAL SERVICES
21 Penn Plaza - 360 West 31st Street, 8th Floor
New York, NY 10001
TEL: 212.479.5400 FAX: 212.479.5444

No.	DESCRIPTION:	DATE:
	50% SD	02-28-14
	100%SD	04-25-14
	50% DD	08-01-14
	DESIGN DEVELOPMENT	10-07-14
	STEEL BID PACKAGE	02-24-15
	CONCRETE BID PACKAGE	03-06-15
	ADDENDUM #3	03-27-15
	50% CONSTRUCTION DOCUMENTS	04-08-15
	ADDENDUM #4	04-24-15
	ISSUED FOR FILING	07-28-15
	80% CONSTRUCTION DOCUMENTS	08-14-15
	ASI #13	08-26-15
	ADDENDUM #14	10-22-15
	ADDENDUM #15	11-18-15
	ASI #58	03-04-16
	ASI#59	03-11-16
	ISSUE FOR CONSTRUCTION	03-18-16
1	ASI #65	05-20-16
2	ASI #66	06-03-16
3	ISSUED FOR FILING	05-22-17

Discrepancies must be reported immediately to the Architect before proceeding. Only figured dimensions are to be used. Contractors must check all dimensions on site. This drawing is protected by copyright.

ALL DIMENSIONS ARE SHOWN IN IMPERIAL.

CONSULTANT: WSP

PROJECT:
252 SOUTH STREET
NEW YORK, NY

DRAWING TITLE:
5TH FLOOR OVERALL FRAMING PLAN

SEAL & SIGNATURE:

DATE:	02/24/14
PROJECT No:	1302510
DRAWN: CAD	REV:
CHK: CL	
SCALE:	
DWG No:	**S-050.02**
DOB PAGE No:	of

DOB EMPLOYEE STAMP:

DOB B-SCAN:

FILE NAME:
PLOT DATE:

DEPT OF BLDGS121105539 Job Number
E350845834950 Scan Code

30" x 42" Arch E1 SHEET SIZE

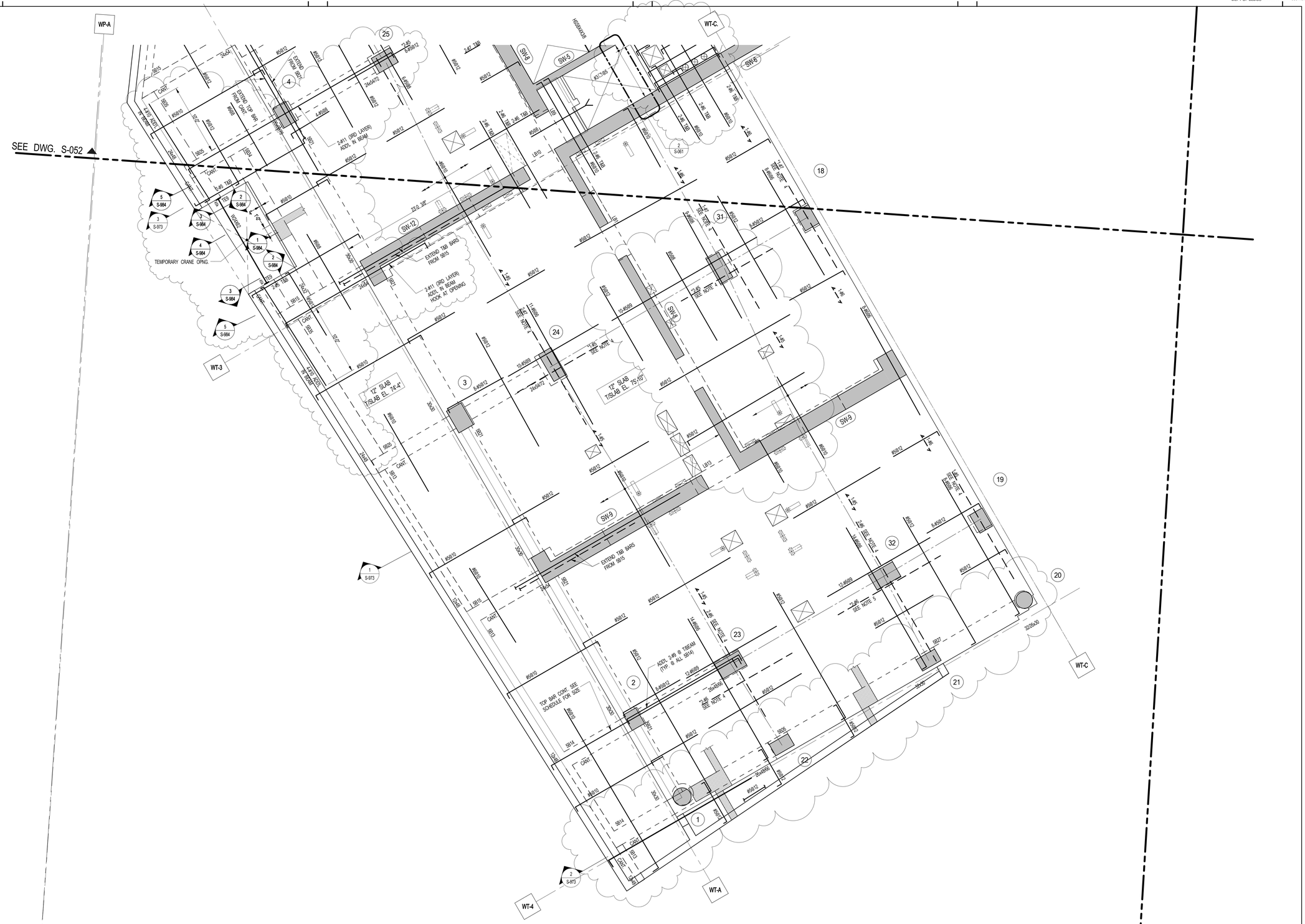

1 S-051 **5TH FLOOR FRAMING PLAN - PART 1**

SCALE: 3/16" = 1'-0"

NOTE:
1. FOR NOTES SEE CORESPONDING OVERALL FRAMING PLAN

FILE NAME:
PLOT DATE:

KEY PLAN:

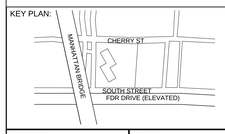

PROJECT NORTH

TRUE NORTH

DEVELOPER:
EXTELL DEVELOPMENT COMPANY
805 Third Ave, 7th Floor
New York, NY 10022
TEL: 212-712-6000 FAX: 212-712-6100

ARCHITECT OF RECORD:
AAI ARCHITECTS, P.C.
14 Wall Street, 2nd Floor
New York, NY 10005
TEL: 212-964-4040 FAX: 212-964-4090

INTERIOR DESIGNER:
MEYER DAVIS
180 Varick St, suite 404
New York, NY 10014
TEL: 212-627-5574

LANDSCAPE DESIGNER:
WEST 8 URBAN DESIGN & LANDSCAPE ARCHITECTURE P.C.
333 Hudson Street, Suite 905
New York, NY 10013
TEL: 212-285-0088 FAX: 212-285-0228

STRUCTURAL ENGINEERS:
WSP
228 East 45th Street
New York, NY 10017
TEL: 212-687-9888 FAX: 646-487-5501

MEP ENGINEERS:
ICOR ASSOCIATES, LLC
485 C Route 1 South, Suite 200
Iseline, NJ 08830
TEL: 908-272-3300 FAX: 908-272-4440

GEOTECHNICAL ENGINEERS:
LANGAN ENGINEERING & ENVIRONMENTAL SERVICES
21 Penn Plaza - 360 West 31st Street, 8th Floor
New York, NY 10001
TEL: 212.479.5400 FAX: 212.479.5444

No.	DESCRIPTION:	DATE:
	DESIGN DEVELOPMENT	10-07-14
	STEEL BID PACKAGE	02-24-15
	CONCRETE BID PACKAGE	03-06-15
	50% CONSTRUCTION DOCUMENTS	04-08-15
	ISSUED FOR FILING	07-28-15
	ADDENDUM #15	11-18-15
	ASI #56	02-19-16
	ASI #58	03-04-16
	ASI#59	03-11-16
	ISSUE FOR CONSTRUCTION	03-18-16
1	ASI #66	06-03-16
2	ASI #67	06-17-16
3	ISSUED FOR FILING	05-22-17

Discrepancies must be reported immediately to the Architect before proceeding. Only figured dimensions are to be used. Contractors must check all dimensions on site. This drawing is protected by copyright.

ALL DIMENSIONS ARE SHOWN IN IMPERIAL.

CONSULTANT:
WSP

PROJECT:
252 SOUTH STREET
NEW YORK, NY

DRAWING TITLE:
5TH FLOOR FRAMING PLAN - PART 1

SEAL & SIGNATURE:
STATE OF NEW YORK · AHMAD RAHIMIAN · No. 085057 · LICENSED PROFESSIONAL ENGINEER

DATE: 09/24/14
PROJECT No: 1302510
DRAWN: CAD REV:
CHK: CL
SCALE:
DWG No: **S-051.02**
DOB PAGE No: of

DOB EMPLOYEE STAMP:
Tina Mathew, RA
APPROVED
Under Directive 2 of 1975
AMENDED APPLICATION
Date: 10/23/2017
NYC Development Hub

DOB B-SCAN:

1 — 5TH FLOOR FRAMING PLAN - PART 2
S-052

SCALE: 3/16" = 1'-0"

NOTE:
1. FOR NOTES SEE CORRESPONDING OVERALL FRAMING PLAN

KEY PLAN:

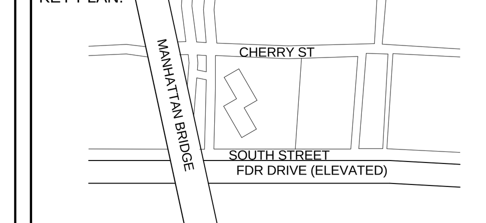

PROJECT NORTH | TRUE NORTH

DEVELOPER:
EXTELL DEVELOPMENT COMPANY
805 Third Ave, 7th Floor
New York, NY 10022
TEL: 212-712-6000 FAX: 212-712-6100

ARCHITECT OF RECORD:
AAI ARCHITECTS, P.C.
14 Wall Street, 2nd Floor
New York, NY 10005
TEL: 212-964-4040 FAX: 212-964-4090

INTERIOR DESIGNER:
MEYER DAVIS
180 Varick St, suite 404
New York, NY 10014
TEL: 212-627-5574

LANDSCAPE DESIGNER:
WEST 8 URBAN DESIGN & LANDSCAPE ARCHITECTURE P.C.
333 Hudson Street, Suite 905
New York, NY 10013
TEL: 212-285-0088 FAX: 212-285-0228

STRUCTURAL ENGINEERS:
WSP
228 East 45th Street
New York, NY 10017
TEL: 212-687-9888 FAX: 646-487-5501

MEP ENGINEERS:
ICOR ASSOCIATES, LLC
485 C Route 1 South, Suite 200
Iseline, NJ 08830
TEL: 908-272-3300 FAX: 908-272-4440

GEOTECHNICAL ENGINEERS:
LANGAN ENGINEERING & ENVIRONMENTAL SERVICES
21 Penn Plaza - 360 West 31st Street, 8th Floor
New York, NY 10001
TEL: 212.479.5400 FAX: 212.479.5444

No.	DESCRIPTION:	DATE:
	DESIGN DEVELOPMENT	10-07-14
	STEEL BID PACKAGE	02-24-15
	CONCRETE BID PACKAGE	03-06-15
	50% CONSTRUCTION DOCUMENTS	04-08-15
	ISSUED FOR FILING	07-28-15
	80% CONSTRUCTION DOCUMENTS	08-14-15
	ADDENDUM #11	09-25-15
	ADDENDUM #14	10-22-15
	ASI #58	03-04-16
	ASI#59	03-11-16
	ISSUE FOR CONSTRUCTION	03-18-16
1	ASI #66	06-03-16
2	ASI #67	06-17-16
3	ISSUED FOR FILING	05-22-17

Discrepancies must be reported immediately to the Architect before proceeding. Only figured dimensions are to be used. Contractors must check all dimensions on site. This drawing is protected by copyright.

ALL DIMENSIONS ARE SHOWN IN IMPERIAL.

CONSULTANT:
WSP

PROJECT:
252 SOUTH STREET
NEW YORK, NY

DRAWING TITLE:
5TH FLOOR FRAMING PLAN - PART 2

SEAL & SIGNATURE:

DATE:	09/24/14
PROJECT No:	1302510
DRAWN:	CAD
REV:	
CHK:	CL
SCALE:	
DWG No:	S-052.02
DOB PAGE No:	of

DOB EMPLOYEE STAMP:
Tina Mathew, RA
APPROVED
Under Directive 2 of 1975
AMENDED APPLICATION
Date: 10/23/2017
NYC Development Hub

DOB B-SCAN:

DEPT OF BLDGS 121185528 Job Number
ES547717029 Scan Code

DEPT OF BLDGS121185539 Job Number
E366963539099 Scan Code

30" x 42" Arch E1 SHEET SIZE

1 S-053 **5TH FLOOR FRAMING PLAN - PART 3**

SCALE: 3/16" = 1'-0"

NOTE:
1. FOR NOTES SEE CORESPONDING OVERALL FRAMING PLAN

KEY PLAN:

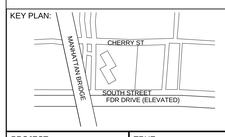

PROJECT NORTH

TRUE NORTH

DEVELOPER:
EXTELL DEVELOPMENT COMPANY
805 Third Ave, 7th Floor
New York, NY 10022
TEL: 212-712-6000 FAX: 212-712-6100

ARCHITECT OF RECORD:
AAI ARCHITECTS, P.C.
14 Wall Street, 2nd Floor
New York, NY 10005
TEL: 212-964-4040 FAX: 212-964-4090

INTERIOR DESIGNER:
MEYER DAVIS
180 Varick St, suite 404
New York, NY 10014
TEL: 212-627-5574

LANDSCAPE DESIGNER:
WEST 8 URBAN DESIGN & LANDSCAPE ARCHITECTURE P.C.
333 Hudson Street, Suite 905
New York, NY 10013
TEL: 212-285-0088 FAX: 212-285-0228

STRUCTURAL ENGINEERS:
WSP
228 East 45th Street
New York, NY 10017
TEL: 212-687-9888 FAX: 646-487-5501

MEP ENGINEERS:
ICOR ASSOCIATES, LLC
485 C Route 1 South, Suite 200
Iselin, NJ 08830
TEL: 908-272-3300 FAX: 908-272-4440

GEOTECHNICAL ENGINEERS:
LANGAN ENGINEERING & ENVIRONMENTAL SERVICES
21 Penn Plaza - 360 West 31st Street, 8th Floor
New York, NY 10001
TEL: 212.479.5400 FAX: 212.479.5444

No.	DESCRIPTION:	DATE:
	DESIGN DEVELOPMENT	10-07-14
	STEEL BID PACKAGE	02-24-15
	CONCRETE BID PACKAGE	03-06-15
	ADDENDUM #3	03-27-15
	50% CONSTRUCTION DOCUMENTS	04-08-15
	ADDENDUM #4	04-24-15
	ISSUED FOR FILING	07-28-15
	80% CONSTRUCTION DOCUMENTS	08-14-15
	ASI #13	08-26-15
	ADDENDUM #11	09-25-15
	ADDENDUM #14	10-22-15
	ADDENDUM #15	11-18-15
	ASI #58	03-04-16
	ASI#59	03-11-16
	ISSUE FOR CONSTRUCTION	03-18-16
1	ASI#61	04-22-16
2	ASI #62	04-29-16
3	ASI #64	05-13-16
4	ASI #66	06-03-16
5	ASI #67	06-17-16
6	ASI #74	09-16-16
7	ASI #81	12-22-16
8	ISSUED FOR FILING	05-22-17

Discrepancies must be reported immediately to the Architect before proceeding. Only figured dimensions are to be used. Contractors must check all dimensions on site. This drawing is protected by copyright.

ALL DIMENSIONS ARE SHOWN IN IMPERIAL.

CONSULTANT:
WSP

PROJECT:
252 SOUTH STREET
NEW YORK, NY

DRAWING TITLE:
5TH FLOOR FRAMING PLAN - PART 3

SEAL & SIGNATURE:

DATE:	09/24/14
PROJECT No:	1302510
DRAWN: CAD	REV:
CHK: CL	
SCALE:	
DWG No:	**S-053.02**
DOB PAGE No:	of

DOB EMPLOYEE STAMP:

Tina Mathew, RA
APPROVED
Under Directive 2 of 1975
AMENDED APPLICATION
Date: 10/23/2017
NYC Development Hub

DOB B-SCAN:

FILE NAME:
PLOT DATE:

DEPT OF BLDGS121185539 Job Number
E50794565004 Scan Code
30" x 42" Arch E1 - SHEET SIZE

1 S-060 TYPICAL LOW-LEVEL (6TH-26TH) FLOOR OVERALL FRAMIMG PLAN
SCALE: 3/32" = 1'-0"

NOTES:

1. TOP OF SLAB EL. TO BE:

6TH FLOOR	86'-11"	U.O.N. ON PLAN.
7TH FLOOR	96'-11"	
8TH FLOOR	106'-11"	
9TH FLOOR	116'-11"	
10TH FLOOR	126'-11"	
11TH FLOOR	136'-11"	
12TH FLOOR	146'-11"	
13TH FLOOR	156'-11"	
14TH FLOOR	166'-11"	
15TH FLOOR	176'-11"	
16TH FLOOR	186'-11"	
17TH FLOOR	198'-0"	
18TH FLOOR	208'-0"	
19TH FLOOR	218'-0"	
20TH FLOOR	228'-0"	
21ST FLOOR	238'-0"	
22ND FLOOR	248'-0"	
23RD FLOOR	258'-0"	
24TH FLOOR	268'-0"	
25TH FLOOR	278'-0"	
26TH FLOOR	288'-0"	

2. SLAB TO BE 9" THICK U.O.N. THUS ____ ON PLAN.
3. BOTTOM REINFORCEMENT TO BE #4@12 CONT. E.W. FOR 9" SLAB, #4@10 CONT. E.W. FOR 10" SLAB U.O.N. ON PLAN.
FOR ADDITIONAL REIFORCEMENT SEE PLAN
4. FOR DETAIL OF INTEGRITY REINF. ADDL. INFORMATION SEE S-965.
5. FOR BALANCE OF NOTES SEE DRAWING S-010.

KEY PLAN:
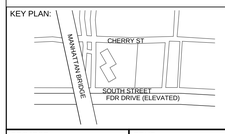

PROJECT NORTH

TRUE NORTH

DEVELOPER:
EXTELL DEVELOPMENT COMPANY
805 Third Ave, 7th Floor
New York, NY 10022
TEL: 212-712-6000 FAX: 212-712-6100

ARCHITECT OF RECORD:
AAI ARCHITECTS, P.C.
14 Wall Street, 2nd Floor
New York, NY 10005
TEL: 212-964-4040 FAX: 212-964-4090

INTERIOR DESIGNER:
MEYER DAVIS
180 Varick St, suite 404
New York, NY 10014
TEL: 212-627-5574

LANDSCAPE DESIGNER:
WEST 8 URBAN DESIGN & LANDSCAPE ARCHITECTURE P.C.
333 Hudson Street, Suite 905
New York, NY 10013
TEL: 212-285-0088 FAX: 212-285-0228

STRUCTURAL ENGINEERS:
WSP
228 East 45th Street
New York, NY 10017
TEL: 212-687-9888 FAX: 646-487-5501

MEP ENGINEERS:
ICOR ASSOCIATES, LLC
485 C Route 1 South, Suite 200
Iseline, NJ 08830
TEL: 908-272-3300 FAX: 908-272-4440

GEOTECHNICAL ENGINEERS:
LANGAN ENGINEERING & ENVIRONMENTAL SERVICES
21 Penn Plaza - 360 West 31st Street, 8th Floor
New York, NY 10001
TEL: 212.479.5400 FAX: 212.479.5444

No.	DESCRIPTION:	DATE:
	50% SD	02-28-14
	100%SD	04-25-14
	50% DD	08-01-14
	DESIGN DEVELOPMENT	10-07-14
	CONCRETE BID PACKAGE	03-06-15
	50% CONSTRUCTION DOCUMENTS	04-08-15
	ISSUED FOR FILING	07-28-15
	80% CONSTRUCTION DOCUMENTS	08-14-15
	ASI #13	08-26-15
1	ISSUED FOR FILING	05-22-17

Discrepancies must be reported immediately to the Architect before proceeding. Only figured dimensions are to be used. Contractors must check all dimensions on site. This drawing is protected by copyright.

ALL DIMENSIONS ARE SHOWN IN IMPERIAL.

CONSULTANT: WSP

PROJECT:
252 SOUTH STREET
NEW YORK, NY

DRAWING TITLE:
6TH-26TH FLOOR OVERALL FRAMING PLAN

SEAL & SIGNATURE:
STATE OF NEW YORK · AHMAD RAMZAN · No. 065507 · LICENSED PROFESSIONAL ENGINEER

DATE:	02/24/14
PROJECT No:	1302510
DRAWN: CAD	REV:
CHK: CL	
SCALE:	
DWG No:	S-060.02
DOB PAGE No:	of

DOB EMPLOYEE STAMP:
Tina Mathew, RA
APPROVED
Under Directive 2 of 1975
AMENDED APPLICATION
Date: 10/23/2017
NYC Development Hub

DOB B-SCAN:

FILE NAME:
PLOT DATE:

30" x 42" Arch E1 - SHEET SIZE

DEPT OF BLDGS 121185528 Job Number ES776893716 Scan Code

2 STAIR INTERMEDIATE LANDING PART PLAN

S-061 SCALE: 3/16" = 1'-0"

NOTE:

1. SEE ARCH. DWGS. FOR LANDING ELEVATION.

1 TYPICAL LOW-LEVEL (6TH-26TH) FLOOR FRAMIMG PLAN - PART 1

S-061 SCALE: 3/16" = 1'-0"

NOTE:

1. FOR NOTES SEE CORESPONDING OVERALL FRAMING PLAN

KEY PLAN:

CHERRY ST

SOUTH STREET FDR DRIVE (ELEVATED)

MANHATTAN BRIDGE

PROJECT NORTH

TRUE NORTH

DEVELOPER:

EXTELL DEVELOPMENT COMPANY
805 Third Ave, 7th Floor
New York, NY 10022
TEL: 212-712-6000 FAX: 212-712-6100

ARCHITECT OF RECORD:

AAI ARCHITECTS, P.C.
14 Wall Street, 2nd Floor
New York, NY 10005
TEL: 212-964-4040 FAX: 212-964-4090

INTERIOR DESIGNER:

MEYER DAVIS
180 Varick St, suite 404
New York, NY 10014
TEL: 212-627-5574

LANDSCAPE DESIGNER:

WEST 8 URBAN DESIGN & LANDSCAPE ARCHITECTURE P.C.
333 Hudson Street, Suite 905
New York, NY 10013
TEL: 212-285-0088 FAX: 212-285-0228

STRUCTURAL ENGINEERS:

WSP
228 East 45th Street
New York, NY 10017
TEL: 212-687-9888 FAX: 646-487-5501

MEP ENGINEERS:

ICOR ASSOCIATES, LLC
485 C Route 1 South, Suite 200
Iseline, NJ 08830
TEL: 908-272-3300 FAX: 908-272-4440

GEOTECHNICAL ENGINEERS:

LANGAN ENGINEERING & ENVIRONMENTAL SERVICES
21 Penn Plaza - 360 West 31st Street, 8th Floor
New York, NY 10001
TEL: 212.479.5400 FAX: 212.479.5444

No.	DESCRIPTION:	DATE:
	DESIGN DEVELOPMENT	10-07-14
	CONCRETE BID PACKAGE	03-06-15
	50% CONSTRUCTION DOCUMENTS	04-08-15
	ISSUED FOR FILING	07-28-15
	80% CONSTRUCTION DOCUMENTS	08-14-15
	ISSUE FOR CONSTRUCTION	03-18-16
1	ASI #63	05-06-16
2	ASI #65	05-20-16
3	ASI #66	06-03-16
4	ASI #67	06-17-16
5	ASI #70	07-15-16
6	ASI #71	07-29-16
7	ISSUED FOR FILING	05-22-17

Discrepancies must be reported immediately to the Architect before proceeding. Only figured dimensions are to be used. Contractors must check all dimensions on site. This drawing is protected by copyright.

ALL DIMENSIONS ARE SHOWN IN IMPERIAL.

CONSULTANT:

WSP

PROJECT:

252 SOUTH STREET
NEW YORK, NY

DRAWING TITLE:

6TH-26TH FLOOR FRAMIMG PLAN - PART 1

SEAL & SIGNATURE:

STATE OF NEW YORK · AHMAD RAHIMIAN · NO. 065507 · LICENSED PROFESSIONAL ENGINEER

DATE:	09/24/14
PROJECT No:	1302510
DRAWN: CAD	REV:
CHK: CL	
SCALE:	
DWG No:	S-061.02
DOB PAGE No:	of

DOB EMPLOYEE STAMP:

DOB B-SCAN:

Tina Mathew, RA
APPROVED
Under Directive 2 of 1975
AMENDED APPLICATION
Date: 10/23/2017
NYC Development Hub

FILE NAME:
PLOT DATE:

DEPT OF BLDGS121105032 Job Number
ES:7656853006 Scan Code
30" x 42" Anth E1 - SHEET SIZE

1 S-062 TYPICAL LOW-LEVEL (6TH-26TH) FLOOR FRAMIMG PLAN - PART 2

SCALE: 3/16" = 1'-0"

NOTE:
1. FOR NOTES, SEE CORESPONDING OVERALL FRAMING PLAN

KEY PLAN:

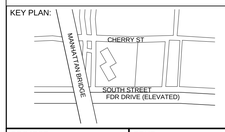

PROJECT NORTH

TRUE NORTH

DEVELOPER:
EXTELL DEVELOPMENT COMPANY
805 Third Ave, 7th Floor
New York, NY 10022
TEL: 212-712-6000 FAX: 212-712-6100

ARCHITECT OF RECORD:
AAI ARCHITECTS, P.C.
14 Wall Street, 2nd Floor
New York, NY 10005
TEL: 212-964-4040 FAX: 212-964-4090

INTERIOR DESIGNER:
MEYER DAVIS
180 Varick St, suite 404
New York, NY 10014
TEL: 212-627-5574

LANDSCAPE DESIGNER:
WEST 8 URBAN DESIGN & LANDSCAPE ARCHITECTURE P.C.
333 Hudson Street, Suite 905
New York, NY 10013
TEL: 212-285-0088 FAX: 212-285-0228

STRUCTURAL ENGINEERS:
WSP
228 East 45th Street
New York, NY 10017
TEL: 212-687-9888 FAX: 646-487-5501

MEP ENGINEERS:
ICOR ASSOCIATES, LLC
485 C Route 1 South, Suite 200
Iseline, NJ 08830
TEL: 908-272-3300 FAX: 908-272-4440

GEOTECHNICAL ENGINEERS:
LANGAN ENGINEERING & ENVIRONMENTAL SERVICES
21 Penn Plaza - 360 West 31st Street, 8th Floor
New York, NY 10001
TEL: 212.479.5400 FAX: 212.479.5444

No.	DESCRIPTION:	DATE:
	DESIGN DEVELOPMENT	10-07-14
	CONCRETE BID PACKAGE	03-06-15
	50% CONSTRUCTION DOCUMENTS	04-08-15
	ISSUED FOR FILING	07-28-15
	80% CONSTRUCTION DOCUMENTS	08-14-15
	ISSUE FOR CONSTRUCTION	03-18-16
1	ASI #63	05-06-16
2	ASI #66	06-03-16
3	ASI #70	07-15-16
4	ASI #71	07-29-16
5	ISSUED FOR FILING	05-22-17

Discrepancies must be reported immediately to the Architect before proceeding. Only figured dimensions are to be used. Contractors must check all dimensions on site. This drawing is protected by copyright.

ALL DIMENSIONS ARE SHOWN IN IMPERIAL.

CONSULTANT:
WSP

PROJECT:
252 SOUTH STREET
NEW YORK, NY

DRAWING TITLE:
6TH-26TH FLOOR FRAMIMG PLAN - PART 2

SEAL & SIGNATURE:
STATE OF NEW YORK ANMAD RAHMAN LICENSED PROFESSIONAL ENGINEER No. 085057

DATE:	09/24/14
PROJECT No:	1302510
DRAWN: CAD	REV:
CHK: CL	
SCALE:	
DWG No:	**S-062.02**
DOB PAGE No:	of

DOB EMPLOYEE STAMP:
Tina Mathew, RA
APPROVED
Under Directive 2 of 1975
AMENDED APPLICATION
Date: 10/23/2017
NYC Development Hub

DOB B-SCAN:

FILE NAME:
PLOT DATE:

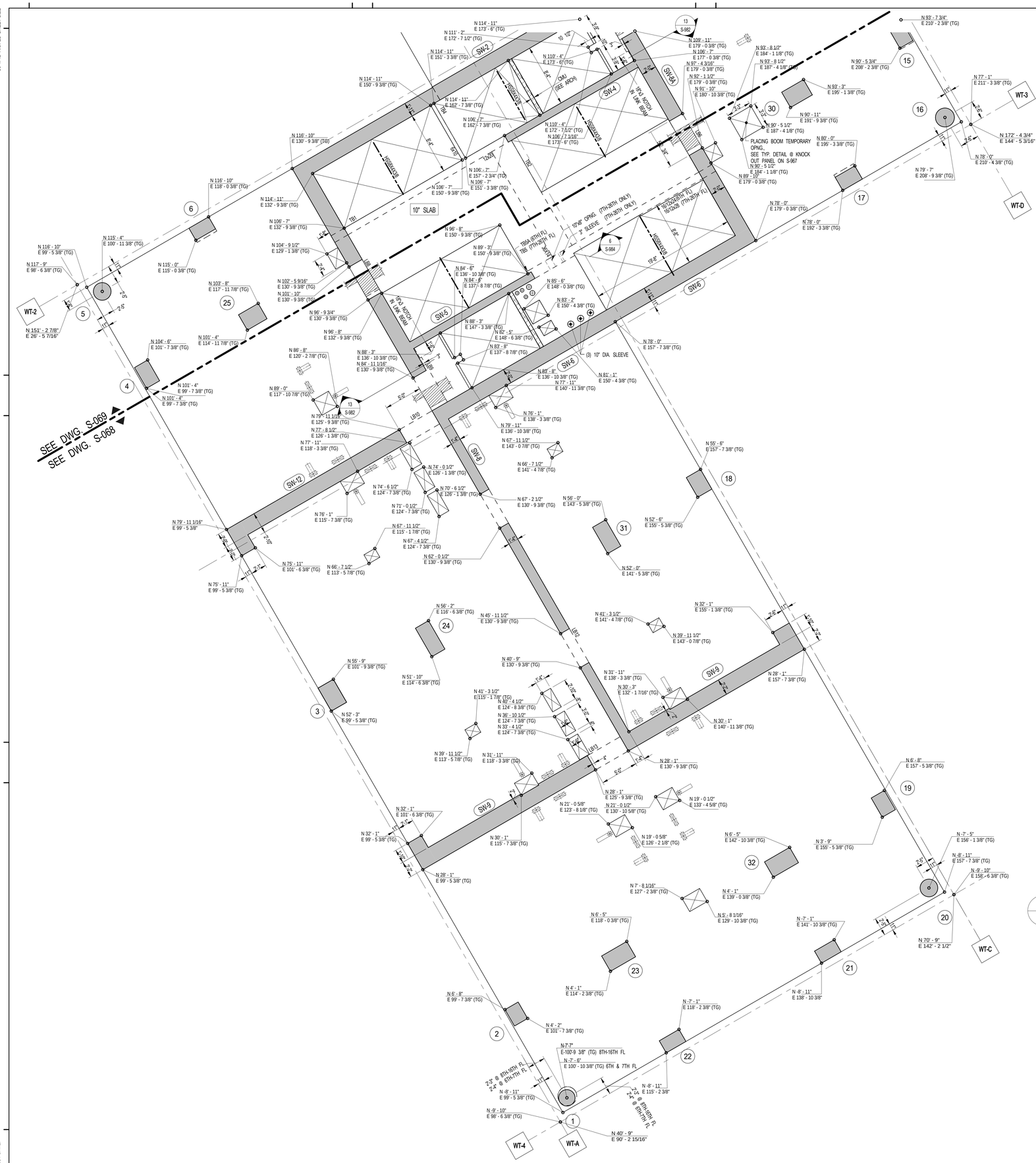

1 S-068 TYPICAL LOW-LEVEL (6TH-16TH) FLOOR GENERAL ARRANGEMENT PLAN

SCALE: 3/16" = 1'-0"

NOTES:

1. TOP OF SLAB EL. TO BE:

6TH FLOOR	86'-11"	U.O.N. ON PLAN.
7TH FLOOR	96'-11"	
8TH FLOOR	106'-11"	
9TH FLOOR	116'-11"	
10TH FLOOR	126'-11"	
11TH FLOOR	136'-11"	
12TH FLOOR	146'-11"	
13TH FLOOR	156'-11"	
14TH FLOOR	166'-11"	
15TH FLOOR	176'-11"	
16TH FLOOR	186'-11"	

2. SLAB TO BE 9" THICK U.O.N. THUS ON PLAN.
3. FOR BALANCE OF NOTES SEE DRAWING S-010.

KEY PLAN:

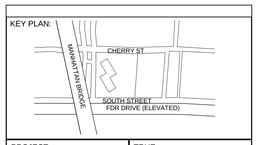

PROJECT NORTH | TRUE NORTH

DEVELOPER:
EXTELL DEVELOPMENT COMPANY
805 Third Ave, 7th Floor
New York, NY 10022
TEL: 212-712-6000 FAX: 212-712-6100

ARCHITECT OF RECORD:
AAI ARCHITECTS, P.C.
14 Wall Street, 2nd Floor
New York, NY 10005
TEL: 212-964-4040 FAX: 212-964-4090

INTERIOR DESIGNER:
MEYER DAVIS
180 Varick St, suite 404
New York, NY 10014
TEL: 212-627-5574

LANDSCAPE DESIGNER:
WEST 8 URBAN DESIGN & LANDSCAPE ARCHITECTURE P.C.
333 Hudson Street, Suite 905
New York, NY 10013
TEL: 212-285-0088 FAX: 212-285-0228

STRUCTURAL ENGINEERS:
WSP
228 East 45th Street
New York, NY 10017
TEL: 212-687-9888 FAX: 646-487-5501

MEP ENGINEERS:
ICOR ASSOCIATES, LLC
485 C Route 1 South, Suite 200
Iseline, NJ 08830
TEL: 908-272-3300 FAX: 908-272-4440

GEOTECHNICAL ENGINEERS:
LANGAN ENGINEERING & ENVIRONMENTAL SERVICES
21 Penn Plaza - 360 West 31st Street, 8th Floor
New York, NY 10001
TEL: 212.479.5400 FAX: 212.479.5444

No.	DESCRIPTION:	DATE:
	ASI#59	03-11-16
	ISSUE FOR CONSTRUCTION	03-18-16
1	ASI #63	05-06-16
2	ASI #66	06-03-16
3	ASI #70	07-15-16
4	ASI #71	07-29-16
	ISSUED FOR FILING	05-22-17

Discrepancies must be reported immediately to the Architect before proceeding. Only figured dimensions are to be used. Contractors must check all dimensions on site. This drawing is protected by copyright.

ALL DIMENSIONS ARE SHOWN IN IMPERIAL.

CONSULTANT:
WSP

PROJECT:
252 SOUTH STREET
NEW YORK, NY

DRAWING TITLE:
6TH-16TH FLOOR GENERAL ARRANGEMENT PLAN - PART 1

SEAL & SIGNATURE:
STATE OF NEW YORK · AHMAD RAHMAN · No. 065557 · LICENSED PROFESSIONAL ENGINEER

DATE:	08/06/15
PROJECT No:	1302510
DRAWN: CAD	REV:
CHK: CL	
SCALE: As indicated	
DWG No:	S-068.00
DOB PAGE No:	of

DOB EMPLOYEE STAMP:
Tina Mathew, RA
APPROVED
Under Directive 2 of 1975
AMENDED APPLICATION
Date: 10/23/2017
NYC Development Hub

DOB B-SCAN:

30" x 42" Arch E1 - SHEET SIZE

FILE NAME:
PLOT DATE:

1 S-069 TYPICAL LOW-LEVEL (6TH-16TH) FLOOR FRAMIMG PLAN
SCALE: 3/16" = 1'-0"

NOTES:

1. FOR NOTES SEE DWG. S-068.

DEPT OF BLDGS 121185528 Job Number   ES431925840 Scan Code

KEY PLAN:

PROJECT NORTH   TRUE NORTH

DEVELOPER:
EXTELL DEVELOPMENT COMPANY
805 Third Ave, 7th Floor
New York, NY 10022
TEL: 212-712-6000 FAX: 212-712-6100

ARCHITECT OF RECORD:
AAI ARCHITECTS, P.C.
14 Wall Street, 2nd Floor
New York, NY 10005
TEL: 212-964-4040 FAX: 212-964-4090

INTERIOR DESIGNER:
MEYER DAVIS
180 Varick St, suite 404
New York, NY 10014
TEL: 212-627-5574

LANDSCAPE DESIGNER:
WEST 8 URBAN DESIGN & LANDSCAPE ARCHITECTURE P.C.
333 Hudson Street, Suite 905
New York, NY 10013
TEL: 212-285-0088 FAX: 212-285-0228

STRUCTURAL ENGINEERS:
WSP
228 East 45th Street
New York, NY 10017
TEL: 212-687-9888 FAX: 646-487-5501

MEP ENGINEERS:
ICOR ASSOCIATES, LLC
485 C Route 1 South, Suite 200
Iseline, NJ 08830
TEL: 908-272-3300 FAX: 908-272-4440

GEOTECHNICAL ENGINEERS:
LANGAN ENGINEERING & ENVIRONMENTAL SERVICES
21 Penn Plaza - 360 West 31st Street, 8th Floor
New York, NY 10001
TEL: 212.479.5400 FAX: 212.479.5444

No.	DESCRIPTION:	DATE:
	ASI#59	03-11-16
	ISSUE FOR CONSTRUCTION	03-18-16
1	ASI #63	05-06-16
2	ASI #66	06-03-16
3	ASI #70	07-15-16
	ISSUED FOR FILING	05-22-17

Discrepancies must be reported immediately to the Architect before proceeding. Only figured dimensions are to be used. Contractors must check all dimensions on site. This drawing is protected by copyright.

ALL DIMENSIONS ARE SHOWN IN IMPERIAL.

CONSULTANT:
WSP

PROJECT:
252 SOUTH STREET
NEW YORK, NY

DRAWING TITLE:
6TH-16TH FLOOR GENERAL ARRANGEMENT PLAN - PART 2

SEAL & SIGNATURE:

DATE:	08/06/15
PROJECT No:	1302510
DRAWN: CAD	REV:
CHK: CL	
SCALE: As indicated	
DWG No:	S-069.00
DOB PAGE No:	of

DOB EMPLOYEE STAMP: DOB B-SCAN:

Tina Mathew, RA
APPROVED
Under Directive 2 of 1975
AMENDED APPLICATION
Date: 10/23/2017
NYC Development Hub

30" x 42" Arch E1 - SHEET SIZE
FILE NAME:
PLOT DATE:

30" x 42" Arch E1 - SHEET SIZE

DEPT OF BLDGS 121185528 Job Number
ES375320348 Scan Code

1 / S-071 — 7TH, 16TH,25 TH FLOOR FRAMIMG PART PLAN (AT CRANE TIES FLOORS)

SCALE: 3/16" = 1'-0"

NOTE:

1. FOR NOTES SEE CORRESPONDING OVERALL FRAMING PLAN.

KEY PLAN:

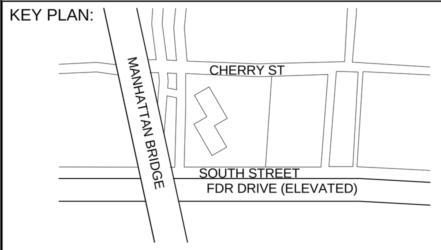

PROJECT NORTH

TRUE NORTH

DEVELOPER:
EXTELL DEVELOPMENT COMPANY
805 Third Ave, 7th Floor
New York, NY 10022
TEL: 212-712-6000 FAX: 212-712-6100

ARCHITECT OF RECORD:
AAI ARCHITECTS, P.C.
14 Wall Street, 2nd Floor
New York, NY 10005
TEL: 212-964-4040 FAX: 212-964-4090

INTERIOR DESIGNER:
MEYER DAVIS
180 Varick St, suite 404
New York, NY 10014
TEL: 212-627-5574

LANDSCAPE DESIGNER:
WEST 8 URBAN DESIGN & LANDSCAPE ARCHITECTURE P.C.
333 Hudson Street, Suite 905
New York, NY 10013
TEL: 212-285-0088 FAX: 212-285-0228

STRUCTURAL ENGINEERS:
WSP
228 East 45th Street
New York, NY 10017
TEL: 212-687-9888 FAX: 646-487-5501

MEP ENGINEERS:
ICOR ASSOCIATES, LLC
485 C Route 1 South, Suite 200
Iseline, NJ 08830
TEL: 908-272-3300 FAX: 908-272-4440

GEOTECHNICAL ENGINEERS:
LANGAN ENGINEERING & ENVIRONMENTAL SERVICES
21 Penn Plaza - 360 West 31st Street, 8th Floor
New York, NY 10001
TEL: 212.479.5400 FAX: 212.479.5444

No.	DESCRIPTION:	DATE:
1	ASI #70	07-15-16
	ISSUED FOR FILING	05-22-17

Discrepancies must be reported immediately to the Architect before proceeding. Only figured dimensions are to be used. Contractors must check all dimensions on site. This drawing is protected by copyright.

ALL DIMENSIONS ARE SHOWN IN IMPERIAL.

CONSULTANT:

WSP

PROJECT:

252 SOUTH STREET
NEW YORK, NY

DRAWING TITLE:

7TH, 16TH,25 TH FLOOR FRAMIMG PART PLAN

SEAL & SIGNATURE:

STATE OF NEW YORK — AHMAD RAHIMIAN — LICENSED PROFESSIONAL ENGINEER

DATE:	07/05/16
PROJECT No:	1302510
DRAWN:	CAD
CHK:	CL
SCALE:	As indicated
DWG No:	S-071.00
DOB PAGE No:	of

REV:

DOB EMPLOYEE STAMP:

DOB B-SCAN:

Tina Mathew, RA
APPROVED
Under Directive 2 of 1975
AMENDED APPLICATION
Date: 10/23/2017
NYC Development Hub

FILE NAME:
PLOT DATE:

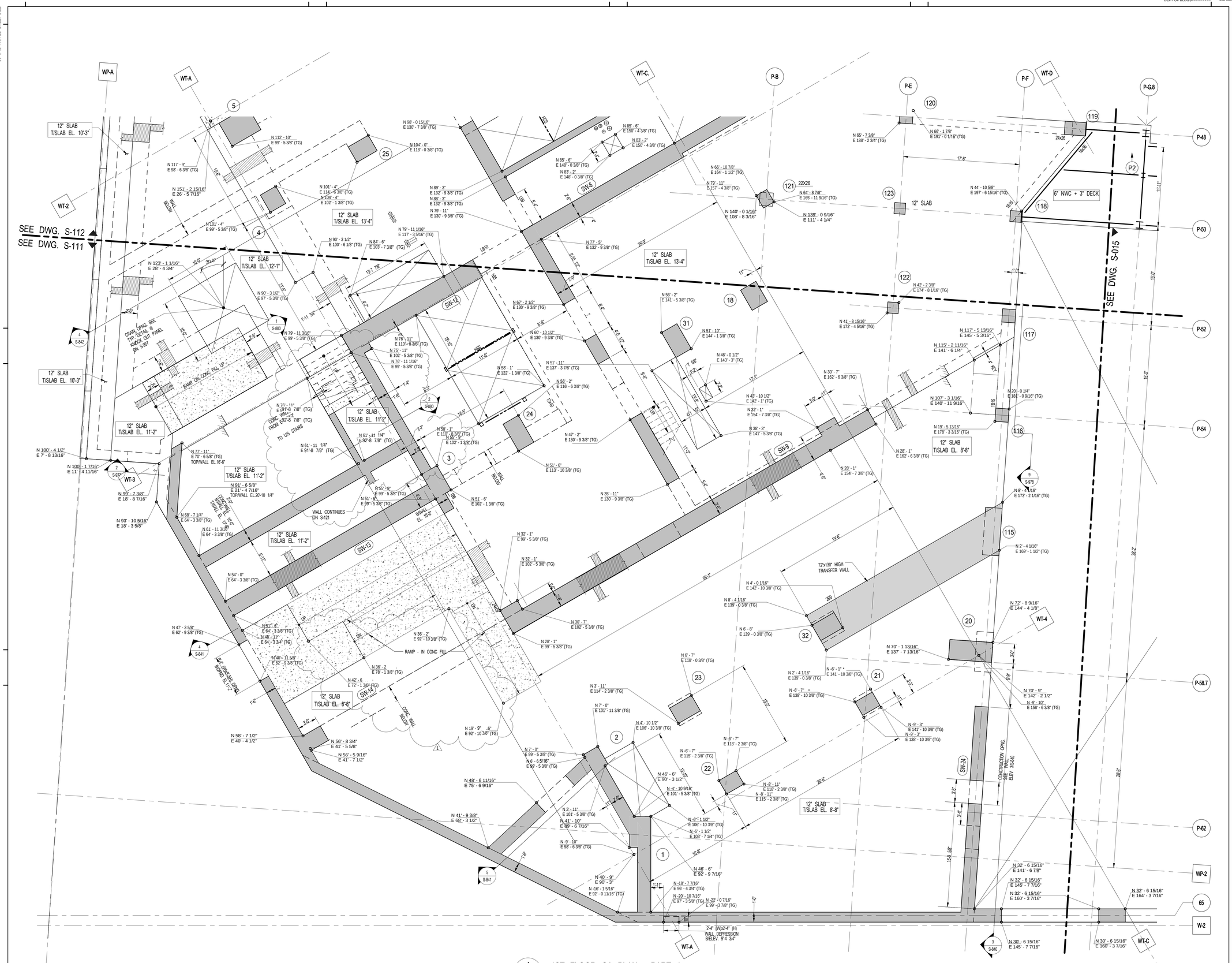

1 S-111 1ST FLOOR GA PLAN - PART 1

SCALE: 3/16" = 1'-0"

NOTES:

1. FOR BALANCE OF INFORMATION SEE CORRESPONDING OVERALL FRAMING PLAN

KEY PLAN:

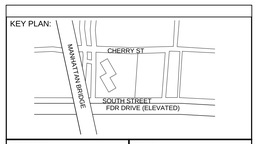

PROJECT NORTH

TRUE NORTH

DEVELOPER:
EXTELL DEVELOPMENT COMPANY
805 Third Ave, 7th Floor
New York, NY 10022
TEL: 212-712-6000 FAX: 212-712-6100

ARCHITECT OF RECORD:
AAI ARCHITECTS, P.C.
14 Wall Street, 2nd Floor
New York, NY 10005
TEL: 212-964-4040 FAX: 212-964-4090

INTERIOR DESIGNER:
MEYER DAVIS
180 Varick St, suite 404
New York, NY 10014
TEL: 212-627-5574

LANDSCAPE DESIGNER:
WEST 8 URBAN DESIGN & LANDSCAPE ARCHITECTURE P.C.
333 Hudson Street, Suite 905
New York, NY 10013
TEL: 212-285-0088 FAX: 212-285-0228

STRUCTURAL ENGINEERS:
WSP
228 East 45th Street
New York, NY 10017
TEL: 212-687-9888 FAX: 646-487-5501

MEP ENGINEERS:
ICOR ASSOCIATES, LLC
485 C Route 1 South, Suite 200
Iseline, NJ 08830
TEL: 908-272-3300 FAX: 908-272-4440

GEOTECHNICAL ENGINEERS:
LANGAN ENGINEERING & ENVIRONMENTAL SERVICES
21 Penn Plaza - 360 West 31st Street, 8th Floor
New York, NY 10001
TEL: 212.479.5400 FAX: 212.479.5444

No.	DESCRIPTION:	DATE:
	ADDENDUM #14	10-22-15
	ADDENDUM #15	11-18-15
	90% CONSTRUCTION DOCUMENTS	01-15-16
	ADDENDUM #16	02-04-16
	ASI #56	02-19-16
	ASI #58	03-04-16
	ISSUED FOR FILING	03-07-16
	ISSUE FOR CONSTRUCTION	03-18-16
1	ASI #65	05-20-16
	ISSUED FOR FILING	05-22-17

Discrepancies must be reported immediately to the Architect before proceeding. Only figured dimensions are to be used. Contractors must check all dimensions on site. This drawing is protected by copyright.

ALL DIMENSIONS ARE SHOWN IN IMPERIAL.

CONSULTANT:
WSP

PROJECT:
252 SOUTH STREET
NEW YORK, NY

DRAWING TITLE:
1ST FLOOR GA PLAN - PART 1

SEAL & SIGNATURE:
STATE OF NEW YORK
AHMAD RAHMAN
No. 065557
LICENSED PROFESSIONAL ENGINEER

DATE:	10/08/15
PROJECT No:	1302510
DRAWN: CAD	REV:
CHK: CL	
SCALE: As indicated	
DWG No:	S-111.01
DOB PAGE No:	of

DOB EMPLOYEE STAMP:
Tina Mathew, RA
APPROVED
Under Directive 2 of 1975
AMENDED APPLICATION
Date: 10/23/2017
NYC Development Hub

DOB B-SCAN:

30" x 42" Arch E1 - SHEET SIZE

FILE NAME:
PLOT DATE:

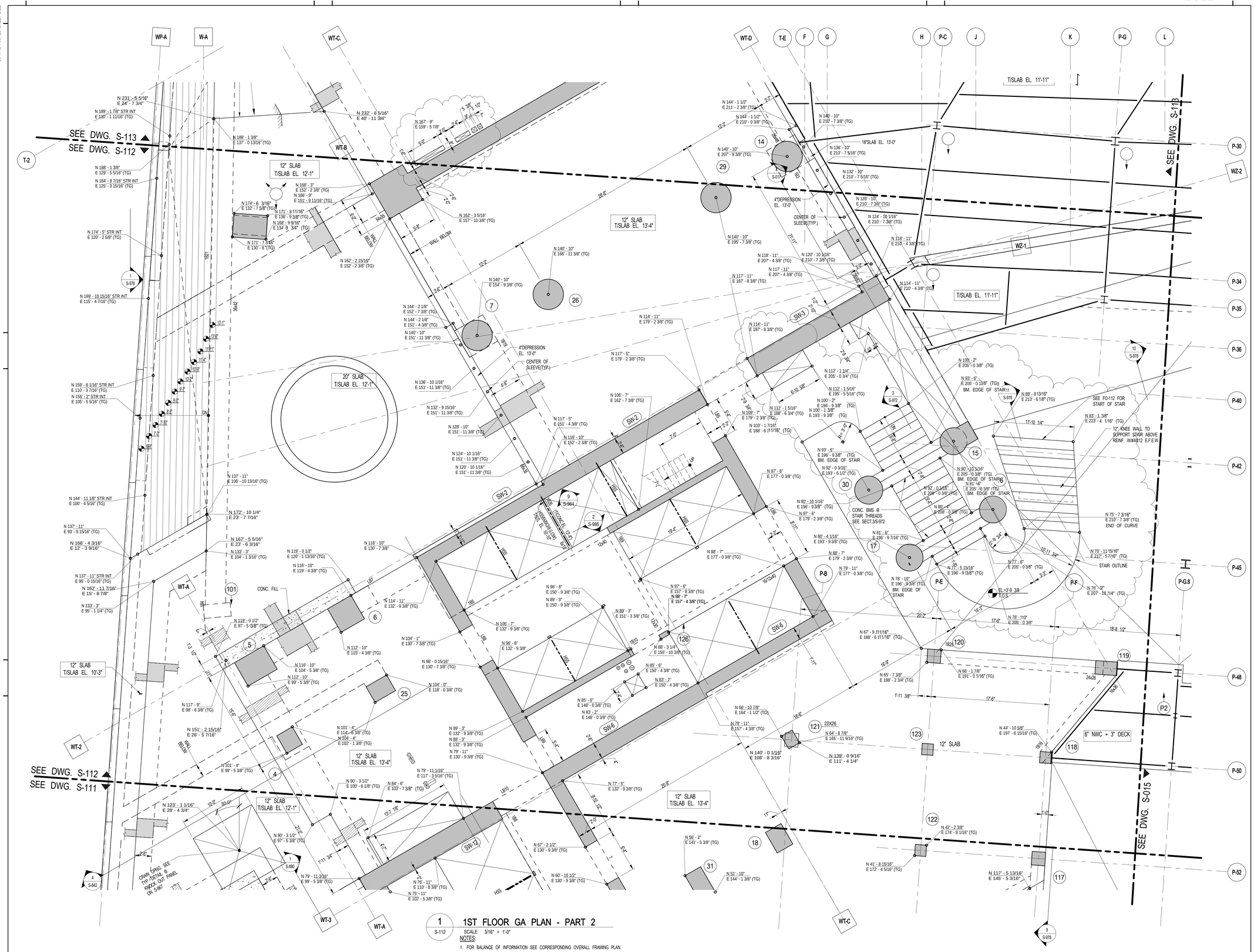

1 S-112 1ST FLOOR GA PLAN - PART 2

SCALE: 3/16" = 1'-0"

NOTES:

1. FOR BALANCE OF INFORMATION SEE CORRESPONDING OVERALL FRAMING PLAN

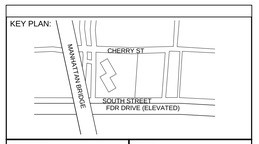

PROJECT NORTH

TRUE NORTH

DEVELOPER:
EXTELL DEVELOPMENT COMPANY
805 Third Ave, 7th Floor
New York, NY 10022
TEL: 212-712-6000 FAX: 212-712-6100

ARCHITECT OF RECORD:
AAI ARCHITECTS, P.C.
14 Wall Street, 2nd Floor
New York, NY 10005
TEL: 212-964-4040 FAX: 212-964-4090

INTERIOR DESIGNER:
MEYER DAVIS
180 Varick St, suite 404
New York, NY 10014
TEL: 212-627-5574

LANDSCAPE DESIGNER:
WEST 8 URBAN DESIGN & LANDSCAPE ARCHITECTURE P.C.
333 Hudson Street, Suite 905
New York, NY 10013
TEL: 212-285-0088 FAX: 212-285-0228

STRUCTURAL ENGINEERS:
WSP
228 East 45th Street
New York, NY 10017
TEL: 212-687-9888 FAX: 646-487-5501

MEP ENGINEERS:
ICOR ASSOCIATES, LLC
485 C Route 1 South, Suite 200
Iseline, NJ 08830
TEL: 908-272-3300 FAX: 908-272-4440

GEOTECHNICAL ENGINEERS:
LANGAN ENGINEERING & ENVIRONMENTAL SERVICES
21 Penn Plaza - 360 West 31st Street, 8th Floor
New York, NY 10001
TEL: 212.479.5400 FAX: 212.479.5444

No.	DESCRIPTION:	DATE:
	ADDENDUM #14	10-22-15
	ADDENDUM #15	11-18-15
	90% CONSTRUCTION DOCUMENTS	01-15-16
	ADDENDUM #16	02-04-16
	ASI #56	02-19-16
	ASI #58	03-04-16
	ISSUED FOR FILING	03-07-16
	ISSUE FOR CONSTRUCTION	03-18-16
1	ASI #67	06-17-16
2	ASI #71	07-29-16
	ISSUED FOR FILING	05-22-17

Discrepancies must be reported immediately to the Architect before proceeding. Only figured dimensions are to be used. Contractors must check all dimensions on site. This drawing is protected by copyright.

ALL DIMENSIONS ARE SHOWN IN IMPERIAL.

CONSULTANT:
WSP

PROJECT:
252 SOUTH STREET
NEW YORK, NY

DRAWING TITLE:
1ST FLOOR GA PLAN - PART 2

SEAL & SIGNATURE:
STATE OF NEW YORK · AHMAD RAHIMIAN · No. 065557 · LICENSED PROFESSIONAL ENGINEER

DATE:	10/09/15
PROJECT No:	1302510
DRAWN: CAD	REV:
CHK: CL	
SCALE: As indicated	
DWG No:	S-112.01
DOB PAGE No:	of

DOB EMPLOYEE STAMP:
Tina Mathew, RA
APPROVED
Under Directive 2 of 1975
AMENDED APPLICATION
Date: 10/23/2017
NYC Development Hub

DOB B-SCAN:

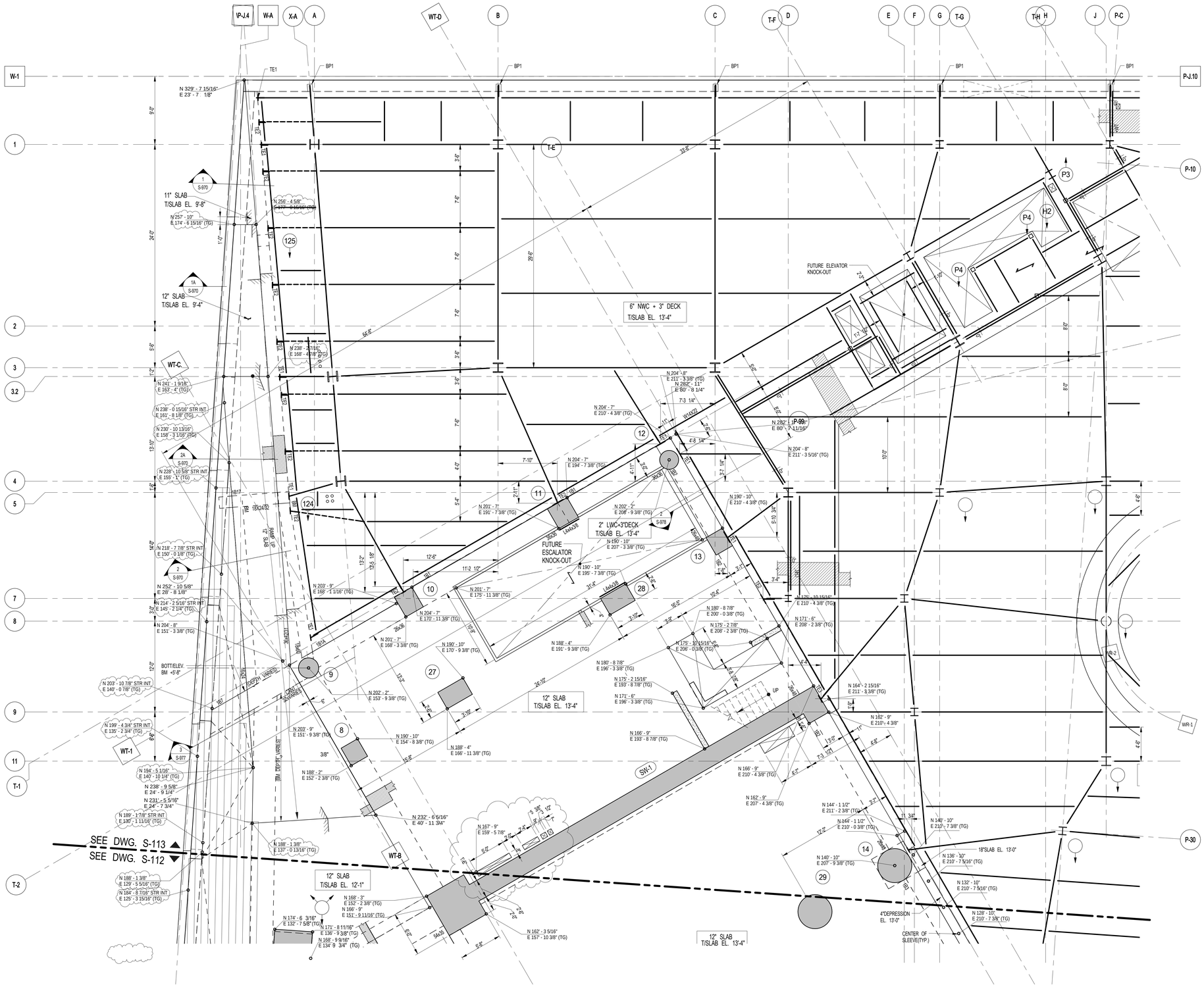

1 S-113 1ST FLOOR GA PLAN - PART3

SCALE: 3/16" = 1'-0"

NOTES:

1. FOR BALANCE OF INFORMATION SEE CORRESPONDING OVERALL FRAMING PLAN

KEY PLAN:

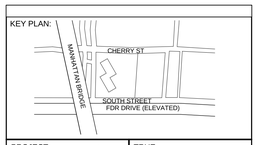

PROJECT NORTH

TRUE NORTH

DEVELOPER:
EXTELL DEVELOPMENT COMPANY
805 Third Ave, 7th Floor
New York, NY 10022
TEL: 212-712-6000 FAX: 212-712-6100

ARCHITECT OF RECORD:
AAI ARCHITECTS, P.C.
14 Wall Street, 2nd Floor
New York, NY 10005
TEL: 212-964-4040 FAX: 212-964-4090

INTERIOR DESIGNER:
MEYER DAVIS
180 Varick St, suite 404
New York, NY 10014
TEL: 212-627-5574

LANDSCAPE DESIGNER:
WEST 8 URBAN DESIGN & LANDSCAPE ARCHITECTURE P.C.
333 Hudson Street, Suite 905
New York, NY 10013
TEL: 212-285-0088 FAX: 212-285-0228

STRUCTURAL ENGINEERS:
WSP
228 East 45th Street
New York, NY 10017
TEL: 212-687-9888 FAX: 646-487-5501

MEP ENGINEERS:
ICOR ASSOCIATES, LLC
485 C Route 1 South, Suite 200
Iseline, NJ 08830
TEL: 908-272-3300 FAX: 908-272-4440

GEOTECHNICAL ENGINEERS:
LANGAN ENGINEERING & ENVIRONMENTAL SERVICES
21 Penn Plaza - 360 West 31st Street, 8th Floor
New York, NY 10001
TEL: 212.479.5400 FAX: 212.479.5444

No.	DESCRIPTION:	DATE:
	ADDENDUM #14	10-22-15
	ADDENDUM #15	11-18-15
	90% CONSTRUCTION DOCUMENTS	01-15-16
	ISSUED FOR FILING	03-07-16
	ISSUE FOR CONSTRUCTION	03-18-16
	ISSUED FOR FILING	05-22-17

Discrepancies must be reported immediately to the Architect before proceeding. Only figured dimensions are to be used. Contractors must check all dimensions on site. This drawing is protected by copyright.

ALL DIMENSIONS ARE SHOWN IN IMPERIAL.

CONSULTANT:
WSP

PROJECT:
252 SOUTH STREET
NEW YORK, NY

DRAWING TITLE:
1ST FLOOR GA PLAN - PART3

SEAL & SIGNATURE:

STATE OF NEW YORK · AHMAD RAHIMIAN · No. 065557 · LICENSED PROFESSIONAL ENGINEER

DATE:	10/09/15
PROJECT No:	1302510
DRAWN: CAD	REV:
CHK: CL	
SCALE: As indicated	
DWG No:	S-113.01
DOB PAGE No:	of

DOB EMPLOYEE STAMP:

Tina Mathew, RA
APPROVED
Under Directive 2 of 1975
AMENDED APPLICATION
Date: 10/23/2017
NYC Development Hub

DOB B-SCAN:

DEPT OF BLDGS121185539 Job Number
E161139610092 Scan Code
30" x 42" Anti El. SHEET SIZE

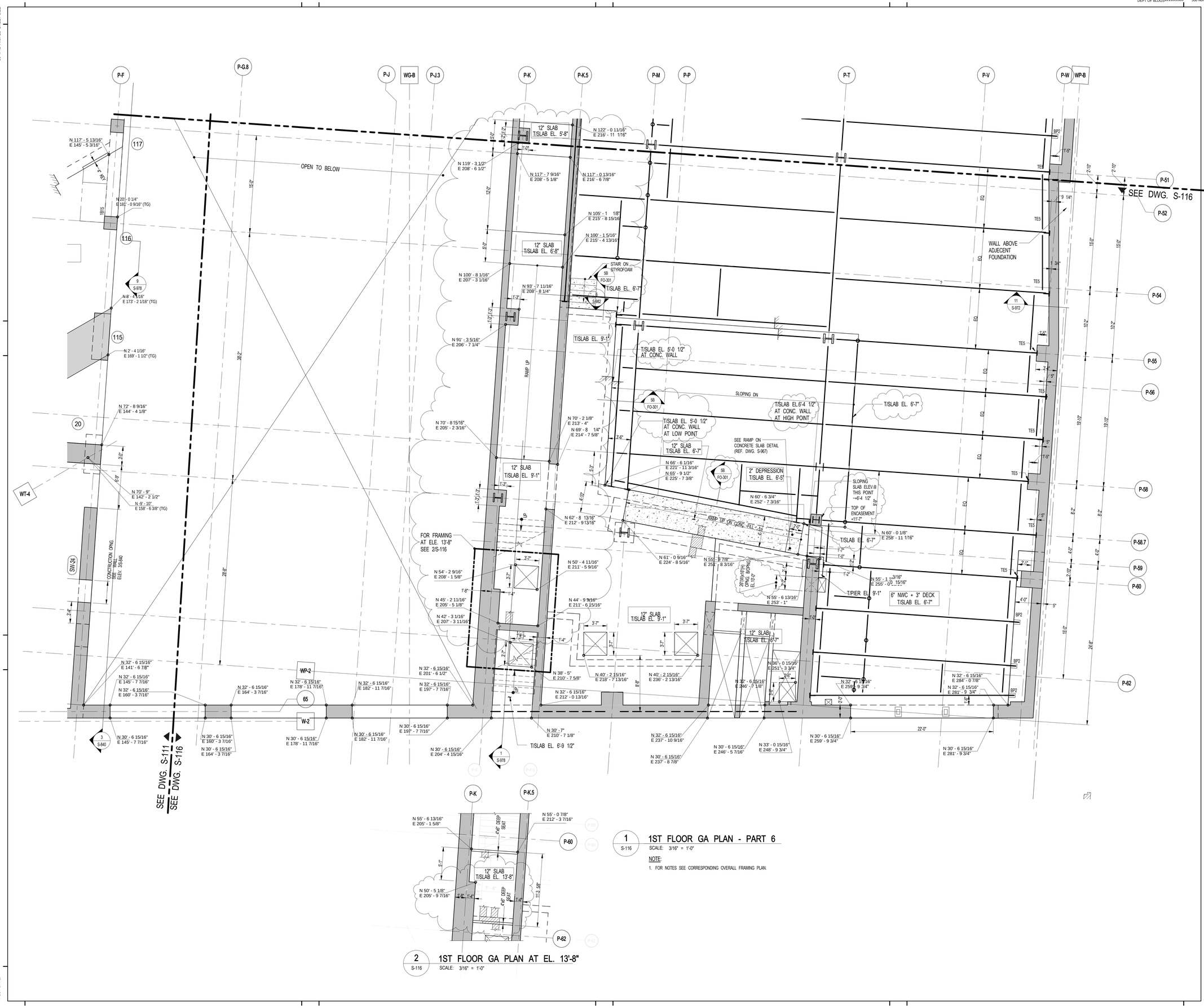

1 / S-116 — 1ST FLOOR GA PLAN - PART 6
SCALE: 3/16" = 1'-0"

NOTE:
1. FOR NOTES SEE CORRESPONDING OVERALL FRAMING PLAN.

2 / S-116 — 1ST FLOOR GA PLAN AT EL. 13'-8"
SCALE: 3/16" = 1'-0"

KEY PLAN:
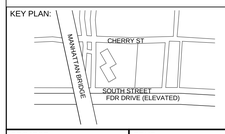

PROJECT NORTH
TRUE NORTH

DEVELOPER:
EXTELL DEVELOPMENT COMPANY
805 Third Ave, 7th Floor
New York, NY 10022
TEL: 212-712-6000 FAX: 212-712-6100

ARCHITECT OF RECORD:
AAI ARCHITECTS, P.C.
14 Wall Street, 2nd Floor
New York, NY 10005
TEL: 212-964-4040 FAX: 212-964-4090

INTERIOR DESIGNER:
MEYER DAVIS
180 Varick St, suite 404
New York, NY 10014
TEL: 212-627-5574

LANDSCAPE DESIGNER:
WEST 8 URBAN DESIGN & LANDSCAPE ARCHITECTURE P.C.
333 Hudson Street, Suite 905
New York, NY 10013
TEL: 212-285-0088 FAX: 212-285-0228

STRUCTURAL ENGINEERS:
WSP
228 East 45th Street
New York, NY 10017
TEL: 212-687-9888 FAX: 646-487-5501

MEP ENGINEERS:
ICOR ASSOCIATES, LLC
485 C Route 1 South, Suite 200
Iseline, NJ 08830
TEL: 908-272-3300 FAX: 908-272-4440

GEOTECHNICAL ENGINEERS:
LANGAN ENGINEERING & ENVIRONMENTAL SERVICES
21 Penn Plaza - 360 West 31st Street, 8th Floor
New York, NY 10001
TEL: 212.479.5400 FAX: 212.479.5444

No.	DESCRIPTION:	DATE:
	ADDENDUM #14	10-22-15
	ADDENDUM #16	02-04-16
	ASI #58	03-04-16
	ISSUED FOR FILING	03-07-16
	ASI#59	03-11-16
	ISSUED FOR FILING	05-22-17

Discrepancies must be reported immediately to the Architect before proceeding. Only figured dimensions are to be used. Contractors must check all dimensions on site. This drawing is protected by copyright.

ALL DIMENSIONS ARE SHOWN IN IMPERIAL.

CONSULTANT:
WSP

PROJECT:
252 SOUTH STREET
NEW YORK, NY

DRAWING TITLE:
1ST FLOOR GA PLAN - PART 6

SEAL & SIGNATURE:
STATE OF NEW YORK — AHMAD RAMADAN — No. 085027 — LICENSED PROFESSIONAL ENGINEER

DATE:	01/20/16
PROJECT No:	1302510
DRAWN: CAD	REV:
CHK: CL	
SCALE: As indicated	
DWG No:	**S-116.01**
DOB PAGE No:	of

DOB EMPLOYEE STAMP:
Tina Mathew, RA
APPROVED
Under Directive 2 of 1975
AMENDED APPLICATION
Date: 10/23/2017
NYC Development Hub

DOB B-SCAN:

FILE NAME:
PLOT DATE:

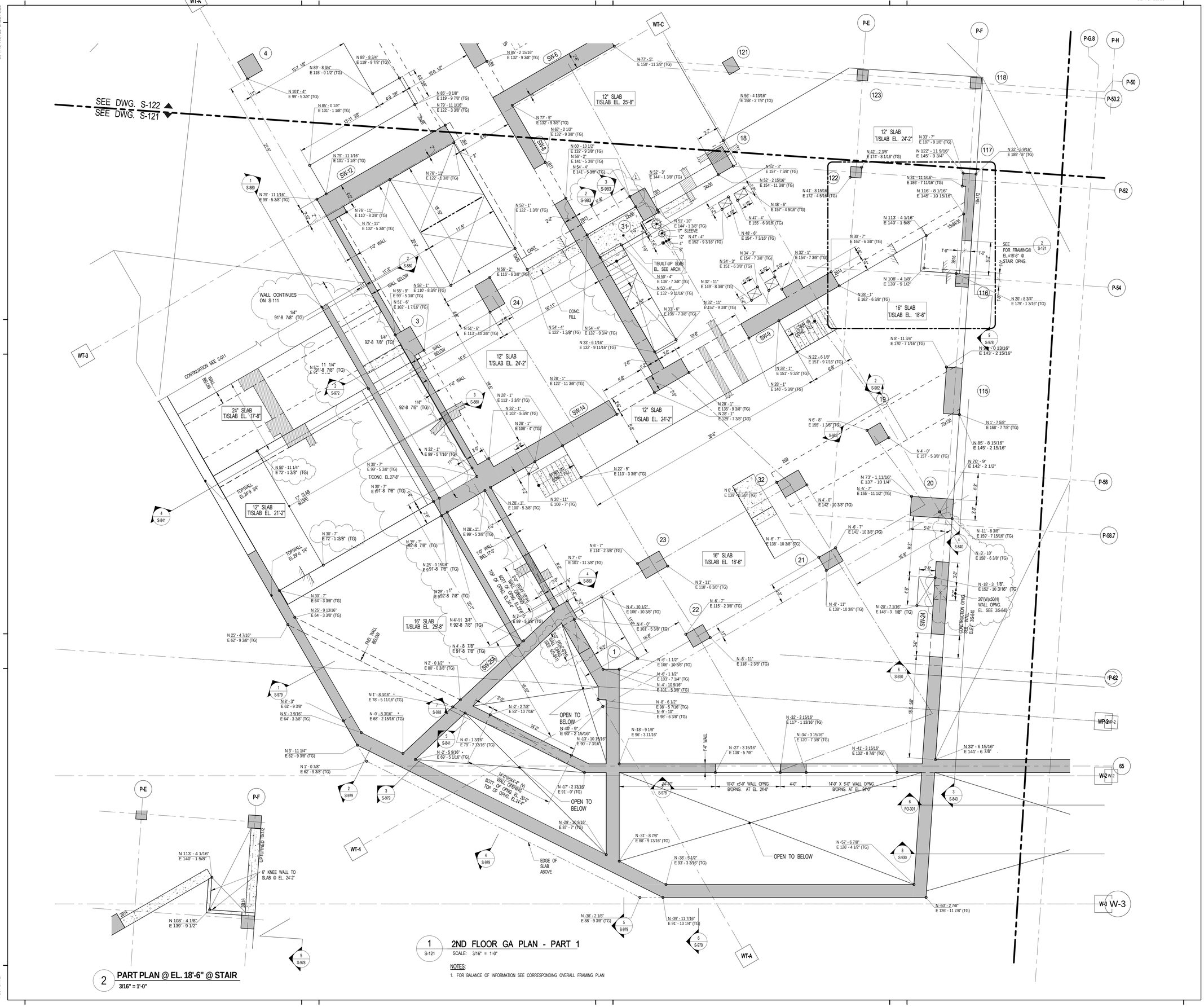

1 S-121 2ND FLOOR GA PLAN - PART 1

SCALE: 3/16" = 1'-0"

NOTES:

1. FOR BALANCE OF INFORMATION SEE CORRESPONDING OVERALL FRAMING PLAN

2 PART PLAN @ EL. 18'-6" @ STAIR

3/16" = 1'-0"

KEY PLAN:

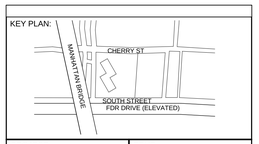

PROJECT NORTH

TRUE NORTH

DEVELOPER:
EXTELL DEVELOPMENT COMPANY
805 Third Ave, 7th Floor
New York, NY 10022
TEL: 212-712-6000 FAX: 212-712-6100

ARCHITECT OF RECORD:
AAI ARCHITECTS, P.C.
14 Wall Street, 2nd Floor
New York, NY 10005
TEL: 212-964-4040 FAX: 212-964-4090

INTERIOR DESIGNER:
MEYER DAVIS
180 Varick St, suite 404
New York, NY 10014
TEL: 212-627-5574

LANDSCAPE DESIGNER:
WEST 8 URBAN DESIGN & LANDSCAPE ARCHITECTURE P.C.
333 Hudson Street, Suite 905
New York, NY 10013
TEL: 212-285-0088 FAX: 212-285-0228

STRUCTURAL ENGINEERS:
WSP
228 East 45th Street
New York, NY 10017
TEL: 212-687-9888 FAX: 646-487-5501

MEP ENGINEERS:
ICOR ASSOCIATES, LLC
485 C Route 1 South, Suite 200
Iseline, NJ 08830
TEL: 908-272-3300 FAX: 908-272-4440

GEOTECHNICAL ENGINEERS:
LANGAN ENGINEERING & ENVIRONMENTAL SERVICES
21 Penn Plaza - 360 West 31st Street, 8th Floor
New York, NY 10001
TEL: 212.479.5400 FAX: 212.479.5444

No.	DESCRIPTION:	DATE:
	ADDENDUM #14	10-22-15
	ADDENDUM #15	11-18-15
	90% CONSTRUCTION DOCUMENTS	01-15-16
	ADDENDUM #16	02-04-16
	ASI #55	02-12-16
	ASI #56	02-19-16
	ASI #57	02-26-16
	ISSUED FOR FILING	03-07-16
	ASI#59	03-11-16
	ISSUE FOR CONSTRUCTION	03-18-16
1	ASI #65	05-20-16
	ISSUED FOR FILING	05-22-17

Discrepancies must be reported immediately to the Architect before proceeding. Only figured dimensions are to be used. Contractors must check all dimensions on site. This drawing is protected by copyright.

ALL DIMENSIONS ARE SHOWN IN IMPERIAL.

CONSULTANT:
WSP

PROJECT:
252 SOUTH STREET
NEW YORK, NY

DRAWING TITLE:
2ND FLOOR GA PLAN - PART 1

SEAL & SIGNATURE:

STATE OF NEW YORK · AHMAD RAHIMIAN · No. 065537 · LICENSED PROFESSIONAL ENGINEER

DATE:	10/12/15
PROJECT No:	1302510
DRAWN: CAD	REV:
CHK: CL	
SCALE: As indicated	
DWG No:	S-121.01
DOB PAGE No:	of

DOB EMPLOYEE STAMP:

Tina Mathew, RA
Building
APPROVED
Under Directive 2 of 1975
AMENDED APPLICATION
Date: 10/23/2017
NYC Development Hub

DOB B-SCAN:

DEPT OF BLDGS121185539 Job Number
E360958969041 Scan Code
30" x 42" Arch E1 SHEET SIZE

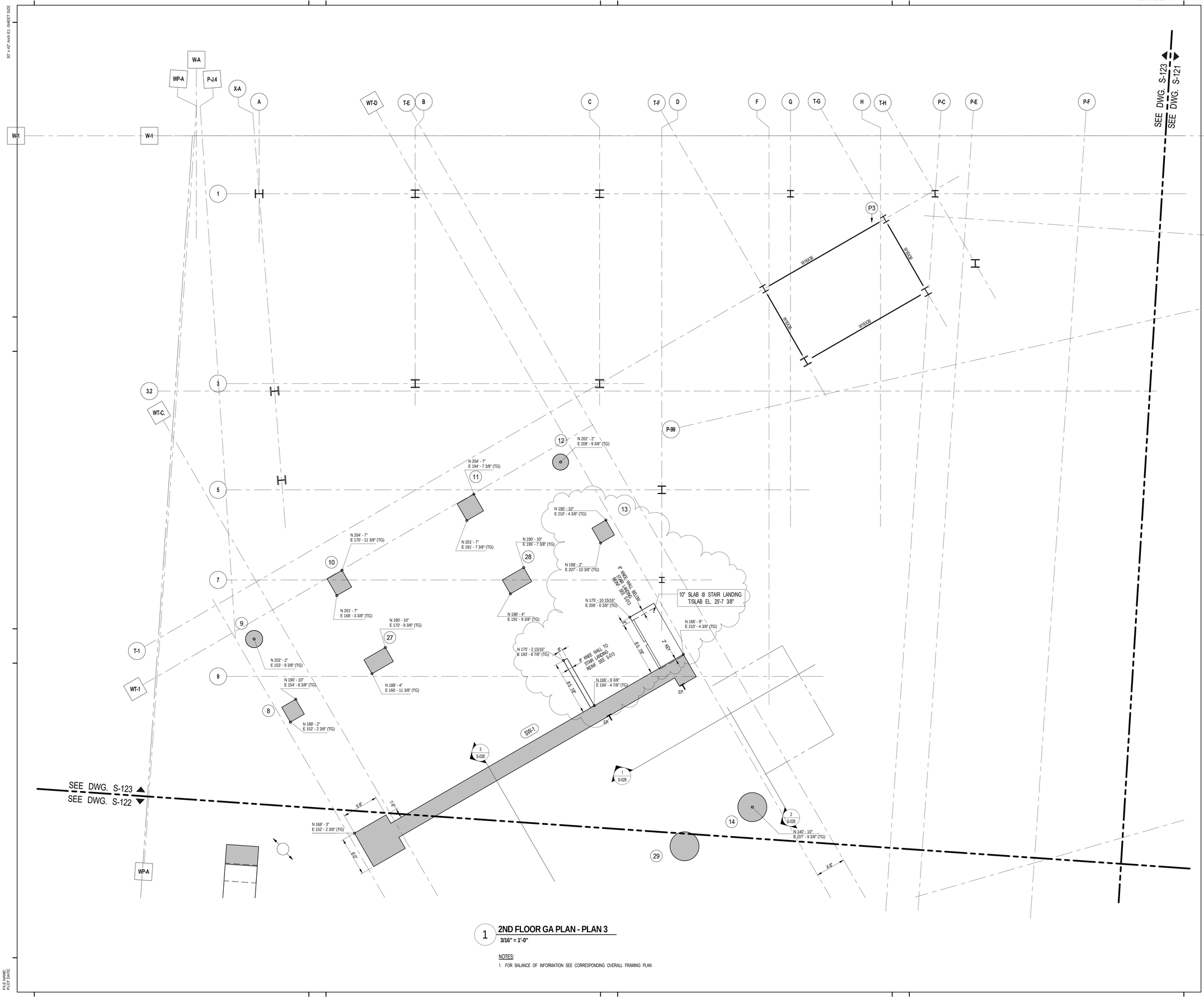

1 2ND FLOOR GA PLAN - PLAN 3

3/16" = 1'-0"

NOTES:

1. FOR BALANCE OF INFORMATION SEE CORRESPONDING OVERALL FRAMING PLAN

KEY PLAN:

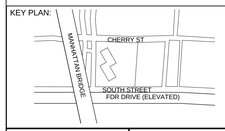

PROJECT NORTH

TRUE NORTH

DEVELOPER:
EXTELL DEVELOPMENT COMPANY
805 Third Ave, 7th Floor
New York, NY 10022
TEL: 212-712-6000 FAX: 212-712-6100

ARCHITECT OF RECORD:
AAI ARCHITECTS, P.C.
14 Wall Street, 2nd Floor
New York, NY 10005
TEL: 212-964-4040 FAX: 212-964-4090

INTERIOR DESIGNER:
MEYER DAVIS
180 Varick St, suite 404
New York, NY 10014
TEL: 212-627-5574

LANDSCAPE DESIGNER:
WEST 8 URBAN DESIGN & LANDSCAPE ARCHITECTURE P.C.
333 Hudson Street, Suite 905
New York, NY 10013
TEL: 212-285-0088 FAX: 212-285-0228

STRUCTURAL ENGINEERS:
WSP
228 East 45th Street
New York, NY 10017
TEL: 212-687-9888 FAX: 646-487-5501

MEP ENGINEERS:
ICOR ASSOCIATES, LLC
485 C Route 1 South, Suite 200
Iseline, NJ 08830
TEL: 908-272-3300 FAX: 908-272-4440

GEOTECHNICAL ENGINEERS:
LANGAN ENGINEERING & ENVIRONMENTAL SERVICES
21 Penn Plaza - 360 West 31st Street, 8th Floor
New York, NY 10001
TEL: 212.479.5400 FAX: 212.479.5444

No.	DESCRIPTION:	DATE:
	ASI #58	03-04-16
	ISSUED FOR FILING	03-07-16
	ISSUE FOR CONSTRUCTION	03-18-16
	ISSUED FOR FILING	05-22-17

Discrepancies must be reported immediately to the Architect before proceeding. Only figured dimensions are to be used. Contractors must check all dimensions on site. This drawing is protected by copyright.

ALL DIMENSIONS ARE SHOWN IN IMPERIAL.

CONSULTANT:
WSP

PROJECT:
252 SOUTH STREET
NEW YORK, NY

DRAWING TITLE:
2ND FLOOR GA PLAN - PART 3

SEAL & SIGNATURE:
STATE OF NEW YORK · AHMAD RAMADAN · LICENSED PROFESSIONAL ENGINEER · No. 085027

DATE:	12/28/15
PROJECT No:	1302510
DRAWN: CAD	REV:
CHK: CL	
SCALE: As indicated	
DWG No:	**S-123.01**
DOB PAGE No:	of

DOB EMPLOYEE STAMP:
Tina Mathew, RA
Buildings
APPROVED
Under Directive 2 of 1975
AMENDED APPLICATION
Date: 10/23/2017
NYC Development Hub

DOB B-SCAN:

FILE NAME:
PLOT DATE:

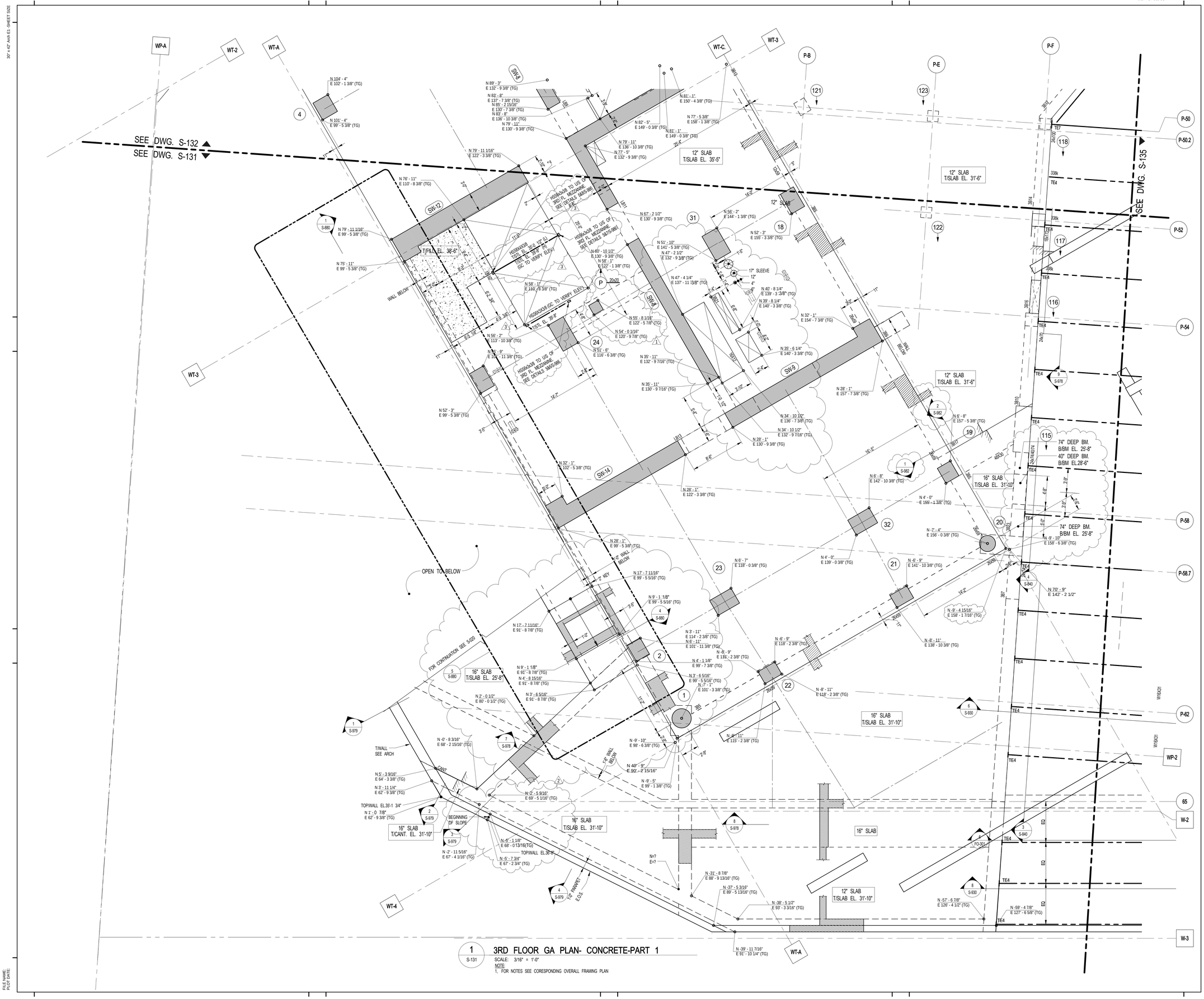

1 S-131 3RD FLOOR GA PLAN- CONCRETE-PART 1

SCALE: 3/16" = 1'-0"

NOTE:
1. FOR NOTES SEE CORESPONDING OVERALL FRAMING PLAN

KEY PLAN:

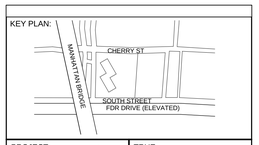

PROJECT NORTH | TRUE NORTH

DEVELOPER:
EXTELL DEVELOPMENT COMPANY
805 Third Ave, 7th Floor
New York, NY 10022
TEL: 212-712-6000 FAX: 212-712-6100

ARCHITECT OF RECORD:
AAI ARCHITECTS, P.C.
14 Wall Street, 2nd Floor
New York, NY 10005
TEL: 212-964-4040 FAX: 212-964-4090

INTERIOR DESIGNER:
MEYER DAVIS
180 Varick St, suite 404
New York, NY 10014
TEL: 212-627-5574

LANDSCAPE DESIGNER:
WEST 8 URBAN DESIGN & LANDSCAPE ARCHITECTURE P.C.
333 Hudson Street, Suite 905
New York, NY 10013
TEL: 212-285-0088 FAX: 212-285-0228

STRUCTURAL ENGINEERS:
WSP
228 East 45th Street
New York, NY 10017
TEL: 212-687-9888 FAX: 646-487-5501

MEP ENGINEERS:
ICOR ASSOCIATES, LLC
485 C Route 1 South, Suite 200
Iseline, NJ 08830
TEL: 908-272-3300 FAX: 908-272-4440

GEOTECHNICAL ENGINEERS:
LANGAN ENGINEERING & ENVIRONMENTAL SERVICES
21 Penn Plaza - 360 West 31st Street, 8th Floor
New York, NY 10001
TEL: 212.479.5400 FAX: 212.479.5444

No.	DESCRIPTION:	DATE:
	90% CONSTRUCTION DOCUMENTS	01-15-16
	ADDENDUM #16	02-04-16
	ASI #56	02-19-16
	ASI #58	03-04-16
	ISSUED FOR FILING	03-07-16
	ISSUE FOR CONSTRUCTION	03-18-16
1	ASI #62	04-29-16
2	ASI #65	05-20-16
3	ASI #71	07-29-16
	ISSUED FOR FILING	05-22-17

Discrepancies must be reported immediately to the Architect before proceeding. Only figured dimensions are to be used. Contractors must check all dimensions on site. This drawing is protected by copyright.

ALL DIMENSIONS ARE SHOWN IN IMPERIAL.

CONSULTANT:
WSP

PROJECT:
252 SOUTH STREET
NEW YORK, NY

DRAWING TITLE:
3RD FLOOR GA
FLOOR-CONCRETE- PART 1

SEAL & SIGNATURE:
STATE OF NEW YORK · AHMAD RAHMAN · No. 065537 · LICENSED PROFESSIONAL ENGINEER

DATE:	10/27/15
PROJECT No:	1302510
DRAWN: CAD	REV:
CHK: CL	
SCALE: As indicated	
DWG No:	S-131.01
DOB PAGE No:	of

DOB EMPLOYEE STAMP:
Tina Mathew, RA
APPROVED
Under Directive 2 of 1975
AMENDED APPLICATION
Date: 10/23/2017
NYC Development Hub

DOB B-SCAN:

DEPT OF BLDGS121185539 Job Number
IES3200204049 Scan Code

30" x 42" Arch E1 SHEET SIZE

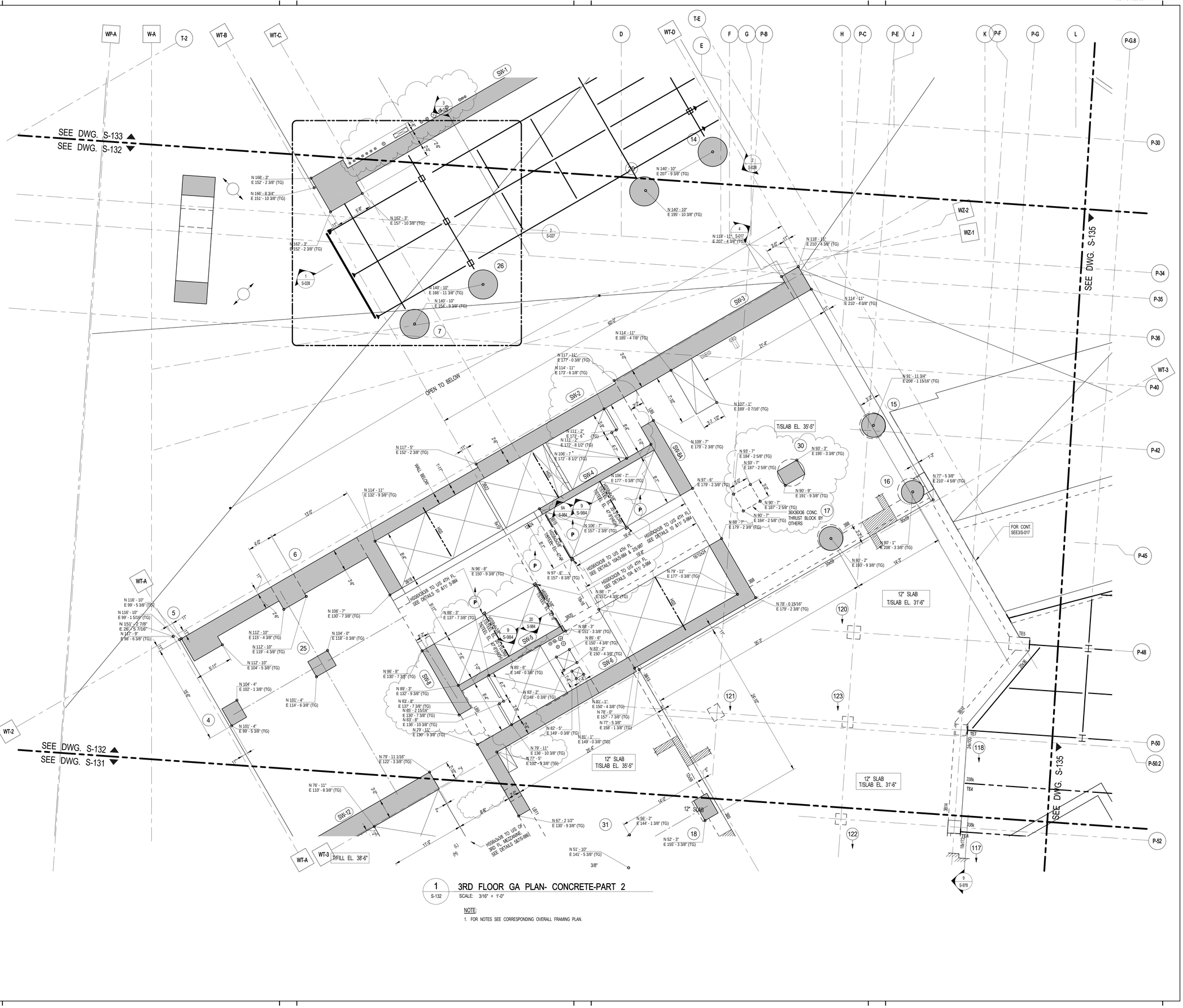

1 S-132 **3RD FLOOR GA PLAN- CONCRETE-PART 2**

SCALE: 3/16" = 1'-0"

NOTE:

1. FOR NOTES SEE CORRESPONDING OVERALL FRAMING PLAN.

KEY PLAN:

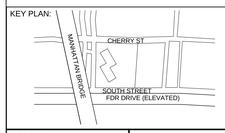

PROJECT NORTH

TRUE NORTH

DEVELOPER:
EXTELL DEVELOPMENT COMPANY
805 Third Ave, 7th Floor
New York, NY 10022
TEL: 212-712-6000 FAX: 212-712-6100

ARCHITECT OF RECORD:
AAI ARCHITECTS, P.C.
14 Wall Street, 2nd Floor
New York, NY 10005
TEL: 212-964-4040 FAX: 212-964-4090

INTERIOR DESIGNER:
MEYER DAVIS
180 Varick St, suite 404
New York, NY 10014
TEL: 212-627-5574

LANDSCAPE DESIGNER:
WEST 8 URBAN DESIGN & LANDSCAPE ARCHITECTURE P.C.
333 Hudson Street, Suite 905
New York, NY 10013
TEL: 212-285-0088 FAX: 212-285-0228

STRUCTURAL ENGINEERS:
WSP
228 East 45th Street
New York, NY 10017
TEL: 212-687-9888 FAX: 646-487-5501

MEP ENGINEERS:
ICOR ASSOCIATES, LLC
485 C Route 1 South, Suite 200
Iseline, NJ 08830
TEL: 908-272-3300 FAX: 908-272-4440

GEOTECHNICAL ENGINEERS:
LANGAN ENGINEERING & ENVIRONMENTAL SERVICES
21 Penn Plaza - 360 West 31st Street, 8th Floor
New York, NY 10001
TEL: 212.479.5400 FAX: 212.479.5444

No.	DESCRIPTION:	DATE:
	90% CONSTRUCTION DOCUMENTS	01-15-16
	ADDENDUM #16	02-04-16
	ASI #56	02-19-16
	ASI #57	02-26-16
	ASI #58	03-04-16
	ISSUED FOR FILING	03-07-16
	ISSUE FOR CONSTRUCTION	03-18-16
1	ASI#61	04-22-16
2	ASI #68	07-01-16
3	ASI #71	07-29-16
4	ASI #73	08-19-16
5	ISSUED FOR FILING	05-22-17

Discrepancies must be reported immediately to the Architect before proceeding. Only figured dimensions are to be used. Contractors must check all dimensions on site. This drawing is protected by copyright.

ALL DIMENSIONS ARE SHOWN IN IMPERIAL.

CONSULTANT:
WSP

PROJECT:
252 SOUTH STREET
NEW YORK, NY

DRAWING TITLE:
3RD FLOOR GA
FLOOR-CONCRETE- PART 2

SEAL & SIGNATURE:
STATE OF NEW YORK · AHMAD RAMZAN · No. 085527 · LICENSED PROFESSIONAL ENGINEER

DATE:	10/27/15
PROJECT No:	1302510
DRAWN: CAD	REV:
CHK: CL	
SCALE: As indicated	
DWG No:	**S-132.01**
DOB PAGE No:	of

DOB EMPLOYEE STAMP:
Tina Mathew, RA
Building
APPROVED
Under Directive 2 of 1975
AMENDED APPLICATION
Date: 10/23/2017
NYC Development Hub

DOB B-SCAN:

FILE NAME:
PLOT DATE:

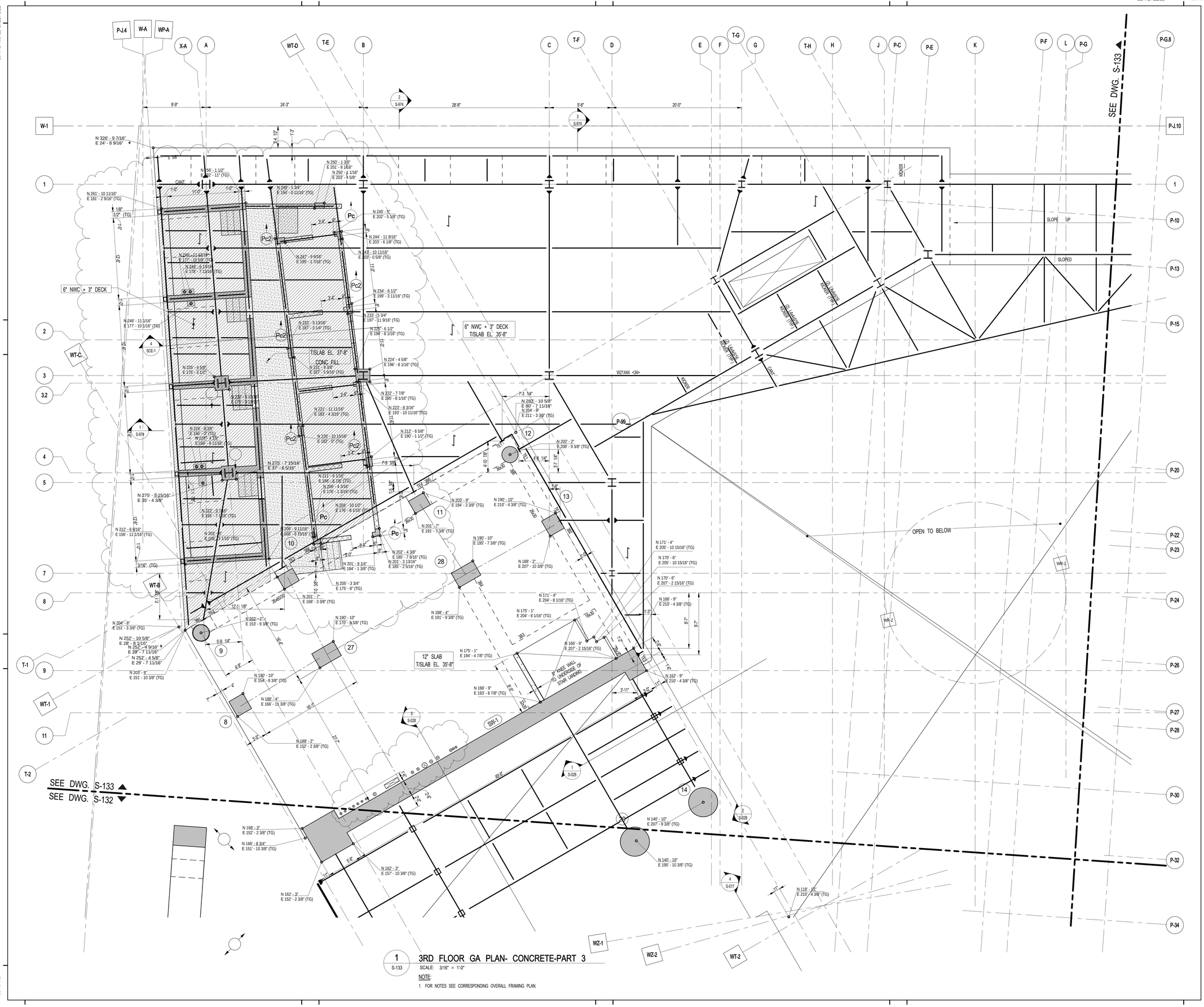

1 S-133 3RD FLOOR GA PLAN- CONCRETE-PART 3

SCALE: 3/16" = 1'-0"

NOTE:

1. FOR NOTES SEE CORRESPONDING OVERALL FRAMING PLAN.

KEY PLAN:

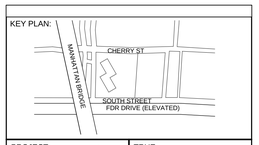

PROJECT NORTH

TRUE NORTH

DEVELOPER:
EXTELL DEVELOPMENT COMPANY
805 Third Ave, 7th Floor
New York, NY 10022
TEL: 212-712-6000 FAX: 212-712-6100

ARCHITECT OF RECORD:
AAI ARCHITECTS, P.C.
14 Wall Street, 2nd Floor
New York, NY 10005
TEL: 212-964-4040 FAX: 212-964-4090

INTERIOR DESIGNER:
MEYER DAVIS
180 Varick St, suite 404
New York, NY 10014
TEL: 212-627-5574

LANDSCAPE DESIGNER:
WEST 8 URBAN DESIGN & LANDSCAPE ARCHITECTURE P.C.
333 Hudson Street, Suite 905
New York, NY 10013
TEL: 212-285-0088 FAX: 212-285-0228

STRUCTURAL ENGINEERS:
WSP
228 East 45th Street
New York, NY 10017
TEL: 212-687-9888 FAX: 646-487-5501

MEP ENGINEERS:
ICOR ASSOCIATES, LLC
485 C Route 1 South, Suite 200
Iseline, NJ 08830
TEL: 908-272-3300 FAX: 908-272-4440

GEOTECHNICAL ENGINEERS:
LANGAN ENGINEERING & ENVIRONMENTAL SERVICES
21 Penn Plaza - 360 West 31st Street, 8th Floor
New York, NY 10001
TEL: 212.479.5400 FAX: 212.479.5444

No.	DESCRIPTION:	DATE:
	90% CONSTRUCTION DOCUMENTS	01-15-16
	ASI #56	02-19-16
	ASI #58	03-04-16
	ISSUED FOR FILING	03-07-16
	ISSUE FOR CONSTRUCTION	03-18-16
1	ASI #80	12-09-16
2	ASI #81	12-22-16
3	ISSUED FOR FILING	05-22-17

Discrepancies must be reported immediately to the Architect before proceeding. Only figured dimensions are to be used. Contractors must check all dimensions on site. This drawing is protected by copyright.

ALL DIMENSIONS ARE SHOWN IN IMPERIAL.

CONSULTANT:
WSP

PROJECT:
252 SOUTH STREET
NEW YORK, NY

DRAWING TITLE:
3RD FLOOR GA
FLOOR-CONCRETE- PART 3

SEAL & SIGNATURE:
STATE OF NEW YORK
AHMAD RAHIMIAN
No. 065537
LICENSED PROFESSIONAL ENGINEER

DATE:	10/27/15
PROJECT No:	1302510
DRAWN: CAD	REV:
CHK: CL	
SCALE: As indicated	
DWG No:	S-133.01
DOB PAGE No:	of

DOB EMPLOYEE STAMP:
Tina Mathew, RA
APPROVED
Under Directive 2 of 1975
AMENDED APPLICATION
Date: 10/23/2017
NYC Development Hub

DOB B-SCAN:

DEPT OF BLDGS121185539 Job Number
E350668320.f4 Scan Code

30" x 42" Arch E1 SHEET SIZE

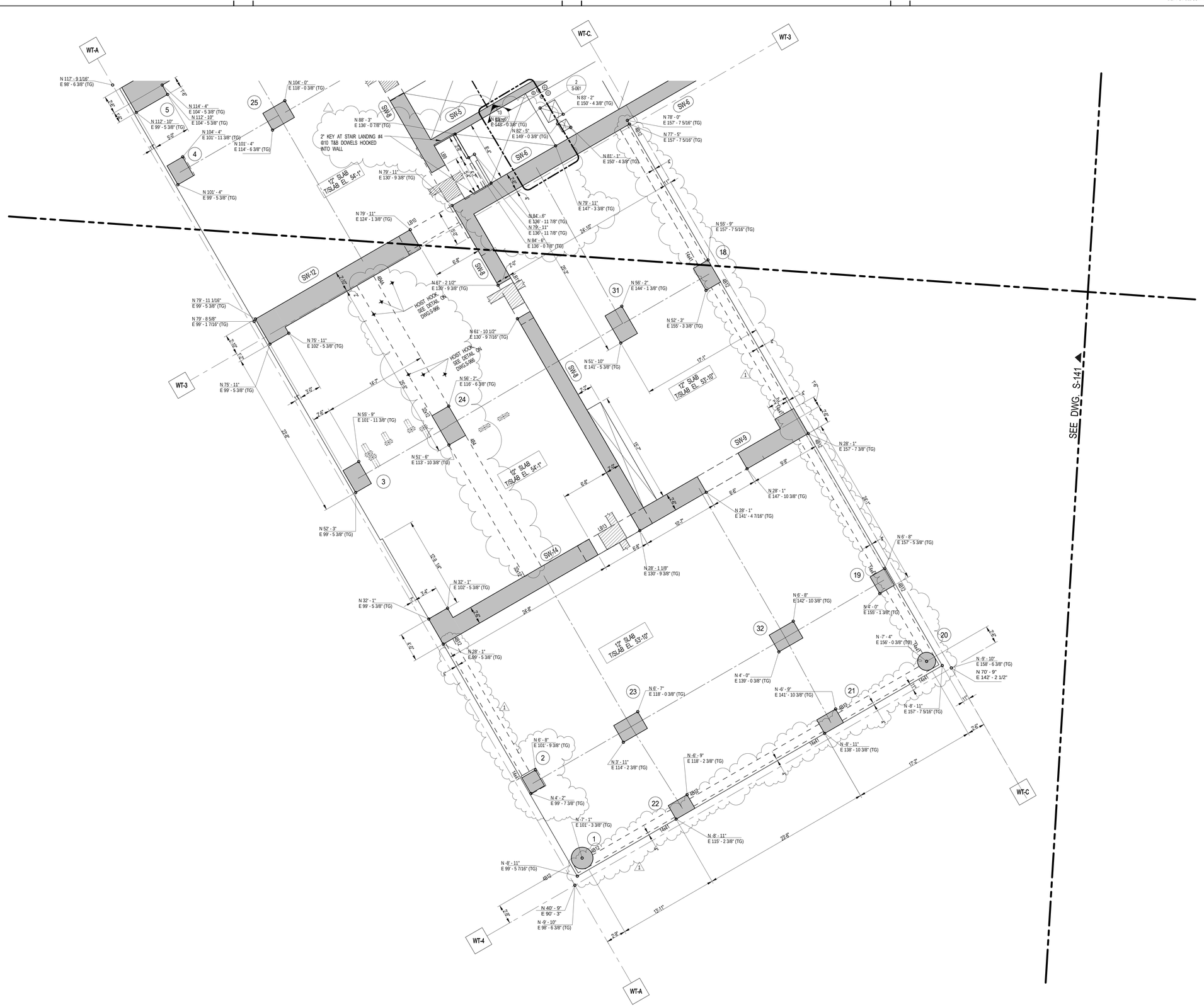

1 / S-141 — 4TH FLOOR GA PLAN - CONCRETE - PART 1

SCALE: 3/16" = 1'-0"

NOTE:

1. FOR NOTES SEE CORRESPONDING OVERALL FRAMING PLAN.

FILE NAME:
PLOT DATE:

KEY PLAN:

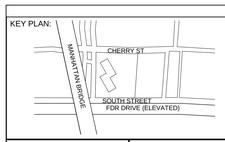

PROJECT NORTH

TRUE NORTH

DEVELOPER:
EXTELL DEVELOPMENT COMPANY
805 Third Ave, 7th Floor
New York, NY 10022
TEL: 212-712-6000 FAX: 212-712-6100

ARCHITECT OF RECORD:
AAI ARCHITECTS, P.C.
14 Wall Street, 2nd Floor
New York, NY 10005
TEL: 212-964-4040 FAX: 212-964-4090

INTERIOR DESIGNER:
MEYER DAVIS
180 Varick St, suite 404
New York, NY 10014
TEL: 212-627-5574

LANDSCAPE DESIGNER:
WEST 8 URBAN DESIGN & LANDSCAPE ARCHITECTURE P.C.
333 Hudson Street, Suite 905
New York, NY 10013
TEL: 212-285-0088 FAX: 212-285-0228

STRUCTURAL ENGINEERS:
WSP
228 East 45th Street
New York, NY 10017
TEL: 212-687-9888 FAX: 646-487-5501

MEP ENGINEERS:
ICOR ASSOCIATES, LLC
485 C Route 1 South, Suite 200
Iseline, NJ 08830
TEL: 908-272-3300 FAX: 908-272-4440

GEOTECHNICAL ENGINEERS:
LANGAN ENGINEERING & ENVIRONMENTAL SERVICES
21 Penn Plaza - 360 West 31st Street, 8th Floor
New York, NY 10001
TEL: 212.479.5400 FAX: 212.479.5444

No.	DESCRIPTION:	DATE:
	90% CONSTRUCTION DOCUMENTS	01-15-16
	ADDENDUM #16	02-04-16
	ASI #58	03-04-16
	ISSUED FOR FILING	03-07-16
	ISSUE FOR CONSTRUCTION	03-18-16
1	ASI #62	04-29-16
	ISSUED FOR FILING	05-22-17

Discrepancies must be reported immediately to the Architect before proceeding. Only figured dimensions are to be used. Contractors must check all dimensions on site. This drawing is protected by copyright.

ALL DIMENSIONS ARE SHOWN IN IMPERIAL.

CONSULTANT:
WSP

PROJECT:
252 SOUTH STREET
NEW YORK, NY

DRAWING TITLE:
4TH FLOOR GA PLAN-CONCRETE-PART 1

SEAL & SIGNATURE:

DATE:	10/29/15
PROJECT No:	1302510
DRAWN: CAD	REV:
CHK: CL	
SCALE: As indicated	

DWG No:
S-141.01

DOB PAGE No: of

DOB EMPLOYEE STAMP:

DOB B-SCAN:

1 S-142 4TH FLOOR GA PLAN - CONCRETE- PART 2

SCALE: 3/16" = 1'-0"

NOTE:

1. FOR NOTES SEE CORRESPONDING OVERALL FRAMING PLAN.

KEY PLAN:

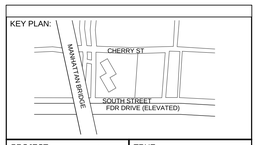

PROJECT NORTH

TRUE NORTH

DEVELOPER:
EXTELL DEVELOPMENT COMPANY
805 Third Ave, 7th Floor
New York, NY 10022
TEL: 212-712-6000 FAX: 212-712-6100

ARCHITECT OF RECORD:
AAI ARCHITECTS, P.C.
14 Wall Street, 2nd Floor
New York, NY 10005
TEL: 212-964-4040 FAX: 212-964-4090

INTERIOR DESIGNER:
MEYER DAVIS
180 Varick St, suite 404
New York, NY 10014
TEL: 212-627-5574

LANDSCAPE DESIGNER:
WEST 8 URBAN DESIGN & LANDSCAPE ARCHITECTURE P.C.
333 Hudson Street, Suite 905
New York, NY 10013
TEL: 212-285-0088 FAX: 212-285-0228

STRUCTURAL ENGINEERS:
WSP
228 East 45th Street
New York, NY 10017
TEL: 212-687-9888 FAX: 646-487-5501

MEP ENGINEERS:
ICOR ASSOCIATES, LLC
485 C Route 1 South, Suite 200
Iseline, NJ 08830
TEL: 908-272-3300 FAX: 908-272-4440

GEOTECHNICAL ENGINEERS:
LANGAN ENGINEERING & ENVIRONMENTAL SERVICES
21 Penn Plaza - 360 West 31st Street, 8th Floor
New York, NY 10001
TEL: 212.479.5400 FAX: 212.479.5444

No.	DESCRIPTION:	DATE:
	90% CONSTRUCTION DOCUMENTS	01-15-16
	ADDENDUM #16	02-04-16
	ASI #57	02-26-16
	ASI #58	03-04-16
	ISSUED FOR FILING	03-07-16
	ISSUE FOR CONSTRUCTION	03-18-16
1	ASI#61	04-22-16
2	ASI #62	04-29-16
3	ASI #63	05-06-16
4	ASI #64	05-13-16
5	ASI #68	07-01-16
6	ASI #73	08-19-16
7	ISSUED FOR FILING	05-22-17

Discrepancies must be reported immediately to the Architect before proceeding. Only figured dimensions are to be used. Contractors must check all dimensions on site. This drawing is protected by copyright.

ALL DIMENSIONS ARE SHOWN IN IMPERIAL.

CONSULTANT:
WSP

PROJECT:
252 SOUTH STREET
NEW YORK, NY

DRAWING TITLE:
4TH FLOOR GA PLAN-CONCRETE-PART 2

SEAL & SIGNATURE:
STATE OF NEW YORK · AHMAD RAHIMIAN · No. 065557 · LICENSED PROFESSIONAL ENGINEER

DATE:	10/29/15
PROJECT No:	1302510
DRAWN: CAD	REV:
CHK: CL	
SCALE: As indicated	
DWG No:	S-142.01
DOB PAGE No:	of

DOB EMPLOYEE STAMP:
Tina Mathew, RA
APPROVED
Under Directive 2 of 1975
AMENDED APPLICATION
Date: 10/23/2017
NYC Development Hub

DOB B-SCAN:

30" x 42" Arch E1 - SHEET SIZE

FILE NAME:
PLOT DATE:

DEPT OF BLDGS121105539 Job Number
E\344215799 Scan Code

30" x 42" Anh E1 SHEET SIZE

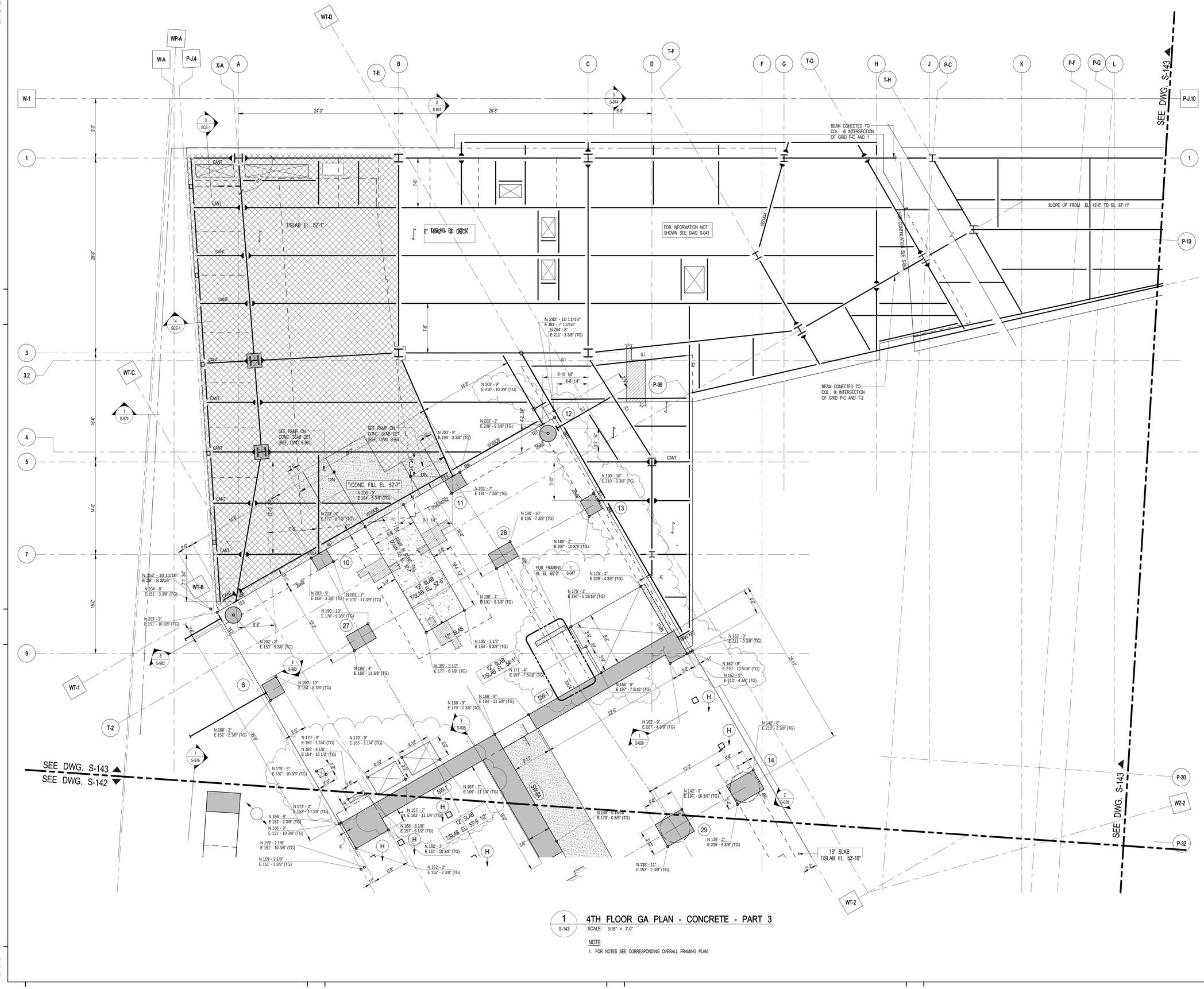

1 S-143 4TH FLOOR GA PLAN - CONCRETE - PART 3

SCALE: 3/16" = 1'-0"

NOTE:

1. FOR NOTES SEE CORRESPONDING OVERALL FRAMING PLAN.

FILE NAME:
PLOT DATE:

KEY PLAN:

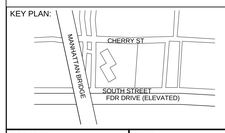

PROJECT NORTH

TRUE NORTH

DEVELOPER:
EXTELL DEVELOPMENT COMPANY
805 Third Ave, 7th Floor
New York, NY 10022
TEL: 212-712-6000 FAX: 212-712-6100

ARCHITECT OF RECORD:
AAI ARCHITECTS, P.C.
14 Wall Street, 2nd Floor
New York, NY 10005
TEL: 212-964-4040 FAX: 212-964-4090

INTERIOR DESIGNER:
MEYER DAVIS
180 Varick St, suite 404
New York, NY 10014
TEL: 212-627-5574

LANDSCAPE DESIGNER:
WEST 8 URBAN DESIGN & LANDSCAPE ARCHITECTURE P.C.
333 Hudson Street, Suite 905
New York, NY 10013
TEL: 212-285-0088 FAX: 212-285-0228

STRUCTURAL ENGINEERS:
WSP
228 East 45th Street
New York, NY 10017
TEL: 212-687-9888 FAX: 646-487-5501

MEP ENGINEERS:
ICOR ASSOCIATES, LLC
485 C Route 1 South, Suite 200
Iseline, NJ 08830
TEL: 908-272-3300 FAX: 908-272-4440

GEOTECHNICAL ENGINEERS:
LANGAN ENGINEERING & ENVIRONMENTAL SERVICES
21 Penn Plaza - 360 West 31st Street, 8th Floor
New York, NY 10001
TEL: 212.479.5400 FAX: 212.479.5444

No.	DESCRIPTION:	DATE:
	90% CONSTRUCTION DOCUMENTS	01-15-16
	ADDENDUM #16	02-04-16
	ASI #58	03-04-16
	ISSUED FOR FILING	03-07-16
	ASI#59	03-11-16
	ISSUE FOR CONSTRUCTION	03-18-16
1	ASI #63	05-06-16
2	ASI #64	05-13-16
3	ISSUED FOR FILING	05-22-17

Discrepancies must be reported immediately to the Architect before proceeding. Only figured dimensions are to be used. Contractors must check all dimensions on site. This drawing is protected by copyright.

ALL DIMENSIONS ARE SHOWN IN IMPERIAL.

CONSULTANT:
WSP

PROJECT:
252 SOUTH STREET
NEW YORK, NY

DRAWING TITLE:
4TH FLOOR GA PLAN-CONCRETE - PART 3

SEAL & SIGNATURE:
STATE OF NEW YORK · AHMAD RAHIMIAN · No. 065502 · LICENSED PROFESSIONAL ENGINEER

DATE:	10/29/15
PROJECT No:	1302510
DRAWN: CAD	REV:
CHK: CL	
SCALE: As indicated	
DWG No:	**S-143.01**
DOB PAGE No:	of

DOB EMPLOYEE STAMP:
Tina Mathew, RA
APPROVED
Under Directive 2 of 1975
AMENDED APPLICATION
Date: 10/23/2017
NYC Development Hub

DOB B-SCAN:

121185528 Job Number
ES586817428 Scan Code

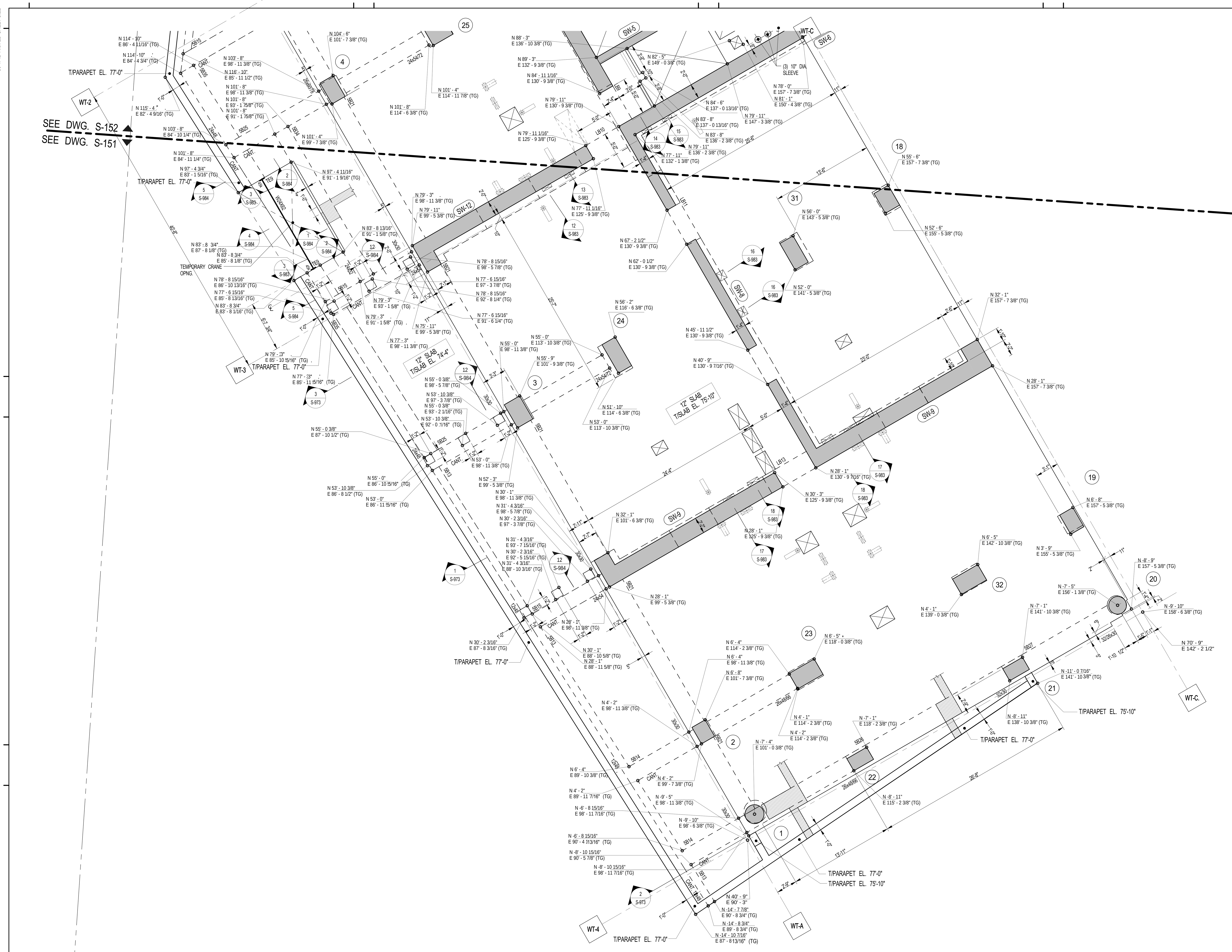

1 S-151
5TH FLOOR GA PLAN-CONCRETE- PART 1
SCALE: 3/16" = 1'-0"

NOTE:
1. FOR NOTES SEE CORRESPONDING OVERALL FRAMING PLAN.

KEY PLAN:

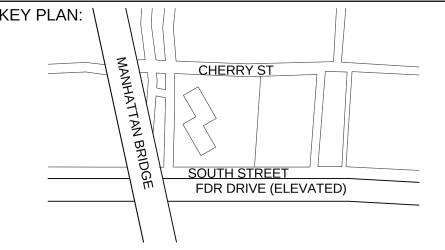

PROJECT NORTH | TRUE NORTH

DEVELOPER:
EXTELL DEVELOPMENT COMPANY
805 Third Ave, 7th Floor
New York, NY 10022
TEL: 212-712-6000 FAX: 212-712-6100

ARCHITECT OF RECORD:
AAI ARCHITECTS, P.C.
14 Wall Street, 2nd Floor
New York, NY 10005
TEL: 212-964-4040 FAX: 212-964-4090

INTERIOR DESIGNER:
MEYER DAVIS
180 Varick St, suite 404
New York, NY 10014
TEL: 212-627-5574

LANDSCAPE DESIGNER:
WEST 8 URBAN DESIGN & LANDSCAPE ARCHITECTURE P.C.
333 Hudson Street, Suite 905
New York, NY 10013
TEL: 212-285-0088 FAX: 212-285-0228

STRUCTURAL ENGINEERS:
WSP
228 East 45th Street
New York, NY 10017
TEL: 212-687-9888 FAX: 646-487-5501

MEP ENGINEERS:
ICOR ASSOCIATES, LLC
485 C Route 1 South, Suite 200
Iseline, NJ 08830
TEL: 908-272-3300 FAX: 908-272-4440

GEOTECHNICAL ENGINEERS:
LANGAN ENGINEERING & ENVIRONMENTAL SERVICES
21 Penn Plaza - 360 West 31st Street, 8th Floor
New York, NY 10001
TEL: 212.479.5400 FAX: 212.479.5444

No.	DESCRIPTION:	DATE:
	90% CONSTRUCTION DOCUMENTS	01-15-16
	ASI#59	03-11-16
	ISSUE FOR CONSTRUCTION	03-18-16
1	ASI #65	05-20-16
2	ASI #66	06-03-16
3	ASI #67	06-17-16
4	ASI #68	07-01-16
	ISSUED FOR FILING	05-22-17

Discrepancies must be reported immediately to the Architect before proceeding. Only figured dimensions are to be used. Contractors must check all dimensions on site. This drawing is protected by copyright.

ALL DIMENSIONS ARE SHOWN IN IMPERIAL.

CONSULTANT: WSP

PROJECT:
252 SOUTH STREET
NEW YORK, NY

DRAWING TITLE:
5TH FLOOR GA PLAN-CONCRETE-PART 1

SEAL & SIGNATURE: STATE OF NEW YORK, AHMAD RAHIMIAN, No. 065537, LICENSED PROFESSIONAL ENGINEER

DATE:	11/02/15
PROJECT No:	1302510
DRAWN:	CAD
CHK:	CL
SCALE:	As indicated
REV:	
DWG No:	S-151.00
DOB PAGE No:	of

DOB EMPLOYEE STAMP:
Tina Mathew, RA
APPROVED
Under Directive 2 of 1975
AMENDED APPLICATION
Date: 10/23/2017
NYC Development Hub

DOB B-SCAN:

30" x 42" Arch E1 - SHEET SIZE

FILE NAME:
PLOT DATE:

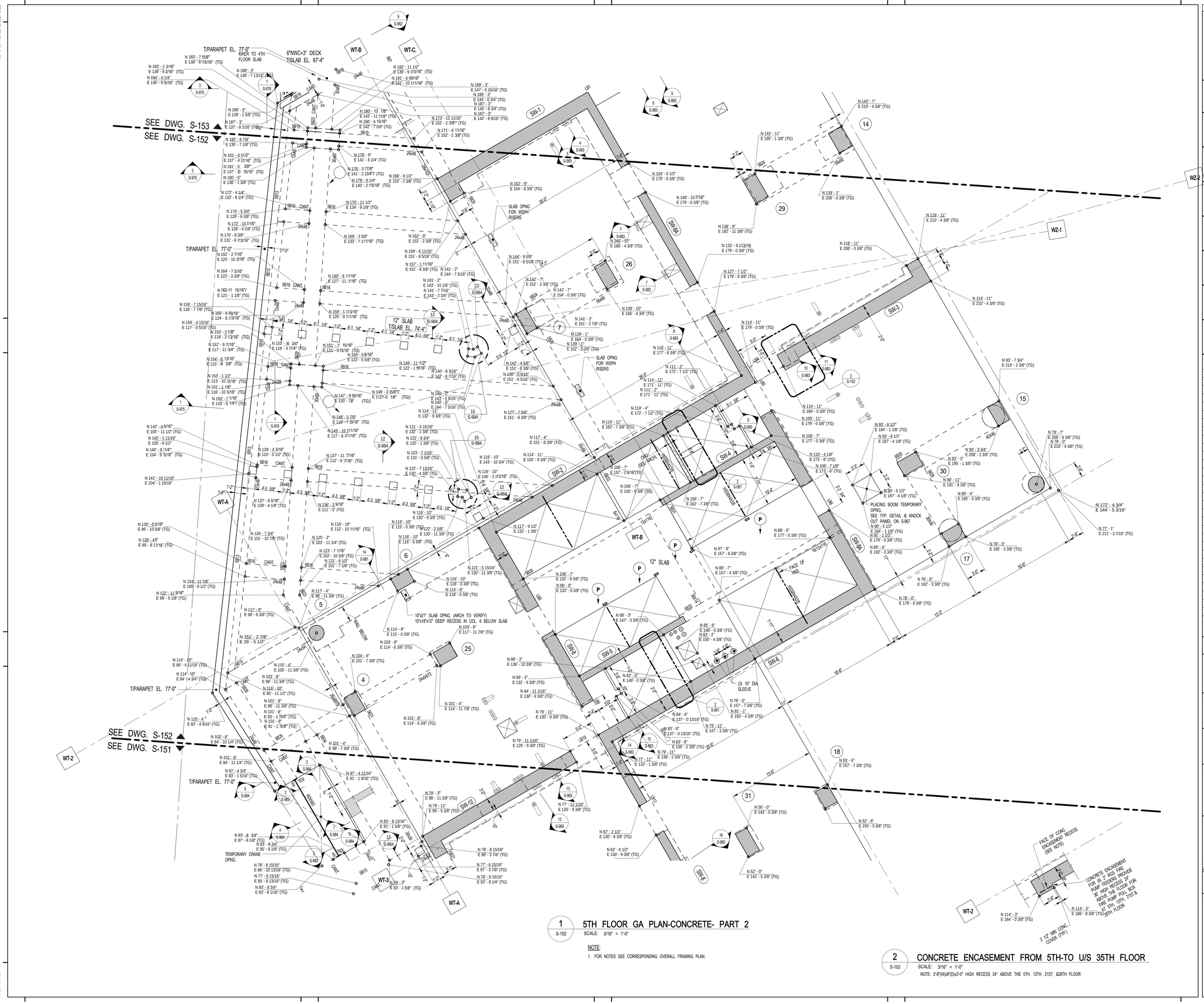

1 S-152 5TH FLOOR GA PLAN-CONCRETE- PART 2

SCALE: 3/16" = 1'-0"

NOTE:

1. FOR NOTES SEE CORRESPONDING OVERALL FRAMING PLAN.

2 S-152 CONCRETE ENCASEMENT FROM 5TH-TO U/S 35TH FLOOR

SCALE: 3/16" = 1'-0"

NOTE: 2'-8"(W)x8"(D)x3'-0" HIGH RECESS 24" ABOVE THE 5TH, 13TH, 21ST, &28TH FLOOR

KEY PLAN:

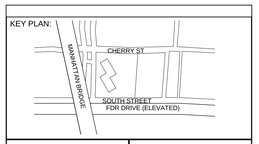

PROJECT NORTH | TRUE NORTH

DEVELOPER:
EXTELL DEVELOPMENT COMPANY
805 Third Ave, 7th Floor
New York, NY 10022
TEL: 212-712-6000 FAX: 212-712-6100

ARCHITECT OF RECORD:
AAI ARCHITECTS, P.C.
14 Wall Street, 2nd Floor
New York, NY 10005
TEL: 212-964-4040 FAX: 212-964-4090

INTERIOR DESIGNER:
MEYER DAVIS
180 Varick St, suite 404
New York, NY 10014
TEL: 212-627-5574

LANDSCAPE DESIGNER:
WEST 8 URBAN DESIGN & LANDSCAPE ARCHITECTURE P.C.
333 Hudson Street, Suite 905
New York, NY 10013
TEL: 212-285-0088 FAX: 212-285-0228

STRUCTURAL ENGINEERS:
WSP
228 East 45th Street
New York, NY 10017
TEL: 212-687-9888 FAX: 646-487-5501

MEP ENGINEERS:
ICOR ASSOCIATES, LLC
485 C Route 1 South, Suite 200
Iseline, NJ 08830
TEL: 908-272-3300 FAX: 908-272-4440

GEOTECHNICAL ENGINEERS:
LANGAN ENGINEERING & ENVIRONMENTAL SERVICES
21 Penn Plaza - 360 West 31st Street, 8th Floor
New York, NY 10001
TEL: 212.479.5400 FAX: 212.479.5444

No.	DESCRIPTION:	DATE:
	90% CONSTRUCTION DOCUMENTS	01-15-16
	ASI#59	03-11-16
	ISSUE FOR CONSTRUCTION	03-18-16
1	ASI #63	05-06-16
2	ASI #65	05-20-16
3	ASI #67	06-17-16
4	ASI #68	07-01-16
	ISSUED FOR FILING	05-22-17

Discrepancies must be reported immediately to the Architect before proceeding. Only figured dimensions are to be used. Contractors must check all dimensions on site. This drawing is protected by copyright.

ALL DIMENSIONS ARE SHOWN IN IMPERIAL.

CONSULTANT:
WSP

PROJECT:
252 SOUTH STREET
NEW YORK, NY

DRAWING TITLE:
5TH FLOOR GA PLAN-CONCRETE-PART 2

SEAL & SIGNATURE:
STATE OF NEW YORK · AHMAD RAHIMIAN · No. 065557 · LICENSED PROFESSIONAL ENGINEER

DATE:	11/02/15
PROJECT No:	1302510
DRAWN: CAD	REV:
CHK: CL	
SCALE: As indicated	
DWG No:	S-152.00
DOB PAGE No:	of

DOB EMPLOYEE STAMP:
Tina Mathew, RA
APPROVED
Under Directive 2 of 1975
AMENDED APPLICATION
Date: 10/23/2017
NYC Development Hub

DOB B-SCAN:

30" x 42" Arch E1 - SHEET SIZE

FILE NAME:
PLOT DATE:

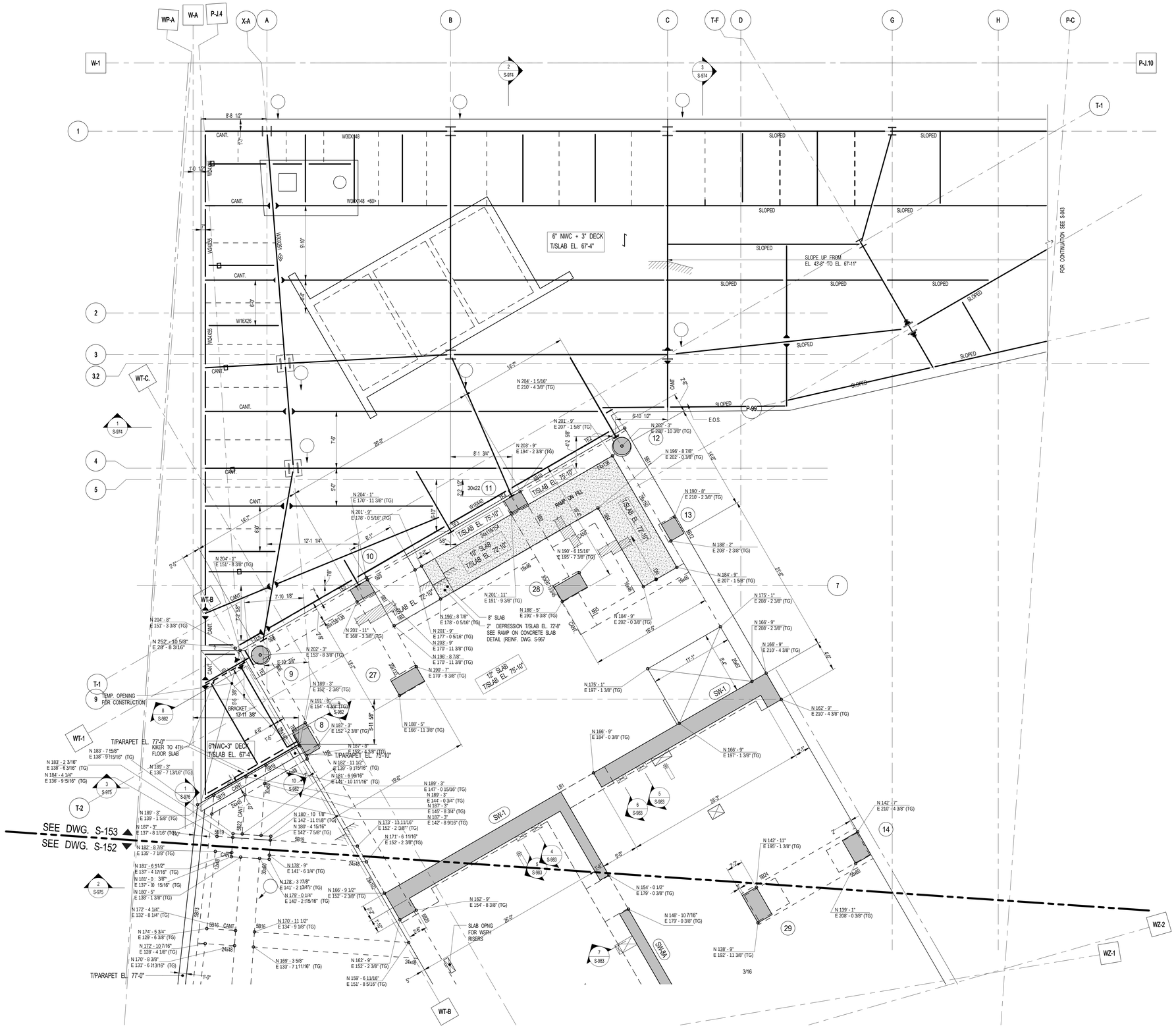

1 S-153 5TH FLOOR GA PLAN-CONCRETE- PART 3

SCALE: 3/16" = 1'-0"

NOTE:

1. FOR NOTES SEE CORRESPONDING OVERALL FRAMING PLAN.

KEY PLAN:

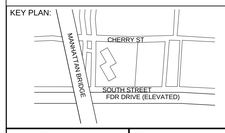

PROJECT NORTH

TRUE NORTH

DEVELOPER:
EXTELL DEVELOPMENT COMPANY
805 Third Ave, 7th Floor
New York, NY 10022
TEL: 212-712-6000 FAX: 212-712-6100

ARCHITECT OF RECORD:
AAI ARCHITECTS, P.C.
14 Wall Street, 2nd Floor
New York, NY 10005
TEL: 212-964-4040 FAX: 212-964-4090

INTERIOR DESIGNER:
MEYER DAVIS
180 Varick St, suite 404
New York, NY 10014
TEL: 212-627-5574

LANDSCAPE DESIGNER:
WEST 8 URBAN DESIGN & LANDSCAPE ARCHITECTURE P.C.
333 Hudson Street, Suite 905
New York, NY 10013
TEL: 212-285-0088 FAX: 212-285-0228

STRUCTURAL ENGINEERS:
WSP
228 East 45th Street
New York, NY 10017
TEL: 212-687-9888 FAX: 646-487-5501

MEP ENGINEERS:
ICOR ASSOCIATES, LLC
485 C Route 1 South, Suite 200
Iseline, NJ 08830
TEL: 908-272-3300 FAX: 908-272-4440

GEOTECHNICAL ENGINEERS:
LANGAN ENGINEERING & ENVIRONMENTAL SERVICES
21 Penn Plaza - 360 West 31st Street, 8th Floor
New York, NY 10001
TEL: 212.479.5400 FAX: 212.479.5444

No.	DESCRIPTION:	DATE:
	90% CONSTRUCTION DOCUMENTS	01-15-16
	ASI#59	03-11-16
	ISSUE FOR CONSTRUCTION	03-18-16
1	ASI #65	05-20-16
2	ASI #67	06-17-16
	ISSUED FOR FILING	05-22-17

Discrepancies must be reported immediately to the Architect before proceeding. Only figured dimensions are to be used. Contractors must check all dimensions on site. This drawing is protected by copyright.

ALL DIMENSIONS ARE SHOWN IN IMPERIAL.

CONSULTANT:
WSP

PROJECT:
252 SOUTH STREET
NEW YORK, NY

DRAWING TITLE:
5TH FLOOR GA PLAN-CONCRETE-PART 3

SEAL & SIGNATURE:
STATE OF NEW YORK · AHMAD RAHIMIAN · No. 065557 · LICENSED PROFESSIONAL ENGINEER

DATE:	11/02/15
PROJECT No:	1302510
DRAWN: CAD	REV:
CHK: CL	
SCALE: As indicated	
DWG No:	S-153.00
DOB PAGE No:	of

DOB EMPLOYEE STAMP:
Tina Mathew, RA
APPROVED
Under Directive 2 of 1975
AMENDED APPLICATION
Date: 10/23/2017
NYC Development Hub

DOB B-SCAN:

1 S-178 17TH-26TH FLOOR GENERAL ARRANGEMENT PLAN - PART 1

SCALE: 3/16" = 1'-0"

NOTES:

1. TOP OF SLAB ELEVATION TO BE

17TH FLOOR	198'-0"	U.O.N. ON PLAN
18TH FLOOR	208'-0"	
19TH FLOOR	218'-0"	
20TH FLOOR	228'-0"	
21ST FLOOR	238'-0"	
22ND FLOOR	248'-0"	
23RD FLOOR	258'-0"	
24TH FLOOR	268'-0"	
25TH FLOOR	278'-0"	
26TH FLOOR	288'-0"	

2. SLAB TO BE 9" THICK U.O.N. THUS ▭ ON PLAN.
3. FOR BALANCE OF NOTES SEE DRAWING S-010.

KEY PLAN:

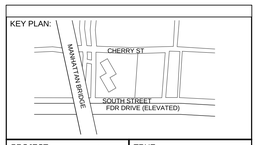

PROJECT NORTH

TRUE NORTH

DEVELOPER:
EXTELL DEVELOPMENT COMPANY
805 Third Ave, 7th Floor
New York, NY 10022
TEL: 212-712-6000 FAX: 212-712-6100

ARCHITECT OF RECORD:
AAI ARCHITECTS, P.C.
14 Wall Street, 2nd Floor
New York, NY 10005
TEL: 212-964-4040 FAX: 212-964-4090

INTERIOR DESIGNER:
MEYER DAVIS
180 Varick St, suite 404
New York, NY 10014
TEL: 212-627-5574

LANDSCAPE DESIGNER:
WEST 8 URBAN DESIGN & LANDSCAPE ARCHITECTURE P.C.
333 Hudson Street, Suite 905
New York, NY 10013
TEL: 212-285-0088 FAX: 212-285-0228

STRUCTURAL ENGINEERS:
WSP
228 East 45th Street
New York, NY 10017
TEL: 212-687-9888 FAX: 646-487-5501

MEP ENGINEERS:
ICOR ASSOCIATES, LLC
485 C Route 1 South, Suite 200
Iseline, NJ 08830
TEL: 908-272-3300 FAX: 908-272-4440

GEOTECHNICAL ENGINEERS:
LANGAN ENGINEERING & ENVIRONMENTAL SERVICES
21 Penn Plaza - 360 West 31st Street, 8th Floor
New York, NY 10001
TEL: 212.479.5400 FAX: 212.479.5444

No.	DESCRIPTION:	DATE:
	ASI#59	03-11-16
	ISSUE FOR CONSTRUCTION	03-18-16
1	ASI #67	06-17-16
2	ASI #70	07-15-16
3	ASI #71	07-29-16
	ISSUED FOR FILING	05-22-17

Discrepancies must be reported immediately to the Architect before proceeding. Only figured dimensions are to be used. Contractors must check all dimensions on site. This drawing is protected by copyright.

ALL DIMENSIONS ARE SHOWN IN IMPERIAL.

CONSULTANT:
WSP

PROJECT:
252 SOUTH STREET
NEW YORK, NY

DRAWING TITLE:
17TH-26TH FLOOR GENERAL ARRANGEMENT PLAN - PART 1

SEAL & SIGNATURE:
STATE OF NEW YORK
AHMAD RAHIMIAN
No. 065537
LICENSED PROFESSIONAL ENGINEER

DATE:	02/09/16
PROJECT No:	1302510
DRAWN: CAD	REV:
CHK: CL	
SCALE: As indicated	
DWG No:	S-178.00
DOB PAGE No:	of

DOB EMPLOYEE STAMP:
Tina Mathew, RA
APPROVED
Under Directive 2 of 1975
AMENDED APPLICATION
Date: 10/23/2017
NYC Development Hub

DOB B-SCAN:

30" x 42" Arch E1 - SHEET SIZE

FILE NAME:
PLOT DATE:

DEPT OF BLDGS121185539 Job Number
E139924/49321 Scan Code

30" x 42" Arch E1 - SHEET SIZE

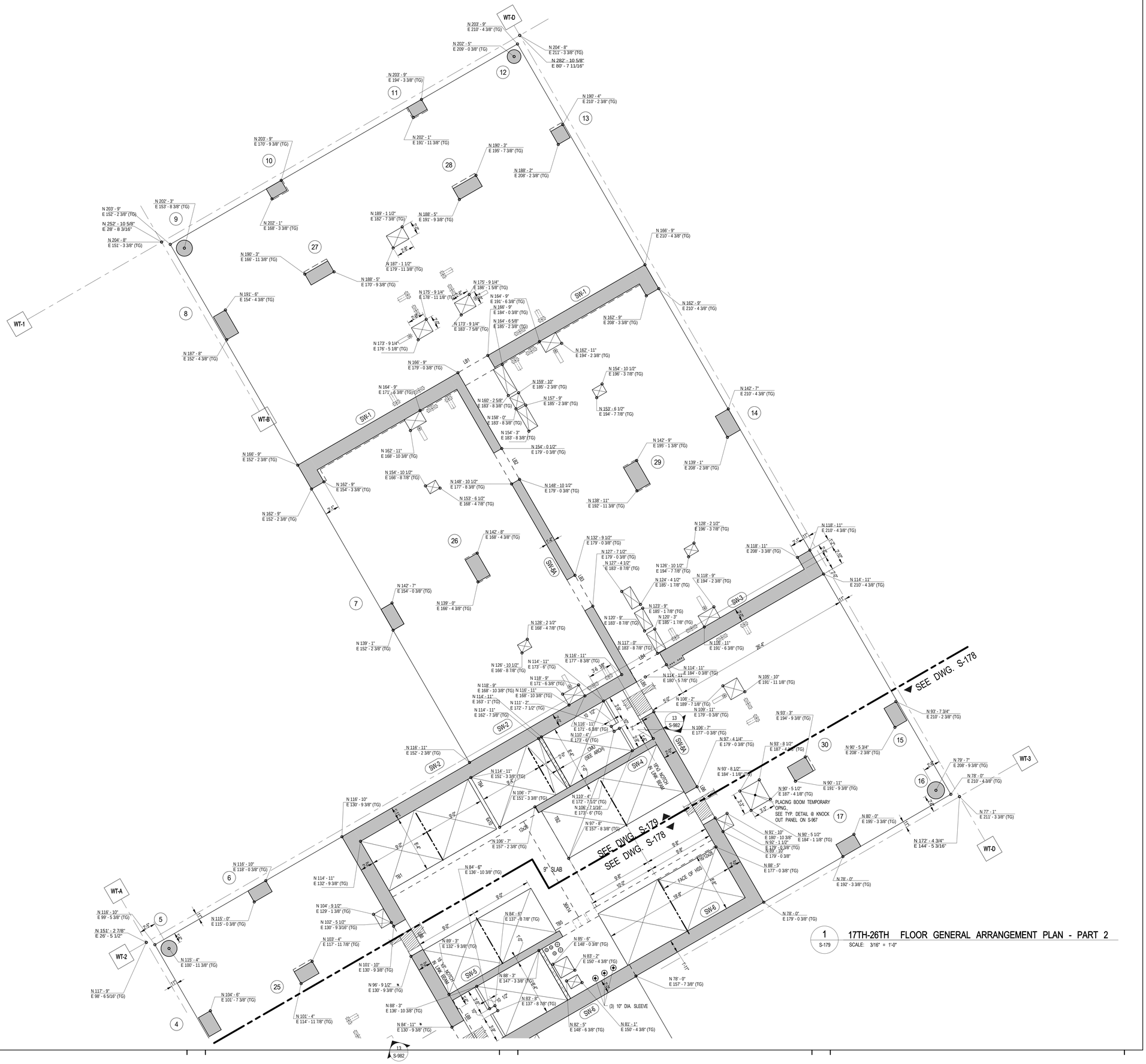

KEY PLAN:

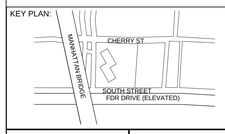

PROJECT NORTH

TRUE NORTH

DEVELOPER:
EXTELL DEVELOPMENT COMPANY
805 Third Ave, 7th Floor
New York, NY 10022
TEL: 212-712-6000 FAX: 212-712-6100

ARCHITECT OF RECORD:
AAI ARCHITECTS, P.C.
14 Wall Street, 2nd Floor
New York, NY 10005
TEL: 212-964-4040 FAX: 212-964-4090

INTERIOR DESIGNER:
MEYER DAVIS
180 Varick St, suite 404
New York, NY 10014
TEL: 212-627-5574

LANDSCAPE DESIGNER:
WEST 8 URBAN DESIGN & LANDSCAPE ARCHITECTURE P.C.
333 Hudson Street, Suite 905
New York, NY 10013
TEL: 212-285-0088 FAX: 212-285-0228

STRUCTURAL ENGINEERS:
WSP
228 East 45th Street
New York, NY 10017
TEL: 212-687-9888 FAX: 646-487-5501

MEP ENGINEERS:
ICOR ASSOCIATES, LLC
485 C Route 1 South, Suite 200
Iseline, NJ 08830
TEL: 908-272-3300 FAX: 908-272-4440

GEOTECHNICAL ENGINEERS:
LANGAN ENGINEERING & ENVIRONMENTAL SERVICES
21 Penn Plaza - 360 West 31st Street, 8th Floor
New York, NY 10001
TEL: 212.479.5400 FAX: 212.479.5444

No.	DESCRIPTION:	DATE:
	ASI#59	03-11-16
	ISSUE FOR CONSTRUCTION	03-18-16
1	ASI #67	06-17-16
2	ASI #70	07-15-16
	ISSUED FOR FILING	05-22-17

Discrepancies must be reported immediately to the Architect before proceeding. Only figured dimensions are to be used. Contractors must check all dimensions on site. This drawing is protected by copyright.

ALL DIMENSIONS ARE SHOWN IN IMPERIAL.

CONSULTANT:
WSP

PROJECT:
252 SOUTH STREET
NEW YORK, NY

DRAWING TITLE:
17TH-26TH FLOOR GENERAL ARRANGEMENT PLAN - PART 2

SEAL & SIGNATURE:
STATE OF NEW YORK · ARMAND RANUCCI · No. 065052 · LICENSED PROFESSIONAL ENGINEER

DATE:	02/09/16
PROJECT No:	1302510
DRAWN: CAD	REV:
CHK: CL	
SCALE: 3/16" = 1'-0"	
DWG No:	S-179.00
DOB PAGE No:	of

DOB EMPLOYEE STAMP:
Tina Mathew, RA
APPROVED
Under Directive 2 of 1975
AMENDED APPLICATION
Date: 10/23/2017
NYC Development Hub

DOB B-SCAN:

FILE NAME:
PLOT DATE:

DEPT OF BLDGS121185539 Job Number
E574690F837 Scan Code
30" x 42" Arch E1 - SHEET SIZE

1 S-270 — 27TH FLOOR (MECAHANICAL) FRAMING PLAN

SCALE: 3/32" = 1'-0"

NOTES:

1. TOP OF SLAB ELEVATION TO BE 301'-2" U.O.N. ON PLAN.
2. SLAB TO BE 12" THICK U.O.N. THUS ON PLAN.
3. TOP & BOTTOM REINFORCEMENT TO BE #5@12 CONT. E.W. FOR 12" SLAB U.O.N. ON PLAN. FOR ADDITIONAL REIFORCEMENT SEE PLAN
4. FOR BALANCE OF NOTES SEE DRAWING S-010.
5. FOR STR. INTEGRITY REINF. ADD'L INFORMATION SEE S-965.

27TH FLOOR BEAM SCHEDULE

BEAM MARK	SIZE WIDTH	SIZE DEPTH	REINFORCEMENT BOTTOM CONTINUOUS	REINFORCEMENT TOP CONTINUOUS	STIRRUPS TYPE	STIRRUPS SIZE	STIRRUPS SPACING	REMARKS
27B1	12	46	2-#10	2-#9	1	#4	@12	#4@10 HORIZ E.F. CONT.
27B2	36	17	7-#9	7-#7	2	#4	@6	
27B3	16/12	40	2-#10	2-#9	1	#4	@12	1-#10B & 1-#9 T ADD'L IN 16" WIDE BM; #4@10 HORIZ E.F. CONT.
27B4	6	18	1-#8	1-#8	1A	#4	@8	1-#8 MID-DEPTH

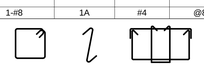

STIRRUP TYPES

KEY PLAN:

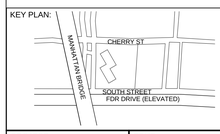

PROJECT NORTH

TRUE NORTH

DEVELOPER:
EXTELL DEVELOPMENT COMPANY
805 Third Ave, 7th Floor
New York, NY 10022
TEL: 212-712-6000 FAX: 212-712-6100

ARCHITECT OF RECORD:
AAI ARCHITECTS, P.C.
14 Wall Street, 2nd Floor
New York, NY 10005
TEL: 212-964-4040 FAX: 212-964-4090

INTERIOR DESIGNER:
MEYER DAVIS
180 Varick St, suite 404
New York, NY 10014
TEL: 212-627-5574

LANDSCAPE DESIGNER:
WEST 8 URBAN DESIGN & LANDSCAPE ARCHITECTURE P.C.
333 Hudson Street, Suite 905
New York, NY 10013
TEL: 212-285-0088 FAX: 212-285-0228

STRUCTURAL ENGINEERS:
WSP
228 East 45th Street
New York, NY 10017
TEL: 212-687-9888 FAX: 646-487-5501

MEP ENGINEERS:
ICOR ASSOCIATES, LLC
485 C Route 1 South, Suite 200
Iseline, NJ 08830
TEL: 908-272-3300 FAX: 908-272-4440

GEOTECHNICAL ENGINEERS:
LANGAN ENGINEERING & ENVIRONMENTAL SERVICES
21 Penn Plaza - 360 West 31st Street, 8th Floor
New York, NY 10001
TEL: 212.479.5400 FAX: 212.479.5444

No.	DESCRIPTION:	DATE:
	50% SD	02-28-14
	100%SD	04-25-14
	50% DD	08-01-14
	DESIGN DEVELOPMENT	10-07-14
	CONCRETE BID PACKAGE	03-06-15
	50% CONSTRUCTION DOCUMENTS	04-08-15
	ISSUED FOR FILING	07-28-15
	80% CONSTRUCTION DOCUMENTS	08-14-15
	ASI #13	08-26-15
1	ASI #73	08-19-16
2	ASI #76	10-28-16
3	ISSUED FOR FILING	05-22-17

Discrepancies must be reported immediately to the Architect before proceeding. Only figured dimensions are to be used. Contractors must check all dimensions on site. This drawing is protected by copyright.

ALL DIMENSIONS ARE SHOWN IN IMPERIAL.

CONSULTANT: WSP

PROJECT:
252 SOUTH STREET
NEW YORK, NY

DRAWING TITLE:
27TH FLOOR (MECHANICAL)
OVERALL FRAMING PLAN

SEAL & SIGNATURE:

DATE:	02/28/14
PROJECT No:	1302510
DRAWN: CAD	REV:
CHK: CL	
SCALE:	
DWG No:	**S-270.02**
DOB PAGE No:	of

DOB EMPLOYEE STAMP:

DOB B-SCAN:

FILE NAME:
PLOT DATE:

KEY PLAN:

PROJECT NORTH

TRUE NORTH

DEVELOPER:
EXTELL DEVELOPMENT COMPANY
805 Third Ave, 7th Floor
New York, NY 10022
TEL: 212-712-6000 FAX: 212-712-6100

ARCHITECT OF RECORD:
AAI ARCHITECTS, P.C.
14 Wall Street, 2nd Floor
New York, NY 10005
TEL: 212-964-4040 FAX: 212-964-4090

INTERIOR DESIGNER:
MEYER DAVIS
180 Varick St, suite 404
New York, NY 10014
TEL: 212-627-5574

LANDSCAPE DESIGNER:
WEST 8 URBAN DESIGN & LANDSCAPE ARCHITECTURE P.C.
333 Hudson Street, Suite 905
New York, NY 10013
TEL: 212-285-0088 FAX: 212-285-0228

STRUCTURAL ENGINEERS:
WSP
228 East 45th Street
New York, NY 10017
TEL: 212-687-9888 FAX: 646-487-5501

MEP ENGINEERS:
ICOR ASSOCIATES, LLC
485 C Route 1 South, Suite 200
Iseline, NJ 08830
TEL: 908-272-3300 FAX: 908-272-4440

GEOTECHNICAL ENGINEERS:
LANGAN ENGINEERING & ENVIRONMENTAL SERVICES
21 Penn Plaza - 360 West 31st Street, 8th Floor
New York, NY 10001
TEL: 212.479.5400 FAX: 212.479.5444

No.	DESCRIPTION:	DATE:
	DESIGN DEVELOPMENT	10-07-14
	CONCRETE BID PACKAGE	03-06-15
	50% CONSTRUCTION DOCUMENTS	04-08-15
	ISSUED FOR FILING	07-28-15
	80% CONSTRUCTION DOCUMENTS	08-14-15
	ISSUE FOR CONSTRUCTION	03-18-16
1	ASI #71	07-29-16
2	ASI #73	08-19-16
3	ASI #75	10-10-16
4	ASI #76	10-28-16
5	ISSUED FOR FILING	05-22-17

Discrepancies must be reported immediately to the Architect before proceeding. Only figured dimensions are to be used. Contractors must check all dimensions on site. This drawing is protected by copyright.

ALL DIMENSIONS ARE SHOWN IN IMPERIAL.

CONSULTANT: WSP

PROJECT:
252 SOUTH STREET
NEW YORK, NY

DRAWING TITLE:
27TH FLOOR (MECHANICAL) FRAMING PLAN - PART 1

SEAL & SIGNATURE:

DATE:	09/24/14
PROJECT No:	1302510
DRAWN:	CAD
CHK:	CL
SCALE:	
DWG No:	S-271.02
DOB PAGE No:	of

DOB EMPLOYEE STAMP:

Tina Mathew, RA
APPROVED
Under Directive 2 of 1975
AMENDED APPLICATION
Date: 10/23/2017
NYC Development Hub

DOB B-SCAN:

1 S-272 27TH FLOOR (MECAHANICAL) FRAMING PLAN - PART 2

SCALE: 3/16" = 1'-0"

NOTE:
1. FOR NOTES SEE CORESPONDING OVERALL FRAMING PLAN

KEY PLAN:

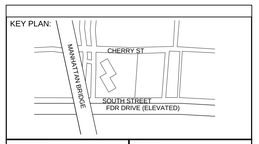

PROJECT NORTH

TRUE NORTH

DEVELOPER:
EXTELL DEVELOPMENT COMPANY
805 Third Ave, 7th Floor
New York, NY 10022
TEL: 212-712-6000 FAX: 212-712-6100

ARCHITECT OF RECORD:
AAI ARCHITECTS, P.C.
14 Wall Street, 2nd Floor
New York, NY 10005
TEL: 212-964-4040 FAX: 212-964-4090

INTERIOR DESIGNER:
MEYER DAVIS
180 Varick St, suite 404
New York, NY 10014
TEL: 212-627-5574

LANDSCAPE DESIGNER:
WEST 8 URBAN DESIGN & LANDSCAPE ARCHITECTURE P.C.
333 Hudson Street, Suite 905
New York, NY 10013
TEL: 212-285-0088 FAX: 212-285-0228

STRUCTURAL ENGINEERS:
WSP
228 East 45th Street
New York, NY 10017
TEL: 212-687-9888 FAX: 646-487-5501

MEP ENGINEERS:
ICOR ASSOCIATES, LLC
485 C Route 1 South, Suite 200
Iseline, NJ 08830
TEL: 908-272-3300 FAX: 908-272-4440

GEOTECHNICAL ENGINEERS:
LANGAN ENGINEERING & ENVIRONMENTAL SERVICES
21 Penn Plaza - 360 West 31st Street, 8th Floor
New York, NY 10001
TEL: 212.479.5400 FAX: 212.479.5444

No.	DESCRIPTION:	DATE:
	DESIGN DEVELOPMENT	10-07-14
	CONCRETE BID PACKAGE	03-06-15
	50% CONSTRUCTION DOCUMENTS	04-08-15
	ISSUED FOR FILING	07-28-15
	80% CONSTRUCTION DOCUMENTS	08-14-15
	ISSUE FOR CONSTRUCTION	03-18-16
1	ASI #71	07-29-16
2	ASI #73	08-19-16
3	ASI #75	10-10-16
4	ASI #76	10-28-16
5	ISSUED FOR FILING	05-22-17

Discrepancies must be reported immediately to the Architect before proceeding. Only figured dimensions are to be used. Contractors must check all dimensions on site. This drawing is protected by copyright.

ALL DIMENSIONS ARE SHOWN IN IMPERIAL.

CONSULTANT:
WSP

PROJECT:
252 SOUTH STREET
NEW YORK, NY

DRAWING TITLE:
27TH FLOOR (MECHANICAL) FRAMING PLAN - PART 2

SEAL & SIGNATURE:
STATE OF NEW YORK · AHMAD RAHIMIAN · No. 065557 · LICENSED PROFESSIONAL ENGINEER

DATE:	09/24/14
PROJECT No:	1302510
DRAWN: CAD	REV:
CHK: CL	
SCALE:	
DWG No:	S-272.02
DOB PAGE No:	of

DOB EMPLOYEE STAMP:
Tina Mathew, RA
APPROVED
Under Directive 2 of 1975
AMENDED APPLICATION
Date: 10/23/2017
NYC Development Hub

DOB B-SCAN:

30" x 42" Arch E1 - SHEET SIZE

FILE NAME:
PLOT DATE:

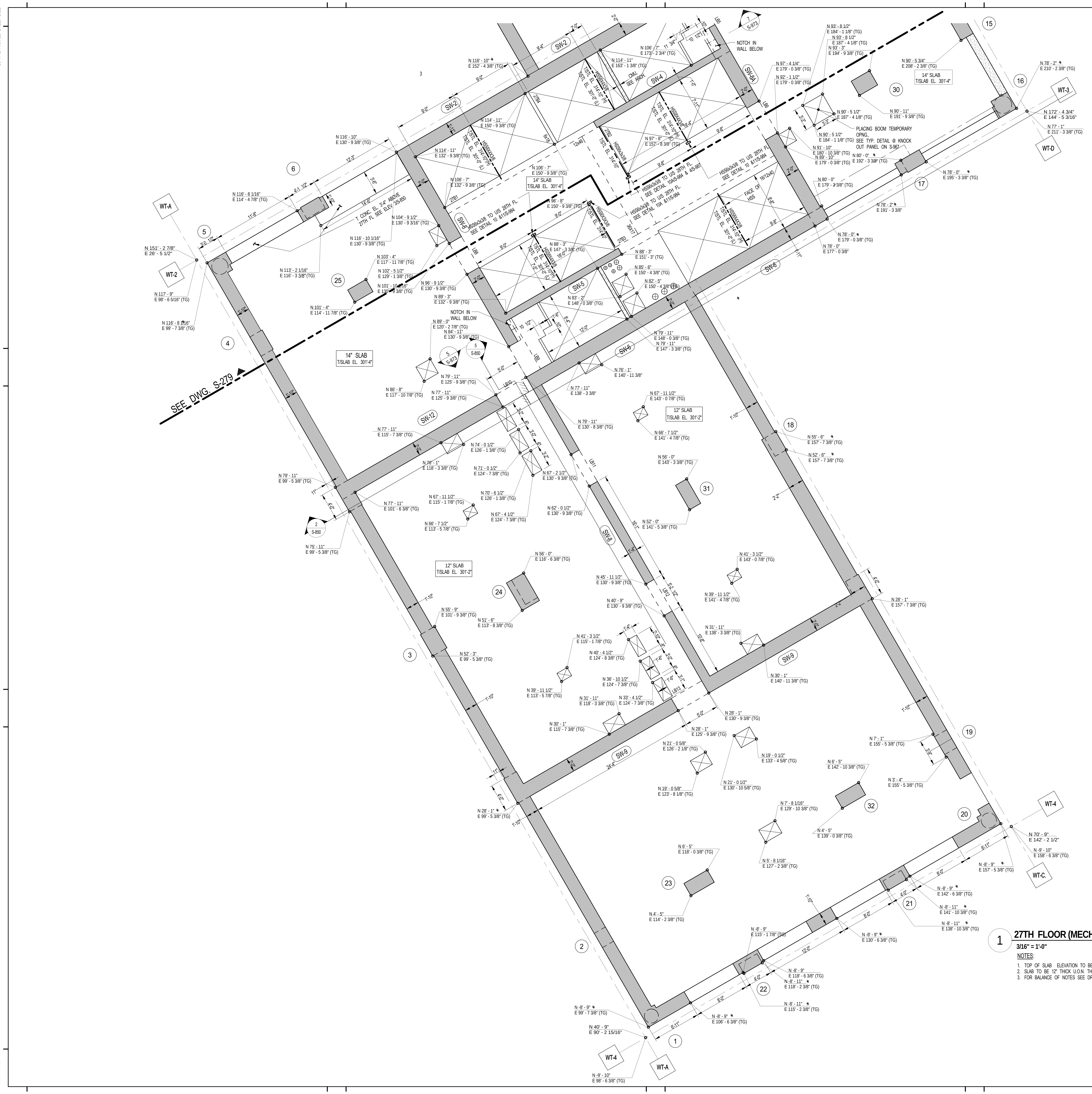

1 27TH FLOOR (MECHANICAL)GENERAL ARRANGEMENT - PLAN PART 1

3/16" = 1'-0"

NOTES:

1. TOP OF SLAB ELEVATION TO BE 301'-2" U.O.N. ON PLAN
2. SLAB TO BE 12" THICK U.O.N. THUS ...... ON PLAN.
3. FOR BALANCE OF NOTES SEE DRAWING S-010.

KEY PLAN:

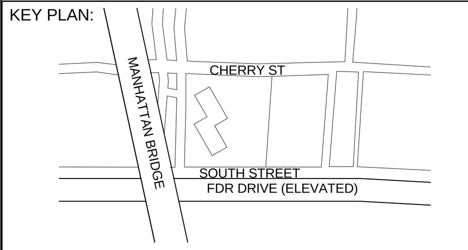

PROJECT NORTH

TRUE NORTH

DEVELOPER:
EXTELL DEVELOPMENT COMPANY
805 Third Ave, 7th Floor
New York, NY 10022
TEL: 212-712-6000 FAX: 212-712-6100

ARCHITECT OF RECORD:
AAI ARCHITECTS, P.C.
14 Wall Street, 2nd Floor
New York, NY 10005
TEL: 212-964-4040 FAX: 212-964-4090

INTERIOR DESIGNER:
MEYER DAVIS
180 Varick St, suite 404
New York, NY 10014
TEL: 212-627-5574

LANDSCAPE DESIGNER:
WEST 8 URBAN DESIGN & LANDSCAPE ARCHITECTURE P.C.
333 Hudson Street, Suite 905
New York, NY 10013
TEL: 212-285-0088 FAX: 212-285-0228

STRUCTURAL ENGINEERS:
WSP
228 East 45th Street
New York, NY 10017
TEL: 212-687-9888 FAX: 646-487-5501

MEP ENGINEERS:
ICOR ASSOCIATES, LLC
485 C Route 1 South, Suite 200
Iseline, NJ 08830
TEL: 908-272-3300 FAX: 908-272-4440

GEOTECHNICAL ENGINEERS:
LANGAN ENGINEERING & ENVIRONMENTAL SERVICES
21 Penn Plaza - 360 West 31st Street, 8th Floor
New York, NY 10001
TEL: 212.479.5400 FAX: 212.479.5444

No.	DESCRIPTION:	DATE:
	ISSUE FOR CONSTRUCTION	03-18-16
1	ASI #67	06-17-16
2	ASI #71	07-29-16
3	ASI #73	08-19-16
4	ASI #76	10-28-16
	ISSUED FOR FILING	05-22-17

Discrepancies must be reported immediately to the Architect before proceeding. Only figured dimensions are to be used. Contractors must check all dimensions on site. This drawing is protected by copyright.

ALL DIMENSIONS ARE SHOWN IN IMPERIAL.

CONSULTANT: WSP

PROJECT:
252 SOUTH STREET
NEW YORK, NY

DRAWING TITLE:
27TH FLOOR (MECHANICAL) GENERAL ARRANGEMENT - PLAN PART 1

SEAL & SIGNATURE: STATE OF NEW YORK · AHMAD RAHIMIAN · No. 065537 · LICENSED PROFESSIONAL ENGINEER

DATE:	08/07/15
PROJECT No:	1302510
DRAWN:	CAD
CHK:	CL
SCALE:	As indicated
REV:	
DWG No:	S-278.00
DOB PAGE No:	of

DOB EMPLOYEE STAMP:
Tina Mathew, RA
APPROVED
Under Directive 2 of 1975
AMENDED APPLICATION
Date: 10/23/2017
NYC Development Hub

DOB B-SCAN:

DEPT OF BLDGS121185539 Job Number
E303535056990 Scan Code
30" x 42" Arch E1 SHEET SIZE

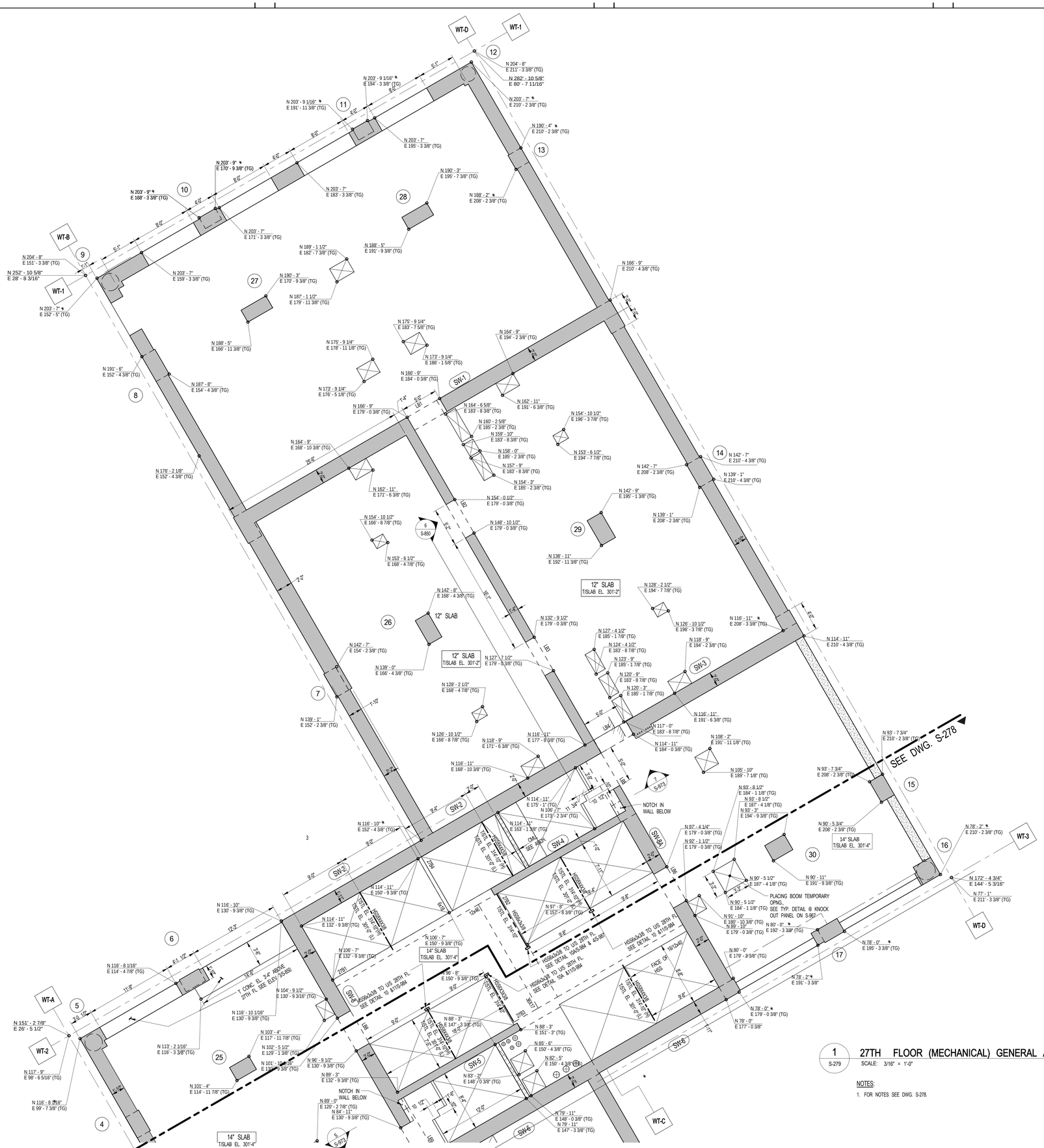

1 S-279 27TH FLOOR (MECHANICAL) GENERAL ARRANGEMENT - PLAN PART 2
SCALE: 3/16" = 1'-0"

NOTES:
1. FOR NOTES SEE DWG. S-278.

KEY PLAN:
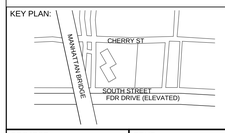

PROJECT NORTH
TRUE NORTH

DEVELOPER:
EXTELL DEVELOPMENT COMPANY
805 Third Ave, 7th Floor
New York, NY 10022
TEL: 212-712-6000 FAX: 212-712-6100

ARCHITECT OF RECORD:
AAI ARCHITECTS, P.C.
14 Wall Street, 2nd Floor
New York, NY 10005
TEL: 212-964-4040 FAX: 212-964-4090

INTERIOR DESIGNER:
MEYER DAVIS
180 Varick St, suite 404
New York, NY 10014
TEL: 212-627-5574

LANDSCAPE DESIGNER:
WEST 8 URBAN DESIGN & LANDSCAPE ARCHITECTURE P.C.
333 Hudson Street, Suite 905
New York, NY 10013
TEL: 212-285-0088 FAX: 212-285-0228

STRUCTURAL ENGINEERS:
WSP
228 East 45th Street
New York, NY 10017
TEL: 212-687-9888 FAX: 646-487-5501

MEP ENGINEERS:
ICOR ASSOCIATES, LLC
485 C Route 1 South, Suite 200
Iseline, NJ 08830
TEL: 908-272-3300 FAX: 908-272-4440

GEOTECHNICAL ENGINEERS:
LANGAN ENGINEERING & ENVIRONMENTAL SERVICES
21 Penn Plaza - 360 West 31st Street, 8th Floor
New York, NY 10001
TEL: 212.479.5400 FAX: 212.479.5444

No.	DESCRIPTION:	DATE:
	ISSUE FOR CONSTRUCTION	03-18-16
1	ASI #67	06-17-16
2	ASI #71	07-29-16
3	ASI #73	08-19-16
4	ASI #76	10-28-16
	ISSUED FOR FILING	05-22-17

Discrepancies must be reported immediately to the Architect before proceeding. Only figured dimensions are to be used. Contractors must check all dimensions on site. This drawing is protected by copyright.

ALL DIMENSIONS ARE SHOWN IN IMPERIAL.

CONSULTANT:
WSP

PROJECT:
252 SOUTH STREET
NEW YORK, NY

DRAWING TITLE:
27TH FLOOR (MECHANICAL) GENERAL ARRANGEMENT - PLAN PART 2

SEAL & SIGNATURE:
STATE OF NEW YORK · AHMAD RAHIMIAN · 087557 · LICENSED PROFESSIONAL ENGINEER

DATE: 08/07/15
PROJECT No: 1302510
DRAWN: CAD REV:
CHK: CL
SCALE: As indicated
DWG No: **S-279.00**
DOB PAGE No: of

DOB EMPLOYEE STAMP:
Tina Mathew, RA
APPROVED
Under Directive 2 of 1975
AMENDED APPLICATION
Date: 10/23/2017
NYC Development Hub

DOB B-SCAN:

FILE NAME:
PLOT DATE:

DEPT OF BLDGS 121185528 Job Number
ES630121930 Scan Code

1 S-280 28TH FLOOR OVERALL FRAMING PLAN
SCALE: 3/32" = 1'-0"

NOTES:

1. TOP OF SLAB ELEVATION TO BE +318'-4" U.O.N. ON PLAN
2. SLAB TO BE 12" THICK U.O.N. THUS ON PLAN.
3. TOP & BOTTOM REINFORCEMENT TO BE #5@12 CONT. E.W. FOR 12" SLAB U.O.N. ON PLAN. FOR ADDITIONAL REIFORCEMENT SEE PLAN
4. FOR BALANCE OF NOTES SEE DRAWING S-010.
5. FOR STR. INTEGRITY REINF. ADD'L INFORMATION SEE S-965.

28TH FLOOR BEAM SCHEDULE

BEAM MARK	SIZE WIDTH	SIZE DEPTH	REINFORCEMENT BOTTOM CONTINUOUS	REINFORCEMENT TOP CONTINUOUS	REINFORCEMENT TOP ADD'L BARS AT SUPPORT	STIRRUPS TYPE	STIRRUPS SIZE	STIRRUPS SPACING	REMARKS
28B1	12	50	3-#10	3-#6		1	#4	@12	#4@10 HORIZ E.F.
28B2	36	14	7-#9	7-#7		2	#4	@5	
28B3	16 /12	50	3-#10	3-#6		1	#4	@12	1-#10B & 1-#6T ADD'L IN 16" WIDE BEAM, #4@10 H.E.F.
28B4	6	50	1-#8	1-#8		1A	#4	@8	#6@8 H.E.F.

TYPE 1 TYPE 1A TYPE 2
STIRRUP TYPES

KEY PLAN:

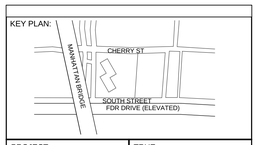

PROJECT NORTH
TRUE NORTH

DEVELOPER:
EXTELL DEVELOPMENT COMPANY
805 Third Ave, 7th Floor
New York, NY 10022
TEL: 212-712-6000 FAX: 212-712-6100

ARCHITECT OF RECORD:
AAI ARCHITECTS, P.C.
14 Wall Street, 2nd Floor
New York, NY 10005
TEL: 212-964-4040 FAX: 212-964-4090

INTERIOR DESIGNER:
MEYER DAVIS
180 Varick St, suite 404
New York, NY 10014
TEL: 212-627-5574

LANDSCAPE DESIGNER:
WEST 8 URBAN DESIGN & LANDSCAPE ARCHITECTURE P.C.
333 Hudson Street, Suite 905
New York, NY 10013
TEL: 212-285-0088 FAX: 212-285-0228

STRUCTURAL ENGINEERS:
WSP
228 East 45th Street
New York, NY 10017
TEL: 212-687-9888 FAX: 646-487-5501

MEP ENGINEERS:
ICOR ASSOCIATES, LLC
485 C Route 1 South, Suite 200
Iseline, NJ 08830
TEL: 908-272-3300 FAX: 908-272-4440

GEOTECHNICAL ENGINEERS:
LANGAN ENGINEERING & ENVIRONMENTAL SERVICES
21 Penn Plaza - 360 West 31st Street, 8th Floor
New York, NY 10001
TEL: 212.479.5400 FAX: 212.479.5444

No.	DESCRIPTION:	DATE:
	50% SD	02-28-14
	100%SD	04-25-14
	50% DD	08-01-14
	DESIGN DEVELOPMENT	10-07-14
	CONCRETE BID PACKAGE	03-06-15
	50% CONSTRUCTION DOCUMENTS	04-08-15
	ISSUED FOR FILING	07-28-15
	80% CONSTRUCTION DOCUMENTS	08-14-15
	ASI #13	08-26-15
1	ASI #75	10-10-16
2	ASI #76	10-28-16
3	ISSUED FOR FILING	05-22-17

Discrepancies must be reported immediately to the Architect before proceeding. Only figured dimensions are to be used. Contractors must check all dimensions on site. This drawing is protected by copyright.

ALL DIMENSIONS ARE SHOWN IN IMPERIAL.

CONSULTANT:
WSP

PROJECT:
252 SOUTH STREET
NEW YORK, NY

DRAWING TITLE:
28TH FLOOR OVERALL FRAMING PLAN

SEAL & SIGNATURE:
STATE OF NEW YORK
AHMAD RAHMIAN
No. 065537
LICENSED PROFESSIONAL ENGINEER

DATE:	02/28/14
PROJECT No:	1302510
DRAWN: CAD	REV:
CHK: CL	
SCALE:	
DWG No:	S-280.02
DOB PAGE No:	of

DOB EMPLOYEE STAMP:
Tina Mathew, RA
APPROVED
Under Directive 2 of 1975
AMENDED APPLICATION
Date: 10/23/2017
NYC Development Hub

DOB B-SCAN:

30" x 42" Arch E1 - SHEET SIZE
FILE NAME:
PLOT DATE:

DEPT OF BLDGS121185539 Job Number
E-338251151744 Scan Code

30" x 42" Arch E1 - SHEET SIZE

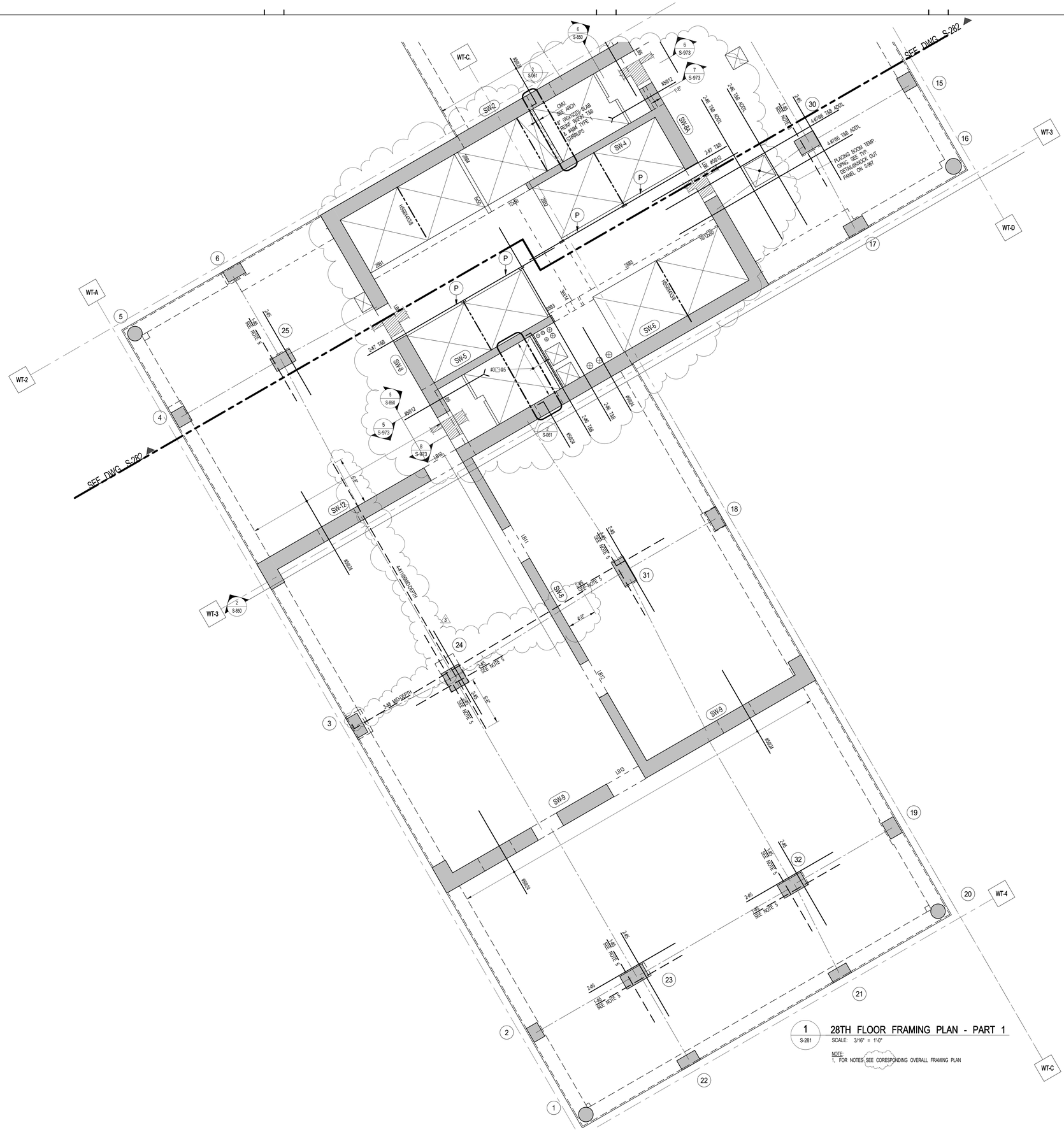

1 S-281 **28TH FLOOR FRAMING PLAN - PART 1**

SCALE: 3/16" = 1'-0"

NOTE:
1. FOR NOTES, SEE CORESPONDING OVERALL FRAMING PLAN

KEY PLAN:

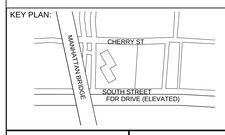

PROJECT NORTH

TRUE NORTH

DEVELOPER:
EXTELL DEVELOPMENT COMPANY
805 Third Ave, 7th Floor
New York, NY 10022
TEL: 212-712-6000 FAX: 212-712-6100

ARCHITECT OF RECORD:
AAI ARCHITECTS, P.C.
14 Wall Street, 2nd Floor
New York, NY 10005
TEL: 212-964-4040 FAX: 212-964-4090

INTERIOR DESIGNER:
MEYER DAVIS
180 Varick St, suite 404
New York, NY 10014
TEL: 212-627-5574

LANDSCAPE DESIGNER:
WEST 8 URBAN DESIGN & LANDSCAPE ARCHITECTURE P.C.
333 Hudson Street, Suite 905
New York, NY 10013
TEL: 212-285-0088 FAX: 212-285-0228

STRUCTURAL ENGINEERS:
WSP
228 East 45th Street
New York, NY 10017
TEL: 212-687-9888 FAX: 646-487-5501

MEP ENGINEERS:
ICOR ASSOCIATES, LLC
485 C Route 1 South, Suite 200
Iseline, NJ 08830
TEL: 908-272-3300 FAX: 908-272-4440

GEOTECHNICAL ENGINEERS:
LANGAN ENGINEERING & ENVIRONMENTAL SERVICES
21 Penn Plaza - 360 West 31st Street, 8th Floor
New York, NY 10001
TEL: 212.479.5400 FAX: 212.479.5444

No.	DESCRIPTION:	DATE:
	50% DD	08-01-14
	DESIGN DEVELOPMENT	10-07-14
	CONCRETE BID PACKAGE	03-06-15
	50% CONSTRUCTION DOCUMENTS	04-08-15
	ISSUED FOR FILING	07-28-15
	80% CONSTRUCTION DOCUMENTS	08-14-15
	ISSUE FOR CONSTRUCTION	03-18-16
1	ASI #75	10-10-16
2	ASI #76	10-28-16
3	ISSUED FOR FILING	05-22-17

Discrepancies must be reported immediately to the Architect before proceeding. Only figured dimensions are to be used. Contractors must check all dimensions on site. This drawing is protected by copyright.

ALL DIMENSIONS ARE SHOWN IN IMPERIAL.

CONSULTANT:
WSP

PROJECT:
252 SOUTH STREET
NEW YORK, NY

DRAWING TITLE:
28TH FRAMING PLAN - PART 1

SEAL & SIGNATURE:
STATE OF NEW YORK · ANMAD RAHMAN · No. 085657 · LICENSED PROFESSIONAL ENGINEER

DATE:	08/01/14
PROJECT No:	1302510
DRAWN: CAD	REV:
CHK: CL	
SCALE:	
DWG No:	**S-281.02**
DOB PAGE No:	of

DOB EMPLOYEE STAMP:
Tina Mathew, RA
APPROVED
Under Directive 2 of 1975
AMENDED APPLICATION
Date: 10/23/2017
NYC Development Hub

DOB B-SCAN:

FILE NAME:
PLOT DATE:

DEPT OF BLDGS121185539 Job Number
E:S214F250991 Scan Code
30" x 42" Arch E1 - SHEET SIZE

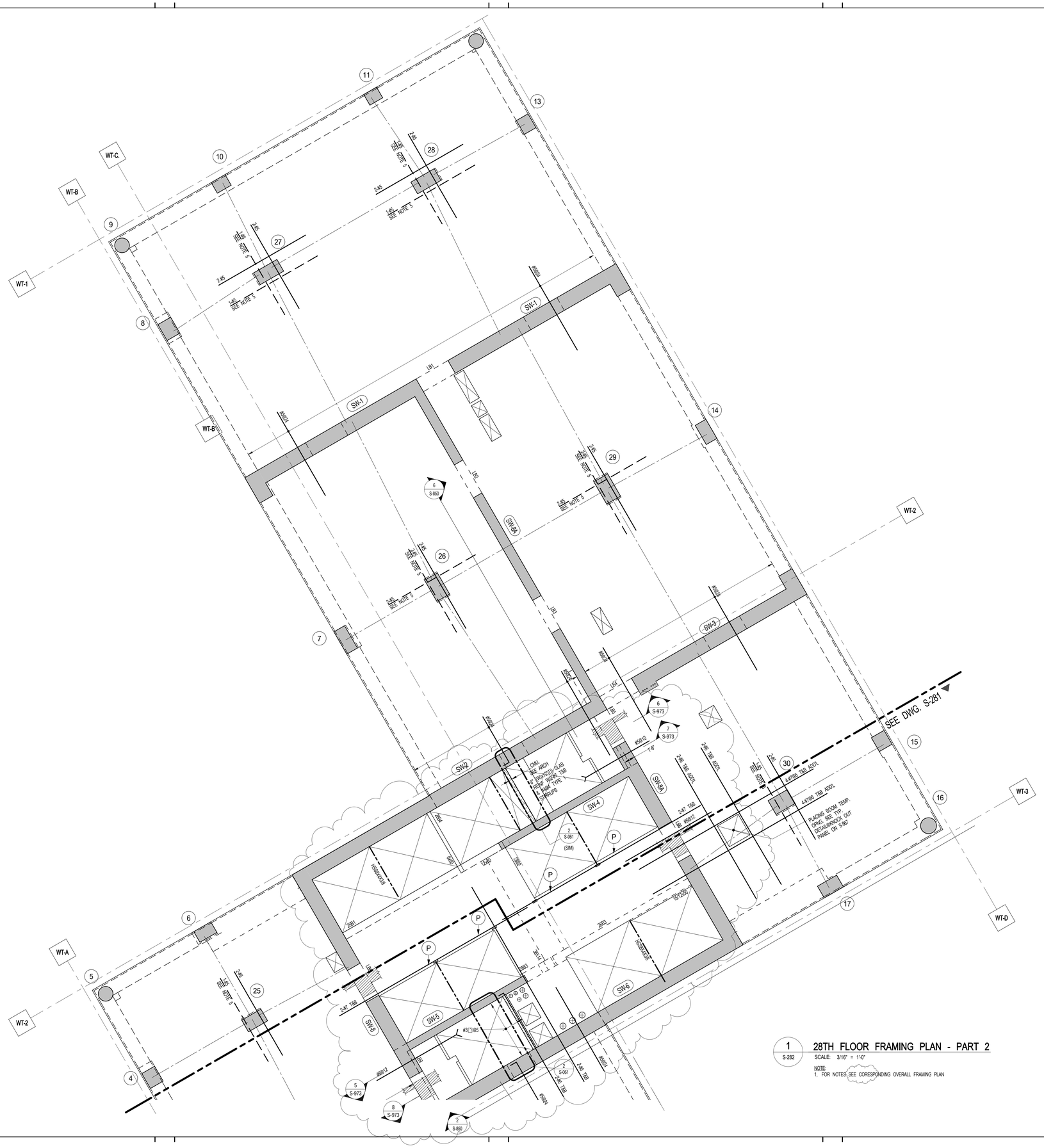

1 S-282 **28TH FLOOR FRAMING PLAN - PART 2**

SCALE: 3/16" = 1'-0"

NOTE:
1. FOR NOTES, SEE CORESPONDING OVERALL FRAMING PLAN

KEY PLAN:

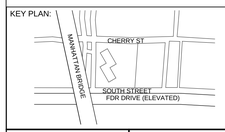

PROJECT NORTH

TRUE NORTH

DEVELOPER:
EXTELL DEVELOPMENT COMPANY
805 Third Ave, 7th Floor
New York, NY 10022
TEL: 212-712-6000 FAX: 212-712-6100

ARCHITECT OF RECORD:
AAI ARCHITECTS, P.C.
14 Wall Street, 2nd Floor
New York, NY 10005
TEL: 212-964-4040 FAX: 212-964-4090

INTERIOR DESIGNER:
MEYER DAVIS
180 Varick St, suite 404
New York, NY 10014
TEL: 212-627-5574

LANDSCAPE DESIGNER:
WEST 8 URBAN DESIGN & LANDSCAPE ARCHITECTURE P.C.
333 Hudson Street, Suite 905
New York, NY 10013
TEL: 212-285-0088 FAX: 212-285-0228

STRUCTURAL ENGINEERS:
WSP
228 East 45th Street
New York, NY 10017
TEL: 212-687-9888 FAX: 646-487-5501

MEP ENGINEERS:
ICOR ASSOCIATES, LLC
485 C Route 1 South, Suite 200
Iseline, NJ 08830
TEL: 908-272-3300 FAX: 908-272-4440

GEOTECHNICAL ENGINEERS:
LANGAN ENGINEERING & ENVIRONMENTAL SERVICES
21 Penn Plaza - 360 West 31st Street, 8th Floor
New York, NY 10001
TEL: 212.479.5400 FAX: 212.479.5444

No.	DESCRIPTION:	DATE:
	50% DD	08-01-14
	DESIGN DEVELOPMENT	10-07-14
	CONCRETE BID PACKAGE	03-06-15
	50% CONSTRUCTION DOCUMENTS	04-08-15
	ISSUED FOR FILING	07-28-15
	80% CONSTRUCTION DOCUMENTS	08-14-15
	ISSUE FOR CONSTRUCTION	03-18-16
1	ASI #75	10-10-16
2	ASI #76	10-28-16
	ISSUED FOR FILING	05-22-17

Discrepancies must be reported immediately to the Architect before proceeding. Only figured dimensions are to be used. Contractors must check all dimensions on site. This drawing is protected by copyright.

ALL DIMENSIONS ARE SHOWN IN IMPERIAL.

CONSULTANT:
WSP

PROJECT:
252 SOUTH STREET
NEW YORK, NY

DRAWING TITLE:
28TH FRAMING PLAN - PART 2

SEAL & SIGNATURE:
STATE OF NEW YORK · AHMAD RAMADAN · No. 085027 · LICENSED PROFESSIONAL ENGINEER

DATE:	08/01/14
PROJECT No:	1302510
DRAWN: CAD	REV:
CHK: CL	
SCALE:	
DWG No:	**S-282.02**
DOB PAGE No:	of

DOB EMPLOYEE STAMP:
Tina Mathew, RA
APPROVED
Under Directive 2 of 1975
AMENDED APPLICATION
Date: 10/23/2017
NYC Development Hub

DOB B-SCAN:

FILE NAME:
PLOT DATE:

1
S-288

28TH FLOOR GENERAL ARRANGEMENT PLAN - PART 1

SCALE: 3/16" = 1'-0"

NOTES:

1. TOP OF SLAB ELEVATION TO BE + 318'-4" U.O.N. ON PLAN
2. SLAB TO BE 12" THICK U.O.N. THUS ...... ON PLAN.
3. FOR BALANCE OF NOTES SEE DRAWING S-010.

KEY PLAN:

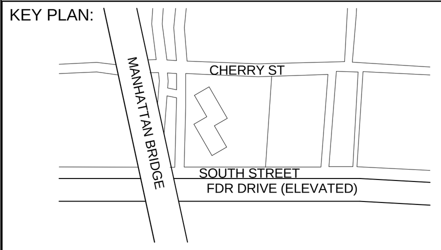

PROJECT NORTH | TRUE NORTH

DEVELOPER:
EXTELL DEVELOPMENT COMPANY
805 Third Ave, 7th Floor
New York, NY 10022
TEL: 212-712-6000 FAX: 212-712-6100

ARCHITECT OF RECORD:
AAI ARCHITECTS, P.C.
14 Wall Street, 20th Floor
New York, NY 10005
TEL: 212-964-4040 FAX: 212-964-4090

INTERIOR DESIGNER:
MEYER DAVIS
180 Varick St, suite 404
New York, NY 10014
TEL: 212-627-5574

LANDSCAPE DESIGNER:
WEST 8 URBAN DESIGN & LANDSCAPE ARCHITECTURE P.C.
333 Hudson Street, Suite 905
New York, NY 10013
TEL: 212-285-0088 FAX: 212-285-0228

STRUCTURAL ENGINEERS:
WSP
228 East 45th Street
New York, NY 10017
TEL: 212-687-9888 FAX: 646-487-5501

MEP ENGINEERS:
ICOR ASSOCIATES, LLC
485 C Route 1 South, Suite 200
Iseline, NJ 08830
TEL: 908-272-3300 FAX: 908-272-4440

GEOTECHNICAL ENGINEERS:
LANGAN ENGINEERING & ENVIRONMENTAL SERVICES
21 Penn Plaza - 360 West 31st Street, 8th Floor
New York, NY 10001
TEL: 212.479.5400 FAX: 212.479.5444

No.	DESCRIPTION:	DATE:
	ISSUE FOR CONSTRUCTION	03-18-16
1	ASI #67	06-17-16
2	ASI #75	10-10-16
3	ASI #76	10-28-16
4	ASI #80	12-09-16
	ISSUED FOR FILING	05-22-17

Discrepancies must be reported immediately to the Architect before proceeding. Only figured dimensions are to be used. Contractors must check all dimensions on site. This drawing is protected by copyright.

ALL DIMENSIONS ARE SHOWN IN IMPERIAL.

CONSULTANT: WSP

PROJECT:
252 SOUTH STREET
NEW YORK, NY

DRAWING TITLE:
28TH FLOOR GENERAL ARRANGEMENT PLAN - PART 1

SEAL & SIGNATURE: STATE OF NEW YORK — AHMAD RAHIMIAN — LICENSED PROFESSIONAL ENGINEER — No. 065537

DATE:	08/07/15
PROJECT No:	1302510
DRAWN:	CAD
CHK:	CL
SCALE:	As indicated
REV:	
DWG No:	S-288.00
DOB PAGE No:	of

DOB EMPLOYEE STAMP:
Tina Mathew, RA
APPROVED
Under Directive 2 of 1975
AMENDED APPLICATION
Date: 10/23/2017
NYC Development Hub

DOB B-SCAN:

DEPT OF BLDGS121185528 Job Number
E305512144G9 Scan Code

30" x 42" Arch E1 SHEET SIZE

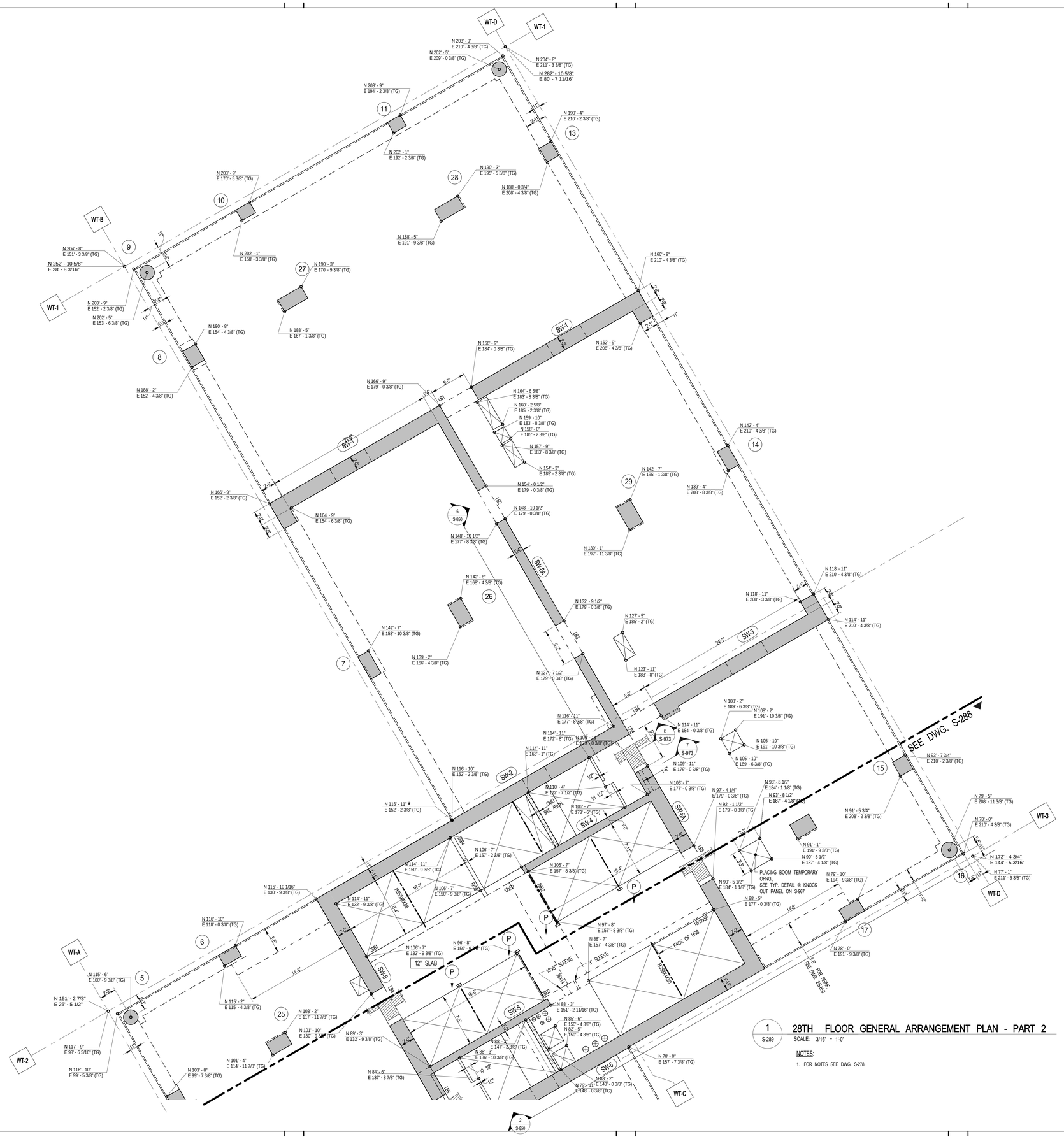

FILE NAME:
PLOT DATE:

KEY PLAN:

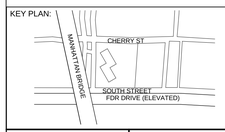

PROJECT NORTH

TRUE NORTH

DEVELOPER:
EXTELL DEVELOPMENT COMPANY
805 Third Ave, 7th Floor
New York, NY 10022
TEL: 212-712-6000 FAX: 212-712-6100

ARCHITECT OF RECORD:
AAI ARCHITECTS, P.C.
14 Wall Street, 2nd Floor
New York, NY 10005
TEL: 212-964-4040 FAX: 212-964-4090

INTERIOR DESIGNER:
MEYER DAVIS
180 Varick St, suite 404
New York, NY 10014
TEL: 212-627-5574

LANDSCAPE DESIGNER:
WEST 8 URBAN DESIGN & LANDSCAPE ARCHITECTURE P.C.
333 Hudson Street, Suite 905
New York, NY 10013
TEL: 212-285-0088 FAX: 212-285-0228

STRUCTURAL ENGINEERS:
WSP
228 East 45th Street
New York, NY 10017
TEL: 212-687-9888 FAX: 646-487-5501

MEP ENGINEERS:
ICOR ASSOCIATES, LLC
485 C Route 1 South, Suite 200
Iselin, NJ 08830
TEL: 908-272-3300 FAX: 908-272-4440

GEOTECHNICAL ENGINEERS:
LANGAN ENGINEERING & ENVIRONMENTAL SERVICES
21 Penn Plaza - 360 West 31st Street, 8th Floor
New York, NY 10001
TEL: 212.479.5400 FAX: 212.479.5444

No.	DESCRIPTION:	DATE:
	ISSUE FOR CONSTRUCTION	03-18-16
1	ASI #67	06-17-16
2	ASI #75	10-10-16
3	ASI #76	10-28-16
4	ASI #80	12-09-16
	ISSUED FOR FILING	05-22-17

Discrepancies must be reported immediately to the Architect before proceeding. Only figured dimensions are to be used. Contractors must check all dimensions on site. This drawing is protected by copyright.

ALL DIMENSIONS ARE SHOWN IN IMPERIAL.

CONSULTANT:
WSP

PROJECT:
252 SOUTH STREET
NEW YORK, NY

DRAWING TITLE:
28TH FLOOR GENERAL ARRANGEMENT PLAN - PART 2

SEAL & SIGNATURE:

DATE:	08/07/15
PROJECT No:	1302510
DRAWN: CAD	REV:
CHK: CL	
SCALE: As indicated	
DWG No:	S-289.00
DOB PAGE No:	of

DOB EMPLOYEE STAMP:

Tina Mathew, RA
Building Design
APPROVED
Under Directive 2 of 1975
AMENDED APPLICATION
Date: 10/23/2017
NYC Development Hub

DOB B-SCAN:

DEPT OF BLDGS 121185528 Job Number
ES162148641 Scan Code

1 S-290 29TH-48TH TYPICAL FLOOR FRAMING PLAN
SCALE: 3/32" = 1'-0"

NOTES:

1. TOP OF SLAB ELEVATION TO BE: U.O.N. ON PLAN

29TH FLOOR	328'-4"	
30TH FLOOR	338'-4"	
31ST FLOOR	348'-4"	
32ND FLOOR	358'-4"	
33RD FLOOR	368'-4"	
34TH FLOOR	378'-4"	
35TH FLOOR	389'-5"	
36TH FLOOR	399'-5"	
37TH FLOOR	409'-5"	
38TH FLOOR	419'-5"	
39TH FLOOR	429'-5"	
40TH FLOOR	439'-5"	
41ST FLOOR	449'-5"	
42ND FLOOR	459'-5"	
43RD FLOOR	469'-5"	
44TH FLOOR	480'-6"	
45TH FLOOR	490'-6"	
46TH FLOOR	500'-6"	
47TH FLOOR	510'-6"	
48TH FLOOR	520'-6"	

2. SLAB TO BE 9" THICK U.O.N. THUS ▭ ON PLAN.
3. BOTTOM REINFORCEMENT TO BE: #4@12 FOR 9" SLAB
#4@10 FOR 10" SLAB
4. FOR BALANCE OF NOTES SEE DRAWING S-010.
5. FOR STR. INTEGRITY REINF. ADDL INFORMATION SEE S-965.

KEY PLAN:

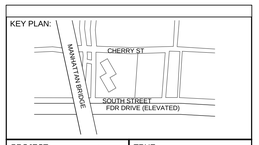

PROJECT NORTH

TRUE NORTH

DEVELOPER:
EXTELL DEVELOPMENT COMPANY
805 Third Ave, 7th Floor
New York, NY 10022
TEL: 212-712-6000 FAX: 212-712-6100

ARCHITECT OF RECORD:
AAI ARCHITECTS, P.C.
14 Wall Street, 2nd Floor
New York, NY 10005
TEL: 212-964-4040 FAX: 212-964-4090

INTERIOR DESIGNER:
MEYER DAVIS
180 Varick St, suite 404
New York, NY 10014
TEL: 212-627-5574

LANDSCAPE DESIGNER:
WEST 8 URBAN DESIGN & LANDSCAPE ARCHITECTURE P.C.
333 Hudson Street, Suite 905
New York, NY 10013
TEL: 212-285-0088 FAX: 212-285-0228

STRUCTURAL ENGINEERS:
WSP
228 East 45th Street
New York, NY 10017
TEL: 212-687-9888 FAX: 646-487-5501

MEP ENGINEERS:
ICOR ASSOCIATES, LLC
485 C Route 1 South, Suite 200
Iseline, NJ 08830
TEL: 908-272-3300 FAX: 908-272-4440

GEOTECHNICAL ENGINEERS:
LANGAN ENGINEERING & ENVIRONMENTAL SERVICES
21 Penn Plaza - 360 West 31st Street, 8th Floor
New York, NY 10001
TEL: 212.479.5400 FAX: 212.479.5444

No.	DESCRIPTION:	DATE:
	CONCRETE BID PACKAGE	03-06-15
	50% CONSTRUCTION DOCUMENTS	04-08-15
	ISSUED FOR FILING	07-28-15
	80% CONSTRUCTION DOCUMENTS	08-14-15
	ASI #13	08-26-15
1	ASI #82	01-16-17
	ISSUED FOR FILING	05-22-17

Discrepancies must be reported immediately to the Architect before proceeding. Only figured dimensions are to be used. Contractors must check all dimensions on site. This drawing is protected by copyright.

ALL DIMENSIONS ARE SHOWN IN IMPERIAL.

CONSULTANT:
WSP

PROJECT:
252 SOUTH STREET
NEW YORK, NY

DRAWING TITLE:
29TH-48TH FLOOR OVERALL FRAMING PLAN

SEAL & SIGNATURE:
STATE OF NEW YORK
AHMAD RAHIMIAN
No. 065557
LICENSED PROFESSIONAL ENGINEER

DATE:	03/03/15
PROJECT No:	1302510
DRAWN: CAD	REV:
CHK: CL	
SCALE: As indicated	
DWG No:	S-290.02
DOB PAGE No:	of

DOB EMPLOYEE STAMP:
Tina Mathew, RA
APPROVED
Under Directive 2 of 1975
AMENDED APPLICATION
Date: 10/23/2017
NYC Development Hub

DOB B-SCAN:

30" x 42" Arch E1 - SHEET SIZE

FILE NAME:
PLOT DATE:

121185528 Job Number ES353727735 Scan Code

1 S-291 29TH-48TH FLOOR FRAMING PLAN - PART 1

SCALE: 3/16" = 1'-0"

NOTE:

1. FOR NOTES SEE CORRESPONDING OVERALL FRAMING PLAN.

KEY PLAN:

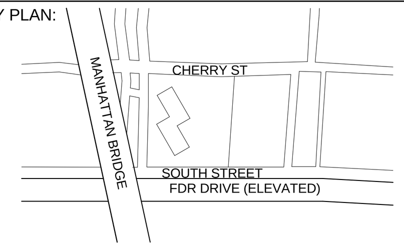

PROJECT NORTH

TRUE NORTH

DEVELOPER:
EXTELL DEVELOPMENT COMPANY
805 Third Ave, 7th Floor
New York, NY 10022
TEL: 212-712-6000 FAX: 212-712-6100

ARCHITECT OF RECORD:
AAI ARCHITECTS, P.C.
14 Wall Street, 2nd Floor
New York, NY 10005
TEL: 212-964-4040 FAX: 212-964-4090

INTERIOR DESIGNER:
MEYER DAVIS
180 Varick St, suite 404
New York, NY 10014
TEL: 212-627-5574

LANDSCAPE DESIGNER:
WEST 8 URBAN DESIGN & LANDSCAPE ARCHITECTURE P.C.
333 Hudson Street, Suite 905
New York, NY 10013
TEL: 212-285-0088 FAX: 212-285-0228

STRUCTURAL ENGINEERS:
WSP
228 East 45th Street
New York, NY 10017
TEL: 212-687-9888 FAX: 646-487-5501

MEP ENGINEERS:
ICOR ASSOCIATES, LLC
485 C Route 1 South, Suite 200
Iseline, NJ 08830
TEL: 908-272-3300 FAX: 908-272-4440

GEOTECHNICAL ENGINEERS:
LANGAN ENGINEERING & ENVIRONMENTAL SERVICES
21 Penn Plaza - 360 West 31st Street, 8th Floor
New York, NY 10001
TEL: 212.479.5400 FAX: 212.479.5444

No.	DESCRIPTION:	DATE:
	CONCRETE BID PACKAGE	03-06-15
	50% CONSTRUCTION DOCUMENTS	04-08-15
	ISSUED FOR FILING	07-28-15
	80% CONSTRUCTION DOCUMENTS	08-14-15
	ASI #13	08-26-15
	ISSUE FOR CONSTRUCTION	03-18-16
1	ASI #63	05-06-16
2	ASI #75	10-10-16
3	ASI #82	01-16-17
4	ISSUED FOR FILING	05-22-17

Discrepancies must be reported immediately to the Architect before proceeding. Only figured dimensions are to be used. Contractors must check all dimensions on site. This drawing is protected by copyright.

ALL DIMENSIONS ARE SHOWN IN IMPERIAL.

CONSULTANT: WSP

PROJECT:

252 SOUTH STREET
NEW YORK, NY

DRAWING TITLE:

29TH-48TH FRAMING PLAN - PART 1

SEAL & SIGNATURE: STATE OF NEW YORK · AHMAD RAHIMIAN · No. 065537 · LICENSED PROFESSIONAL ENGINEER

DATE:	03/03/15		
PROJECT No:	1302510		
DRAWN:	CAD	REV:	
CHK:	CL		
SCALE:	As indicated		
DWG No:	**S-291.02**		
DOB PAGE No:	of		

DOB EMPLOYEE STAMP:

Tina Mathew, RA
APPROVED
Under Directive 2 of 1975
AMENDED APPLICATION
Date: 10/23/2017
NYC Development Hub

DOB B-SCAN:

30" x 42" Arch E1 - SHEET SIZE

FILE NAME:
PLOT DATE:

DEPT OF BLDGS 121185528 Job Number
ES323151147 Scan Code

1 S-292 29TH-48TH FLOOR FRAMING PLAN - PART 2

SCALE: 3/16" = 1'-0"

NOTE:

1. FOR NOTES SEE CORRESPONDING OVERALL FRAMING PLAN.

KEY PLAN:

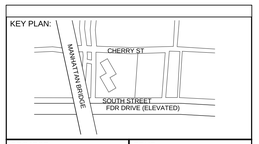

PROJECT NORTH

TRUE NORTH

DEVELOPER:
EXTELL DEVELOPMENT COMPANY
805 Third Ave, 7th Floor
New York, NY 10022
TEL: 212-712-6000 FAX: 212-712-6100

ARCHITECT OF RECORD:
AAI ARCHITECTS, P.C.
14 Wall Street, 2nd Floor
New York, NY 10005
TEL: 212-964-4040 FAX: 212-964-4090

INTERIOR DESIGNER:
MEYER DAVIS
180 Varick St, suite 404
New York, NY 10014
TEL: 212-627-5574

LANDSCAPE DESIGNER:
WEST 8 URBAN DESIGN & LANDSCAPE ARCHITECTURE P.C.
333 Hudson Street, Suite 905
New York, NY 10013
TEL: 212-285-0088 FAX: 212-285-0228

STRUCTURAL ENGINEERS:
WSP
228 East 45th Street
New York, NY 10017
TEL: 212-687-9888 FAX: 646-487-5501

MEP ENGINEERS:
ICOR ASSOCIATES, LLC
485 C Route 1 South, Suite 200
Iseline, NJ 08830
TEL: 908-272-3300 FAX: 908-272-4440

GEOTECHNICAL ENGINEERS:
LANGAN ENGINEERING & ENVIRONMENTAL SERVICES
21 Penn Plaza - 360 West 31st Street, 8th Floor
New York, NY 10001
TEL: 212.479.5400 FAX: 212.479.5444

No.	DESCRIPTION:	DATE:
	CONCRETE BID PACKAGE	03-06-15
	50% CONSTRUCTION DOCUMENTS	04-08-15
	ISSUED FOR FILING	07-28-15
	80% CONSTRUCTION DOCUMENTS	08-14-15
	ASI #13	08-26-15
	ISSUE FOR CONSTRUCTION	03-18-16
1	ASI #63	05-06-16
2	ASI #75	10-10-16
3	ASI #82	01-16-17
4	ISSUED FOR FILING	05-22-17

Discrepancies must be reported immediately to the Architect before proceeding. Only figured dimensions are to be used. Contractors must check all dimensions on site. This drawing is protected by copyright.

ALL DIMENSIONS ARE SHOWN IN IMPERIAL.

CONSULTANT:
WSP

PROJECT:
252 SOUTH STREET
NEW YORK, NY

DRAWING TITLE:
29TH-48TH FRAMING PLAN - PART 2

SEAL & SIGNATURE:

STATE OF NEW YORK
AHMAD RAHMIAN
No. 065537
LICENSED PROFESSIONAL ENGINEER

DATE:	03/03/15
PROJECT No:	1302510
DRAWN: CAD	REV:
CHK: CL	
SCALE: As indicated	
DWG No:	S-292.02
DOB PAGE No:	of

DOB EMPLOYEE STAMP:

Tina Mathew, RA
APPROVED
Under Directive 2 of 1975
AMENDED APPLICATION
Date: 10/23/2017
NYC Development Hub

DOB B-SCAN:

30" x 42" Arch E1 - SHEET SIZE

FILE NAME:
PLOT DATE:

30" x 42" Arch E1 - SHEET SIZE

DEPT OF BLDGS121105028 Job Number

E307.100.571 Scan Code

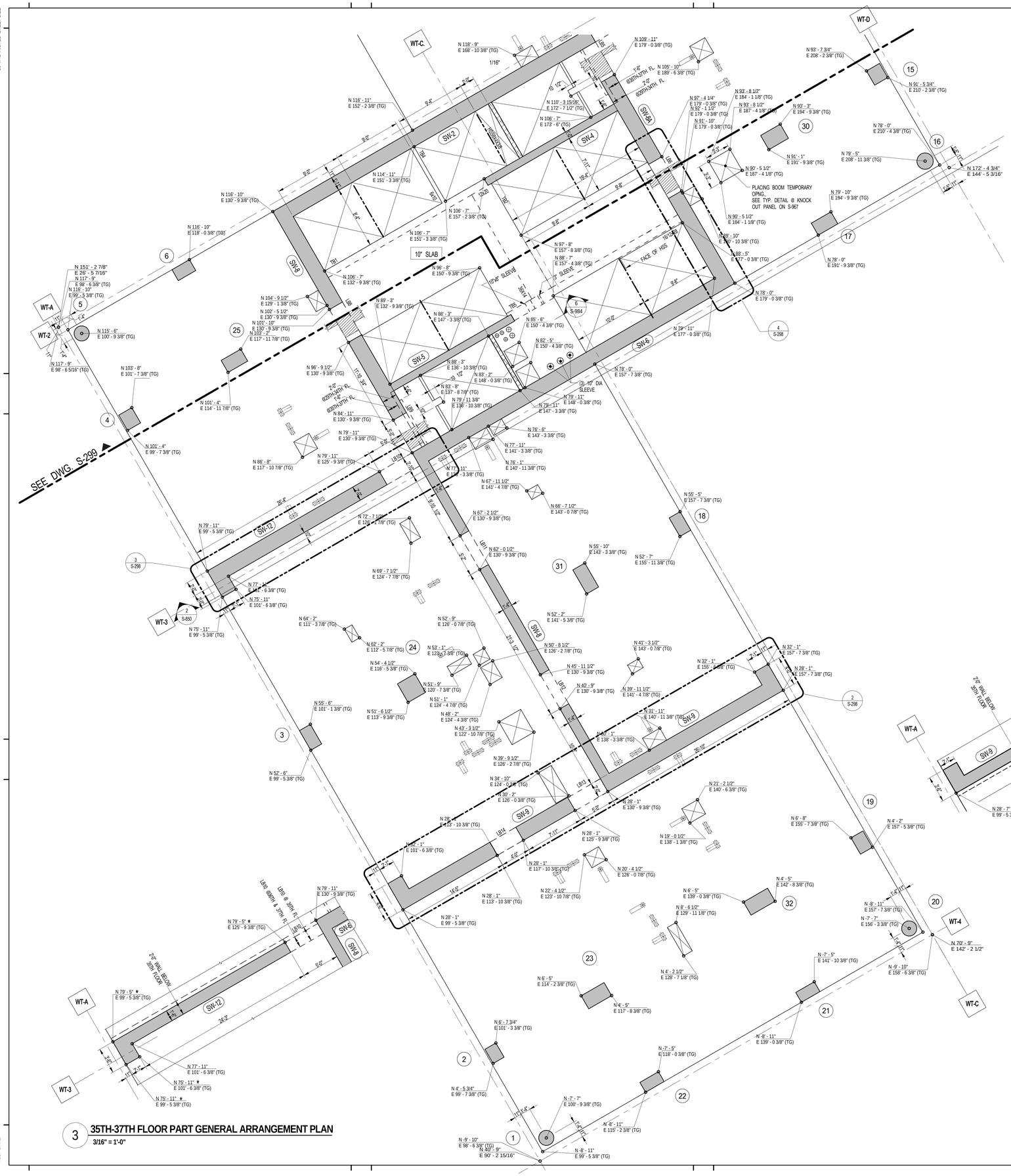

4 35TH-37TH FLOOR PART GENERAL ARRANGEMENT PLAN

3/16" = 1'-0"

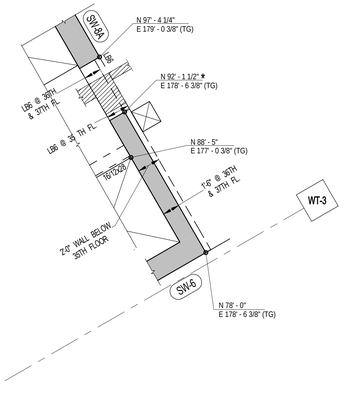

2 35TH-37TH FLOOR PART GENERAL ARRANGEMENT PLAN

3/16" = 1'-0"

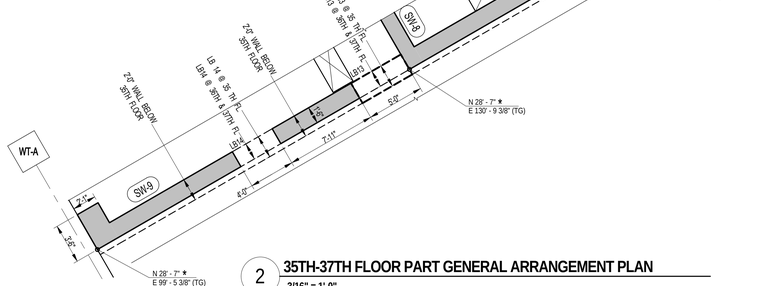

3 35TH-37TH FLOOR PART GENERAL ARRANGEMENT PLAN

3/16" = 1'-0"

1 29TH-37TH FLOOR GENERAL ARRANGEMENT PLAN - PART 1

S-298 SCALE: 3/16" = 1'-0"

NOTES:

1. TOP OF SLAB ELEVATION TO BE: U.O.N. ON PLAN

29TH FLOOR	328'-4"
30TH FLOOR	338'-4"
31ST FLOOR	348'-4"
32ND FLOOR	358'-4"
33RD FLOOR	368'-4"
34TH FLOOR	378'-4"
35TH FLOOR	389'-5"
36TH FLOOR	399'-5"
37TH FLOOR	409'-5"
38TH FLOOR	419'-5"
39TH FLOOR	429'-5"
40TH FLOOR	439'-5"
41ST FLOOR	449'-5"
42ND FLOOR	459'-5"
43RD FLOOR	469'-5"
44TH FLOOR	480'-6"
45TH FLOOR	490'-6"
46TH FLOOR	500'-6"
47TH FLOOR	510'-6"

2. SLAB TO BE 9" THICK U.O.N. THUS
3. FOR BALANCE OF NOTES SEE DRAWING S-001

KEY PLAN:

PROJECT NORTH / TRUE NORTH

DEVELOPER:
EXTELL DEVELOPMENT COMPANY
805 Third Ave, 7th Floor
New York, NY 10022
TEL: 212-712-6000 FAX: 212-712-6100

ARCHITECT OF RECORD:
AAI ARCHITECTS, P.C.
14 Wall Street, 2nd Floor
New York, NY 10005
TEL: 212-964-4040 FAX: 212-964-4090

INTERIOR DESIGNER:
MEYER DAVIS
180 Varick St, suite 404
New York, NY 10014
TEL: 212-627-5574

LANDSCAPE DESIGNER:
WEST 8 URBAN DESIGN & LANDSCAPE ARCHITECTURE P.C.
333 Hudson Street, Suite 905
New York, NY 10013
TEL: 212-285-0088 FAX: 212-285-0228

STRUCTURAL ENGINEERS:
WSP
228 East 45th Street
New York, NY 10017
TEL: 212-687-9888 FAX: 646-487-5501

MEP ENGINEERS:
ICOR ASSOCIATES, LLC
485 C Route 1 South, Suite 200
Iseline, NJ 08830
TEL: 908-272-3300 FAX: 908-272-4440

GEOTECHNICAL ENGINEERS:
LANGAN ENGINEERING & ENVIRONMENTAL SERVICES
21 Penn Plaza - 360 West 31st Street, 8th Floor
New York, NY 10001
TEL: 212.479.5400 FAX: 212.479.5444

No.	DESCRIPTION:	DATE:
	ISSUE FOR CONSTRUCTION	03-18-16
1	ASI #63	05-06-16
2	ASI #66	06-03-16
3	ASI #67	06-17-16
4	ASI #75	10-10-16
5	ASI #80	12-09-16
6	ASI #82	01-16-17
	ISSUED FOR FILING	05-22-17

Discrepancies must be reported immediately to the Architect before proceeding. Only figured dimensions are to be used. Contractors must check all dimensions on site. This drawing is protected by copyright.

ALL DIMENSIONS ARE SHOWN IN IMPERIAL.

CONSULTANT: WSP

PROJECT:
252 SOUTH STREET
NEW YORK, NY

DRAWING TITLE:
29TH-37TH FLOOR GENERAL ARRANGEMENT PLAN - PART 1

SEAL & SIGNATURE:

DATE:	08/07/15
PROJECT No:	1302510
DRAWN:	CAD
CHK:	CL
SCALE:	As indicated
REV:	
DWG No:	S-298.00
DOB PAGE No:	of

DOB EMPLOYEE STAMP:

Tina Mathew, RA
Buildings
APPROVED
Under Directive 2 of 1975
AMENDED APPLICATION
Date: 10/23/2017
NYC Development Hub

DOB B-SCAN:

FILE NAME:
PLOT DATE:

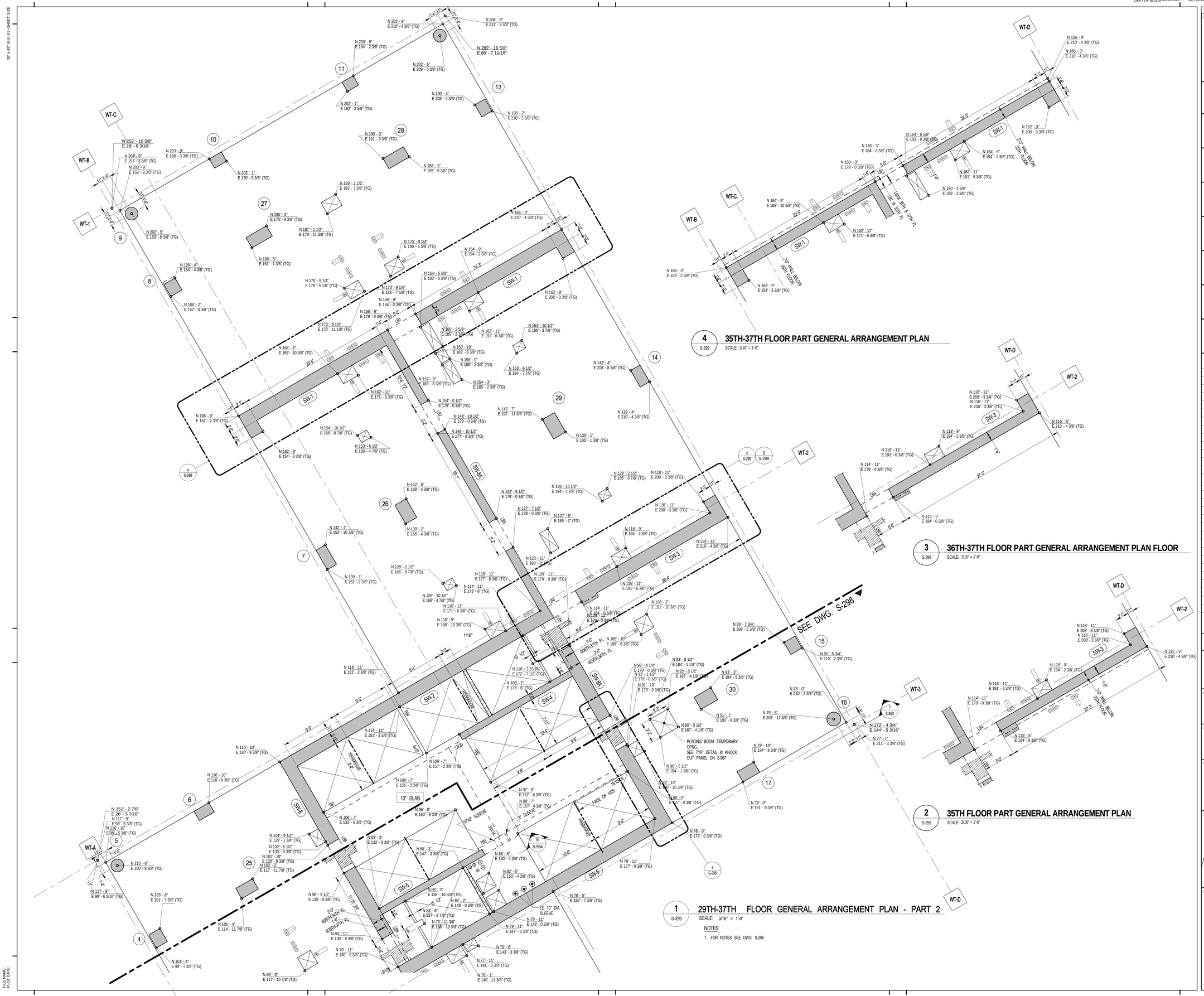

4 S-299 **35TH-37TH FLOOR PART GENERAL ARRANGEMENT PLAN**
SCALE: 3/16" = 1'-0"

3 S-299 **36TH-37TH FLOOR PART GENERAL ARRANGEMENT PLAN FLOOR**
SCALE: 3/16" = 1'-0"

2 S-299 **35TH FLOOR PART GENERAL ARRANGEMENT PLAN**
SCALE: 3/16" = 1'-0"

1 S-299 **29TH-37TH FLOOR GENERAL ARRANGEMENT PLAN - PART 2**
SCALE: 3/16" = 1'-0"

NOTES:
1. FOR NOTES SEE DWG. S-298.

KEY PLAN:

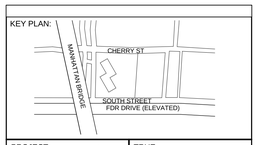

PROJECT NORTH | TRUE NORTH

DEVELOPER:
EXTELL DEVELOPMENT COMPANY
805 Third Ave, 7th Floor
New York, NY 10022
TEL: 212-712-6000 FAX: 212-712-6100

ARCHITECT OF RECORD:
AAI ARCHITECTS, P.C.
14 Wall Street, 2nd Floor
New York, NY 10005
TEL: 212-964-4040 FAX: 212-964-4090

INTERIOR DESIGNER:
MEYER DAVIS
180 Varick St, suite 404
New York, NY 10014
TEL: 212-627-5574

LANDSCAPE DESIGNER:
WEST 8 URBAN DESIGN & LANDSCAPE ARCHITECTURE P.C.
333 Hudson Street, Suite 905
New York, NY 10013
TEL: 212-285-0088 FAX: 212-285-0228

STRUCTURAL ENGINEERS:
WSP
228 East 45th Street
New York, NY 10017
TEL: 212-687-9888 FAX: 646-487-5501

MEP ENGINEERS:
ICOR ASSOCIATES, LLC
485 C Route 1 South, Suite 200
Iseline, NJ 08830
TEL: 908-272-3300 FAX: 908-272-4440

GEOTECHNICAL ENGINEERS:
LANGAN ENGINEERING & ENVIRONMENTAL SERVICES
21 Penn Plaza - 360 West 31st Street, 8th Floor
New York, NY 10001
TEL: 212.479.5400 FAX: 212.479.5444

No.	DESCRIPTION:	DATE:
	ISSUE FOR CONSTRUCTION	03-18-16
1	ASI #63	05-06-16
2	ASI #66	06-03-16
3	ASI #67	06-17-16
4	ASI #75	10-10-16
5	ASI #80	12-09-16
6	ASI #82	01-16-17
	ISSUED FOR FILING	05-22-17

Discrepancies must be reported immediately to the Architect before proceeding. Only figured dimensions are to be used. Contractors must check all dimensions on site. This drawing is protected by copyright.

ALL DIMENSIONS ARE SHOWN IN IMPERIAL.

CONSULTANT:
WSP

PROJECT:
252 SOUTH STREET
NEW YORK, NY

DRAWING TITLE:
29TH-37TH FLOOR GENERAL ARRANGEMENT PLAN - PART 2

SEAL & SIGNATURE:
STATE OF NEW YORK · AHMAD RAHMAN · No. 065557 · LICENSED PROFESSIONAL ENGINEER

DATE:	08/07/15
PROJECT No:	1302510
DRAWN: CAD	REV:
CHK: CL	
SCALE: As indicated	
DWG No:	S-299.00
DOB PAGE No:	of

DOB EMPLOYEE STAMP:
Tina Mathew, RA
APPROVED
Under Directive 2 of 1975
AMENDED APPLICATION
Date: 10/23/2017
NYC Development Hub

DOB B-SCAN:

30" x 42" Arch E1 - SHEET SIZE

FILE NAME:
PLOT DATE:

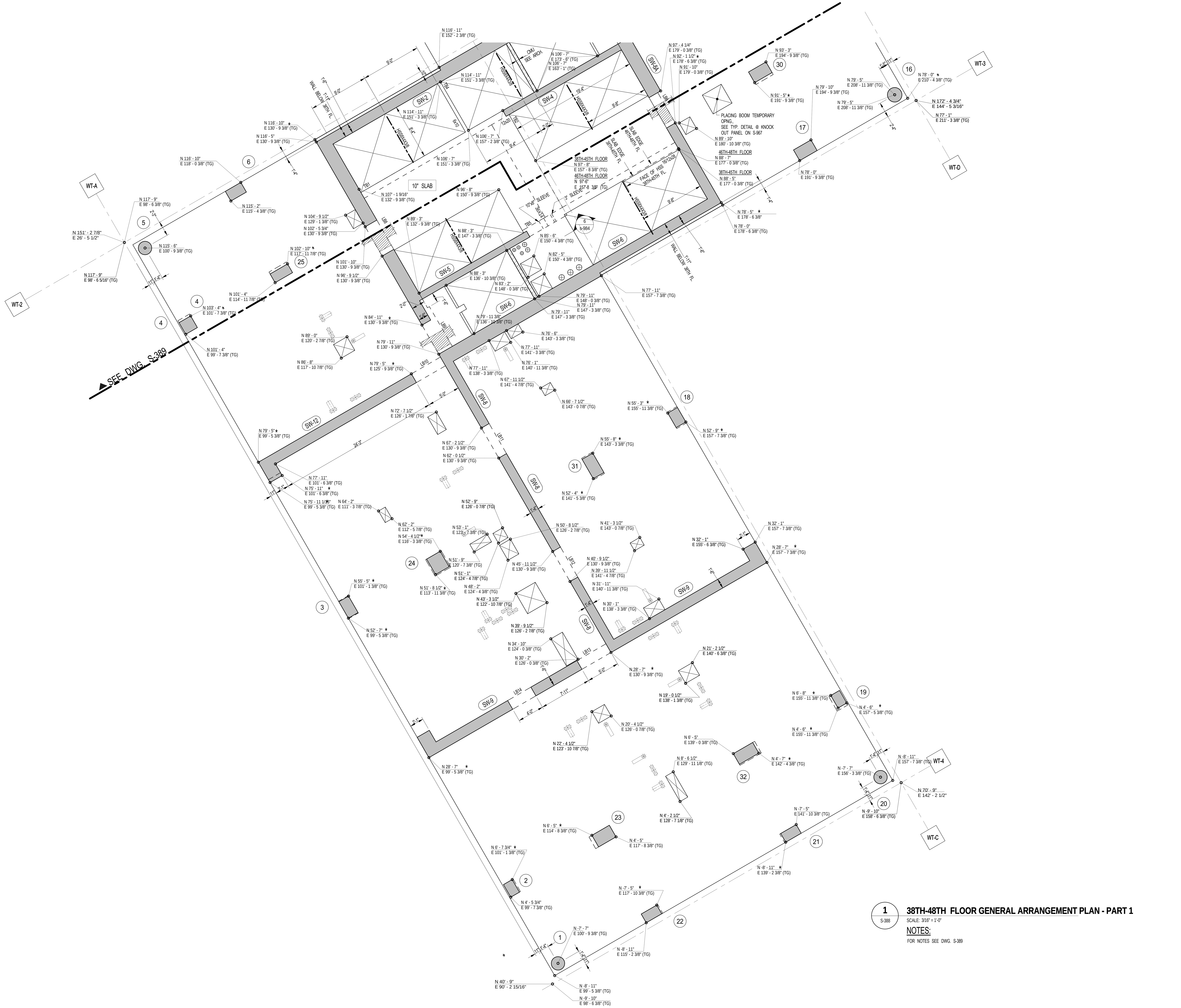

1 S-388 **38TH-48TH FLOOR GENERAL ARRANGEMENT PLAN - PART 1**

SCALE: 3/16" = 1'-0"

NOTES:

FOR NOTES SEE DWG. S-389

KEY PLAN:

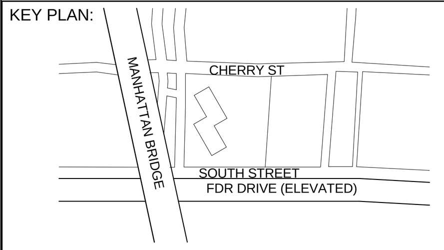

PROJECT NORTH

TRUE NORTH

DEVELOPER:
EXTELL DEVELOPMENT COMPANY
805 Third Ave, 7th Floor
New York, NY 10022
TEL: 212-712-6000 FAX: 212-712-6100

ARCHITECT OF RECORD:
AAI ARCHITECTS, P.C.
14 Wall Street, 2nd Floor
New York, NY 10005
TEL: 212-964-4040 FAX: 212-964-4090

INTERIOR DESIGNER:
MEYER DAVIS
180 Varick St, suite 404
New York, NY 10014
TEL: 212-627-5574

LANDSCAPE DESIGNER:
WEST 8 URBAN DESIGN & LANDSCAPE ARCHITECTURE P.C.
333 Hudson Street, Suite 905
New York, NY 10013
TEL: 212-285-0088 FAX: 212-285-0228

STRUCTURAL ENGINEERS:
WSP
228 East 45th Street
New York, NY 10017
TEL: 212-687-9888 FAX: 646-487-5501

MEP ENGINEERS:
ICOR ASSOCIATES, LLC
485 C Route 1 South, Suite 200
Iseline, NJ 08830
TEL: 908-272-3300 FAX: 908-272-4440

GEOTECHNICAL ENGINEERS:
LANGAN ENGINEERING & ENVIRONMENTAL SERVICES
21 Penn Plaza - 360 West 31st Street, 8th Floor
New York, NY 10001
TEL: 212.479.5400 FAX: 212.479.5444

No.	DESCRIPTION:	DATE:
	ISSUE FOR CONSTRUCTION	03-18-16
1	ASI #66	06-03-16
2	ASI #67	06-17-16
3	ASI #75	10-10-16
4	ASI #80	12-09-16
5	ASI #82	01-16-17
6	ASI #85	03-01-17
	ISSUED FOR FILING	05-22-17

Discrepancies must be reported immediately to the Architect before proceeding. Only figured dimensions are to be used. Contractors must check all dimensions on site. This drawing is protected by copyright.

ALL DIMENSIONS ARE SHOWN IN IMPERIAL.

CONSULTANT:
WSP

PROJECT:
252 SOUTH STREET
NEW YORK, NY

DRAWING TITLE:
38TH-48TH FLOOR GENERAL ARRANGEMENT PLAN - PART 1

SEAL & SIGNATURE:

DATE:	03/14/16
PROJECT No:	1302510
DRAWN: CAD	REV:
CHK: CL	
SCALE: 3/16" = 1'-0"	
DWG No:	**S-388.00**
DOB PAGE No: of	

DOB EMPLOYEE STAMP:

Tina Mathew, RA
APPROVED
Under Directive 2 of 1975
AMENDED APPLICATION
Date: 10/23/2017
NYC Development Hub

DOB B-SCAN:

DEPT OF BLDGS121185539 Job Number
E381504486I93 Scan Code
30" x 42" Anh E1 SHEET SIZE

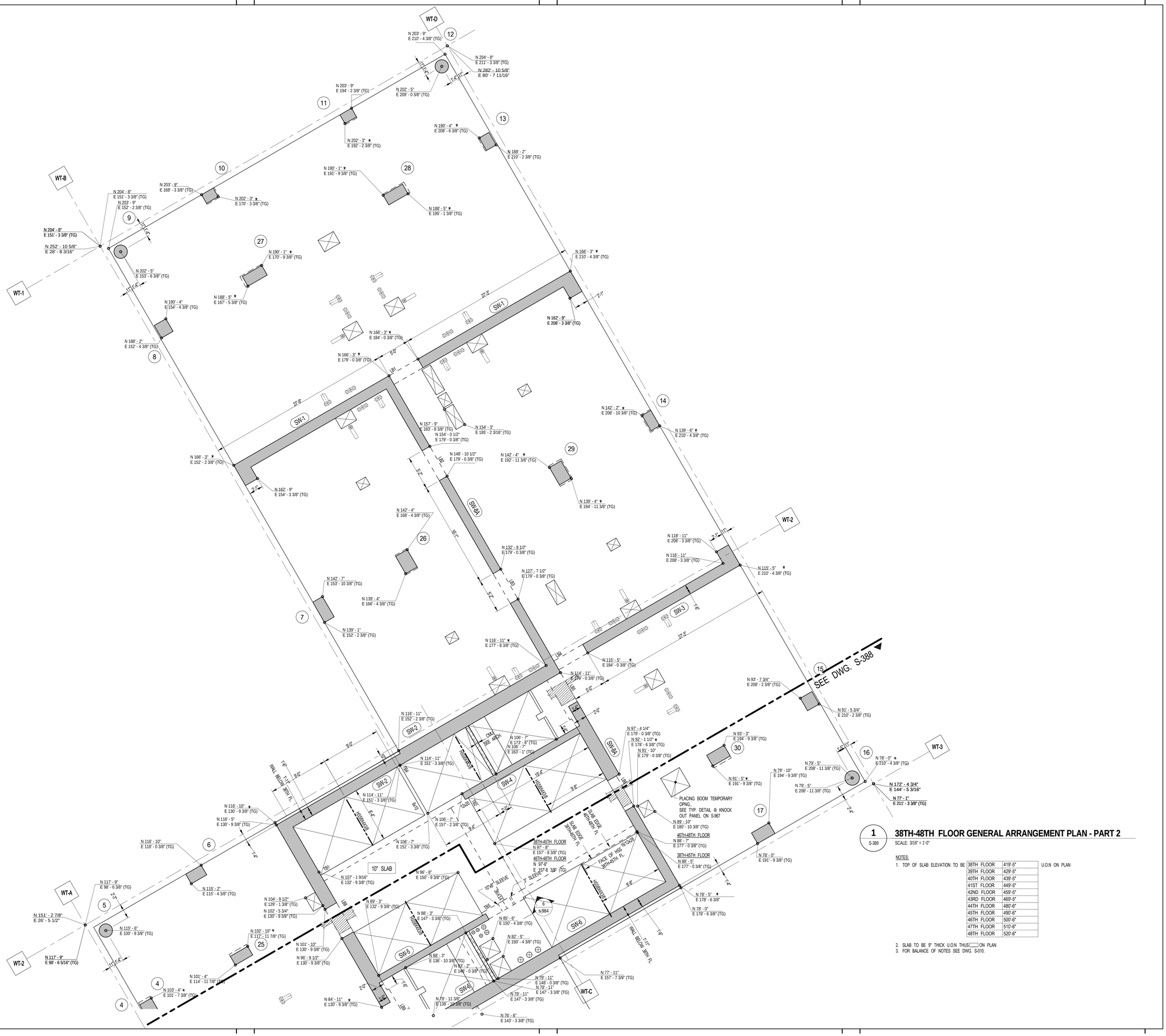

1 S-389 38TH-48TH FLOOR GENERAL ARRANGEMENT PLAN - PART 2

SCALE: 3/16" = 1'-0"

NOTES:

1. TOP OF SLAB ELEVATION TO BE U.O.N ON PLAN

38TH FLOOR	419'-5"
39TH FLOOR	429'-5"
40TH FLOOR	439'-5"
41ST FLOOR	449'-5"
42ND FLOOR	459'-5"
43RD FLOOR	469'-5"
44TH FLOOR	480'-6"
45TH FLOOR	490'-6"
46TH FLOOR	500'-6"
47TH FLOOR	510'-6"
48TH FLOOR	520'-6"

2. SLAB TO BE 9" THICK U.O.N THUS ▭ ON PLAN
3. FOR BALANCE OF NOTES SEE DWG. S-010.

KEY PLAN:

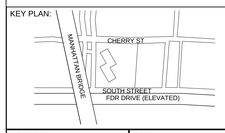

PROJECT NORTH / TRUE NORTH

DEVELOPER:
EXTELL DEVELOPMENT COMPANY
805 Third Ave, 7th Floor
New York, NY 10022
TEL: 212-712-6000 FAX: 212-712-6100

ARCHITECT OF RECORD:
AAI ARCHITECTS, P.C.
14 Wall Street, 2nd Floor
New York, NY 10005
TEL: 212-964-4040 FAX: 212-964-4090

INTERIOR DESIGNER:
MEYER DAVIS
180 Varick St, suite 404
New York, NY 10014
TEL: 212-627-5574

LANDSCAPE DESIGNER:
WEST 8 URBAN DESIGN & LANDSCAPE ARCHITECTURE P.C.
333 Hudson Street, Suite 905
New York, NY 10013
TEL: 212-285-0088 FAX: 212-285-0228

STRUCTURAL ENGINEERS:
WSP
228 East 45th Street
New York, NY 10017
TEL: 212-687-9888 FAX: 646-487-5501

MEP ENGINEERS:
ICOR ASSOCIATES, LLC
485 C Route 1 South, Suite 200
Iseline, NJ 08830
TEL: 908-272-3300 FAX: 908-272-4440

GEOTECHNICAL ENGINEERS:
LANGAN ENGINEERING & ENVIRONMENTAL SERVICES
21 Penn Plaza - 360 West 31st Street, 8th Floor
New York, NY 10001
TEL: 212.479.5400 FAX: 212.479.5444

No.	DESCRIPTION:	DATE:
	ISSUE FOR CONSTRUCTION	03-18-16
1	ASI #66	06-03-16
2	ASI #75	10-10-16
3	ASI #80	12-09-16
4	ASI #82	01-16-17
5	ASI #85	03-01-17
	ISSUED FOR FILING	05-22-17

Discrepancies must be reported immediately to the Architect before proceeding. Only figured dimensions are to be used. Contractors must check all dimensions on site. This drawing is protected by copyright.

ALL DIMENSIONS ARE SHOWN IN IMPERIAL.

CONSULTANT: WSP

PROJECT:
252 SOUTH STREET
NEW YORK, NY

DRAWING TITLE:
38TH-48TH FLOOR GENERAL ARRANGEMENT PLAN - PART 1

SEAL & SIGNATURE: STATE OF NEW YORK · AHMAD RAHIMIAN · No. 085037 · LICENSED PROFESSIONAL ENGINEER

DATE: 03/14/16
PROJECT No: 1302510
DRAWN: CAD REV:
CHK: CL
SCALE: 3/16" = 1'-0"
DWG No: **S-389.00**
DOB PAGE No: of

DOB EMPLOYEE STAMP: Tina Mathew, RA — APPROVED Under Directive 2 of 1975 AMENDED APPLICATION Date: 10/23/2017 NYC Development Hub

DOB B-SCAN:

FILE NAME:
PLOT DATE:

DEPT OF BLDGS121185539 Job Number
E350913967 92 Scan Code

30" x 42" Arch E1 - SHEET SIZE

1 S-490 **49TH FLOOR (MECHANICAL) FRAMING PLAN**

SCALE: 3/32" = 1'-0"

NOTES:

1. TOP OF SLAB ELEVATION TO BE 533'-8" U.O.N. ON PLAN
2. SLAB TO BE 12" THICK U.O.N. THUS ▭ ON PLAN.
3. TOP & BOTTOM REINFORCEMENT TO BE #5@12 CONT. E.W. FOR 12" & #5@6 CONT. E.W. FOR 16" SLAB U.O.N. ON PLAN. FOR ADDITIONAL REINFORCEMENT SEE PLAN.
4. FOR BALANCE OF NOTES SEE DRAWING S-010.
5. FOR STR. INTEGRITY REINF. ADDL INFORMATION SEE S-965.

49TH FLOOR BEAM SCHEDULE

BEAM MARK	SIZE WIDTH	SIZE DEPTH	REINFORCEMENT BOTTOM CONTINUOUS	REINFORCEMENT TOP CONTINUOUS	STIRRUPS TYPE	STIRRUPS SIZE	STIRRUPS SPACING	REMARKS
49B1	12	58	4-#11 (2 LAYERS)	2-#6	1	#4	@12	
49B2	12	52	4-#11 (2 LAYERS)	2-#6	1	#4	@12	
49B3	6	36	1-#8	1-#8	1A	#4	@8	#6@8 HORIZ.
49B4	12	34/52	4-#11 (2 LAYERS)	2-#6	1	#4	@6/@12	#6@6 HORIZ AT DEPTH CHANGE

TYPE 1 TYPE 1A

STIRRUP TYPES

KEY PLAN:

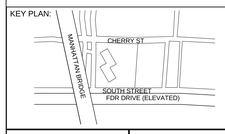

PROJECT NORTH

TRUE NORTH

DEVELOPER:
EXTELL DEVELOPMENT COMPANY
805 Third Ave, 7th Floor
New York, NY 10022
TEL: 212-712-6000 FAX: 212-712-6100

ARCHITECT OF RECORD:
AAI ARCHITECTS, P.C.
14 Wall Street, 2nd Floor
New York, NY 10005
TEL: 212-964-4040 FAX: 212-964-4090

INTERIOR DESIGNER:
MEYER DAVIS
180 Varick St, suite 404
New York, NY 10014
TEL: 212-627-5574

LANDSCAPE DESIGNER:
WEST 8 URBAN DESIGN & LANDSCAPE ARCHITECTURE P.C.
333 Hudson Street, Suite 905
New York, NY 10013
TEL: 212-285-0088 FAX: 212-285-0228

STRUCTURAL ENGINEERS:
WSP
228 East 45th Street
New York, NY 10017
TEL: 212-687-9888 FAX: 646-487-5501

MEP ENGINEERS:
ICOR ASSOCIATES, LLC
485 C Route 1 South, Suite 200
Iselin, NJ 08830
TEL: 908-272-3300 FAX: 908-272-4440

GEOTECHNICAL ENGINEERS:
LANGAN ENGINEERING & ENVIRONMENTAL SERVICES
21 Penn Plaza - 360 West 31st Street, 8th Floor
New York, NY 10001
TEL: 212.479.5400 FAX: 212.479.5444

No.	DESCRIPTION:	DATE:
	50% SD	02-28-14
	100%SD	04-25-14
	50% DD	08-01-14
	DESIGN DEVELOPMENT	10-07-14
	CONCRETE BID PACKAGE	03-06-15
	50% CONSTRUCTION DOCUMENTS	04-08-15
	ISSUED FOR FILING	07-28-15
	80% CONSTRUCTION DOCUMENTS	08-14-15
	ASI #13	08-26-15
1	ASI #82	01-16-17
2	ASI #87	03-31-17
3	ISSUED FOR FILING	05-22-17

Discrepancies must be reported immediately to the Architect before proceeding. Only figured dimensions are to be used. Contractors must check all dimensions on site. This drawing is protected by copyright.

ALL DIMENSIONS ARE SHOWN IN IMPERIAL.

CONSULTANT:

WSP

PROJECT:

252 SOUTH STREET
NEW YORK, NY

DRAWING TITLE:

49TH FLOOR (MECHANICAL)
OVERALL FRAMING PLAN

SEAL & SIGNATURE:

STATE OF NEW YORK — AHMAD RAMADAN — No. 085557 — LICENSED PROFESSIONAL ENGINEER

DATE:	02/28/14
PROJECT No:	1302510
DRAWN: CAD	REV:
CHK: CL	
SCALE:	
DWG No:	**S-490.02**
DOB PAGE No:	of

DOB EMPLOYEE STAMP:

Tina Mathew, RA
APPROVED
Under Directive 2 of 1975
AMENDED APPLICATION
Date: 10/23/2017
NYC Development Hub

DOB B-SCAN:

FILE NAME:
PLOT DATE:

DEPT OF BLDGS 121805639 Job Number
E3611177284 Scan Code

30" x 42" Arch E1 - SHEET SIZE

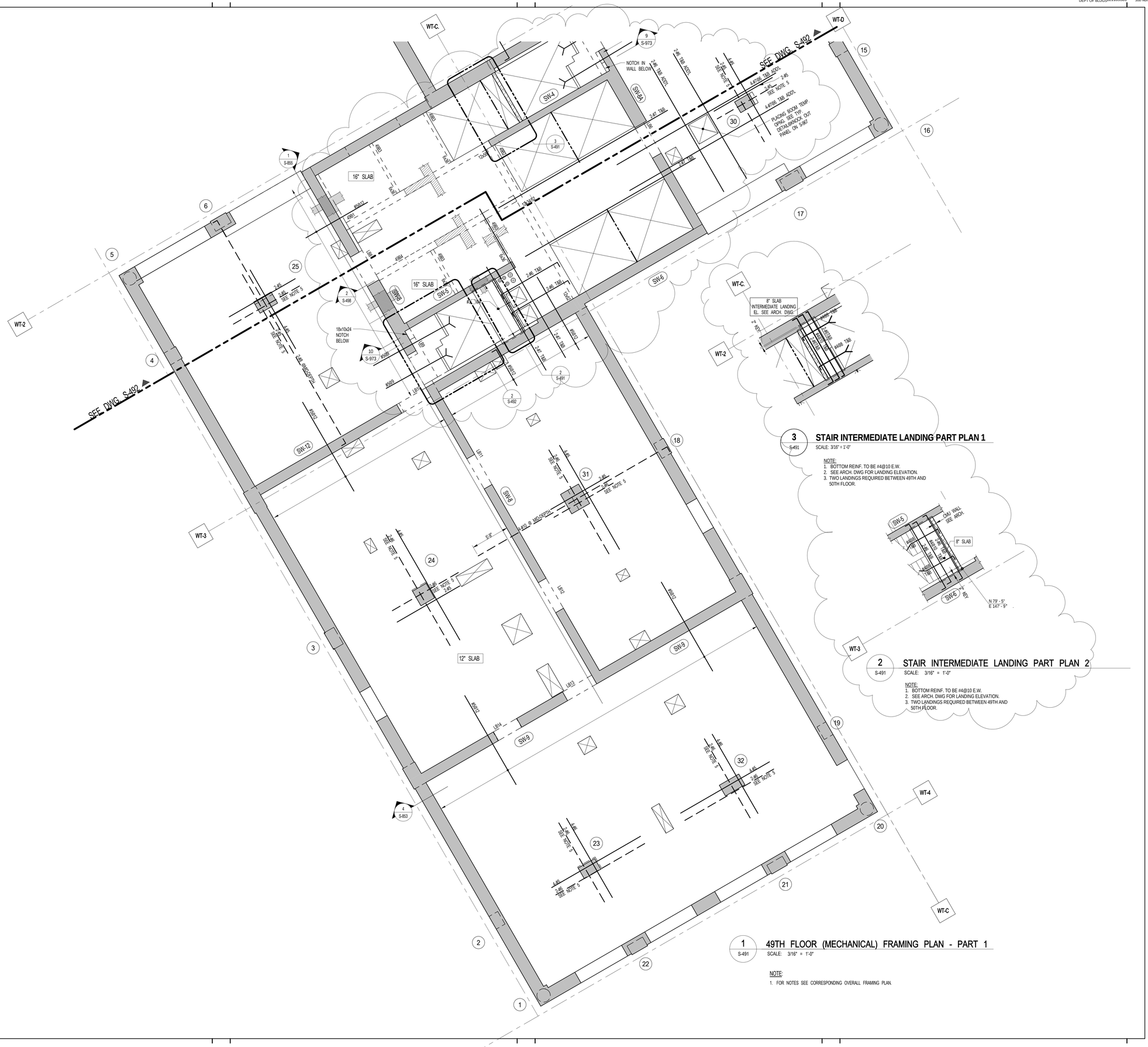

3 S-491 STAIR INTERMEDIATE LANDING PART PLAN 1

SCALE: 3/16" = 1'-0"

NOTE:
1. BOTTOM REINF. TO BE #4@10 E.W.
2. SEE ARCH. DWG FOR LANDING ELEVATION.
3. TWO LANDINGS REQUIRED BETWEEN 49TH AND 50TH FLOOR.

2 S-491 STAIR INTERMEDIATE LANDING PART PLAN 2

SCALE: 3/16" = 1'-0"

NOTE:
1. BOTTOM REINF. TO BE #4@10 E.W.
2. SEE ARCH. DWG FOR LANDING ELEVATION.
3. TWO LANDINGS REQUIRED BETWEEN 49TH AND 50TH FLOOR.

1 S-491 49TH FLOOR (MECHANICAL) FRAMING PLAN - PART 1

SCALE: 3/16" = 1'-0"

NOTE:
1. FOR NOTES SEE CORRESPONDING OVERALL FRAMING PLAN.

KEY PLAN:

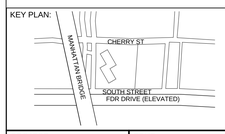

PROJECT NORTH

TRUE NORTH

DEVELOPER:
EXTELL DEVELOPMENT COMPANY
805 Third Ave, 7th Floor
New York, NY 10022
TEL: 212-712-6000 FAX: 212-712-6100

ARCHITECT OF RECORD:
AAI ARCHITECTS, P.C.
14 Wall Street, 2nd Floor
New York, NY 10005
TEL: 212-964-4040 FAX: 212-964-4090

INTERIOR DESIGNER:
MEYER DAVIS
180 Varick St, suite 404
New York, NY 10014
TEL: 212-627-5574

LANDSCAPE DESIGNER:
WEST 8 URBAN DESIGN & LANDSCAPE ARCHITECTURE P.C.
333 Hudson Street, Suite 905
New York, NY 10013
TEL: 212-285-0088 FAX: 212-285-0228

STRUCTURAL ENGINEERS:
WSP
228 East 45th Street
New York, NY 10017
TEL: 212-687-9888 FAX: 646-487-5501

MEP ENGINEERS:
ICOR ASSOCIATES, LLC
485 C Route 1 South, Suite 200
Iseline, NJ 08830
TEL: 908-272-3300 FAX: 908-272-4440

GEOTECHNICAL ENGINEERS:
LANGAN ENGINEERING & ENVIRONMENTAL SERVICES
21 Penn Plaza - 360 West 31st Street, 8th Floor
New York, NY 10001
TEL: 212.479.5400 FAX: 212.479.5444

No.	DESCRIPTION:	DATE:
	DESIGN DEVELOPMENT	10-07-14
	CONCRETE BID PACKAGE	03-06-15
	50% CONSTRUCTION DOCUMENTS	04-08-15
	ISSUED FOR FILING	07-28-15
	80% CONSTRUCTION DOCUMENTS	08-14-15
	ISSUE FOR CONSTRUCTION	03-18-16
1	ASI #82	01-16-17
2	ASI #85	03-01-17
3	ASI #87	03-31-17
4	ISSUED FOR FILING	05-22-17

Discrepancies must be reported immediately to the Architect before proceeding. Only figured dimensions are to be used. Contractors must check all dimensions on site. This drawing is protected by copyright.

ALL DIMENSIONS ARE SHOWN IN IMPERIAL.

CONSULTANT:
WSP

PROJECT:
252 SOUTH STREET
NEW YORK, NY

DRAWING TITLE:
49TH FLOOR (MECHANICAL) FRAMING PLAN - PART 1

SEAL & SIGNATURE:

DATE:	09/26/14
PROJECT No:	1302510
DRAWN: CAD	REV:
CHK: CL	
SCALE:	
DWG No:	**S-491.02**
DOB PAGE No:	of

DOB EMPLOYEE STAMP:

Tina Mathew, RA
APPROVED
Under Directive 2 of 1975
AMENDED APPLICATION
Date: 10/23/2017
NYC Development Hub

DOB B-SCAN:

FILE NAME:
PLOT DATE:

DEPT OF BLDGS 121185528 Job Number
ES103764792 Scan Code

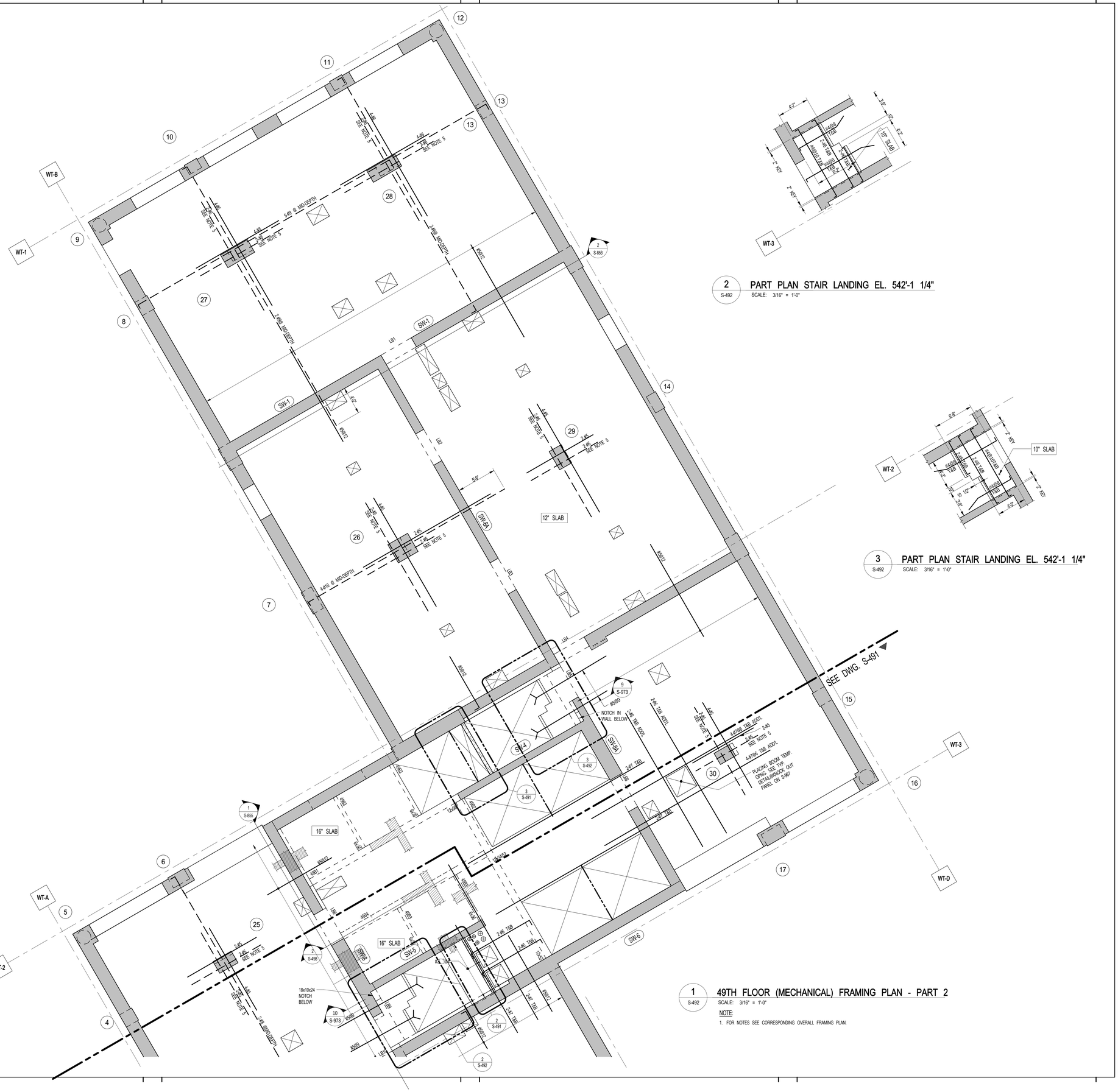

2 S-492 PART PLAN STAIR LANDING EL. 542'-1 1/4"
SCALE: 3/16" = 1'-0"

3 S-492 PART PLAN STAIR LANDING EL. 542'-1 1/4"
SCALE: 3/16" = 1'-0"

1 S-492 49TH FLOOR (MECHANICAL) FRAMING PLAN - PART 2
SCALE: 3/16" = 1'-0"

NOTE:
1. FOR NOTES SEE CORRESPONDING OVERALL FRAMING PLAN.

KEY PLAN:

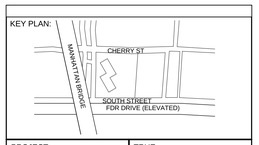

PROJECT NORTH | TRUE NORTH

DEVELOPER:
EXTELL DEVELOPMENT COMPANY
805 Third Ave, 7th Floor
New York, NY 10022
TEL: 212-712-6000 FAX: 212-712-6100

ARCHITECT OF RECORD:
AAI ARCHITECTS, P.C.
14 Wall Street, 2nd Floor
New York, NY 10005
TEL: 212-964-4040 FAX: 212-964-4090

INTERIOR DESIGNER:
MEYER DAVIS
180 Varick St, suite 404
New York, NY 10014
TEL: 212-627-5574

LANDSCAPE DESIGNER:
WEST 8 URBAN DESIGN & LANDSCAPE ARCHITECTURE P.C.
333 Hudson Street, Suite 905
New York, NY 10013
TEL: 212-285-0088 FAX: 212-285-0228

STRUCTURAL ENGINEERS:
WSP
228 East 45th Street
New York, NY 10017
TEL: 212-687-9888 FAX: 646-487-5501

MEP ENGINEERS:
ICOR ASSOCIATES, LLC
485 C Route 1 South, Suite 200
Iseline, NJ 08830
TEL: 908-272-3300 FAX: 908-272-4440

GEOTECHNICAL ENGINEERS:
LANGAN ENGINEERING & ENVIRONMENTAL SERVICES
21 Penn Plaza - 360 West 31st Street, 8th Floor
New York, NY 10001
TEL: 212.479.5400 FAX: 212.479.5444

No.	DESCRIPTION:	DATE:
	DESIGN DEVELOPMENT	10-07-14
	CONCRETE BID PACKAGE	03-06-15
	50% CONSTRUCTION DOCUMENTS	04-08-15
	ISSUED FOR FILING	07-28-15
	80% CONSTRUCTION DOCUMENTS	08-14-15
	ISSUE FOR CONSTRUCTION	03-18-16
1	ASI #82	01-16-17
2	ASI #86	03-17-17
3	ASI #87	03-31-17
4	ISSUED FOR FILING	05-22-17

Discrepancies must be reported immediately to the Architect before proceeding. Only figured dimensions are to be used. Contractors must check all dimensions on site. This drawing is protected by copyright.

ALL DIMENSIONS ARE SHOWN IN IMPERIAL.

CONSULTANT:
WSP

PROJECT:
252 SOUTH STREET
NEW YORK, NY

DRAWING TITLE:
49TH FLOOR (MECHANICAL) FRAMING PLAN - PART 2

SEAL & SIGNATURE:
STATE OF NEW YORK AHMAD RAHMAN No. 065537 LICENSED PROFESSIONAL ENGINEER

DATE:	09/26/14	
PROJECT No:	1302510	
DRAWN:	CAD	REV:
CHK:	CL	
SCALE:		
DWG No:	S-492.02	
DOB PAGE No:	of	

DOB EMPLOYEE STAMP:
Tina Mathew, RA
APPROVED
Under Directive 2 of 1975
AMENDED APPLICATION
Date: 10/23/2017
NYC Development Hub

DOB B-SCAN:

30" x 42" Arch E1 - SHEET SIZE

FILE NAME:
PLOT DATE:

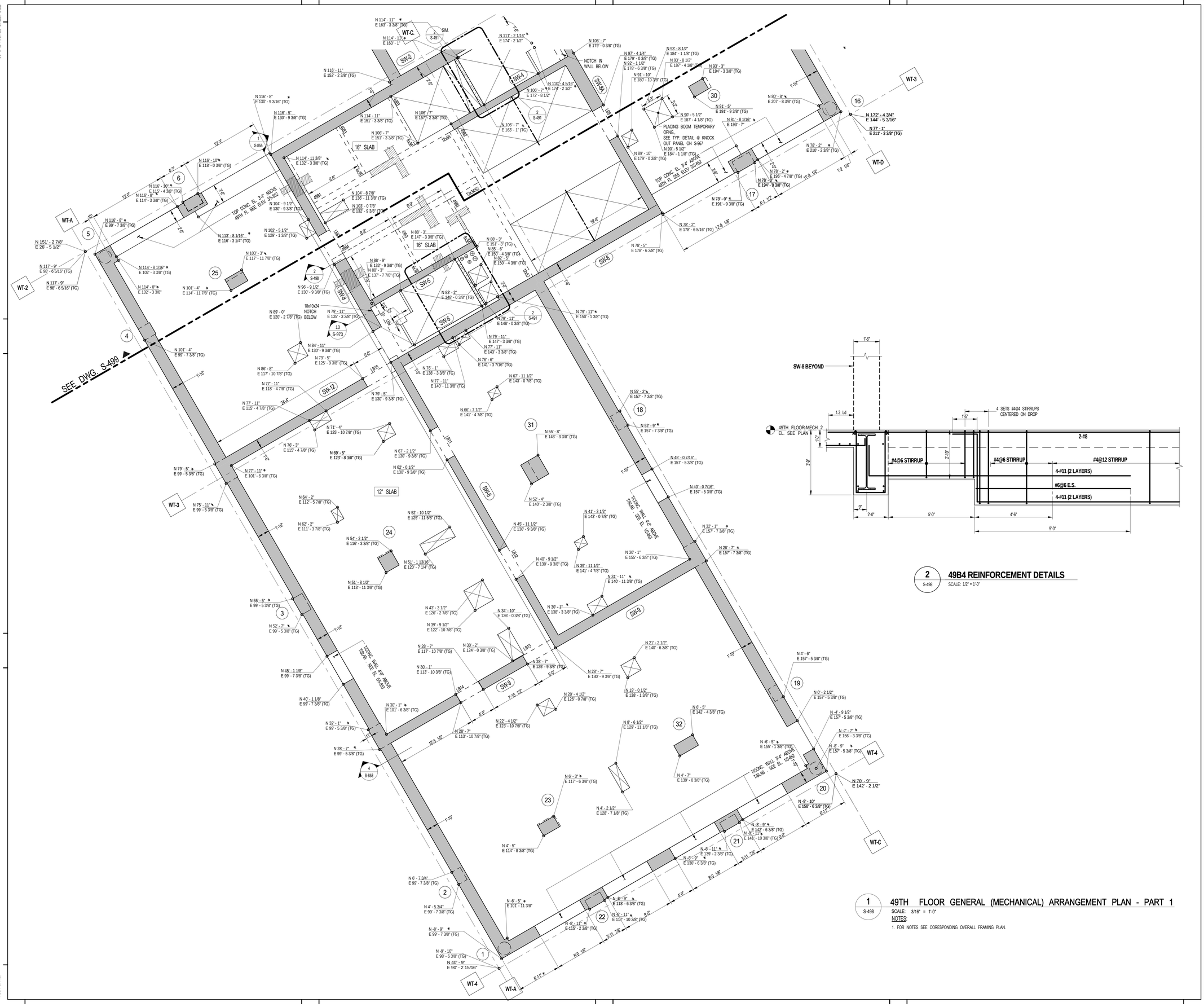

2 S-498 **49B4 REINFORCEMENT DETAILS**
SCALE: 1/2" = 1'-0"

1 S-498 **49TH FLOOR GENERAL (MECHANICAL) ARRANGEMENT PLAN - PART 1**
SCALE: 3/16" = 1'-0"
NOTES:
1. FOR NOTES SEE CORESPONDING OVERALL FRAMING PLAN.

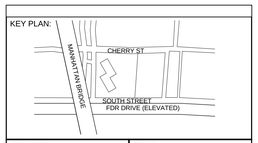

PROJECT NORTH | TRUE NORTH

DEVELOPER:
EXTELL DEVELOPMENT COMPANY
805 Third Ave, 7th Floor
New York, NY 10022
TEL: 212-712-6000 FAX: 212-712-6100

ARCHITECT OF RECORD:
AAI ARCHITECTS, P.C.
14 Wall Street, 2nd Floor
New York, NY 10005
TEL: 212-964-4040 FAX: 212-964-4090

INTERIOR DESIGNER:
MEYER DAVIS
180 Varick St, suite 404
New York, NY 10014
TEL: 212-627-5574

LANDSCAPE DESIGNER:
WEST 8 URBAN DESIGN & LANDSCAPE ARCHITECTURE P.C.
333 Hudson Street, Suite 905
New York, NY 10013
TEL: 212-285-0088 FAX: 212-285-0228

STRUCTURAL ENGINEERS:
WSP
228 East 45th Street
New York, NY 10017
TEL: 212-687-9888 FAX: 646-487-5501

MEP ENGINEERS:
ICOR ASSOCIATES, LLC
485 C Route 1 South, Suite 200
Iseline, NJ 08830
TEL: 908-272-3300 FAX: 908-272-4440

GEOTECHNICAL ENGINEERS:
LANGAN ENGINEERING & ENVIRONMENTAL SERVICES
21 Penn Plaza - 360 West 31st Street, 8th Floor
New York, NY 10001
TEL: 212.479.5400 FAX: 212.479.5444

No.	DESCRIPTION:	DATE:
	ISSUE FOR CONSTRUCTION	03-18-16
1	ASI #82	01-16-17
2	ASI #85	03-01-17
3	ASI #86	03-17-17
4	ASI #87	03-31-17
5	ASI #88	04-14-17
	ISSUED FOR FILING	05-22-17

Discrepancies must be reported immediately to the Architect before proceeding. Only figured dimensions are to be used. Contractors must check all dimensions on site. This drawing is protected by copyright.

ALL DIMENSIONS ARE SHOWN IN IMPERIAL.

CONSULTANT:
WSP

PROJECT:
252 SOUTH STREET
NEW YORK, NY

DRAWING TITLE:
49TH FLOOR GENERAL ARRANGEMENT PLAN - PART 1

SEAL & SIGNATURE:
STATE OF NEW YORK · AHMAD RAHIMIAN · No. 065537 · LICENSED PROFESSIONAL ENGINEER

DATE:	08/07/15
PROJECT No:	1302510
DRAWN: CAD	REV:
CHK: CL	
SCALE: As indicated	
DWG No:	S-498.00
DOB PAGE No:	of

DOB EMPLOYEE STAMP:
Tina Mathew, RA
APPROVED
Under Directive 2 of 1975
AMENDED APPLICATION
Date: 10/23/2017
NYC Development Hub

DOB B-SCAN:

30" x 42" Arch E1 - SHEET SIZE

FILE NAME:
PLOT DATE:

1 S-499 49TH FLOOR (MECHANICAL) FRAMING PLAN

SCALE: 3/16" = 1'-0"

NOTES:

1. FOR NOTES SEE CORESPONDING OVERALL FRAMING PLAN.

KEY PLAN:

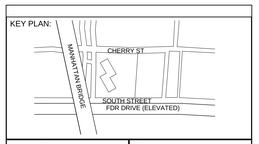

PROJECT NORTH

TRUE NORTH

DEVELOPER:
EXTELL DEVELOPMENT COMPANY
805 Third Ave, 7th Floor
New York, NY 10022
TEL: 212-712-6000 FAX: 212-712-6100

ARCHITECT OF RECORD:
AAI ARCHITECTS, P.C.
14 Wall Street, 2nd Floor
New York, NY 10005
TEL: 212-964-4040 FAX: 212-964-4090

INTERIOR DESIGNER:
MEYER DAVIS
180 Varick St, suite 404
New York, NY 10014
TEL: 212-627-5574

LANDSCAPE DESIGNER:
WEST 8 URBAN DESIGN & LANDSCAPE ARCHITECTURE P.C.
333 Hudson Street, Suite 905
New York, NY 10013
TEL: 212-285-0088 FAX: 212-285-0228

STRUCTURAL ENGINEERS:
WSP
228 East 45th Street
New York, NY 10017
TEL: 212-687-9888 FAX: 646-487-5501

MEP ENGINEERS:
ICOR ASSOCIATES, LLC
485 C Route 1 South, Suite 200
Iseline, NJ 08830
TEL: 908-272-3300 FAX: 908-272-4440

GEOTECHNICAL ENGINEERS:
LANGAN ENGINEERING & ENVIRONMENTAL SERVICES
21 Penn Plaza - 360 West 31st Street, 8th Floor
New York, NY 10001
TEL: 212.479.5400 FAX: 212.479.5444

No.	DESCRIPTION:	DATE:
	ISSUE FOR CONSTRUCTION	03-18-16
1	ASI #82	01-16-17
2	ASI #85	03-01-17
3	ASI #86	03-17-17
4	ASI #87	03-31-17
5	ASI #88	04-14-17
	ISSUED FOR FILING	05-22-17

Discrepancies must be reported immediately to the Architect before proceeding. Only figured dimensions are to be used. Contractors must check all dimensions on site. This drawing is protected by copyright.

ALL DIMENSIONS ARE SHOWN IN IMPERIAL.

CONSULTANT:
WSP

PROJECT:
252 SOUTH STREET
NEW YORK, NY

DRAWING TITLE:
49TH FLOOR GENERAL ARRANGEMENT PLAN - PART 2

SEAL & SIGNATURE:
STATE OF NEW YORK · AHMAD RAHMAN · No. 065537 · LICENSED PROFESSIONAL ENGINEER

DATE:	08/07/15
PROJECT No:	1302510
DRAWN: CAD	REV:
CHK: CL	
SCALE: As indicated	
DWG No:	S-499.00
DOB PAGE No:	of

DOB EMPLOYEE STAMP:
Tina Mathew, RA
APPROVED
Under Directive 2 of 1975
AMENDED APPLICATION
Date: 10/23/2017
NYC Development Hub

DOB B-SCAN:

30" x 42" Arch E1 - SHEET SIZE

FILE NAME:
PLOT DATE:

DEPT OF BLDGS 121185528 Job Number
ES132431933 Scan Code

1 S-500 **50TH FLOOR OVERALL FRAMING PLAN**

SCALE: 3/32" = 1'-0"

NOTES:

1. TOP OF SLAB ELEVATION TO BE 550'-10" U.O.N. ON PLAN
2. SLAB TO BE 12" THICK U.O.N. THUS [ ] ON PLAN.
3. TOP & BOTTOM REINFORCEMENT TO BE #5@12 CONT. E.W. FOR 12" SLAB U.O.N. ON PLAN. FOR ADDITIONAL REIFORCEMENT SEE PLAN
4. FOR BALANCE OF NOTES SEE DRAWING S-010.
5. FOR STR. INTEGRITY REINF. ADD'L INFORMATION SEE S-965.

50TH FLOOR BEAM SCHEDULE

BEAM MARK	SIZE		REINFORCEMENT		STIRRUPS			REMARKS
	WIDTH	DEPTH	BOTTOM CONTINUOUS	TOP CONTINUOUS	TYPE	SIZE	SPACING	
50B1	12	50	2-#10	2-#6	1	#4	@12	
50B2	16	50	2-#10	2-#6	1	#4	@12	

TYPE 1

STIRRUP TYPES

KEY PLAN:

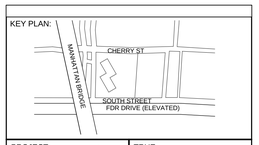

PROJECT NORTH

TRUE NORTH

DEVELOPER:
EXTELL DEVELOPMENT COMPANY
805 Third Ave, 7th Floor
New York, NY 10022
TEL: 212-712-6000 FAX: 212-712-6100

ARCHITECT OF RECORD:
AAI ARCHITECTS, P.C.
14 Wall Street, 2nd Floor
New York, NY 10005
TEL: 212-964-4040 FAX: 212-964-4090

INTERIOR DESIGNER:
MEYER DAVIS
180 Varick St, suite 404
New York, NY 10014
TEL: 212-627-5574

LANDSCAPE DESIGNER:
WEST 8 URBAN DESIGN & LANDSCAPE ARCHITECTURE P.C.
333 Hudson Street, Suite 905
New York, NY 10013
TEL: 212-285-0088 FAX: 212-285-0228

STRUCTURAL ENGINEERS:
WSP
228 East 45th Street
New York, NY 10017
TEL: 212-687-9888 FAX: 646-487-5501

MEP ENGINEERS:
ICOR ASSOCIATES, LLC
485 C Route 1 South, Suite 200
Iseline, NJ 08830
TEL: 908-272-3300 FAX: 908-272-4440

GEOTECHNICAL ENGINEERS:
LANGAN ENGINEERING & ENVIRONMENTAL SERVICES
21 Penn Plaza - 360 West 31st Street, 8th Floor
New York, NY 10001
TEL: 212.479.5400 FAX: 212.479.5444

No.	DESCRIPTION:	DATE:
	50% SD	02-28-14
	100%SD	04-25-14
	50% DD	08-01-14
	DESIGN DEVELOPMENT	10-07-14
	CONCRETE BID PACKAGE	03-06-15
	50% CONSTRUCTION DOCUMENTS	04-08-15
	ISSUED FOR FILING	07-28-15
	80% CONSTRUCTION DOCUMENTS	08-14-15
1	ASI #82	01-16-17
2	ISSUED FOR FILING	05-22-17

Discrepancies must be reported immediately to the Architect before proceeding. Only figured dimensions are to be used. Contractors must check all dimensions on site. This drawing is protected by copyright.

ALL DIMENSIONS ARE SHOWN IN IMPERIAL.

CONSULTANT:

WSP

PROJECT:

252 SOUTH STREET
NEW YORK, NY

DRAWING TITLE:

50TH FLOOR OVERALL FRAMING PLAN

SEAL & SIGNATURE:

STATE OF NEW YORK · AHMAD RAHMAN · No. 065537 · LICENSED PROFESSIONAL ENGINEER

DATE:	02/28/14
PROJECT No:	1302510
DRAWN: CAD	REV:
CHK: CL	
SCALE:	
DWG No:	**S-500.02**
DOB PAGE No:	of

DOB EMPLOYEE STAMP:

Tina Mathew, RA
APPROVED
Under Directive 2 of 1975
AMENDED APPLICATION
Date: 10/23/2017
NYC Development Hub

DOB B-SCAN:

30" x 42" Arch E1 - SHEET SIZE

FILE NAME:
PLOT DATE:

DEPT OF BLDGS121185539 Job Number
E:\349876706 Scan Code
30" x 42" Arch E1 SHEET SIZE

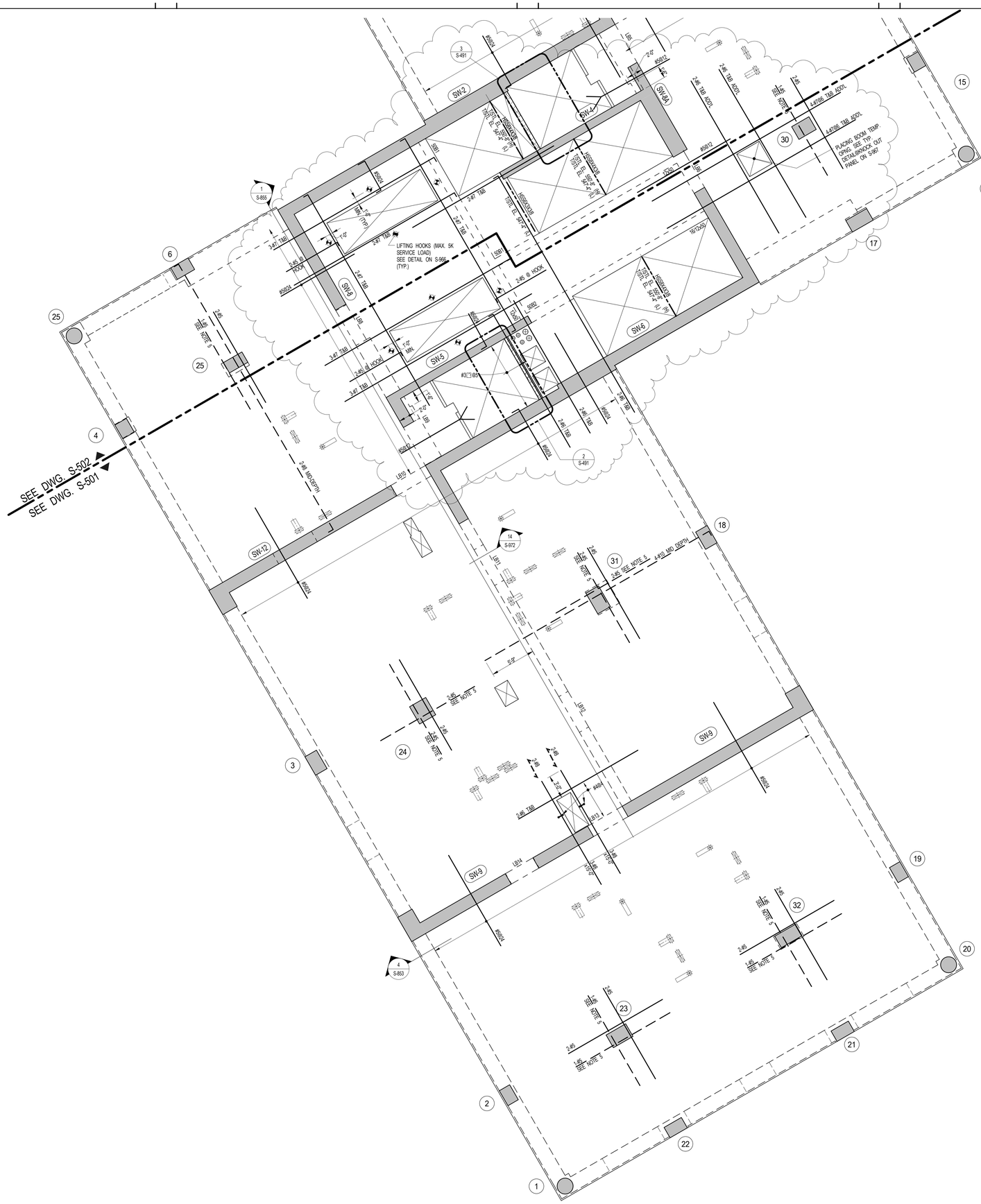

1 S-501 **50TH FLOOR FRAMING PLAN - PART 1**

SCALE: 3/16" = 1'-0"

NOTE:

1. FOR NOTES SEE CORRESPONDING OVERALL FRAMING PLAN.

KEY PLAN:

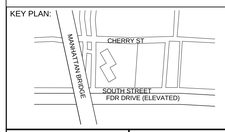

PROJECT NORTH

TRUE NORTH

DEVELOPER:
EXTELL DEVELOPMENT COMPANY
805 Third Ave, 7th Floor
New York, NY 10022
TEL: 212-712-6000 FAX: 212-712-6100

ARCHITECT OF RECORD:
AAI ARCHITECTS, P.C.
14 Wall Street, 2nd Floor
New York, NY 10005
TEL: 212-964-4040 FAX: 212-964-4090

INTERIOR DESIGNER:
MEYER DAVIS
180 Varick St, suite 404
New York, NY 10014
TEL: 212-627-5574

LANDSCAPE DESIGNER:
WEST 8 URBAN DESIGN & LANDSCAPE ARCHITECTURE P.C.
333 Hudson Street, Suite 905
New York, NY 10013
TEL: 212-285-0088 FAX: 212-285-0228

STRUCTURAL ENGINEERS:
WSP
228 East 45th Street
New York, NY 10017
TEL: 212-687-9888 FAX: 646-487-5501

MEP ENGINEERS:
ICOR ASSOCIATES, LLC
485 C Route 1 South, Suite 200
Iseline, NJ 08830
TEL: 908-272-3300 FAX: 908-272-4440

GEOTECHNICAL ENGINEERS:
LANGAN ENGINEERING & ENVIRONMENTAL SERVICES
21 Penn Plaza - 360 West 31st Street, 8th Floor
New York, NY 10001
TEL: 212.479.5400 FAX: 212.479.5444

No.	DESCRIPTION:	DATE:
	DESIGN DEVELOPMENT	10-07-14
	CONCRETE BID PACKAGE	03-06-15
	50% CONSTRUCTION DOCUMENTS	04-08-15
	ISSUED FOR FILING	07-28-15
	80% CONSTRUCTION DOCUMENTS	08-14-15
1	ASI #71	07-29-16
2	ASI #73	08-19-16
3	ASI #82	01-16-17
4	ASI #85	03-01-17
5	ASI #86	03-17-17
6	ASI #88	04-14-17
7	ISSUED FOR FILING	05-22-17

Discrepancies must be reported immediately to the Architect before proceeding. Only figured dimensions are to be used. Contractors must check all dimensions on site. This drawing is protected by copyright.

ALL DIMENSIONS ARE SHOWN IN IMPERIAL.

CONSULTANT:
WSP

PROJECT:
252 SOUTH STREET
NEW YORK, NY

DRAWING TITLE:
50TH FLOOR FRAMING PLAN - PART 1

SEAL & SIGNATURE:
STATE OF NEW YORK · AHMAD RAMADAN · No. 085527 · LICENSED PROFESSIONAL ENGINEER

DATE:	09/26/14
PROJECT No:	1302510
DRAWN: CAD	REV:
CHK: CL	
SCALE:	
DWG No:	**S-501.02**
DOB PAGE No:	of

DOB EMPLOYEE STAMP:
Tina Mathew, RA
APPROVED
Under Directive 2 of 1975
AMENDED APPLICATION
Date: 10/23/2017
NYC Development Hub

DOB B-SCAN:

FILE NAME:
PLOT DATE:

DEPT OF BLDGS121185539 Job Number
E:\2106449990 Scan Code
30" x 42" Arch E1 - SHEET SIZE

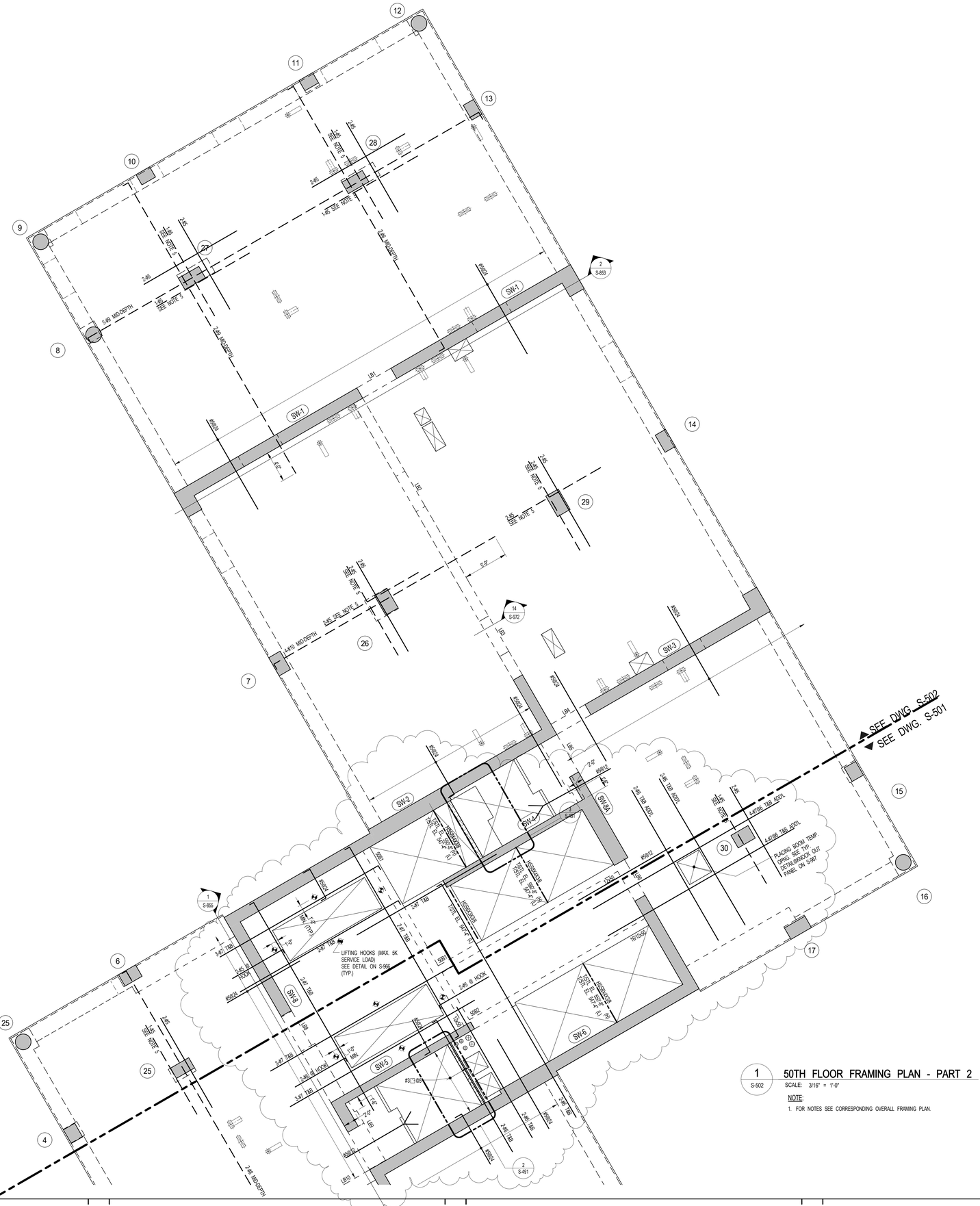

1 S-502 **50TH FLOOR FRAMING PLAN - PART 2**

SCALE: 3/16" = 1'-0"

NOTE:

1. FOR NOTES SEE CORRESPONDING OVERALL FRAMING PLAN.

KEY PLAN:

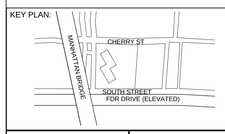

PROJECT NORTH

TRUE NORTH

DEVELOPER:
EXTELL DEVELOPMENT COMPANY
805 Third Ave, 7th Floor
New York, NY 10022
TEL: 212-712-6000 FAX: 212-712-6100

ARCHITECT OF RECORD:
AAI ARCHITECTS, P.C.
14 Wall Street, 2nd Floor
New York, NY 10005
TEL: 212-964-4040 FAX: 212-964-4090

INTERIOR DESIGNER:
MEYER DAVIS
180 Varick St, suite 404
New York, NY 10014
TEL: 212-627-5574

LANDSCAPE DESIGNER:
WEST 8 URBAN DESIGN & LANDSCAPE ARCHITECTURE P.C.
333 Hudson Street, Suite 905
New York, NY 10013
TEL: 212-285-0088 FAX: 212-285-0228

STRUCTURAL ENGINEERS:
WSP
228 East 45th Street
New York, NY 10017
TEL: 212-687-9888 FAX: 646-487-5501

MEP ENGINEERS:
ICOR ASSOCIATES, LLC
485 C Route 1 South, Suite 200
Iseline, NJ 08830
TEL: 908-272-3300 FAX: 908-272-4440

GEOTECHNICAL ENGINEERS:
LANGAN ENGINEERING & ENVIRONMENTAL SERVICES
21 Penn Plaza - 360 West 31st Street, 8th Floor
New York, NY 10001
TEL: 212.479.5400 FAX: 212.479.5444

No.	DESCRIPTION:	DATE:
	DESIGN DEVELOPMENT	10-07-14
	CONCRETE BID PACKAGE	03-06-15
	50% CONSTRUCTION DOCUMENTS	04-08-15
	ISSUED FOR FILING	07-28-15
	80% CONSTRUCTION DOCUMENTS	08-14-15
	ISSUE FOR CONSTRUCTION	03-18-16
1	ASI #71	07-29-16
2	ASI #73	08-19-16
3	ASI #82	01-16-17
4	ASI #85	03-01-17
5	ASI #86	03-17-17
6	ISSUED FOR FILING	05-22-17

Discrepancies must be reported immediately to the Architect before proceeding. Only figured dimensions are to be used. Contractors must check all dimensions on site. This drawing is protected by copyright.

ALL DIMENSIONS ARE SHOWN IN IMPERIAL.

CONSULTANT:

WSP

PROJECT:

252 SOUTH STREET
NEW YORK, NY

DRAWING TITLE:

50TH FLOOR FRAMING PLAN - PART 2

SEAL & SIGNATURE:

STATE OF NEW YORK AHMAD RAHIMIAN No. 065057 LICENSED PROFESSIONAL ENGINEER

DATE:	09/26/14
PROJECT No:	1302510
DRAWN: CAD	REV:
CHK: CL	
SCALE:	
DWG No:	**S-502.02**
DOB PAGE No:	of

DOB EMPLOYEE STAMP:

Tina Mathew, RA
APPROVED
Under Directive 2 of 1975
AMENDED APPLICATION
Date: 10/23/2017
NYC Development Hub

DOB B-SCAN:

FILE NAME:
PLOT DATE:

DEPT OF BLDGS121185503 Job Number
E-5411992281 Scan Code

30" x 42" ANSI E1 - SHEET SIZE

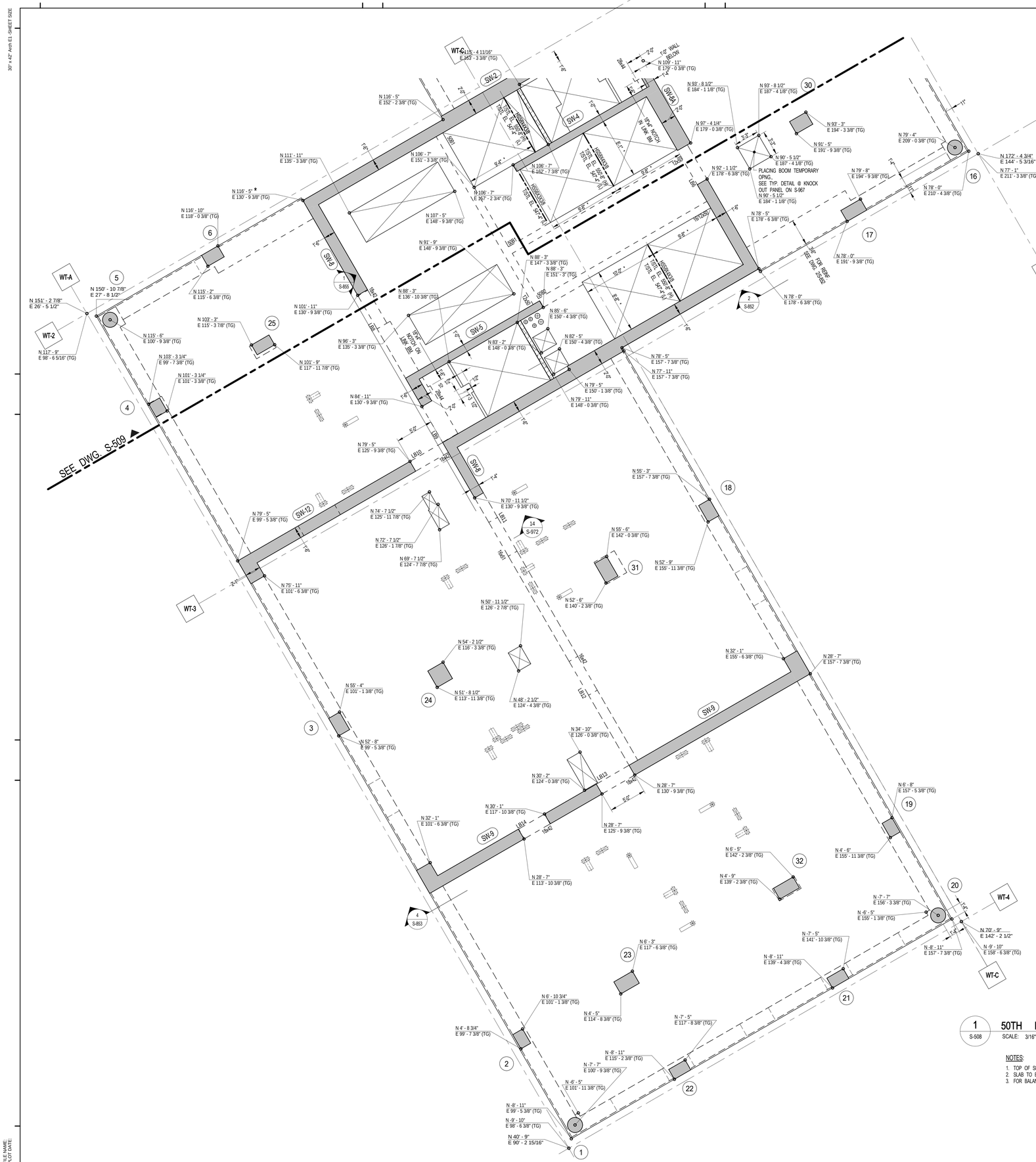

1 S-508 **50TH FLOOR GENERAL ARRANGEMENT PLAN - PART 1**
SCALE: 3/16" = 1'-0"

NOTES:
1. TOP OF SLAB ELEVATION TO BE 550'-10"U.O.N. ON PLAN
2. SLAB TO BE 12" THICK U.O.N. THUS ▭ ON PLAN.
3. FOR BALANCE OF NOTES SEE DRAWING S-010.

KEY PLAN:

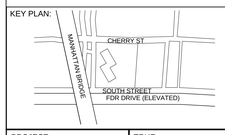

PROJECT NORTH / TRUE NORTH

DEVELOPER:
EXTELL DEVELOPMENT COMPANY
805 Third Ave, 7th Floor
New York, NY 10022
TEL: 212-712-6000 FAX: 212-712-6100

ARCHITECT OF RECORD:
AAI ARCHITECTS, P.C.
14 Wall Street, 2nd Floor
New York, NY 10005
TEL: 212-964-4040 FAX: 212-964-4090

INTERIOR DESIGNER:
MEYER DAVIS
180 Varick St, suite 404
New York, NY 10014
TEL: 212-627-5574

LANDSCAPE DESIGNER:
WEST 8 URBAN DESIGN & LANDSCAPE ARCHITECTURE P.C.
333 Hudson Street, Suite 905
New York, NY 10013
TEL: 212-285-0088 FAX: 212-285-0228

STRUCTURAL ENGINEERS:
WSP
228 East 45th Street
New York, NY 10017
TEL: 212-687-9888 FAX: 646-487-5501

MEP ENGINEERS:
ICOR ASSOCIATES, LLC
485 C Route 1 South, Suite 200
Iseline, NJ 08830
TEL: 908-272-3300 FAX: 908-272-4440

GEOTECHNICAL ENGINEERS:
LANGAN ENGINEERING & ENVIRONMENTAL SERVICES
21 Penn Plaza - 360 West 31st Street, 8th Floor
New York, NY 10001
TEL: 212.479.5400 FAX: 212.479.5444

No.	DESCRIPTION:	DATE:
	ISSUE FOR CONSTRUCTION	03-18-16
1	ASI #67	06-17-16
2	ASI #71	07-29-16
3	ASI #73	08-19-16
4	ASI #76	10-28-16
5	ASI #82	01-16-17
6	ASI #86	03-17-17
	ISSUED FOR FILING	05-22-17

Discrepancies must be reported immediately to the Architect before proceeding. Only figured dimensions are to be used. Contractors must check all dimensions on site. This drawing is protected by copyright.

ALL DIMENSIONS ARE SHOWN IN IMPERIAL.

CONSULTANT:
WSP

PROJECT:
252 SOUTH STREET
NEW YORK, NY

DRAWING TITLE:
50TH FLOOR GENERAL ARRANGEMENT PLAN - PART 1

SEAL & SIGNATURE:
STATE OF NEW YORK · AHMAD RAHIMI · No. 065057 · LICENSED PROFESSIONAL ENGINEER

DATE:	08/07/15
PROJECT No:	1302510
DRAWN: CAD	REV:
CHK: CL	
SCALE: As indicated	
DWG No:	S-508.00
DOB PAGE No:	of

DOB EMPLOYEE STAMP:
Tina Mathew, RA
Building Code
APPROVED
Under Directive 2 of 1975
AMENDED APPLICATION
Date: 10/23/2017
NYC Development Hub

DOB B-SCAN:

FILE NAME:
PLOT DATE:

DEPT OF BLDGS121805639 Job Number
E305895F162 Scan Code

30" x 42" Arch E1 SHEET SIZE

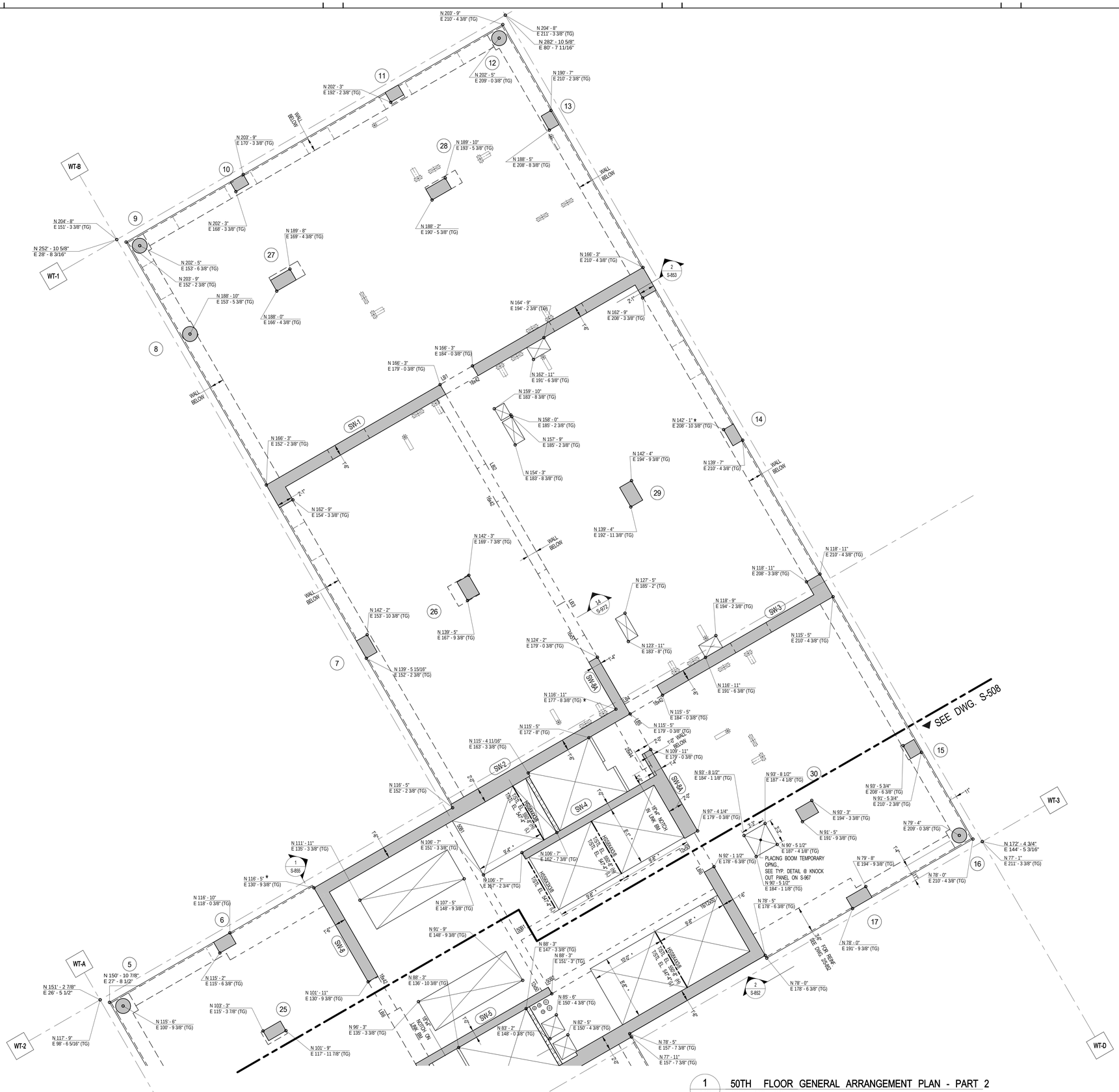
N 203' - 9" E 210' - 4 3/8" (TG)
N 204' - 8" E 211" - 3 3/8" (TG)
N 282' - 10 5/8" E 80' - 7 11/16"
N 202' - 5" E 209' - 0 3/8" (TG)
N 190' - 7" E 210' - 2 3/8" (TG)
N 202' - 3" E 192' - 2 3/8" (TG)
N 203' - 9" E 170' - 3 3/8" (TG)
N 189' - 10" E 193' - 5 3/8" (TG)
N 188' - 5" E 206' - 8 3/8" (TG)
N 188' - 2" E 190' - 5 3/8" (TG)
N 204' - 8" E 151' - 3 3/8" (TG)
N 252' - 10 5/8" E 28' - 8 3/16"
N 202' - 3" E 168' - 3 3/8" (TG)
N 189' - 8" E 169' - 4 3/8" (TG)
N 202' - 5" E 153' - 6 3/8" (TG)
N 203' - 9" E 152' - 2 3/8" (TG)
N 188' - 10" E 153' - 5 3/8" (TG)
N 188' - 0" E 166' - 4 3/8" (TG)
N 166' - 3" E 210' - 4 3/8" (TG)
N 164' - 9" E 194' - 2 3/8" (TG)
N 162' - 9" E 208' - 3 3/8" (TG)
N 166' - 3" E 184' - 0 3/8" (TG)
N 166' - 3" E 179' - 0 3/8" (TG)
N 162' - 11" E 191' - 6 3/8" (TG)
N 159' - 10" E 183' - 8 3/8" (TG)
N 158' - 0" E 185' - 2 3/8" (TG)
N 157' - 9" E 189' - 2 3/8" (TG)
N 154' - 3" E 183' - 8 3/8" (TG)
N 166' - 3" E 152' - 2 3/8" (TG)
N 162' - 9" E 154' - 3 3/8" (TG)
N 142' - 1" E 208' - 10 3/8" (TG)
N 139' - 7" E 210' - 4 3/8" (TG)
N 142' - 4" E 194' - 9 3/8" (TG)
N 139' - 4" E 192' - 11 3/8" (TG)
N 142' - 3" E 169' - 7 3/8" (TG)
N 142' - 2" E 153' - 10 3/8" (TG)
N 139' - 5" E 167' - 9 3/8" (TG)
N 139' - 5 15/16" E 152' - 2 3/8" (TG)
N 127' - 5" E 185' - 2" (TG)
N 124' - 2" E 179' - 0 3/8" (TG)
N 123' - 11" E 183' - 8" (TG)
N 118' - 11" E 210' - 4 3/8" (TG)
N 118' - 11" E 208' - 3 3/8" (TG)
N 118' - 9" E 194' - 2 3/8" (TG)
N 115' - 6" E 210' - 4 3/8" (TG)
N 116' - 11" E 177' - 8 3/8" (TG)
N 116' - 11" E 191' - 6 3/8" (TG)
N 115' - 5" E 184' - 0 3/8" (TG)
N 115' - 5" E 172' - 8" (TG)
N 115' - 5" E 179' - 0 3/8" (TG)
N 115' - 4 11/16" E 163' - 3 3/8" (TG)
N 109' - 11" E 179' - 0 3/8" (TG)
N 116' - 5" E 152' - 2 3/8" (TG)
N 93' - 8 1/2" E 184' - 1 1/8" (TG)
N 93' - 8 1/2" E 187' - 4 1/8" (TG)
N 93' - 5 3/4" E 208' - 6 3/8" (TG)
N 91' - 5 3/4" E 210' - 2 3/8" (TG)
N 93' - 3" E 194' - 3 3/8" (TG)
N 91' - 5" E 191' - 9 3/8" (TG)
N 97' - 4 1/4" E 179' - 0 3/8" (TG)
N 90' - 5 1/2" E 187' - 4 1/8" (TG)
N 92' - 1 1/2" E 178' - 6 3/8" (TG)
PLACING BOOM TEMPORARY OPNG., SEE TYP. DETAIL @ KNOCK OUT PANEL ON S-967
N 90' - 5 1/2" E 184' - 1 1/8" (TG)
N 79' - 4" E 209' - 0 3/8" (TG)
N 172' - 4 3/4" E 144' - 5 3/16"
N 77' - 1" E 211' - 3 3/8" (TG)
N 79' - 8" E 194' - 9 3/8" (TG)
N 78' - 0" E 210' - 4 3/8" (TG)
N 111' - 11" E 135' - 3 3/8" (TG)
N 116' - 5" E 130' - 9 3/8" (TG)
N 106' - 7" E 151' - 3 3/8" (TG)
N 106' - 7" E 162' - 7 3/8" (TG)
N 106' - 7" E 167' - 2 3/4" (TG)
N 107' - 5" E 148' - 9 3/8" (TG)
N 116' - 10" E 118' - 0 3/8" (TG)
N 91' - 9" E 148' - 9 3/8" (TG)
N 78' - 5" E 176' - 6 3/8" (TG)
N 78' - 0" E 191' - 9 3/8" (TG)
N 88' - 3" E 147' - 3 3/8" (TG)
N 88' - 3" E 151' - 3" (TG)
N 88' - 3" E 136' - 10 3/8" (TG)
N 85' - 6" E 150' - 4 3/8" (TG)
N 82' - 5" E 150' - 4 3/8" (TG)
N 83' - 2" E 148' - 0 3/8" (TG)
N 78' - 5" E 157' - 7 3/8" (TG)
N 77' - 11" E 157' - 7 3/8" (TG)
N 78' - 0" E 178' - 6 3/8" (TG)
N 151' - 2 7/8" E 26' - 5 1/2"
N 150' - 10 7/8" E 27' - 8 1/2"
N 117' - 9" E 98' - 6 5/16" (TG)
N 115' - 2" E 115' - 6 3/8" (TG)
N 115' - 6" E 100' - 9 3/8" (TG)
N 103' - 3" E 115' - 3 7/8" (TG)
N 101' - 11" E 130' - 9 3/8" (TG)
N 101' - 9" E 117' - 11 7/8" (TG)
N 96' - 3" E 135' - 3 3/8" (TG)
N 116' - 11" E 130' - 9 3/8" (TG)
WT-A
WT-B
WT-1
WT-2
WT-3
WT-D
SW-1
SW-2
SW-3
SW-4
SW-4A
SW-4B
SW-5
SW-6
WALL BELOW
LB1
LB2
LB3
LB4
LB5
LB6
LB7
LB8
SEE DWG. S-508
SEE DWG. S-508A
SEE DWG. S-508B
SEE DWG. S-508C
SEE DWG. S-508D
SEE DWG. S-508E
SEE DWG. S-508F
SEE DWG. S-508G
SEE DWG. S-508H
SEE DWG. S-508I
SEE DWG. S-508J
SEE DWG. S-508K
SEE DWG. S-508L
SEE DWG. S-508M
SEE DWG. S-508N
SEE DWG. S-508O
SEE DWG. S-508P
SEE DWG. S-508Q
SEE DWG. S-508R
SEE DWG. S-508S
SEE DWG. S-508T
SEE DWG. S-508U
SEE DWG. S-508V
SEE DWG. S-508W
SEE DWG. S-508X
SEE DWG. S-508Y
SEE DWG. S-508Z
SEE DWG. S-508AA
SEE DWG. S-508AB
SEE DWG. S-508AC
SEE DWG. S-508AD
SEE DWG. S-508AE
SEE DWG. S-508AF
SEE DWG. S-508AG
SEE DWG. S-508AH
SEE DWG. S-508AI
SEE DWG. S-508AJ
SEE DWG. S-508AK
SEE DWG. S-508AL
SEE DWG. S-508AM
SEE DWG. S-508AN
SEE DWG. S-508AO
SEE DWG. S-508AP
SEE DWG. S-508AQ
SEE DWG. S-508AR
SEE DWG. S-508AS
SEE DWG. S-508AT
SEE DWG. S-508AU
SEE DWG. S-508AV
SEE DWG. S-508AW
SEE DWG. S-508AX
SEE DWG. S-508AY
SEE DWG. S-508AZ
SEE DWG. S-508BA
SEE DWG. S-508BB
SEE DWG. S-508BC
SEE DWG. S-508BD
SEE DWG. S-508BE
SEE DWG. S-508BF
SEE DWG. S-508BG
SEE DWG. S-508BH
SEE DWG. S-508BI
SEE DWG. S-508BJ
SEE DWG. S-508BK
SEE DWG. S-508BL
SEE DWG. S-508BM
SEE DWG. S-508BN
SEE DWG. S-508BO
SEE DWG. S-508BP
SEE DWG. S-508BQ
SEE DWG. S-508BR
SEE DWG. S-508BS
SEE DWG. S-508BT
SEE DWG. S-508BU
SEE DWG. S-508BV
SEE DWG. S-508BW
SEE DWG. S-508BX
SEE DWG. S-508BY
SEE DWG. S-508BZ
SEE DWG. S-508CA
SEE DWG. S-508CB
SEE DWG. S-508CC
SEE DWG. S-508CD
SEE DWG. S-508CE
SEE DWG. S-508CF
SEE DWG. S-508CG
SEE DWG. S-508CH
SEE DWG. S-508CI
SEE DWG. S-508CJ
SEE DWG. S-508CK
SEE DWG. S-508CL
SEE DWG. S-508CM
SEE DWG. S-508CN
SEE DWG. S-508CO
SEE DWG. S-508CP
SEE DWG. S-508CQ
SEE DWG. S-508CR
SEE DWG. S-508CS
SEE DWG. S-508CT
SEE DWG. S-508CU
SEE DWG. S-508CV
SEE DWG. S-508CW
SEE DWG. S-508CX
SEE DWG. S-508CY
SEE DWG. S-508CZ
SEE DWG. S-508DA
SEE DWG. S-508DB
SEE DWG. S-508DC
SEE DWG. S-508DD
SEE DWG. S-508DE
SEE DWG. S-508DF
SEE DWG. S-508DG
SEE DWG. S-508DH
SEE DWG. S-508DI
SEE DWG. S-508DJ
SEE DWG. S-508DK
SEE DWG. S-508DL
SEE DWG. S-508DM
SEE DWG. S-508DN
SEE DWG. S-508DO
SEE DWG. S-508DP
SEE DWG. S-508DQ
SEE DWG. S-508DR
SEE DWG. S-508DS
SEE DWG. S-508DT
SEE DWG. S-508DU
SEE DWG. S-508DV
SEE DWG. S-508DW
SEE DWG. S-508DX
SEE DWG. S-508DY
SEE DWG. S-508DZ
SEE DWG. S-508EA
SEE DWG. S-508EB
SEE DWG. S-508EC
SEE DWG. S-508ED
SEE DWG. S-508EE
SEE DWG. S-508EF
SEE DWG. S-508EG
SEE DWG. S-508EH
SEE DWG. S-508EI
SEE DWG. S-508EJ
SEE DWG. S-508EK
SEE DWG. S-508EL
SEE DWG. S-508EM
SEE DWG. S-508EN
SEE DWG. S-508EO
SEE DWG. S-508EP
SEE DWG. S-508EQ
SEE DWG. S-508ER
SEE DWG. S-508ES
SEE DWG. S-508ET
SEE DWG. S-508EU
SEE DWG. S-508EV
SEE DWG. S-508EW
SEE DWG. S-508EX
SEE DWG. S-508EY
SEE DWG. S-508EZ
SEE DWG. S-508FA
SEE DWG. S-508FB
SEE DWG. S-508FC
SEE DWG. S-508FD
SEE DWG. S-508FE
SEE DWG. S-508FF
SEE DWG. S-508FG
SEE DWG. S-508FH
SEE DWG. S-508FI
SEE DWG. S-508FJ
SEE DWG. S-508FK
SEE DWG. S-508FL
SEE DWG. S-508FM
SEE DWG. S-508FN
SEE DWG. S-508FO
SEE DWG. S-508FP
SEE DWG. S-508FQ
SEE DWG. S-508FR
SEE DWG. S-508FS
SEE DWG. S-508FT
SEE DWG. S-508FU
SEE DWG. S-508FV
SEE DWG. S-508FW
SEE DWG. S-508FX
SEE DWG. S-508FY
SEE DWG. S-508FZ
SEE DWG. S-508GA
SEE DWG. S-508GB
SEE DWG. S-508GC
SEE DWG. S-508GD
SEE DWG. S-508GE
SEE DWG. S-508GF
SEE DWG. S-508GG
SEE DWG. S-508GH
SEE DWG. S-508GI
SEE DWG. S-508GJ
SEE DWG. S-508GK
SEE DWG. S-508GL
SEE DWG. S-508GM
SEE DWG. S-508GN
SEE DWG. S-508GO
SEE DWG. S-508GP
SEE DWG. S-508GQ
SEE DWG. S-508GR
SEE DWG. S-508GS
SEE DWG. S-508GT
SEE DWG. S-508GU
SEE DWG. S-508GV
SEE DWG. S-508GW
SEE DWG. S-508GX
SEE DWG. S-508GY
SEE DWG. S-508GZ
SEE DWG. S-508HA
SEE DWG. S-508HB
SEE DWG. S-508HC
SEE DWG. S-508HD
SEE DWG. S-508HE
SEE DWG. S-508HF
SEE DWG. S-508HG
SEE DWG. S-508HH
SEE DWG. S-508HI
SEE DWG. S-508HJ
SEE DWG. S-508HK
SEE DWG. S-508HL
SEE DWG. S-508HM
SEE DWG. S-508HN
SEE DWG. S-508HO
SEE DWG. S-508HP
SEE DWG. S-508HQ
SEE DWG. S-508HR
SEE DWG. S-508HS
SEE DWG. S-508HT
SEE DWG. S-508HU
SEE DWG. S-508HV
SEE DWG. S-508HW
SEE DWG. S-508HX
SEE DWG. S-508HY
SEE DWG. S-508HZ
SEE DWG. S-508IA
SEE DWG. S-508IB
SEE DWG. S-508IC
SEE DWG. S-508ID
SEE DWG. S-508IE
SEE DWG. S-508IF
SEE DWG. S-508IG
SEE DWG. S-508IH
SEE DWG. S-508II
SEE DWG. S-508IJ
SEE DWG. S-508IK
SEE DWG. S-508IL
SEE DWG. S-508IM
SEE DWG. S-508IN
SEE DWG. S-508IO
SEE DWG. S-508IP
SEE DWG. S-508IQ
SEE DWG. S-508IR
SEE DWG. S-508IS
SEE DWG. S-508IT
SEE DWG. S-508IU
SEE DWG. S-508IV
SEE DWG. S-508IW
SEE DWG. S-508IX
SEE DWG. S-508IY
SEE DWG. S-508IZ
SEE DWG. S-508JA
SEE DWG. S-508JB
SEE DWG. S-508JC
SEE DWG. S-508JD
SEE DWG. S-508JE
SEE DWG. S-508JF
SEE DWG. S-508JG
SEE DWG. S-508JH
SEE DWG. S-508JI
SEE DWG. S-508JJ
SEE DWG. S-508JK
SEE DWG. S-508JL
SEE DWG. S-508JM
SEE DWG. S-508JN
SEE DWG. S-508JO
SEE DWG. S-508JP
SEE DWG. S-508JQ
SEE DWG. S-508JR
SEE DWG. S-508JS
SEE DWG. S-508JT
SEE DWG. S-508JU
SEE DWG. S-508JV
SEE DWG. S-508JW
SEE DWG. S-508JX
SEE DWG. S-508JY
SEE DWG. S-508JZ
SEE DWG. S-508KA
SEE DWG. S-508KB
SEE DWG. S-508KC
SEE DWG. S-508KD
SEE DWG. S-508KE
SEE DWG. S-508KF
SEE DWG. S-508KG
SEE DWG. S-508KH
SEE DWG. S-508KI
SEE DWG. S-508KJ
SEE DWG. S-508KK
SEE DWG. S-508KL
SEE DWG. S-508KM
SEE DWG. S-508KN
SEE DWG. S-508KO
SEE DWG. S-508KP
SEE DWG. S-508KQ
SEE DWG. S-508KR
SEE DWG. S-508KS
SEE DWG. S-508KT
SEE DWG. S-508KU
SEE DWG. S-508KV
SEE DWG. S-508KW
SEE DWG. S-508KX
SEE DWG. S-508KY
SEE DWG. S-508KZ
SEE DWG. S-508LA
SEE DWG. S-508LB
SEE DWG. S-508LC
SEE DWG. S-508LD
SEE DWG. S-508LE
SEE DWG. S-508LF
SEE DWG. S-508LG
SEE DWG. S-508LH
SEE DWG. S-508LI
SEE DWG. S-508LJ
SEE DWG. S-508LK
SEE DWG. S-508LL
SEE DWG. S-508LM
SEE DWG. S-508LN
SEE DWG. S-508LO
SEE DWG. S-508LP
SEE DWG. S-508LQ
SEE DWG. S-508LR
SEE DWG. S-508LS
SEE DWG. S-508LT
SEE DWG. S-508LU
SEE DWG. S-508LV
SEE DWG. S-508LW
SEE DWG. S-508LX
SEE DWG. S-508LY
SEE DWG. S-508LZ
SEE DWG. S-508MA
SEE DWG. S-508MB
SEE DWG. S-508MC
SEE DWG. S-508MD
SEE DWG. S-508ME
SEE DWG. S-508MF
SEE DWG. S-508MG
SEE DWG. S-508MH
SEE DWG. S-508MI
SEE DWG. S-508MJ
SEE DWG. S-508MK
SEE DWG. S-508ML
SEE DWG. S-508MM
SEE DWG. S-508MN
SEE DWG. S-508MO
SEE DWG. S-508MP
SEE DWG. S-508MQ
SEE DWG. S-508MR
SEE DWG. S-508MS
SEE DWG. S-508MT
SEE DWG. S-508MU
SEE DWG. S-508MV
SEE DWG. S-508MW
SEE DWG. S-508MX
SEE DWG. S-508MY
SEE DWG. S-508MZ
SEE DWG. S-508NA
SEE DWG. S-508NB
SEE DWG. S-508NC
SEE DWG. S-508ND
SEE DWG. S-508NE
SEE DWG. S-508NF
SEE DWG. S-508NG
SEE DWG. S-508NH
SEE DWG. S-508NI
SEE DWG. S-508NJ
SEE DWG. S-508NK
SEE DWG. S-508NL
SEE DWG. S-508NM
SEE DWG. S-508NN
SEE DWG. S-508NO
SEE DWG. S-508NP
SEE DWG. S-508NQ
SEE DWG. S-508NR
SEE DWG. S-508NS
SEE DWG. S-508NT
SEE DWG. S-508NU
SEE DWG. S-508NV
SEE DWG. S-508NW
SEE DWG. S-508NX
SEE DWG. S-508NY
SEE DWG. S-508NZ
SEE DWG. S-508OA
SEE DWG. S-508OB
SEE DWG. S-508OC
SEE DWG. S-508OD
SEE DWG. S-508OE
SEE DWG. S-508OF
SEE DWG. S-508OG
SEE DWG. S-508OH
SEE DWG. S-508OI
SEE DWG. S-508OJ
SEE DWG. S-508OK
SEE DWG. S-508OL
SEE DWG. S-508OM
SEE DWG. S-508ON
SEE DWG. S-508OO
SEE DWG. S-508OP
SEE DWG. S-508OQ
SEE DWG. S-508OR
SEE DWG. S-508OS
SEE DWG. S-508OT
SEE DWG. S-508OU
SEE DWG. S-508OV
SEE DWG. S-508OW
SEE DWG. S-508OX
SEE DWG. S-508OY
SEE DWG. S-508OZ
SEE DWG. S-508PA
SEE DWG. S-508PB
SEE DWG. S-508PC
SEE DWG. S-508PD
SEE DWG. S-508PE
SEE DWG. S-508PF
SEE DWG. S-508PG
SEE DWG. S-508PH
SEE DWG. S-508PI
SEE DWG. S-508PJ
SEE DWG. S-508PK
SEE DWG. S-508PL
SEE DWG. S-508PM
SEE DWG. S-508PN
SEE DWG. S-508PO
SEE DWG. S-508PP
SEE DWG. S-508PQ
SEE DWG. S-508PR
SEE DWG. S-508PS
SEE DWG. S-508PT
SEE DWG. S-508PU
SEE DWG. S-508PV
SEE DWG. S-508PW
SEE DWG. S-508PX
SEE DWG. S-508PY
SEE DWG. S-508PZ
SEE DWG. S-508QA
SEE DWG. S-508QB
SEE DWG. S-508QC
SEE DWG. S-508QD
SEE DWG. S-508QE
SEE DWG. S-508QF
SEE DWG. S-508QG
SEE DWG. S-508QH
SEE DWG. S-508QI
SEE DWG. S-508QJ
SEE DWG. S-508QK
SEE DWG. S-508QL
SEE DWG. S-508QM
SEE DWG. S-508QN
SEE DWG. S-508QO
SEE DWG. S-508QP
SEE DWG. S-508QQ
SEE DWG. S-508QR
SEE DWG. S-508QS
SEE DWG. S-508QT
SEE DWG. S-508QU
SEE DWG. S-508QV
SEE DWG. S-508QW
SEE DWG. S-508QX
SEE DWG. S-508QY
SEE DWG. S-508QZ
SEE DWG. S-508RA
SEE DWG. S-508RB
SEE DWG. S-508RC
SEE DWG. S-508RD
SEE DWG. S-508RE
SEE DWG. S-508RF
SEE DWG. S-508RG
SEE DWG. S-508RH
SEE DWG. S-508RI
SEE DWG. S-508RJ
SEE DWG. S-508RK
SEE DWG. S-508RL
SEE DWG. S-508RM
SEE DWG. S-508RN
SEE DWG. S-508RO
SEE DWG. S-508RP
SEE DWG. S-508RQ
SEE DWG. S-508RR
SEE DWG. S-508RS
SEE DWG. S-508RT
SEE DWG. S-508RU
SEE DWG. S-508RV
SEE DWG. S-508RW
SEE DWG. S-508RX
SEE DWG. S-508RY
SEE DWG. S-508RZ
SEE DWG. S-508SA
SEE DWG. S-508SB
SEE DWG. S-508SC
SEE DWG. S-508SD
SEE DWG. S-508SE
SEE DWG. S-508SF
SEE DWG. S-508SG
SEE DWG. S-508SH
SEE DWG. S-508SI
SEE DWG. S-508SJ
SEE DWG. S-508SK
SEE DWG. S-508SL
SEE DWG. S-508SM
SEE DWG. S-508SN
SEE DWG. S-508SO
SEE DWG. S-508SP
SEE DWG. S-508SQ
SEE DWG. S-508SR
SEE DWG. S-508SS
SEE DWG. S-508ST
SEE DWG. S-508SU
SEE DWG. S-508SV
SEE DWG. S-508SW
SEE DWG. S-508SX
SEE DWG. S-508SY
SEE DWG. S-508SZ
SEE DWG. S-508TA
SEE DWG. S-508TB
SEE DWG. S-508TC
SEE DWG. S-508TD
SEE DWG. S-508TE
SEE DWG. S-508TF
SEE DWG. S-508TG
SEE DWG. S-508TH
SEE DWG. S-508TI
SEE DWG. S-508TJ
SEE DWG. S-508TK
SEE DWG. S-508TL
SEE DWG. S-508TM
SEE DWG. S-508TN
SEE DWG. S-508TO
SEE DWG. S-508TP
SEE DWG. S-508TQ
SEE DWG. S-508TR
SEE DWG. S-508TS
SEE DWG. S-508TT
SEE DWG. S-508TU
SEE DWG. S-508TV
SEE DWG. S-508TW
SEE DWG. S-508TX
SEE DWG. S-508TY
SEE DWG. S-508TZ
SEE DWG. S-508UA
SEE DWG. S-508UB
SEE DWG. S-508UC
SEE DWG. S-508UD
SEE DWG. S-508UE
SEE DWG. S-508UF
SEE DWG. S-508UG
SEE DWG. S-508UH
SEE DWG. S-508UI
SEE DWG. S-508UJ
SEE DWG. S-508UK
SEE DWG. S-508UL
SEE DWG. S-508UM
SEE DWG. S-508UN
SEE DWG. S-508UO
SEE DWG. S-508UP
SEE DWG. S-508UQ
SEE DWG. S-508UR
SEE DWG. S-508US
SEE DWG. S-508UT
SEE DWG. S-508UU
SEE DWG. S-508UV
SEE DWG. S-508UW
SEE DWG. S-508UX
SEE DWG. S-508UY
SEE DWG. S-508UZ
SEE DWG. S-508VA
SEE DWG. S-508VB
SEE DWG. S-508VC
SEE DWG. S-508VD
SEE DWG. S-508VE
SEE DWG. S-508VF
SEE DWG. S-508VG
SEE DWG. S-508VH
SEE DWG. S-508VI
SEE DWG. S-508VJ
SEE DWG. S-508VK
SEE DWG. S-508VL
SEE DWG. S-508VM
SEE DWG. S-508VN
SEE DWG. S-508VO
SEE DWG. S-508VP
SEE DWG. S-508VQ
SEE DWG. S-508VR
SEE DWG. S-508VS
SEE DWG. S-508VT
SEE DWG. S-508VU
SEE DWG. S-508VV
SEE DWG. S-508VW
SEE DWG. S-508VX
SEE DWG. S-508VY
SEE DWG. S-508VZ
SEE DWG. S-508WA
SEE DWG. S-508WB
SEE DWG. S-508WC
SEE DWG. S-508WD
SEE DWG. S-508WE
SEE DWG. S-508WF
SEE DWG. S-508WG
SEE DWG. S-508WH
SEE DWG. S-508WI
SEE DWG. S-508WJ
SEE DWG. S-508WK
SEE DWG. S-508WL
SEE DWG. S-508WM
SEE DWG. S-508WN
SEE DWG. S-508WO
SEE DWG. S-508WP
SEE DWG. S-508WQ
SEE DWG. S-508WR
SEE DWG. S-508WS
SEE DWG. S-508WT
SEE DWG. S-508WU
SEE DWG. S-508WV
SEE DWG. S-508WW
SEE DWG. S-508WX
SEE DWG. S-508WY
SEE DWG. S-508WZ
SEE DWG. S-508XA
SEE DWG. S-508XB
SEE DWG. S-508XC
SEE DWG. S-508XD
SEE DWG. S-508XE
SEE DWG. S-508XF
SEE DWG. S-508XG
SEE DWG. S-508XH
SEE DWG. S-508XI
SEE DWG. S-508XJ
SEE DWG. S-508XK
SEE DWG. S-508XL
SEE DWG. S-508XM
SEE DWG. S-508XN
SEE DWG. S-508XO
SEE DWG. S-508XP
SEE DWG. S-508XQ
SEE DWG. S-508XR
SEE DWG. S-508XS
SEE DWG. S-508XT
SEE DWG. S-508XU
SEE DWG. S-508XV
SEE DWG. S-508XW
SEE DWG. S-508XX
SEE DWG. S-508XY
SEE DWG. S-508XZ
SEE DWG. S-508YA
SEE DWG. S-508YB
SEE DWG. S-508YC
SEE DWG. S-508YD
SEE DWG. S-508YE
SEE DWG. S-508YF
SEE DWG. S-508YG
SEE DWG. S-508YH
SEE DWG. S-508YI
SEE DWG. S-508YJ
SEE DWG. S-508YK
SEE DWG. S-508YL
SEE DWG. S-508YM
SEE DWG. S-508YN
SEE DWG. S-508YO
SEE DWG. S-508YP
SEE DWG. S-508YQ
SEE DWG. S-508YR
SEE DWG. S-508YS
SEE DWG. S-508YT
SEE DWG. S-508YU
SEE DWG. S-508YV
SEE DWG. S-508YW
SEE DWG. S-508YX
SEE DWG. S-508YY
SEE DWG. S-508YZ
SEE DWG. S-508ZA
SEE DWG. S-508ZB
SEE DWG. S-508ZC
SEE DWG. S-508ZD
SEE DWG. S-508ZE
SEE DWG. S-508ZF
SEE DWG. S-508ZG
SEE DWG. S-508ZH
SEE DWG. S-508ZI
SEE DWG. S-508ZJ
SEE DWG. S-508ZK
SEE DWG. S-508ZL
SEE DWG. S-508ZM
SEE DWG. S-508ZN
SEE DWG. S-508ZO
SEE DWG. S-508ZP
SEE DWG. S-508ZQ
SEE DWG. S-508ZR
SEE DWG. S-508ZS
SEE DWG. S-508ZT
SEE DWG. S-508ZU
SEE DWG. S-508ZV
SEE DWG. S-508ZW
SEE DWG. S-508ZX
SEE DWG. S-508ZY
SEE DWG. S-508ZZ
SEE DWG. S-508AAA
SEE DWG. S-508AAB
SEE DWG. S-508AAC
SEE DWG. S-508AAD
SEE DWG. S-508AAE
SEE DWG. S-508AAF
SEE DWG. S-508AAG
SEE DWG. S-508AAH
SEE DWG. S-508AAI
SEE DWG. S-508AAJ
SEE DWG. S-508AAK
SEE DWG. S-508AAL
SEE DWG. S-508AAM
SEE DWG. S-508AAN
SEE DWG. S-508AAO
SEE DWG. S-508AAP
SEE DWG. S-508AAQ
SEE DWG. S-508AAR
SEE DWG. S-508AAS
SEE DWG. S-508AAT
SEE DWG. S-508AAU
SEE DWG. S-508AAV
SEE DWG. S-508AAW
SEE DWG. S-508AAX
SEE DWG. S-508AAY
SEE DWG. S-508AAZ
SEE DWG. S-508ABA
SEE DWG. S-508ABB
SEE DWG. S-508ABC
SEE DWG. S-508ABD
SEE DWG. S-508ABE
SEE DWG. S-508ABF
SEE DWG. S-508ABG
SEE DWG. S-508ABH
SEE DWG. S-508ABI
SEE DWG. S-508ABJ
SEE DWG. S-508ABK
SEE DWG. S-508ABL
SEE DWG. S-508ABM
SEE DWG. S-508ABN
SEE DWG. S-508ABO
SEE DWG. S-508ABP
SEE DWG. S-508ABQ
SEE DWG. S-508ABR
SEE DWG. S-508ABS
SEE DWG. S-508ABT
SEE DWG. S-508ABU
SEE DWG. S-508ABV
SEE DWG. S-508ABW
SEE DWG. S-508ABX
SEE DWG. S-508ABY
SEE DWG. S-508ABZ
SEE DWG. S-508ACA
SEE DWG. S-508ACB
SEE DWG. S-508ACC
SEE DWG. S-508ACD
SEE DWG. S-508ACE
SEE DWG. S-508ACF
SEE DWG. S-508ACG
SEE DWG. S-508ACH
SEE DWG. S-508ACI
SEE DWG. S-508ACJ
SEE DWG. S-508ACK
SEE DWG. S-508ACL
SEE DWG. S-508ACM
SEE DWG. S-508ACN
SEE DWG. S-508ACO
SEE DWG. S-508ACP
SEE DWG. S-508ACQ
SEE DWG. S-508ACR
SEE DWG. S-508ACS
SEE DWG. S-508ACT
SEE DWG. S-508ACU
SEE DWG. S-508ACV
SEE DWG. S-508ACW
SEE DWG. S-508ACX
SEE DWG. S-508ACY
SEE DWG. S-508ACZ
SEE DWG. S-508ADA
SEE DWG. S-508ADB
SEE DWG. S-508ADC
SEE DWG. S-508ADD
SEE DWG. S-508ADE
SEE DWG. S-508ADF
SEE DWG. S-508ADG
SEE DWG. S-508ADH
SEE DWG. S-508ADI
SEE DWG. S-508ADJ
SEE DWG. S-508ADK
SEE DWG. S-508ADL
SEE DWG. S-508ADM
SEE DWG. S-508ADN
SEE DWG. S-508ADO
SEE DWG. S-508ADP
SEE DWG. S-508ADQ
SEE DWG. S-508ADR
SEE DWG. S-508ADS
SEE DWG. S-508ADT
SEE DWG. S-508ADU
SEE DWG. S-508ADV
SEE DWG. S-508ADW
SEE DWG. S-508ADX
SEE DWG. S-508ADY
SEE DWG. S-508ADZ
SEE DWG. S-508AEA
SEE DWG. S-508AEB
SEE DWG. S-508AEC
SEE DWG. S-508AED
SEE DWG. S-508AEE
SEE DWG. S-508AEF
SEE DWG. S-508AEG
SEE DWG. S-508AEH
SEE DWG. S-508AEI
SEE DWG. S-508AEJ
SEE DWG. S-508AEK
SEE DWG. S-508AEL
SEE DWG. S-508AEM
SEE DWG. S-508AEN
SEE DWG. S-508AEO
SEE DWG. S-508AEP
SEE DWG. S-508AEQ
SEE DWG. S-508AER
SEE DWG. S-508AES
SEE DWG. S-508AET
SEE DWG. S-508AEU
SEE DWG. S-508AEV
SEE DWG. S-508AEW
SEE DWG. S-508AEX
SEE DWG. S-508AEY
SEE DWG. S-508AEZ
SEE DWG. S-508AFA
SEE DWG. S-508AFB
SEE DWG. S-508AFC
SEE DWG. S-508AFD
SEE DWG. S-508AFE
SEE DWG. S-508AFF
SEE DWG. S-508AFG
SEE DWG. S-508AFH
SEE DWG. S-508AFI
SEE DWG. S-508AFJ
SEE DWG. S-508AFK
SEE DWG. S-508AFL
SEE DWG. S-508AFM
SEE DWG. S-508AFN
SEE DWG. S-508AFO
SEE DWG. S-508AFP
SEE DWG. S-508AFQ
SEE DWG. S-508AFR
SEE DWG. S-508AFS
SEE DWG. S-508AFT
SEE DWG. S-508AFU
SEE DWG. S-508AFV
SEE DWG. S-508AFW
SEE DWG. S-508AFX
SEE DWG. S-508AFY
SEE DWG. S-508AFZ
SEE DWG. S-508AGA
SEE DWG. S-508AGB
SEE DWG. S-508AGC
SEE DWG. S-508AGD
SEE DWG. S-508AGE
SEE DWG. S-508AGF
SEE DWG. S-508AGG
SEE DWG. S-508AGH
SEE DWG. S-508AGI
SEE DWG. S-508AGJ
SEE DWG. S-508AGK
SEE DWG. S-508AGL
SEE DWG. S-508AGM
SEE DWG. S-508AGN
SEE DWG. S-508AGO
SEE DWG. S-508AGP
SEE DWG. S-508AGQ
SEE DWG. S-508AGR
SEE DWG. S-508AGS
SEE DWG. S-508AGT
SEE DWG. S-508AGU
SEE DWG. S-508AGV
SEE DWG. S-508AGW
SEE DWG. S-508AGX
SEE DWG. S-508AGY
SEE DWG. S-508AGZ
SEE DWG. S-508AHA
SEE DWG. S-508AHB
SEE DWG. S-508AHC
SEE DWG. S-508AHD
SEE DWG. S-508AHE
SEE DWG. S-508AHF
SEE DWG. S-508AHG
SEE DWG. S-508AHH
SEE DWG. S-508AHI
SEE DWG. S-508AHJ
SEE DWG. S-508AHK
SEE DWG. S-508AHL
SEE DWG. S-508AHM
SEE DWG. S-508AHN
SEE DWG. S-508AHO
SEE DWG. S-508AHP
SEE DWG. S-508AHQ
SEE DWG. S-508AHR
SEE DWG. S-508AHS
SEE DWG. S-508AHT
SEE DWG. S-508AHU
SEE DWG. S-508AHV
SEE DWG. S-508AHW
SEE DWG. S-508AHX
SEE DWG. S-508AHY
SEE DWG. S-508AHZ
SEE DWG. S-508AIA
SEE DWG. S-508AIB
SEE DWG. S-508AIC
SEE DWG. S-508AID
SEE DWG. S-508AIE
SEE DWG. S-508AIF
SEE DWG. S-508AIG
SEE DWG. S-508AIH
SEE DWG. S-508AII
SEE DWG. S-508AIJ
SEE DWG. S-508AIK
SEE DWG. S-508AIL
SEE DWG. S-508AIM
SEE DWG. S-508AIN
SEE DWG. S-508AIO
SEE DWG. S-508AIP
SEE DWG. S-508AIQ
SEE DWG. S-508AIR
SEE DWG. S-508AIS
SEE DWG. S-508AIT
SEE DWG. S-508AIU
SEE DWG. S-508AIV
SEE DWG. S-508AIW
SEE DWG. S-508AIX
SEE DWG. S-508AIY
SEE DWG. S-508AIZ
SEE DWG. S-508AJA
SEE DWG. S-508AJB
SEE DWG. S-508AJC
SEE DWG. S-508AJD
SEE DWG. S-508AJE
SEE DWG. S-508AJF
SEE DWG. S-508AJG
SEE DWG. S-508AJH
SEE DWG. S-508AJI
SEE DWG. S-508AJJ
SEE DWG. S-508AJK
SEE DWG. S-508AJL
SEE DWG. S-508AJM
SEE DWG. S-508AJN
SEE DWG. S-508AJO
SEE DWG. S-508AJP
SEE DWG. S-508AJQ
SEE DWG. S-508AJR
SEE DWG. S-508AJS
SEE DWG. S-508AJT
SEE DWG. S-508AJU
SEE DWG. S-508AJV
SEE DWG. S-508AJW
SEE DWG. S-508AJX
SEE DWG. S-508AJY
SEE DWG. S-508AJZ
SEE DWG. S-508AKA
SEE DWG. S-508AKB
SEE DWG. S-508AKC
SEE DWG. S-508AKD
SEE DWG. S-508AKE
SEE DWG. S-508AKF
SEE DWG. S-508AKG
SEE DWG. S-508AKH
SEE DWG. S-508AKI
SEE DWG. S-508AKJ
SEE DWG. S-508AKK
SEE DWG. S-508AKL
SEE DWG. S-508AKM
SEE DWG. S-508AKN
SEE DWG. S-508AKO
SEE DWG. S-508AKP
SEE DWG. S-508AKQ
SEE DWG. S-508AKR
SEE DWG. S-508AKS
SEE DWG. S-508AKT
SEE DWG. S-508AKU
SEE DWG. S-508AKV
SEE DWG. S-508AKW
SEE DWG. S-508AKX
SEE DWG.

DEPT OF BLDGS121185539 Job Number
E-380518310103 Scan Code
30" x 42" Arch E1 - SHEET SIZE

1 S-510 **51ST-59TH OVERALL FRAMING PLAN**

SCALE: 3/32" = 1'-0"

51ST - 59TH FLOOR BEAM SCHEDULE

BEAM MARK	SIZE WIDTH	SIZE DEPTH	REINFORCEMENT BOTTOM CONTINUOUS	REINFORCEMENT TOP CONTINUOUS	STIRRUPS TYPE	STIRRUPS SIZE	STIRRUPS SPACING	REMARKS
51B1	12	30	2-#7	4-#9	1	#4	@8	CANTILEVER, EXTEND TOP BARS 11'-0" INTO WALL
51B2	12	24	2-#8	2-#8	1	#4	@10	
51B3	36 /34	13	6-#8	6-#8	2	#4	@5	
51B4	12	24	2-#7	2-#9	1	#4	@6	

TYPE 1 TYPE 2

STIRRUP TYPES

NOTES:

1. TOP OF SLAB ELEVATION TO BE U.O.N. ON PLAN

51ST FLOOR	560'-10"
52ND FLOOR	570'-10"
53RD FLOOR	580'-10"
54TH FLOOR	591'-11"
55TH FLOOR	601'-11"
56TH FLOOR	611'-11"
57TH FLOOR	621'-11"
58TH FLOOR	631'-11"
59TH FLOOR	641'-11"

2. SLAB TO BE 9" THICK U.O.N. THUS ▭ ON PLAN.
3. BOTTOM REINFORCEMENT TO BE: #4@12 FOR 9" SLAB
   #4@10 FOR 10" SLAB
4. FOR BALANCE OF NOTES SEE DRAWING S-010.
5. FOR STR. INTEGRITY REINF. ADDL INFORMATION SEE S-965.

KEY PLAN:

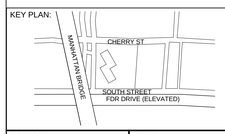

PROJECT NORTH

TRUE NORTH

DEVELOPER:
EXTELL DEVELOPMENT COMPANY
805 Third Ave, 7th Floor
New York, NY 10022
TEL: 212-712-6000 FAX: 212-712-6100

ARCHITECT OF RECORD:
AAI ARCHITECTS, P.C.
14 Wall Street, 2nd Floor
New York, NY 10005
TEL: 212-964-4040 FAX: 212-964-4090

INTERIOR DESIGNER:
MEYER DAVIS
180 Varick St, suite 404
New York, NY 10014
TEL: 212-627-5574

LANDSCAPE DESIGNER:
WEST 8 URBAN DESIGN & LANDSCAPE ARCHITECTURE P.C.
333 Hudson Street, Suite 905
New York, NY 10013
TEL: 212-285-0088 FAX: 212-285-0228

STRUCTURAL ENGINEERS:
WSP
228 East 45th Street
New York, NY 10017
TEL: 212-687-9888 FAX: 646-487-5501

MEP ENGINEERS:
ICOR ASSOCIATES, LLC
485 C Route 1 South, Suite 200
Iselin, NJ 08830
TEL: 908-272-3300 FAX: 908-272-4440

GEOTECHNICAL ENGINEERS:
LANGAN ENGINEERING & ENVIRONMENTAL SERVICES
21 Penn Plaza - 360 West 31st Street, 8th Floor
New York, NY 10001
TEL: 212.479.5400 FAX: 212.479.5444

No.	DESCRIPTION:	DATE:
	CONCRETE BID PACKAGE	03-06-15
	50% CONSTRUCTION DOCUMENTS	04-08-15
	ISSUED FOR FILING	07-28-15
	80% CONSTRUCTION DOCUMENTS	08-14-15
1	ASI #82	01-16-17
2	ASI #86	03-17-17
3	ISSUED FOR FILING	05-22-17

Discrepancies must be reported immediately to the Architect before proceeding. Only figured dimensions are to be used. Contractors must check all dimensions on site. This drawing is protected by copyright.

ALL DIMENSIONS ARE SHOWN IN IMPERIAL.

CONSULTANT: WSP

PROJECT:
252 SOUTH STREET
NEW YORK, NY

DRAWING TITLE:
51ST-59TH FLOOR OVERALL FRAMING PLAN

SEAL & SIGNATURE:

DATE:	03/03/15
PROJECT No:	1302510
DRAWN: CAD	REV:
CHK: CL	
SCALE: As indicated	
DWG No:	**S-510.02**
DOB PAGE No:	of

DOB EMPLOYEE STAMP:

Tina Mathew, RA
APPROVED
Under Directive 2 of 1975
AMENDED APPLICATION
Date: 10/23/2017
NYC Development Hub

DOB B-SCAN:

FILE NAME:
PLOT DATE:

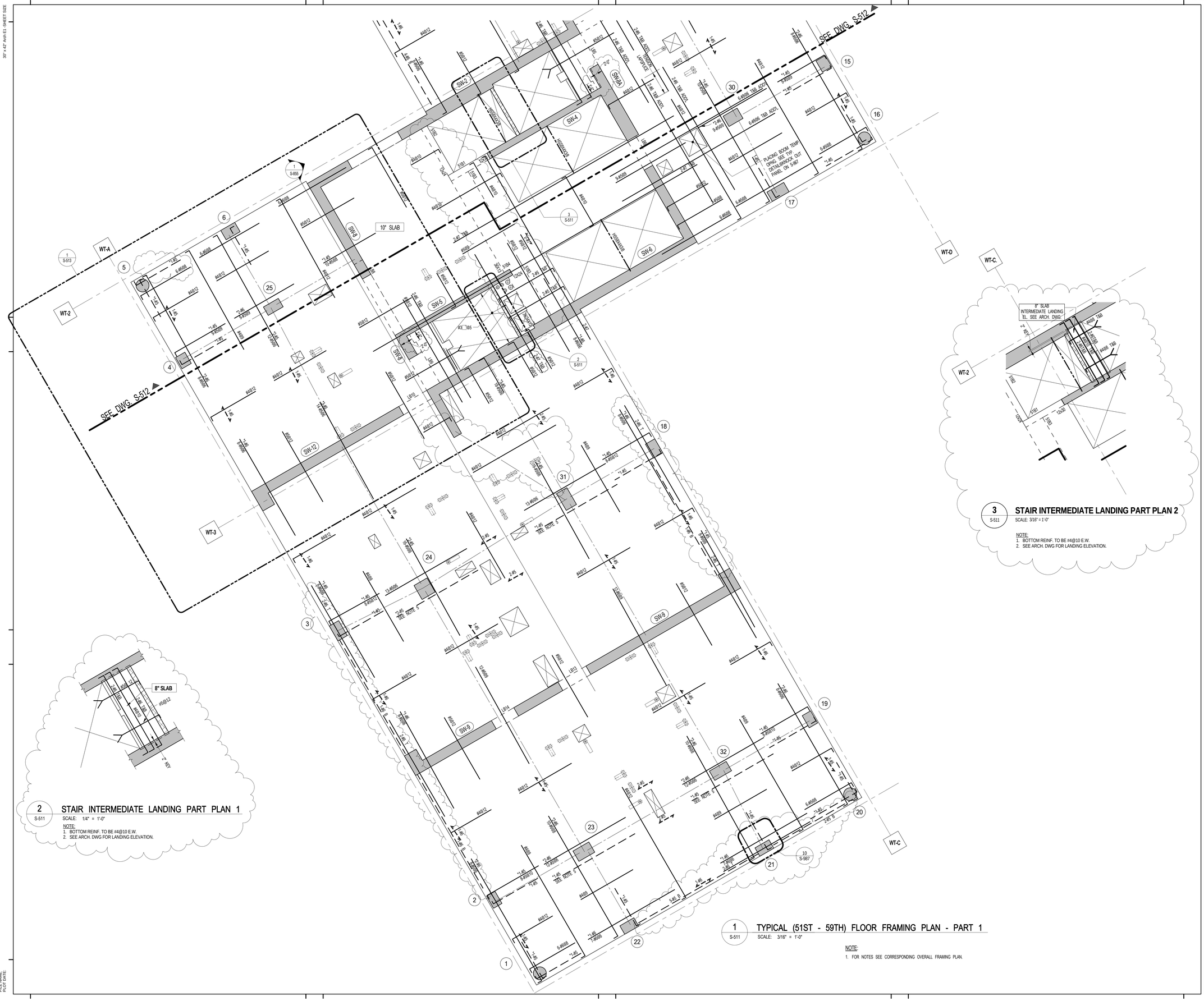

3 S-511 **STAIR INTERMEDIATE LANDING PART PLAN 2**

SCALE: 3/16" = 1'-0"

NOTE:
1. BOTTOM REINF. TO BE #4@10 E.W.
2. SEE ARCH. DWG FOR LANDING ELEVATION.

2 S-511 **STAIR INTERMEDIATE LANDING PART PLAN 1**

SCALE: 1/4" = 1'-0"

NOTE:
1. BOTTOM REINF. TO BE #4@10 E.W.
2. SEE ARCH. DWG FOR LANDING ELEVATION.

1 S-511 **TYPICAL (51ST - 59TH) FLOOR FRAMING PLAN - PART 1**

SCALE: 3/16" = 1'-0"

NOTE:
1. FOR NOTES SEE CORRESPONDING OVERALL FRAMING PLAN.

KEY PLAN:

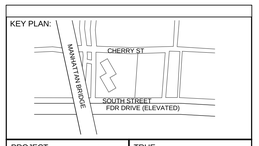

PROJECT NORTH | TRUE NORTH

DEVELOPER:
EXTELL DEVELOPMENT COMPANY
805 Third Ave, 7th Floor
New York, NY 10022
TEL: 212-712-6000 FAX: 212-712-6100

ARCHITECT OF RECORD:
AAI ARCHITECTS, P.C.
14 Wall Street, 2nd Floor
New York, NY 10005
TEL: 212-964-4040 FAX: 212-964-4090

INTERIOR DESIGNER:
MEYER DAVIS
180 Varick St, suite 404
New York, NY 10014
TEL: 212-627-5574

LANDSCAPE DESIGNER:
WEST 8 URBAN DESIGN & LANDSCAPE ARCHITECTURE P.C.
333 Hudson Street, Suite 905
New York, NY 10013
TEL: 212-285-0088 FAX: 212-285-0228

STRUCTURAL ENGINEERS:
WSP
228 East 45th Street
New York, NY 10017
TEL: 212-687-9888 FAX: 646-487-5501

MEP ENGINEERS:
ICOR ASSOCIATES, LLC
485 C Route 1 South, Suite 200
Iseline, NJ 08830
TEL: 908-272-3300 FAX: 908-272-4440

GEOTECHNICAL ENGINEERS:
LANGAN ENGINEERING & ENVIRONMENTAL SERVICES
21 Penn Plaza - 360 West 31st Street, 8th Floor
New York, NY 10001
TEL: 212.479.5400 FAX: 212.479.5444

No.	DESCRIPTION:	DATE:
	CONCRETE BID PACKAGE	03-06-15
	50% CONSTRUCTION DOCUMENTS	04-08-15
	ISSUED FOR FILING	07-28-15
	80% CONSTRUCTION DOCUMENTS	08-14-15
	ISSUE FOR CONSTRUCTION	03-18-16
1	ASI #76	10-28-16
2	ASI #82	01-16-17
3	ASI #86	03-17-17
4	ASI #87	03-31-17
5	ISSUED FOR FILING	05-22-17

Discrepancies must be reported immediately to the Architect before proceeding. Only figured dimensions are to be used. Contractors must check all dimensions on site. This drawing is protected by copyright.

ALL DIMENSIONS ARE SHOWN IN IMPERIAL.

CONSULTANT:
WSP

PROJECT:
252 SOUTH STREET
NEW YORK, NY

DRAWING TITLE:
51ST-59TH FLOOR FRAMING -PART 1

SEAL & SIGNATURE:

STATE OF NEW YORK · AHMAD RAHMIAN · No. 065557 · LICENSED PROFESSIONAL ENGINEER

DATE:	03/03/15
PROJECT No:	1302510
DRAWN: CAD	REV:
CHK: CL	
SCALE: As indicated	
DWG No:	S-511.02
DOB PAGE No:	of

DOB EMPLOYEE STAMP:
Tina Mathew, RA
APPROVED
Under Directive 2 of 1975
AMENDED APPLICATION
Date: 10/23/2017
NYC Development Hub

DOB B-SCAN:

FILE NAME:
PLOT DATE:

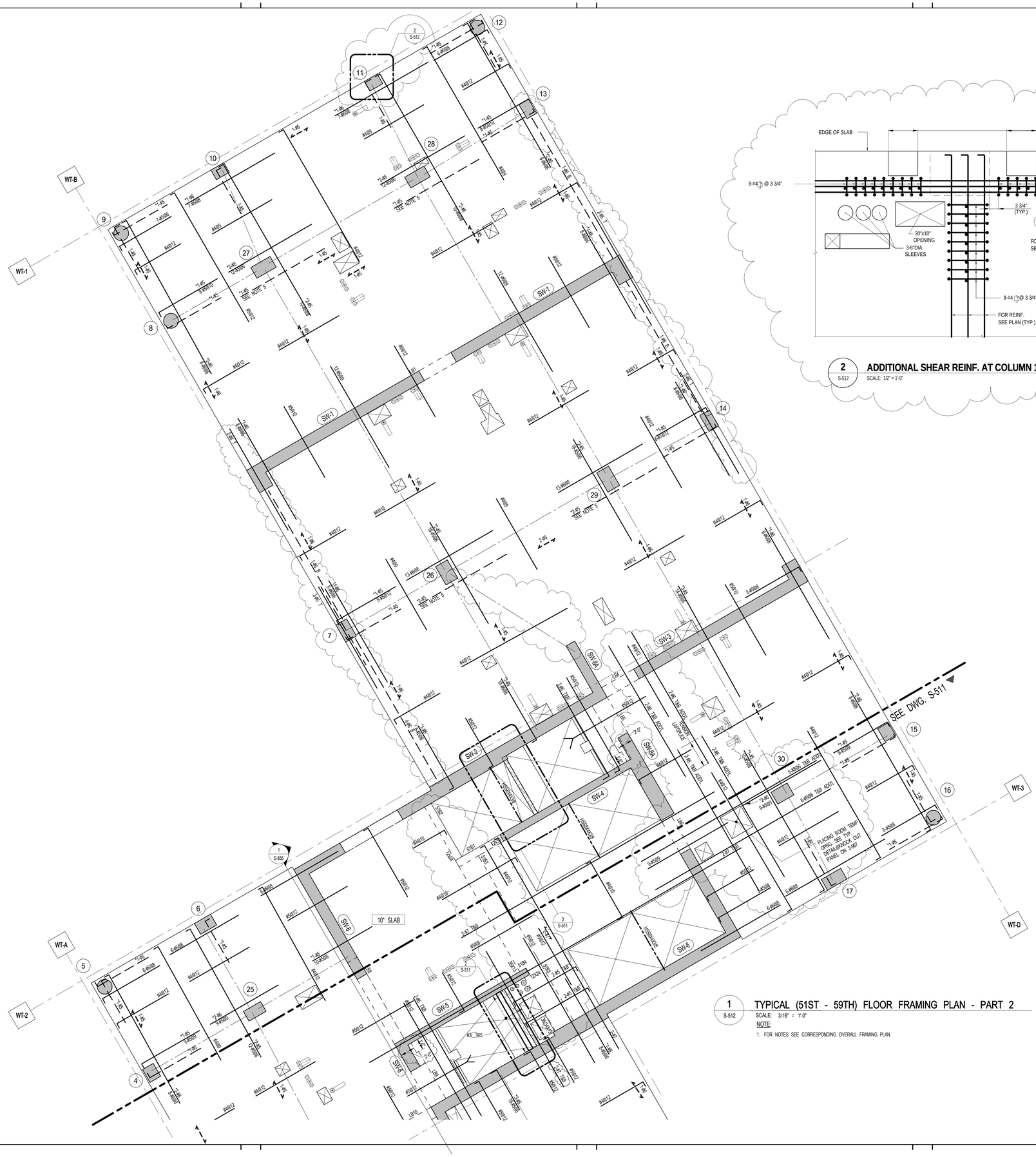

1 S-512 TYPICAL (51ST - 59TH) FLOOR FRAMING PLAN - PART 2

SCALE: 3/16" = 1'-0"

NOTE:

1. FOR NOTES SEE CORRESPONDING OVERALL FRAMING PLAN.

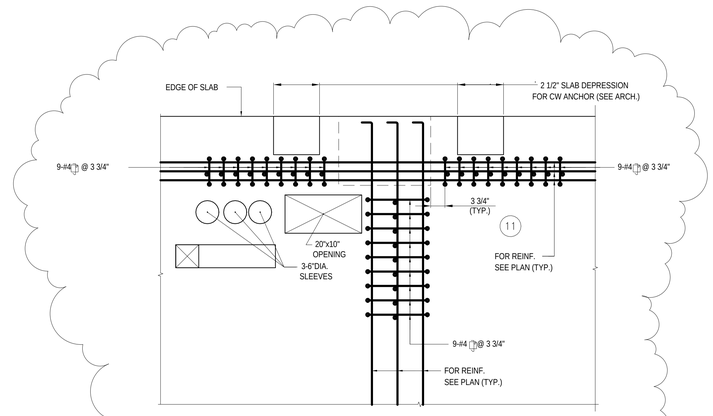

2 S-512 ADDITIONAL SHEAR REINF. AT COLUMN 11 (51ST - 57TH FL'S)

SCALE: 1/2" = 1'-0"

KEY PLAN:

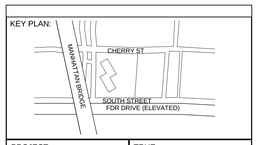

PROJECT NORTH

TRUE NORTH

DEVELOPER:
EXTELL DEVELOPMENT COMPANY
805 Third Ave, 7th Floor
New York, NY 10022
TEL: 212-712-6000 FAX: 212-712-6100

ARCHITECT OF RECORD:
AAI ARCHITECTS, P.C.
14 Wall Street, 2nd Floor
New York, NY 10005
TEL: 212-964-4040 FAX: 212-964-4090

INTERIOR DESIGNER:
MEYER DAVIS
180 Varick St, suite 404
New York, NY 10014
TEL: 212-627-5574

LANDSCAPE DESIGNER:
WEST 8 URBAN DESIGN & LANDSCAPE ARCHITECTURE P.C.
333 Hudson Street, Suite 905
New York, NY 10013
TEL: 212-285-0088 FAX: 212-285-0228

STRUCTURAL ENGINEERS:
WSP
228 East 45th Street
New York, NY 10017
TEL: 212-687-9888 FAX: 646-487-5501

MEP ENGINEERS:
ICOR ASSOCIATES, LLC
485 C Route 1 South, Suite 200
Iseline, NJ 08830
TEL: 908-272-3300 FAX: 908-272-4440

GEOTECHNICAL ENGINEERS:
LANGAN ENGINEERING & ENVIRONMENTAL SERVICES
21 Penn Plaza - 360 West 31st Street, 8th Floor
New York, NY 10001
TEL: 212.479.5400 FAX: 212.479.5444

No.	DESCRIPTION:	DATE:
	CONCRETE BID PACKAGE	03-06-15
	50% CONSTRUCTION DOCUMENTS	04-08-15
	ISSUED FOR FILING	07-28-15
	80% CONSTRUCTION DOCUMENTS	08-14-15
	ISSUE FOR CONSTRUCTION	03-18-16
1	ASI #76	10-28-16
2	ASI #82	01-16-17
3	ASI #85	03-01-17
4	ASI #86	03-17-17
5	ISSUED FOR FILING	05-22-17

Discrepancies must be reported immediately to the Architect before proceeding. Only figured dimensions are to be used. Contractors must check all dimensions on site. This drawing is protected by copyright.

ALL DIMENSIONS ARE SHOWN IN IMPERIAL.

CONSULTANT:

WSP

PROJECT:

252 SOUTH STREET
NEW YORK, NY

DRAWING TITLE:

51ST-59TH FLOOR FRAMING -PART 2

SEAL & SIGNATURE:

STATE OF NEW YORK · AHMAD RAHIMIAN · No. 065537 · LICENSED PROFESSIONAL ENGINEER

DATE:	03/03/15
PROJECT No:	1302510
DRAWN: CAD	REV:
CHK: CL	
SCALE: As indicated	
DWG No:	**S-512.02**
DOB PAGE No:	of

DOB EMPLOYEE STAMP:

Tina Mathew, RA
Building 1
APPROVED
Under Directive 2 of 1975
AMENDED APPLICATION
Date: 10/23/2017
NYC Development Hub

DOB B-SCAN:

30" x 42" Arch E1 - SHEET SIZE

FILE NAME:
PLOT DATE:

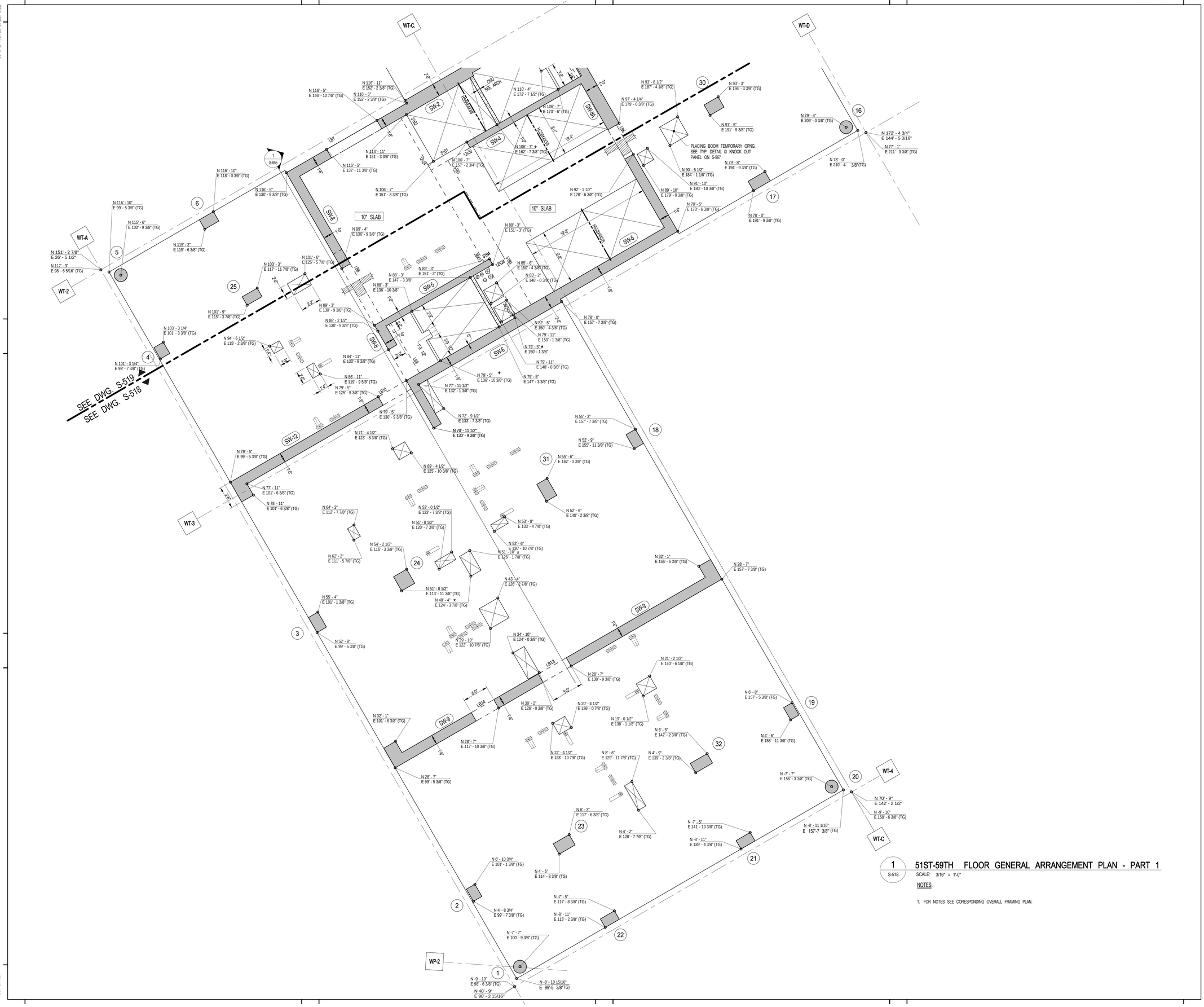

1 S-518 51ST-59TH FLOOR GENERAL ARRANGEMENT PLAN - PART 1

SCALE: 3/16" = 1'-0"

NOTES:

1. FOR NOTES SEE CORESPONDING OVERALL FRAMING PLAN.

KEY PLAN:

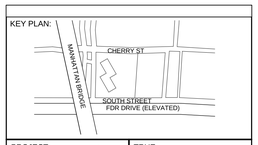

PROJECT NORTH

TRUE NORTH

DEVELOPER:
EXTELL DEVELOPMENT COMPANY
805 Third Ave, 7th Floor
New York, NY 10022
TEL: 212-712-6000 FAX: 212-712-6100

ARCHITECT OF RECORD:
AAI ARCHITECTS, P.C.
14 Wall Street, 2nd Floor
New York, NY 10005
TEL: 212-964-4040 FAX: 212-964-4090

INTERIOR DESIGNER:
MEYER DAVIS
180 Varick St, suite 404
New York, NY 10014
TEL: 212-627-5574

LANDSCAPE DESIGNER:
WEST 8 URBAN DESIGN & LANDSCAPE ARCHITECTURE P.C.
333 Hudson Street, Suite 905
New York, NY 10013
TEL: 212-285-0088 FAX: 212-285-0228

STRUCTURAL ENGINEERS:
WSP
228 East 45th Street
New York, NY 10017
TEL: 212-687-9888 FAX: 646-487-5501

MEP ENGINEERS:
ICOR ASSOCIATES, LLC
485 C Route 1 South, Suite 200
Iseline, NJ 08830
TEL: 908-272-3300 FAX: 908-272-4440

GEOTECHNICAL ENGINEERS:
LANGAN ENGINEERING & ENVIRONMENTAL SERVICES
21 Penn Plaza - 360 West 31st Street, 8th Floor
New York, NY 10001
TEL: 212.479.5400 FAX: 212.479.5444

No.	DESCRIPTION:	DATE:
	ISSUE FOR CONSTRUCTION	03-18-16
1	ASI #75	10-10-16
2	ASI #82	01-16-17
3	ASI #86	03-17-17
	ISSUED FOR FILING	05-22-17

Discrepancies must be reported immediately to the Architect before proceeding. Only figured dimensions are to be used. Contractors must check all dimensions on site. This drawing is protected by copyright.

ALL DIMENSIONS ARE SHOWN IN IMPERIAL.

CONSULTANT:
WSP

PROJECT:
252 SOUTH STREET
NEW YORK, NY

DRAWING TITLE:
51ST-59TH FLOOR GENERAL ARRANGEMENT PLAN - PART 1

SEAL & SIGNATURE:
STATE OF NEW YORK · AHMAD RAHIMIAN · No. 065537 · LICENSED PROFESSIONAL ENGINEER

DATE:	08/07/15
PROJECT No:	1302510
DRAWN: CAD	REV:
CHK: CL	
SCALE: As indicated	
DWG No:	S-518.00
DOB PAGE No:	of

DOB EMPLOYEE STAMP:
Tina Mathew, RA
APPROVED
Under Directive 2 of 1975
AMENDED APPLICATION
Date: 10/23/2017
NYC Development Hub

DOB B-SCAN:

30" x 42" Arch E1 - SHEET SIZE

FILE NAME:
PLOT DATE:

DEPT OF BLDGS121185528 Job Number
E510648530W0 Scan Code

30" x 42" Arch E1 - SHEET SIZE

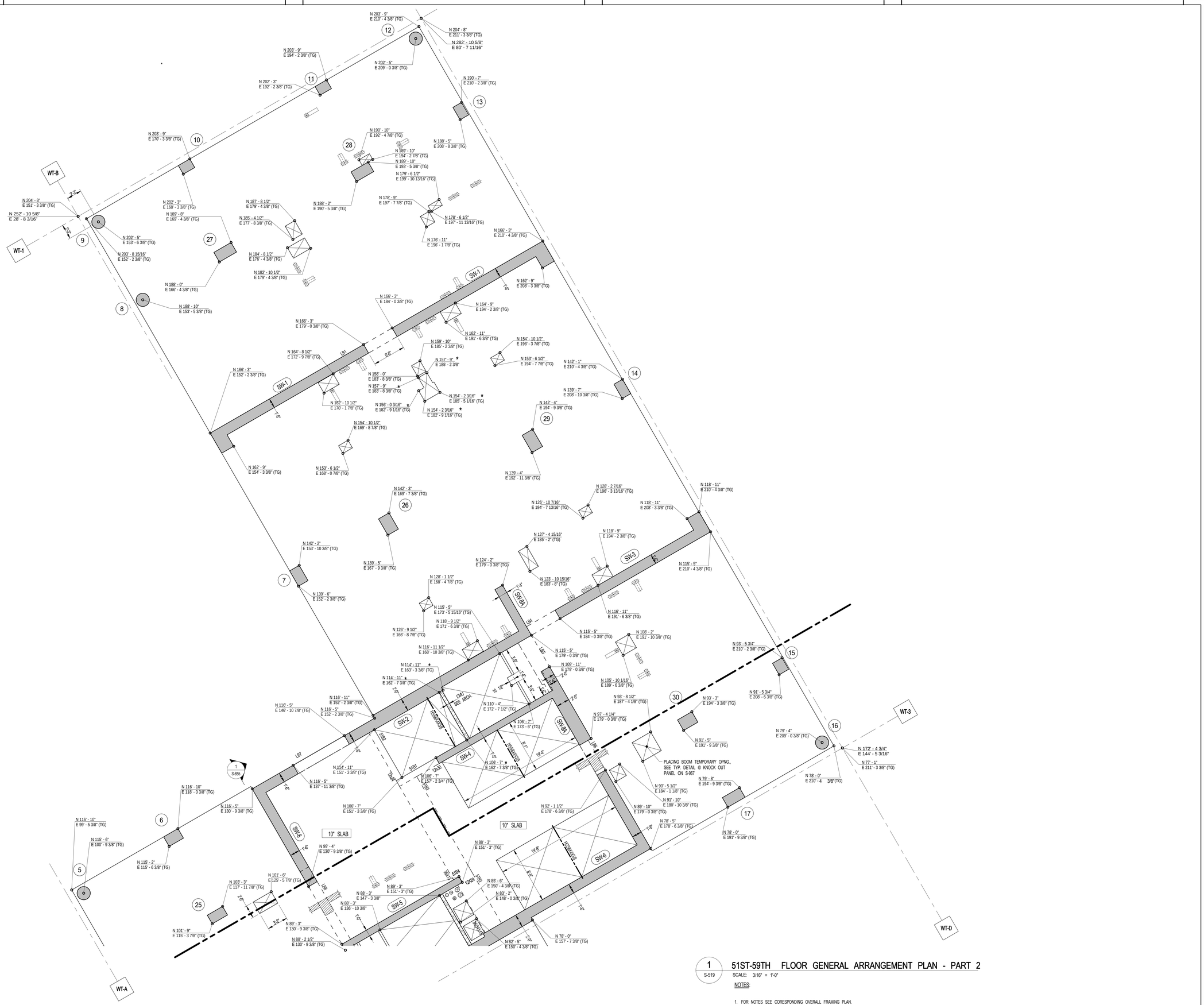

1 S-519 — 51ST-59TH FLOOR GENERAL ARRANGEMENT PLAN - PART 2

SCALE: 3/16" = 1'-0"

NOTES:

1. FOR NOTES SEE CORESPONDING OVERALL FRAMING PLAN.

FILE NAME:
PLOT DATE:

KEY PLAN:

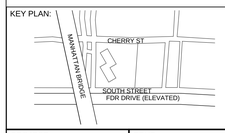

PROJECT NORTH

TRUE NORTH

DEVELOPER:
EXTELL DEVELOPMENT COMPANY
805 Third Ave, 7th Floor
New York, NY 10022
TEL: 212-712-6000 FAX: 212-712-6100

ARCHITECT OF RECORD:
AAI ARCHITECTS, P.C.
14 Wall Street, 2nd Floor
New York, NY 10005
TEL: 212-964-4040 FAX: 212-964-4090

INTERIOR DESIGNER:
MEYER DAVIS
180 Varick St, suite 404
New York, NY 10014
TEL: 212-627-5574

LANDSCAPE DESIGNER:
WEST 8 URBAN DESIGN & LANDSCAPE ARCHITECTURE P.C.
333 Hudson Street, Suite 905
New York, NY 10013
TEL: 212-285-0088 FAX: 212-285-0228

STRUCTURAL ENGINEERS:
WSP
228 East 45th Street
New York, NY 10017
TEL: 212-687-9888 FAX: 646-487-5501

MEP ENGINEERS:
ICOR ASSOCIATES, LLC
485 C Route 1 South, Suite 200
Iseline, NJ 08830
TEL: 908-272-3300 FAX: 908-272-4440

GEOTECHNICAL ENGINEERS:
LANGAN ENGINEERING & ENVIRONMENTAL SERVICES
21 Penn Plaza - 360 West 31st Street, 8th Floor
New York, NY 10001
TEL: 212.479.5400 FAX: 212.479.5444

No.	DESCRIPTION:	DATE:
	ISSUE FOR CONSTRUCTION	03-18-16
1	ASI #75	10-10-16
2	ASI #82	01-16-17
3	ASI #86	03-17-17
	ISSUED FOR FILING	05-22-17

Discrepancies must be reported immediately to the Architect before proceeding. Only figured dimensions are to be used. Contractors must check all dimensions on site. This drawing is protected by copyright.

ALL DIMENSIONS ARE SHOWN IN IMPERIAL.

CONSULTANT:
WSP

PROJECT:
252 SOUTH STREET
NEW YORK, NY

DRAWING TITLE:
51ST-59TH FLOOR GENERAL ARRANGEMENT PLAN - PART 2

SEAL & SIGNATURE:
STATE OF NEW YORK ANOAD RAMJOHN No. 065052 LICENSED PROFESSIONAL ENGINEER

DATE: 08/07/15
PROJECT No: 1302510
DRAWN: CAD REV:
CHK: CL
SCALE: As indicated
DWG No: **S-519.00**
DOB PAGE No: of

DOB EMPLOYEE STAMP:
Tina Mathew, RA
Building
APPROVED
Under Directive 2 of 1975
AMENDED APPLICATION
Date: 10/23/2017
NYC Development Hub

DOB B-SCAN:

DEPT OF BLDGS121185539 Job Number
E574189972 Scan Code
30" x 42" Arch E1 - SHEET SIZE

1 S-600 60TH-70TH FLOOR FRAMING PLAN

SCALE: 3/32" = 1'-0"

NOTES:

1. TOP OF SLAB ELEVATION TO BE PLAN

60TH FLOOR	652'-2"	U.O.N. ON
61ST FLOOR	662'-5"	
62ND FLOOR	672'-8"	
63RD FLOOR	684'-0"	
64TH FLOOR	694'-3"	
65TH FLOOR	704'-6"	
66TH FLOOR	714'-9"	
67TH FLOOR	725'-0"	
68TH FLOOR	735'-3"	
69TH FLOOR	745'-6"	
70TH FLOOR	755'-11"	

2. SLAB TO BE: 12" THICK (60TH - 69TH FL.) U.O.N. THUS ▭ ON PLAN.
   14" THICK (70TH FL.) U.O.N. THUS ▭ ON PLAN.
3. BOTTOM REINFORCEMENT TO BE #5@12 CONT. E.W.
4. FOR BALANCE OF NOTES SEE DRAWING S-010.
5. FOR STR. INTEGRITY REINF. ADDL INFORMATION SEE S-965.

60TH FLOOR BEAM SCHEDULE

BEAM MARK	SIZE WIDTH	SIZE DEPTH	REINFORCEMENT BOTTOM CONTINUOUS	REINFORCEMENT TOP CONTINUOUS	REINFORCEMENT TOP ADDL BARS AT SUPPORT	STIRRUPS TYPE	STIRRUPS SIZE	STIRRUPS SPACING	REMARKS
60B1	12	30	2-#6	4-#9		1	#4	@8	CANTILEVER
60B2	10	24	2-#8	2-#8		1	#4	@10	

TYPE 1

STIRRUP TYPES

KEY PLAN:

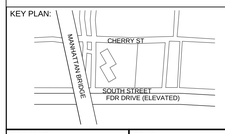

PROJECT NORTH

TRUE NORTH

DEVELOPER:
EXTELL DEVELOPMENT COMPANY
805 Third Ave, 7th Floor
New York, NY 10022
TEL: 212-712-6000 FAX: 212-712-6100

ARCHITECT OF RECORD:
AAI ARCHITECTS, P.C.
14 Wall Street, 2nd Floor
New York, NY 10005
TEL: 212-964-4040 FAX: 212-964-4090

INTERIOR DESIGNER:
MEYER DAVIS
180 Varick St, suite 404
New York, NY 10014
TEL: 212-627-5574

LANDSCAPE DESIGNER:
WEST 8 URBAN DESIGN & LANDSCAPE ARCHITECTURE P.C.
333 Hudson Street, Suite 905
New York, NY 10013
TEL: 212-285-0088 FAX: 212-285-0228

STRUCTURAL ENGINEERS:
WSP
228 East 45th Street
New York, NY 10017
TEL: 212-687-9888 FAX: 646-487-5501

MEP ENGINEERS:
ICOR ASSOCIATES, LLC
485 C Route 1 South, Suite 200
Iseline, NJ 08830
TEL: 908-272-3300 FAX: 908-272-4440

GEOTECHNICAL ENGINEERS:
LANGAN ENGINEERING & ENVIRONMENTAL SERVICES
21 Penn Plaza - 360 West 31st Street, 8th Floor
New York, NY 10001
TEL: 212.479.5400 FAX: 212.479.5444

No.	DESCRIPTION:	DATE:
	50% DD	08-01-14
	DESIGN DEVELOPMENT	10-07-14
	CONCRETE BID PACKAGE	03-06-15
	50% CONSTRUCTION DOCUMENTS	04-08-15
	ISSUED FOR FILING	07-28-15
	80% CONSTRUCTION DOCUMENTS	08-14-15
1	ASI #82	01-16-17
2	ASI #86	03-17-17
3	ISSUED FOR FILING	05-22-17

Discrepancies must be reported immediately to the Architect before proceeding. Only figured dimensions are to be used. Contractors must check all dimensions on site. This drawing is protected by copyright.

ALL DIMENSIONS ARE SHOWN IN IMPERIAL.

CONSULTANT:
WSP

PROJECT:
252 SOUTH STREET
NEW YORK, NY

DRAWING TITLE:
60TH-70TH FLOORS OVERALL FRAMING PLAN

SEAL & SIGNATURE:
STATE OF NEW YORK · AHMAD RAHIMIAN · No. 065502 · LICENSED PROFESSIONAL ENGINEER

DATE:	07/31/14
PROJECT No:	1302510
DRAWN: CAD	REV:
CHK: CL	
SCALE:	
DWG No:	**S-600.01**
DOB PAGE No:	of

DOB EMPLOYEE STAMP:
Tina Mathew, RA
APPROVED
Under Directive 2 of 1975
AMENDED APPLICATION
Date: 10/23/2017
NYC Development Hub

DOB B-SCAN:

FILE NAME:
PLOT DATE:

1 S-601 60TH-70TH FRAMING PLAN - PART 1

SCALE: 3/16" = 1'-0"

NOTE:
1. FOR NOTES SEE CORESPONDING OVERALL FRAMING PLAN

KEY PLAN:

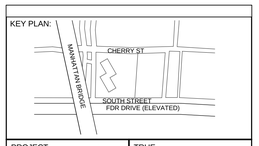

PROJECT NORTH

TRUE NORTH

DEVELOPER:
EXTELL DEVELOPMENT COMPANY
805 Third Ave, 7th Floor
New York, NY 10022
TEL: 212-712-6000 FAX: 212-712-6100

ARCHITECT OF RECORD:
AAI ARCHITECTS, P.C.
14 Wall Street, 2nd Floor
New York, NY 10005
TEL: 212-964-4040 FAX: 212-964-4090

INTERIOR DESIGNER:
MEYER DAVIS
180 Varick St, suite 404
New York, NY 10014
TEL: 212-627-5574

LANDSCAPE DESIGNER:
WEST 8 URBAN DESIGN & LANDSCAPE ARCHITECTURE P.C.
333 Hudson Street, Suite 905
New York, NY 10013
TEL: 212-285-0088 FAX: 212-285-0228

STRUCTURAL ENGINEERS:
WSP
228 East 45th Street
New York, NY 10017
TEL: 212-687-9888 FAX: 646-487-5501

MEP ENGINEERS:
ICOR ASSOCIATES, LLC
485 C Route 1 South, Suite 200
Iseline, NJ 08830
TEL: 908-272-3300 FAX: 908-272-4440

GEOTECHNICAL ENGINEERS:
LANGAN ENGINEERING & ENVIRONMENTAL SERVICES
21 Penn Plaza - 360 West 31st Street, 8th Floor
New York, NY 10001
TEL: 212.479.5400 FAX: 212.479.5444

No.	DESCRIPTION:	DATE:
	50% DD	08-01-14
	DESIGN DEVELOPMENT	10-07-14
	CONCRETE BID PACKAGE	03-06-15
	50% CONSTRUCTION DOCUMENTS	04-08-15
	ISSUED FOR FILING	07-28-15
	80% CONSTRUCTION DOCUMENTS	08-14-15
	ISSUE FOR CONSTRUCTION	03-18-16
1	ASI #76	10-28-16
2	ASI #82	01-16-17
3	ASI #86	03-17-17
4	ASI #88	04-14-17
5	ISSUED FOR FILING	05-22-17

Discrepancies must be reported immediately to the Architect before proceeding. Only figured dimensions are to be used. Contractors must check all dimensions on site. This drawing is protected by copyright.

ALL DIMENSIONS ARE SHOWN IN IMPERIAL.

CONSULTANT:
WSP

PROJECT:
252 SOUTH STREET
NEW YORK, NY

DRAWING TITLE:
60TH-70TH FRAMING PLAN - PART 1

SEAL & SIGNATURE:

STATE OF NEW YORK · AHMAD RAHIMIAN · No. 065537 · LICENSED PROFESSIONAL ENGINEER

DATE:	07/31/14	
PROJECT No:	1302510	
DRAWN:	CAD	REV:
CHK:	CL	
SCALE:		
DWG No:	S-601.01	
DOB PAGE No:	of	

DOB EMPLOYEE STAMP:

Tina Mathew, RA
APPROVED
Under Directive 2 of 1975
AMENDED APPLICATION
Date: 10/23/2017
NYC Development Hub

DOB B-SCAN:

FILE NAME:
PLOT DATE:

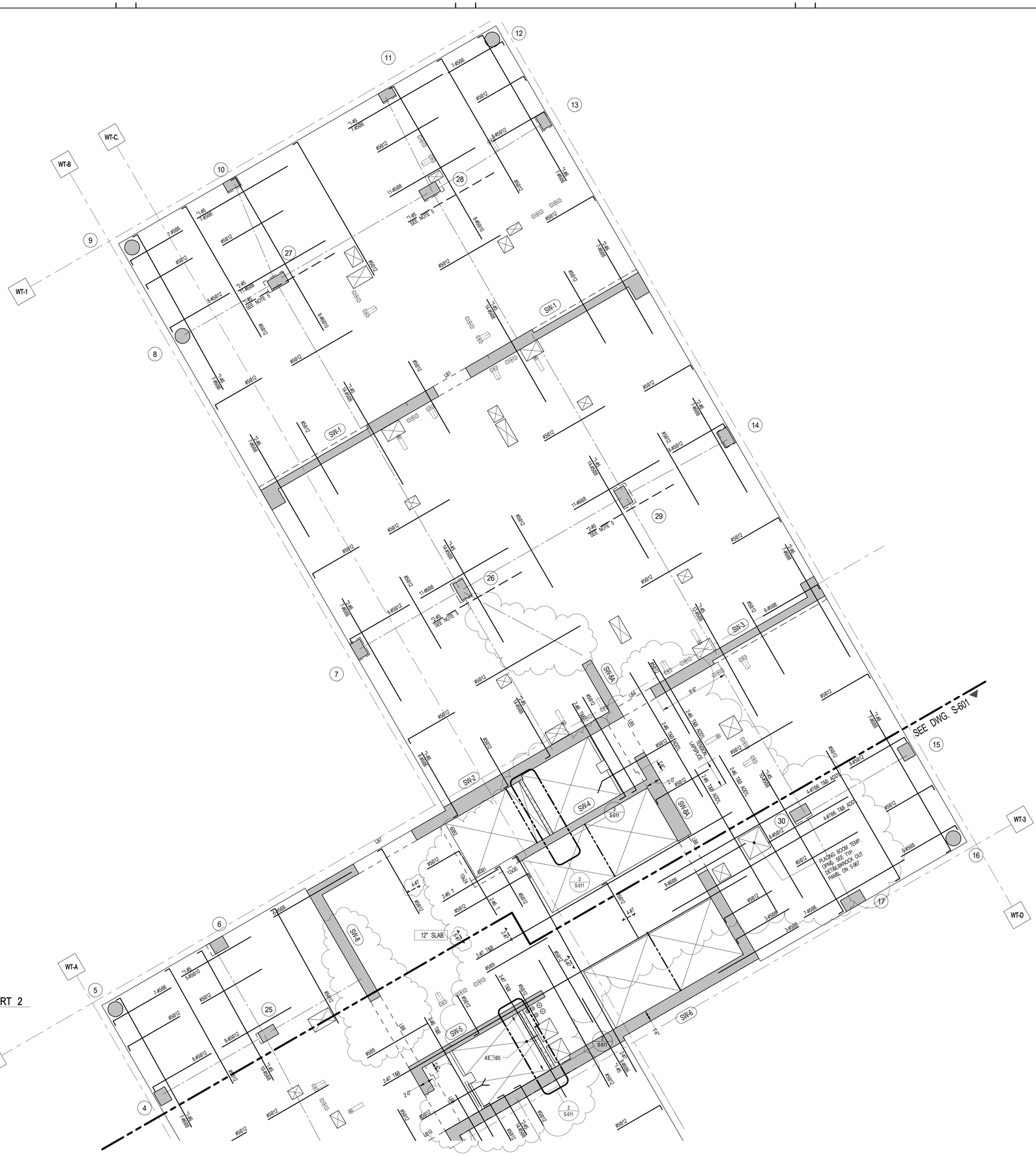

1 S-602 60TH-69TH FRAMING PLAN - PART 2

SCALE: 3/16" = 1'-0"

NOTE:
1. FOR NOTES SEE CORESPONDING OVERALL FRAMING PLAN

KEY PLAN:

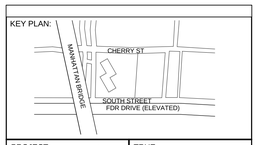

PROJECT NORTH

TRUE NORTH

DEVELOPER:
EXTELL DEVELOPMENT COMPANY
805 Third Ave, 7th Floor
New York, NY 10022
TEL: 212-712-6000 FAX: 212-712-6100

ARCHITECT OF RECORD:
AAI ARCHITECTS, P.C.
14 Wall Street, 2nd Floor
New York, NY 10005
TEL: 212-964-4040 FAX: 212-964-4090

INTERIOR DESIGNER:
MEYER DAVIS
180 Varick St, suite 404
New York, NY 10014
TEL: 212-627-5574

LANDSCAPE DESIGNER:
WEST 8 URBAN DESIGN & LANDSCAPE ARCHITECTURE P.C.
333 Hudson Street, Suite 905
New York, NY 10013
TEL: 212-285-0088 FAX: 212-285-0228

STRUCTURAL ENGINEERS:
WSP
228 East 45th Street
New York, NY 10017
TEL: 212-687-9888 FAX: 646-487-5501

MEP ENGINEERS:
ICOR ASSOCIATES, LLC
485 C Route 1 South, Suite 200
Iseline, NJ 08830
TEL: 908-272-3300 FAX: 908-272-4440

GEOTECHNICAL ENGINEERS:
LANGAN ENGINEERING & ENVIRONMENTAL SERVICES
21 Penn Plaza - 360 West 31st Street, 8th Floor
New York, NY 10001
TEL: 212.479.5400 FAX: 212.479.5444

No.	DESCRIPTION:	DATE:
	50% DD	08-01-14
	DESIGN DEVELOPMENT	10-07-14
	CONCRETE BID PACKAGE	03-06-15
	50% CONSTRUCTION DOCUMENTS	04-08-15
	ISSUED FOR FILING	07-28-15
	80% CONSTRUCTION DOCUMENTS	08-14-15
	ISSUE FOR CONSTRUCTION	03-18-16
1	ASI #76	10-28-16
2	ASI #82	01-16-17
3	ASI #86	03-17-17
4	ASI #88	04-14-17
5	ISSUED FOR FILING	05-22-17

Discrepancies must be reported immediately to the Architect before proceeding. Only figured dimensions are to be used. Contractors must check all dimensions on site. This drawing is protected by copyright.

ALL DIMENSIONS ARE SHOWN IN IMPERIAL.

CONSULTANT:
WSP

PROJECT:
252 SOUTH STREET
NEW YORK, NY

DRAWING TITLE:
60TH-70TH FRAMING PLAN - PART 2

SEAL & SIGNATURE:
STATE OF NEW YORK
AHMAD RAHIMIAN
No. 065537
LICENSED PROFESSIONAL ENGINEER

DATE:	07/31/14
PROJECT No:	1302510
DRAWN: CAD	REV:
CHK: CL	
SCALE:	
DWG No:	S-602.01
DOB PAGE No:	of

DOB EMPLOYEE STAMP:
Tina Mathew, RA
APPROVED
Under Directive 2 of 1975
AMENDED APPLICATION
Date: 10/23/2017
NYC Development Hub

DOB B-SCAN:

30" x 42" Arch E1 - SHEET SIZE

FILE NAME:
PLOT DATE:

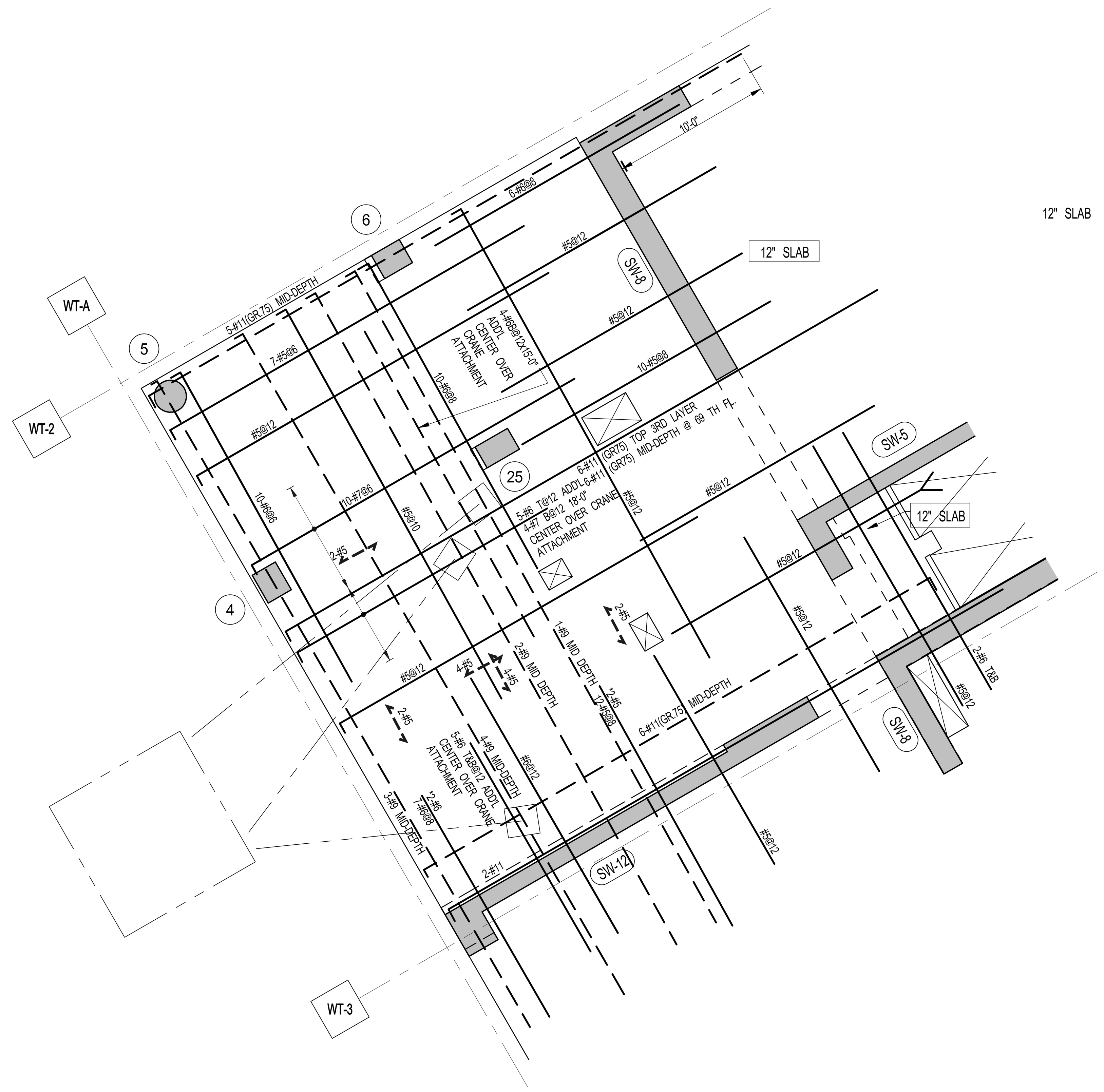

12" SLAB

1 — 60TH & 69TH FLOOR FRAMING PART PLAN (AT CRANE TIES)

S-603

SCALE: 3/16" = 1'-0"

NOTE:
1. FOR NOTES SEE CORRESPONDING OVERALL FRAMING PLAN.

KEY PLAN:

CHERRY ST
MANHATTAN BRIDGE
SOUTH STREET
FDR DRIVE (ELEVATED)

PROJECT NORTH

TRUE NORTH

DEVELOPER:
EXTELL DEVELOPMENT COMPANY
805 Third Ave, 7th Floor
New York, NY 10022
TEL: 212-712-6000 FAX: 212-712-6100

ARCHITECT OF RECORD:
AAI ARCHITECTS, P.C.
14 Wall Street, 2nd Floor
New York, NY 10005
TEL: 212-964-4040 FAX: 212-964-4090

INTERIOR DESIGNER:
MEYER DAVIS
180 Varick St, suite 404
New York, NY 10014
TEL: 212-627-5574

LANDSCAPE DESIGNER:
WEST 8 URBAN DESIGN & LANDSCAPE ARCHITECTURE P.C.
333 Hudson Street, Suite 905
New York, NY 10013
TEL: 212-285-0088 FAX: 212-285-0228

STRUCTURAL ENGINEERS:
WSP
228 East 45th Street
New York, NY 10017
TEL: 212-687-9888 FAX: 646-487-5501

MEP ENGINEERS:
ICOR ASSOCIATES, LLC
485 C Route 1 South, Suite 200
Iseline, NJ 08830
TEL: 908-272-3300 FAX: 908-272-4440

GEOTECHNICAL ENGINEERS:
LANGAN ENGINEERING & ENVIRONMENTAL SERVICES
21 Penn Plaza - 360 West 31st Street, 8th Floor
New York, NY 10001
TEL: 212.479.5400 FAX: 212.479.5444

No.	DESCRIPTION:	DATE:
1	ASI #82	01-16-17
	ISSUED FOR FILING	05-22-17

Discrepancies must be reported immediately to the Architect before proceeding. Only figured dimensions are to be used. Contractors must check all dimensions on site. This drawing is protected by copyright.

ALL DIMENSIONS ARE SHOWN IN IMPERIAL.

CONSULTANT:
WSP

PROJECT:
252 SOUTH STREET
NEW YORK, NY

DRAWING TITLE:
60TH & 69TH FLOOR FRAMING PART PLAN (AT CRANE TIES)

SEAL & SIGNATURE:
STATE OF NEW YORK — AHMAD RAHIMIAN — LICENSED PROFESSIONAL ENGINEER

DATE:	01/16/17
PROJECT No:	1302510
DRAWN: CAD	REV:
CHK: CL	
SCALE: 3/16" = 1'-0"	
DWG No:	S-603.00
DOB PAGE No: of	

DOB EMPLOYEE STAMP:
Tina Mathew, RA
APPROVED
Under Directive 2 of 1975
AMENDED APPLICATION
Date: 10/23/2017
NYC Development Hub

DOB B-SCAN:

DEPT OF BLDGS 121185528 Job Number
ES133227032 Scan Code

30" x 42" Arch E1 - SHEET SIZE

FILE NAME:
PLOT DATE:

DEPT OF BLDGS121805628 Job Number
E.581311741/6 Scan Code
30" x 42" Anti El. SHEET SIZE

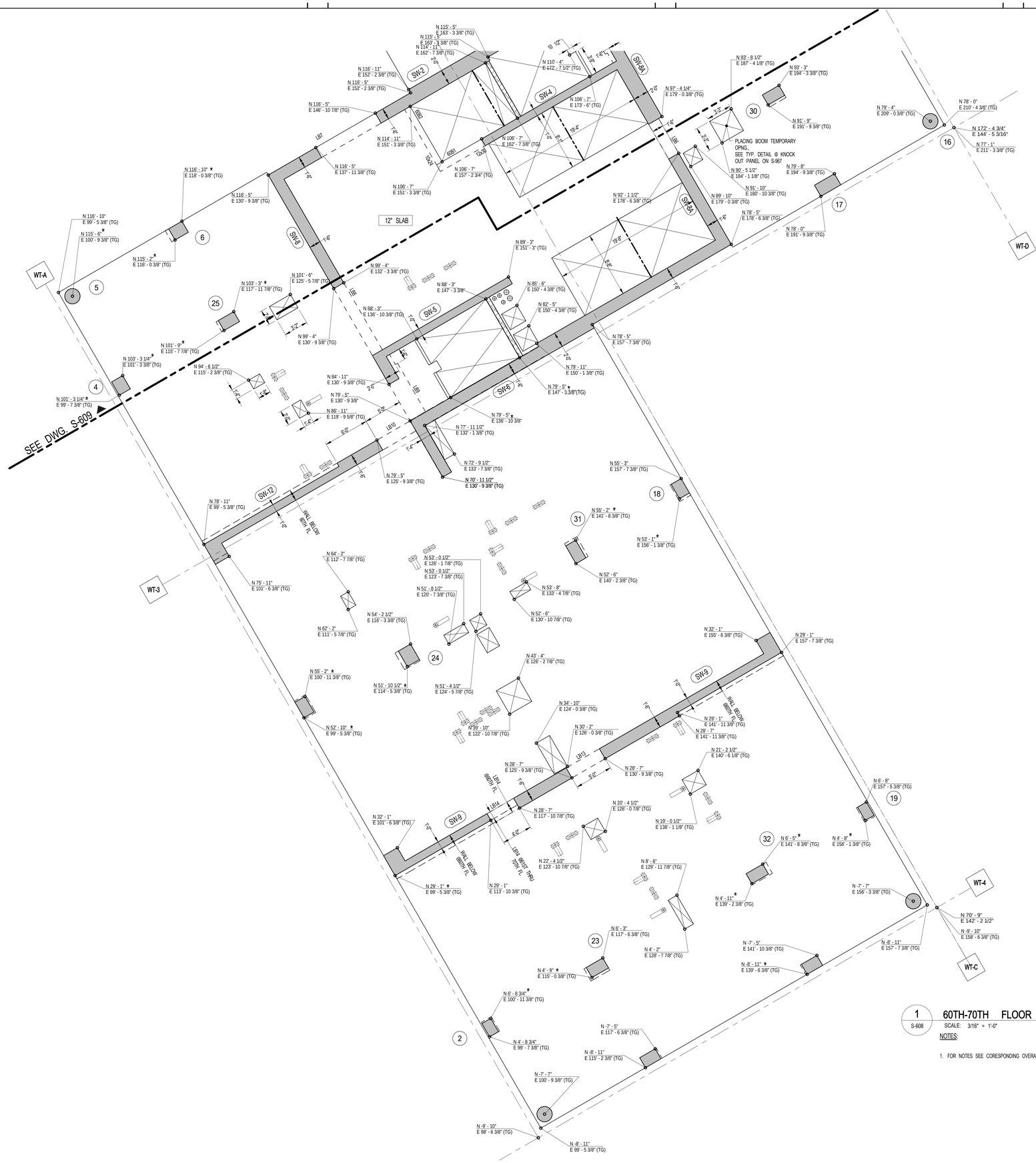

1 S-608 — 60TH-70TH FLOOR GENERAL ARRANGEMENT PLAN - PART 1

SCALE: 3/16" = 1'-0"

NOTES:

1. FOR NOTES SEE CORESPONDING OVERALL FRAMING PLAN.

KEY PLAN:

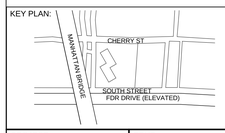

PROJECT NORTH

TRUE NORTH

DEVELOPER:
EXTELL DEVELOPMENT COMPANY
805 Third Ave, 7th Floor
New York, NY 10022
TEL: 212-712-6000 FAX: 212-712-6100

ARCHITECT OF RECORD:
AAI ARCHITECTS, P.C.
14 Wall Street, 2nd Floor
New York, NY 10005
TEL: 212-964-4040 FAX: 212-964-4090

INTERIOR DESIGNER:
MEYER DAVIS
180 Varick St, suite 404
New York, NY 10014
TEL: 212-627-5574

LANDSCAPE DESIGNER:
WEST 8 URBAN DESIGN & LANDSCAPE ARCHITECTURE P.C.
333 Hudson Street, Suite 905
New York, NY 10013
TEL: 212-285-0088 FAX: 212-285-0228

STRUCTURAL ENGINEERS:
WSP
228 East 45th Street
New York, NY 10017
TEL: 212-687-9888 FAX: 646-487-5501

MEP ENGINEERS:
ICOR ASSOCIATES, LLC
485 C Route 1 South, Suite 200
Iseline, NJ 08830
TEL: 908-272-3300 FAX: 908-272-4440

GEOTECHNICAL ENGINEERS:
LANGAN ENGINEERING & ENVIRONMENTAL SERVICES
21 Penn Plaza - 360 West 31st Street, 8th Floor
New York, NY 10001
TEL: 212.479.5400 FAX: 212.479.5444

No.	DESCRIPTION:	DATE:
	ISSUE FOR CONSTRUCTION	03-18-16
1	ASI #82	01-16-17
2	ASI #86	03-17-17
3	ASI #88	04-14-17
	ISSUED FOR FILING	05-22-17

Discrepancies must be reported immediately to the Architect before proceeding. Only figured dimensions are to be used. Contractors must check all dimensions on site. This drawing is protected by copyright.

ALL DIMENSIONS ARE SHOWN IN IMPERIAL.

CONSULTANT:
WSP

PROJECT:
252 SOUTH STREET
NEW YORK, NY

DRAWING TITLE:
60TH-70TH FLOOR GENERAL ARRANGEMENT PLAN - PART 1

SEAL & SIGNATURE:
STATE OF NEW YORK — AHMAD RASHDAN — No. 085857 — LICENSED PROFESSIONAL ENGINEER

DATE: 08/07/15
PROJECT No: 1302510
DRAWN: CAD REV:
CHK: CL
SCALE: As indicated
DWG No: **S-608.00**
DOB PAGE No: of

DOB EMPLOYEE STAMP:
Tina Mathew, RA
APPROVED
Under Directive 1 of 1975
AMENDED APPLICATION
Date: 10/23/2017
NYC Development Hub

DOB B-SCAN:

FILE NAME:
PLOT DATE:

DEPT OF BLDGS121185539 Job Number
E395992847.99 Scan Code
30" x 42" Anti El. SHEET SIZE

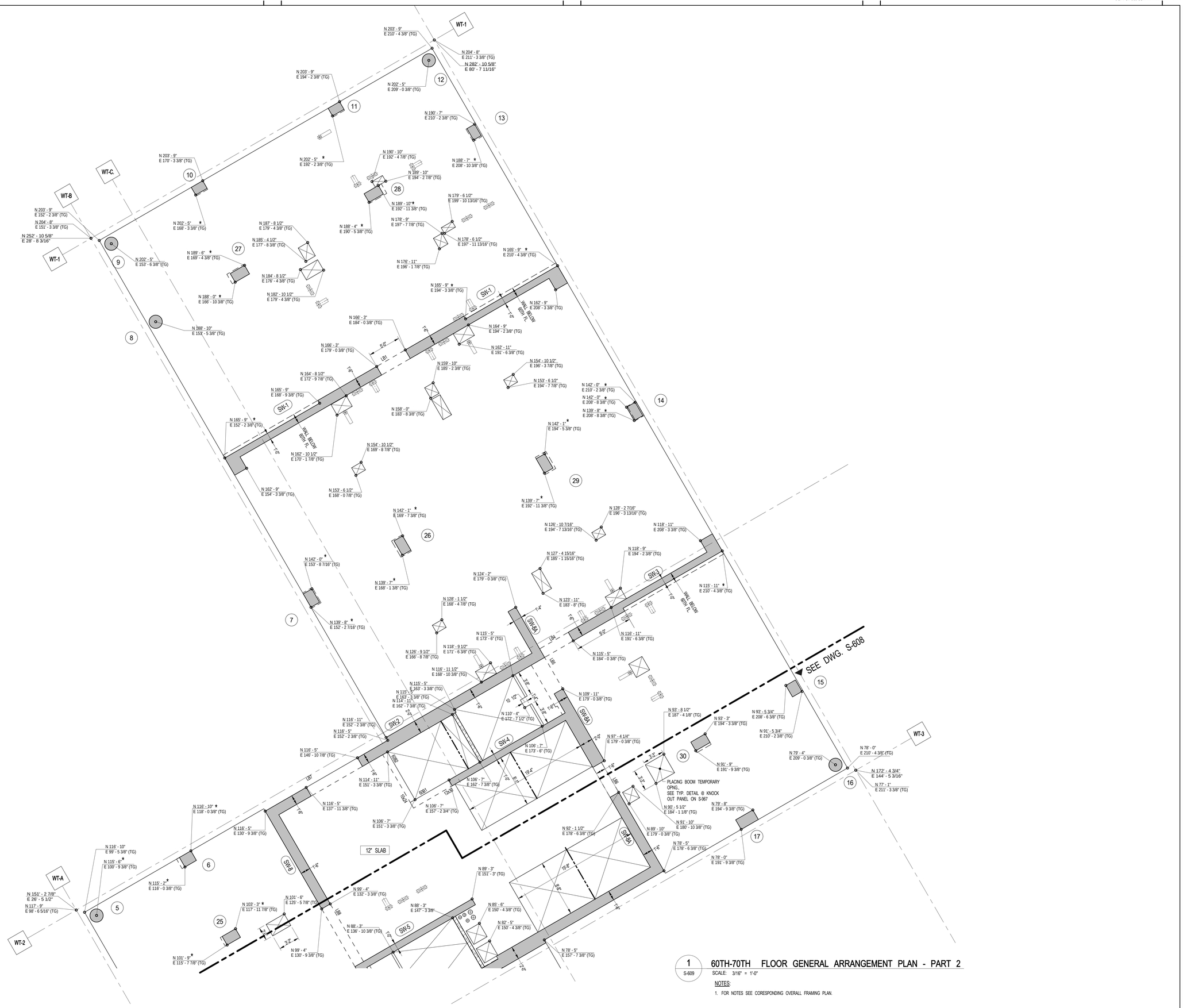

FILE NAME:
PLOT DATE:

KEY PLAN:

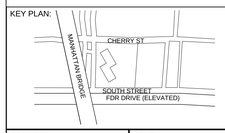

PROJECT NORTH

TRUE NORTH

DEVELOPER:
EXTELL DEVELOPMENT COMPANY
805 Third Ave, 7th Floor
New York, NY 10022
TEL: 212-712-6000 FAX: 212-712-6100

ARCHITECT OF RECORD:
AAI ARCHITECTS, P.C.
14 Wall Street, 2nd Floor
New York, NY 10005
TEL: 212-964-4040 FAX: 212-964-4090

INTERIOR DESIGNER:
MEYER DAVIS
180 Varick St, suite 404
New York, NY 10014
TEL: 212-627-5574

LANDSCAPE DESIGNER:
WEST 8 URBAN DESIGN & LANDSCAPE ARCHITECTURE P.C.
333 Hudson Street, Suite 905
New York, NY 10013
TEL: 212-285-0088 FAX: 212-285-0228

STRUCTURAL ENGINEERS:
WSP
228 East 45th Street
New York, NY 10017
TEL: 212-687-9888 FAX: 646-487-5501

MEP ENGINEERS:
ICOR ASSOCIATES, LLC
485 C Route 1 South, Suite 200
Iseline, NJ 08830
TEL: 908-272-3300 FAX: 908-272-4440

GEOTECHNICAL ENGINEERS:
LANGAN ENGINEERING & ENVIRONMENTAL SERVICES
21 Penn Plaza - 360 West 31st Street, 8th Floor
New York, NY 10001
TEL: 212.479.5400 FAX: 212.479.5444

No.	DESCRIPTION:	DATE:
	ISSUE FOR CONSTRUCTION	03-18-16
1	ASI #82	01-16-17
2	ASI #86	03-17-17
3	ASI #88	04-14-17
	ISSUED FOR FILING	05-22-17

Discrepancies must be reported immediately to the Architect before proceeding. Only figured dimensions are to be used. Contractors must check all dimensions on site. This drawing is protected by copyright.

ALL DIMENSIONS ARE SHOWN IN IMPERIAL.

CONSULTANT:
WSP

PROJECT:
252 SOUTH STREET
NEW YORK, NY

DRAWING TITLE:
60TH-70TH FLOOR GENERAL ARRANGEMENT PLAN - PART 2

SEAL & SIGNATURE:
STATE OF NEW YORK · ANMAD RAHMAN · No. 085652 · LICENSED PROFESSIONAL ENGINEER

DATE:	08/07/15
PROJECT No:	1302510
DRAWN: CAD	REV:
CHK: CL	
SCALE: As indicated	
DWG No:	S-609.00
DOB PAGE No:	of

DOB EMPLOYEE STAMP:
Tina Mathew, RA
APPROVED
Under Directive 2 of 1975
AMENDED APPLICATION
Date: 10/23/2017
NYC Development Hub

DOB B-SCAN:

DEPT OF BLDGS121185539 Job Number
E366539853529 Scan Code
30" x 42" Arch E1 SHEET SIZE

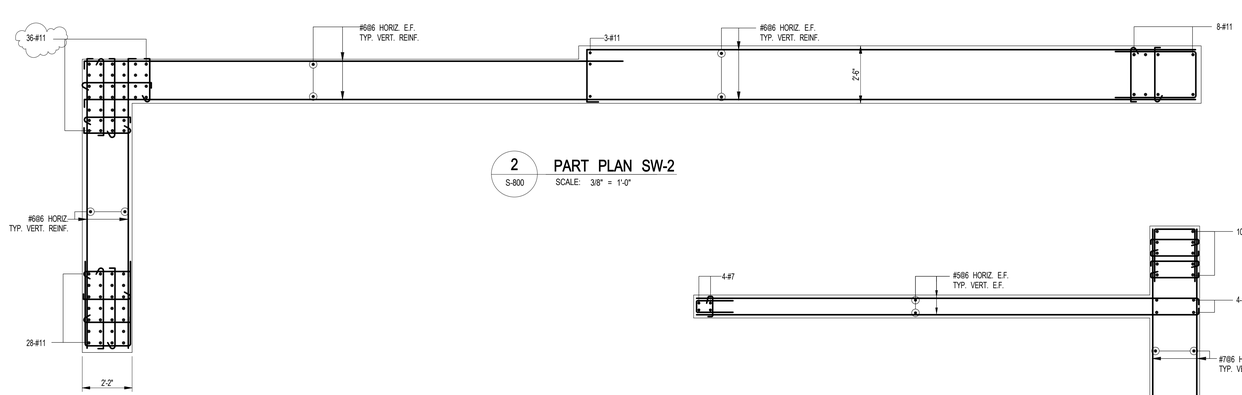

2 S-800 PART PLAN SW-2
SCALE: 3/8" = 1'-0"

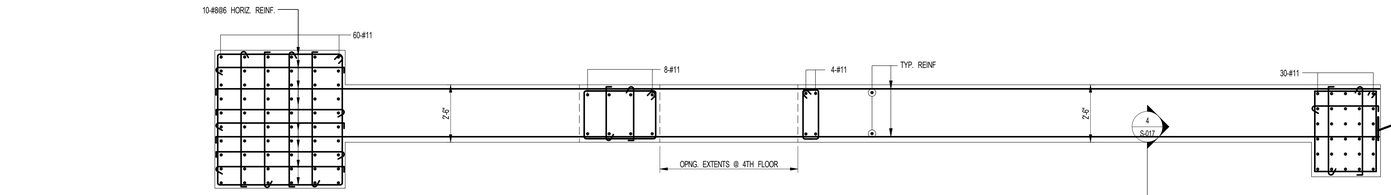

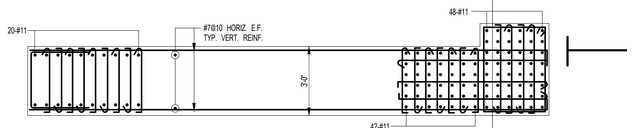

3 S-800 PART PLAN SW-3
SCALE: 3/8" = 1'-0"

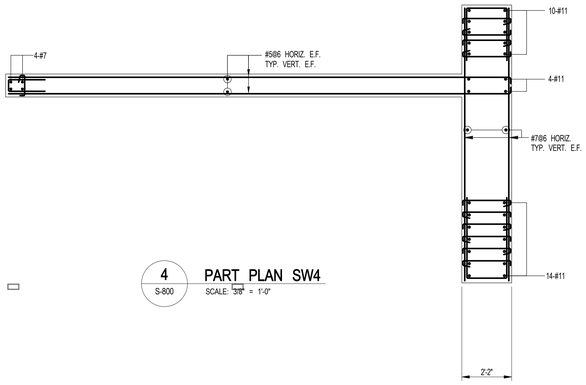

4 S-800 PART PLAN SW4
SCALE: 3/8" = 1'-0"

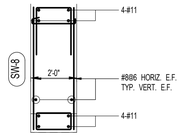

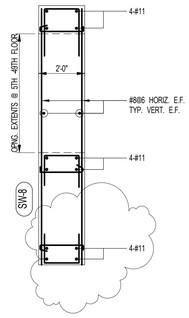

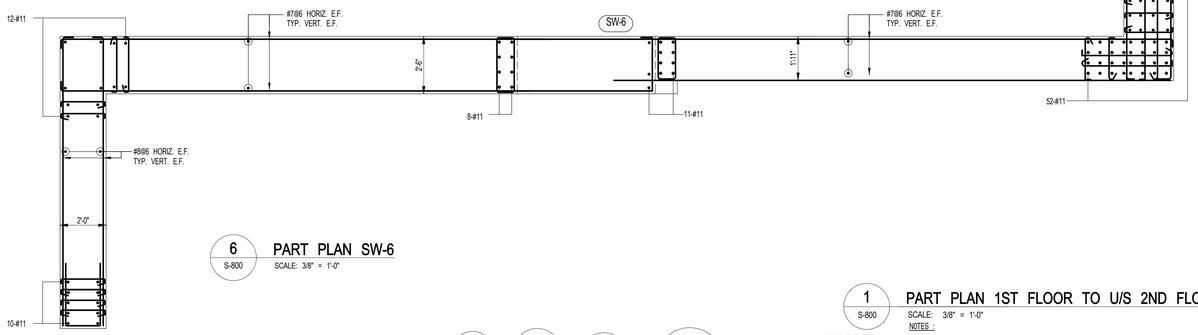

5 S-800 PART PLAN SW-5
SCALE: 3/8" = 1'-0"

6 S-800 PART PLAN SW-6
SCALE: 3/8" = 1'-0"

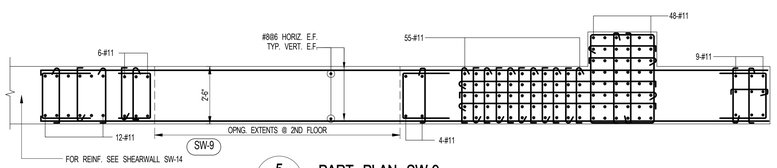

5 S-800 PART PLAN SW-9
SCALE: 3/8" = 1'-0"

1 S-800 PART PLAN 1ST FLOOR TO U/S 2ND FLOOR SHEARWALL DETAILS
SCALE: 3/8" = 1'-0"
NOTES :
1. FOR NOTES SEE DRAWING S-940

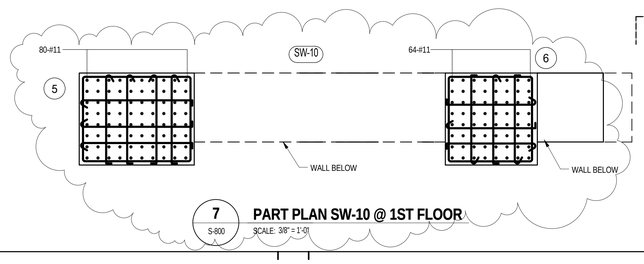

7 S-800 PART PLAN SW-10 @ 1ST FLOOR
SCALE: 3/8" = 1'-0"

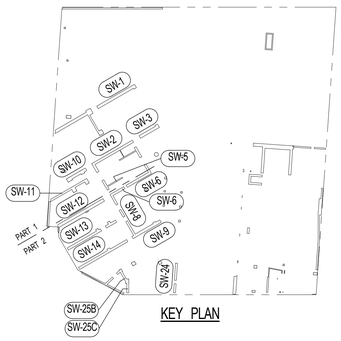

KEY PLAN

KEY PLAN:
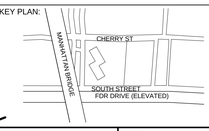

PROJECT NORTH
TRUE NORTH

DEVELOPER:
EXTELL DEVELOPMENT COMPANY
805 Third Ave, 7th Floor
New York, NY 10022
TEL: 212-712-6000 FAX: 212-712-6100

ARCHITECT OF RECORD:
AAI ARCHITECTS, P.C.
14 Wall Street, 2nd Floor
New York, NY 10005
TEL: 212-964-4040 FAX: 212-964-4090

INTERIOR DESIGNER:
MEYER DAVIS
180 Varick St, suite 404
New York, NY 10014
TEL: 212-627-5574

LANDSCAPE DESIGNER:
WEST 8 URBAN DESIGN & LANDSCAPE ARCHITECTURE P.C.
333 Hudson Street, Suite 905
New York, NY 10013
TEL: 212-285-0088 FAX: 212-285-0228

STRUCTURAL ENGINEERS:
WSP
228 East 45th Street
New York, NY 10017
TEL: 212-687-9888 FAX: 646-487-5501

MEP ENGINEERS:
ICOR ASSOCIATES, LLC
485 C Route 1 South, Suite 200
Iseline, NJ 08830
TEL: 908-272-3300 FAX: 908-272-4440

GEOTECHNICAL ENGINEERS:
LANGAN ENGINEERING & ENVIRONMENTAL SERVICES
21 Penn Plaza - 360 West 31st Street, 8th Floor
New York, NY 10001
TEL: 212.479.5400 FAX: 212.479.5444

No.	DESCRIPTION:	DATE:
	CONCRETE BID PACKAGE	03-06-15
	ISSUED FOR FILING	07-28-15
	80% CONSTRUCTION DOCUMENTS	08-14-15
	ISSUED FOR FILING	05-22-17

Discrepancies must be reported immediately to the Architect before proceeding. Only figured dimensions are to be used. Contractors must check all dimensions on site. This drawing is protected by copyright.

ALL DIMENSIONS ARE SHOWN IN IMPERIAL.

CONSULTANT:
WSP

PROJECT:
252 SOUTH STREET
NEW YORK, NY

DRAWING TITLE:
1ST FLOOR TO U/S 2ND FLOOR SHEARWALL DETAILS

SEAL & SIGNATURE:
STATE OF NEW YORK · AHMAD RASTEGAR · No. 085857 · LICENSED PROFESSIONAL ENGINEER

DATE:	03/03/15
PROJECT No:	1302510
DRAWN: CAD	REV:
CHK: CL	
SCALE: As indicated	

DWG No:
S-800.02

DOB PAGE No: of

DOB EMPLOYEE STAMP:
Tina Mathew, RA
APPROVED
Under Directive 1 of 1975
AMENDED APPLICATION
Date: 10/23/2017
NYC Development Hub

DOB B-SCAN:

FILE NAME:
PLOT DATE:

DEPT OF BLDGS121105639 Job Number
E-S634.3019008 Scan Code

30" x 42" Arch E1 SHEET SIZE

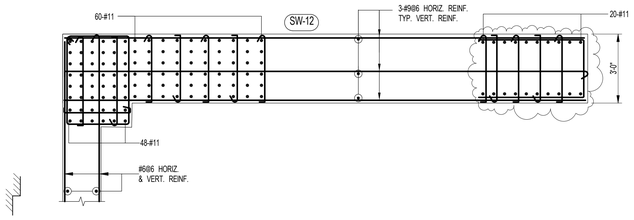

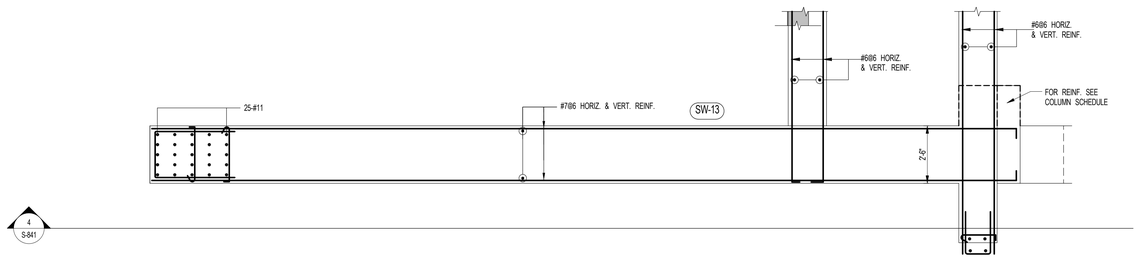

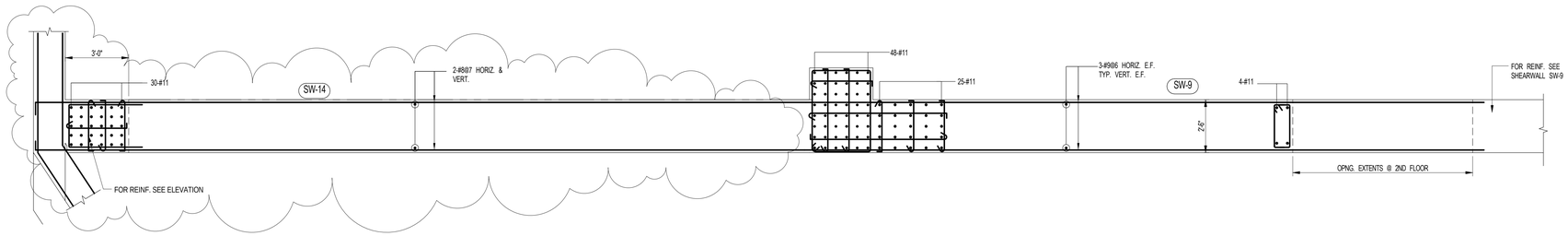

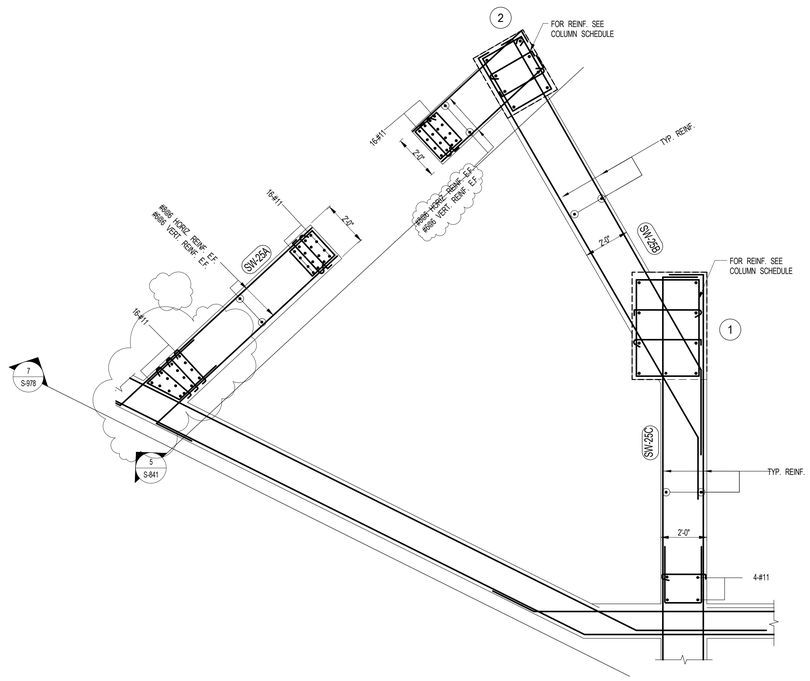

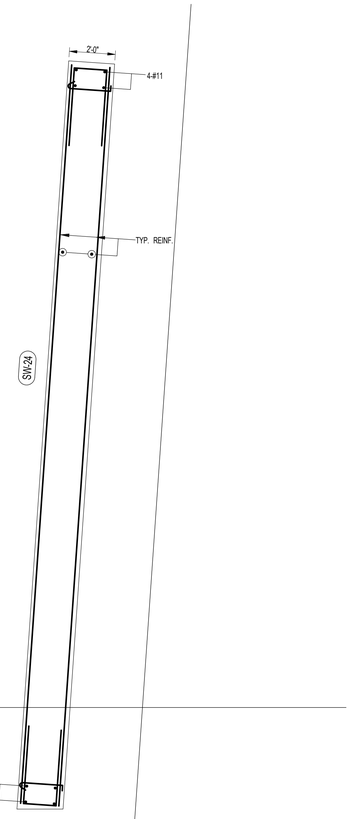

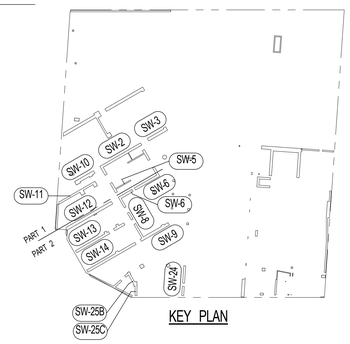

KEY PLAN

1 PART PLAN 1ST FLOOR TO U/S 2ND FLOOR SHEARWALL DETAILS

1
S-801

SCALE: 3/8" = 1'-0"

NOTES :

1. FOR NOTES SEE DRAWING S-940

8
S-978

KEY PLAN: 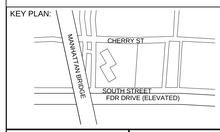

PROJECT NORTH

TRUE NORTH

DEVELOPER:
EXTELL DEVELOPMENT COMPANY
805 Third Ave, 7th Floor
New York, NY 10022
TEL: 212-712-6000 FAX: 212-712-6100

ARCHITECT OF RECORD:
AAI ARCHITECTS, P.C.
14 Wall Street, 2nd Floor
New York, NY 10005
TEL: 212-964-4040 FAX: 212-964-4090

INTERIOR DESIGNER:
MEYER DAVIS
180 Varick St, suite 404
New York, NY 10014
TEL: 212-627-5574

LANDSCAPE DESIGNER:
WEST 8 URBAN DESIGN & LANDSCAPE ARCHITECTURE P.C.
333 Hudson Street, Suite 905
New York, NY 10013
TEL: 212-285-0088 FAX: 212-285-0228

STRUCTURAL ENGINEERS:
WSP
228 East 45th Street
New York, NY 10017
TEL: 212-687-9888 FAX: 646-487-5501

MEP ENGINEERS:
ICOR ASSOCIATES, LLC
485 C Route 1 South, Suite 200
Iseline, NJ 08830
TEL: 908-272-3300 FAX: 908-272-4440

GEOTECHNICAL ENGINEERS:
LANGAN ENGINEERING & ENVIRONMENTAL SERVICES
21 Penn Plaza - 360 West 31st Street, 8th Floor
New York, NY 10001
TEL: 212.479.5400 FAX: 212.479.5444

No.	DESCRIPTION:	DATE:
	CONCRETE BID PACKAGE	03-06-15
	ISSUED FOR FILING	07-28-15
	80% CONSTRUCTION DOCUMENTS	08-14-15
	ADDENDUM #11	09-25-15
	ISSUED FOR FILING	05-22-17

Discrepancies must be reported immediately to the Architect before proceeding. Only figured dimensions are to be used. Contractors must check all dimensions on site. This drawing is protected by copyright.

ALL DIMENSIONS ARE SHOWN IN IMPERIAL.

CONSULTANT: WSP

PROJECT:
252 SOUTH STREET
NEW YORK, NY

DRAWING TITLE:
1ST FLOOR TO U/S 2ND FLOOR SHEARWALL DETAILS

SEAL & SIGNATURE: STATE OF NEW YORK · AHMAD RAMADAN · No. 085027 · LICENSED PROFESSIONAL ENGINEER

DATE:	03/04/15
PROJECT No:	1302510
DRAWN: CAD	REV:
CHK: CL	
SCALE: As indicated	
DWG No:	**S-801.02**
DOB PAGE No:	of

DOB EMPLOYEE STAMP: Tina Mathew, RA — APPROVED Under Directive 2 of 1975 AMENDED APPLICATION Date: 10/23/2017 NYC Development Hub

DOB B-SCAN:

FILE NAME:
PLOT DATE:

DEPT OF BLDGS121185639 Job Number
E3505280944 Scan Code

30" x 42" Arch E1 SHEET SIZE

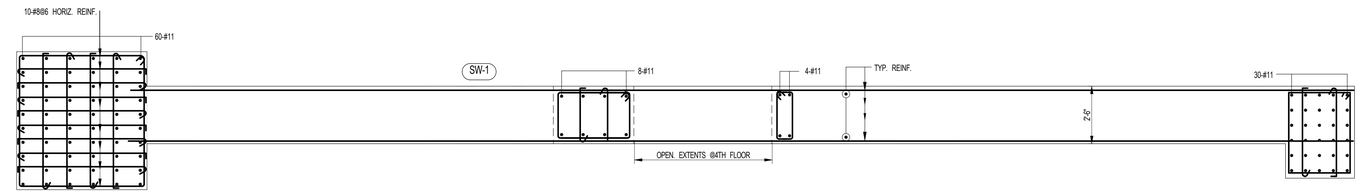

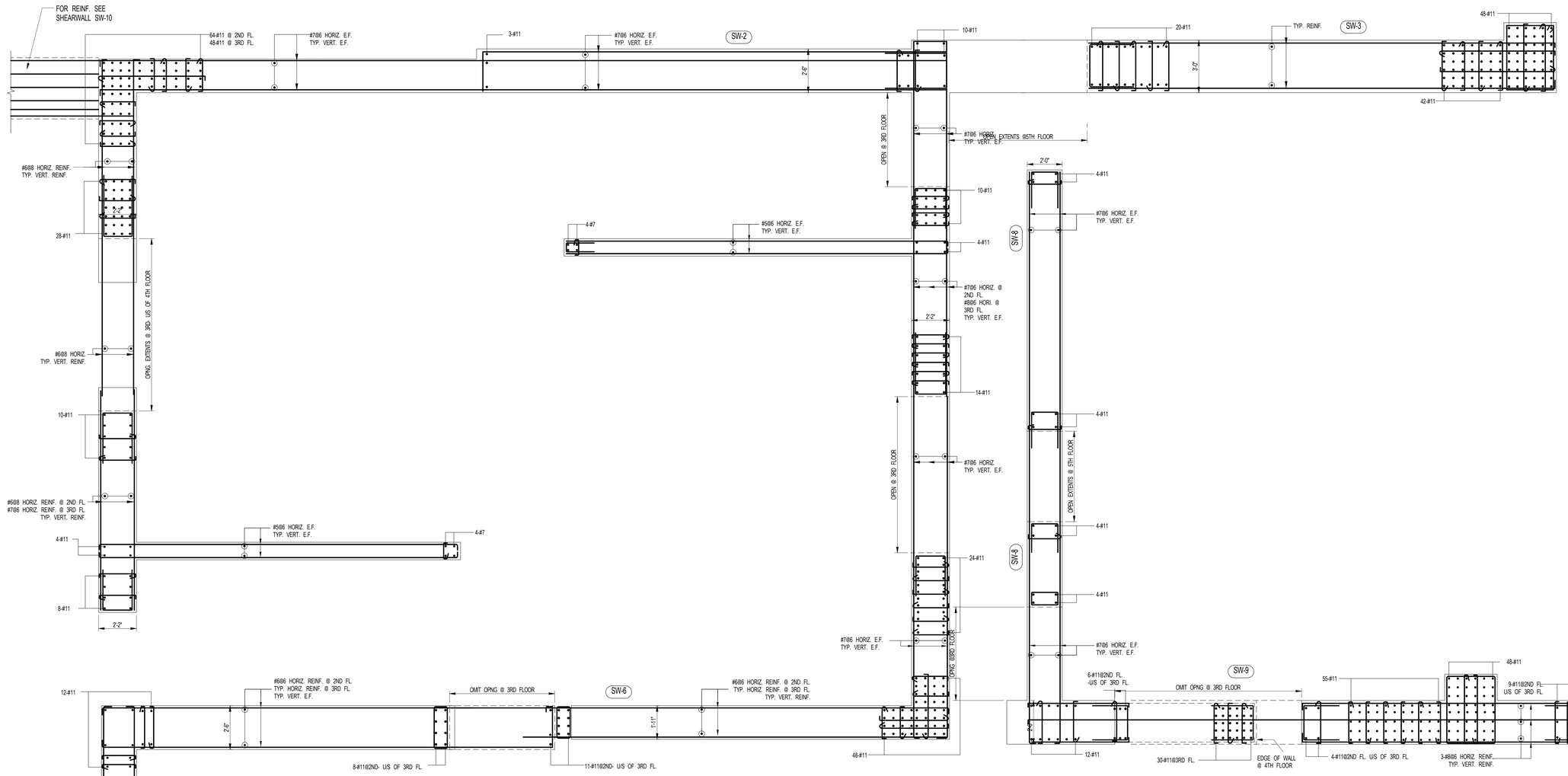

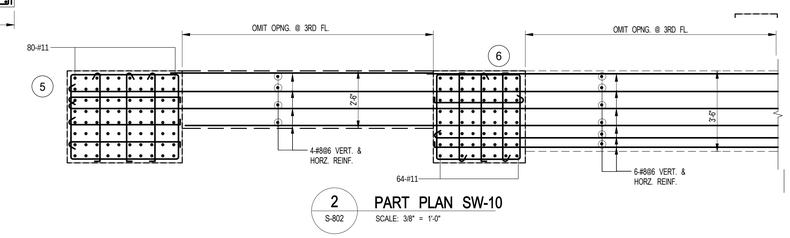

1 S-802 **PART PLAN 2ND FLOOR TO U/S 4TH FLOOR SHEARWALL DETAILS**
SCALE: 3/8" = 1'-0"

NOTES :

1. FOR NOTES SEE DRAWING S-940

2 S-802 **PART PLAN SW-10**
SCALE: 3/8" = 1'-0"

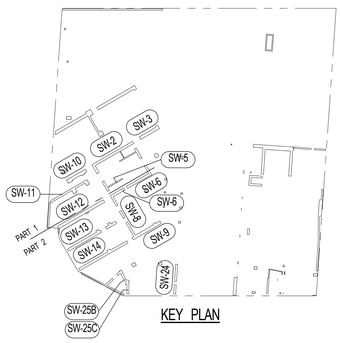

KEY PLAN

KEY PLAN:

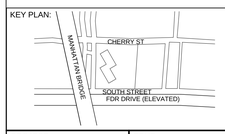

PROJECT NORTH

TRUE NORTH

DEVELOPER:
EXTELL DEVELOPMENT COMPANY
805 Third Ave, 7th Floor
New York, NY 10022
TEL: 212-712-6000 FAX: 212-712-6100

ARCHITECT OF RECORD:
AAI ARCHITECTS, P.C.
14 Wall Street, 2nd Floor
New York, NY 10005
TEL: 212-964-4040 FAX: 212-964-4090

INTERIOR DESIGNER:
MEYER DAVIS
180 Varick St, suite 404
New York, NY 10014
TEL: 212-627-5574

LANDSCAPE DESIGNER:
WEST 8 URBAN DESIGN & LANDSCAPE ARCHITECTURE P.C.
333 Hudson Street, Suite 905
New York, NY 10013
TEL: 212-285-0088 FAX: 212-285-0228

STRUCTURAL ENGINEERS:
WSP
228 East 45th Street
New York, NY 10017
TEL: 212-687-9888 FAX: 646-487-5501

MEP ENGINEERS:
ICOR ASSOCIATES, LLC
485 C Route 1 South, Suite 200
Iseline, NJ 08830
TEL: 908-272-3300 FAX: 908-272-4440

GEOTECHNICAL ENGINEERS:
LANGAN ENGINEERING & ENVIRONMENTAL SERVICES
21 Penn Plaza - 360 West 31st Street, 8th Floor
New York, NY 10001
TEL: 212.479.5400 FAX: 212.479.5444

No.	DESCRIPTION:	DATE:
	CONCRETE BID PACKAGE	03-06-15
	80% CONSTRUCTION DOCUMENTS	08-14-15
	ISSUED FOR FILING	05-22-17

Discrepancies must be reported immediately to the Architect before proceeding. Only figured dimensions are to be used. Contractors must check all dimensions on site. This drawing is protected by copyright.

ALL DIMENSIONS ARE SHOWN IN IMPERIAL.

CONSULTANT:
WSP

PROJECT:
252 SOUTH STREET
NEW YORK, NY

DRAWING TITLE:
2ND FLOOR TO U/S 4TH FLOOR SHEARWALL DETAILS

SEAL & SIGNATURE:

DATE:	03/05/15
PROJECT No:	1302510
DRAWN: CAD	REV:
CHK: CL	
SCALE: As indicated	
DWG No:	**S-802.00**
DOB PAGE No:	of

DOB EMPLOYEE STAMP:

Tina Mathew, RA
APPROVED
Under Directive 2 of 1975
AMENDED APPLICATION
Date: 10/23/2017
NYC Development Hub

DOB B-SCAN:

FILE NAME:
PLOT DATE:

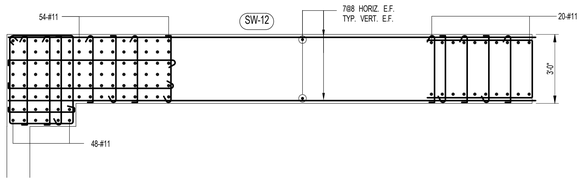

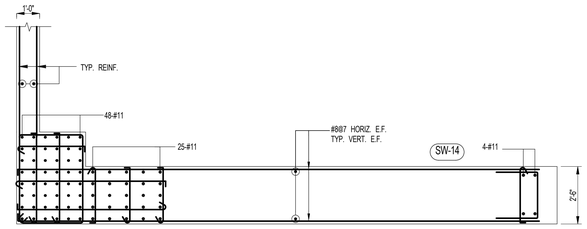

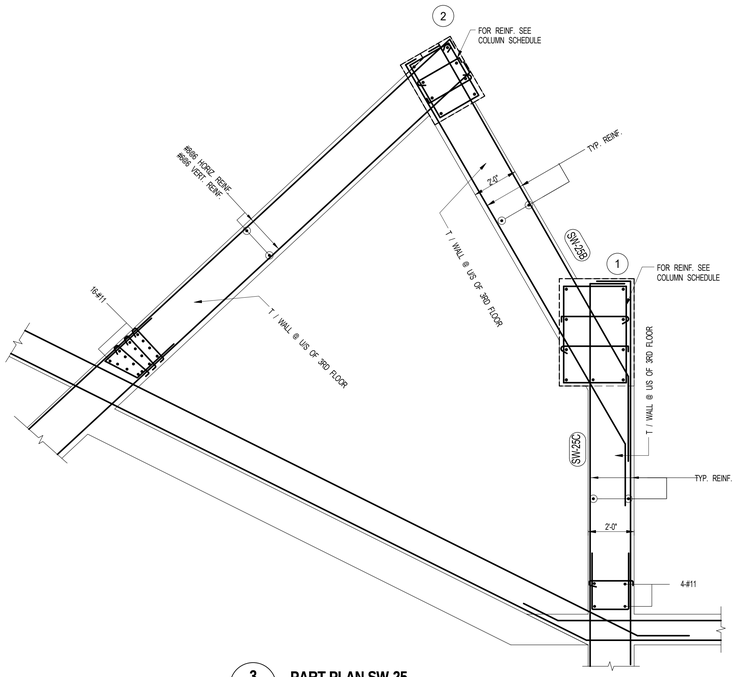

3 S-803 **PART PLAN SW-25**
SCALE: 3/8" = 1'-0"

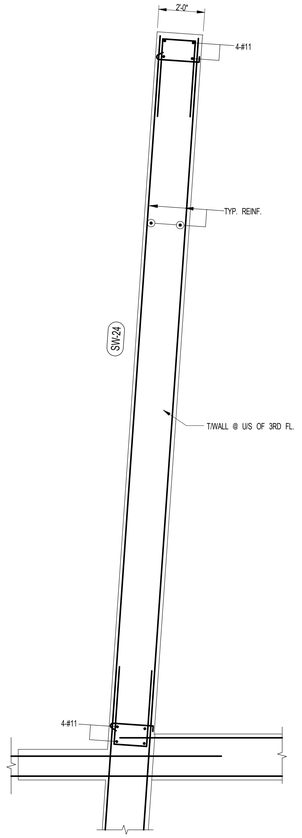

4 S-803 **PART PLAN SW-24**
SCALE: 3/8" = 1'-0"

1 S-803 **PART PLAN 2ND FLOOR TO U/S 4TH FLOOR SHEARWALL DETAILS**
SCALE: 3/8" = 1'-0"
NOTES :
1. FOR NOTES SEE DRAWING S-940

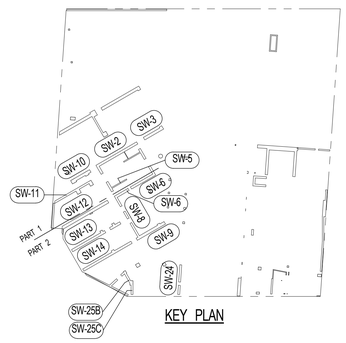

KEY PLAN

KEY PLAN:

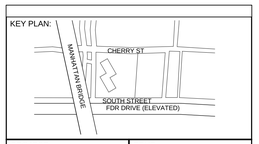

PROJECT NORTH

TRUE NORTH

DEVELOPER:
EXTELL DEVELOPMENT COMPANY
805 Third Ave, 7th Floor
New York, NY 10022
TEL: 212-712-6000 FAX: 212-712-6100

ARCHITECT OF RECORD:
AAI ARCHITECTS, P.C.
14 Wall Street, 2nd Floor
New York, NY 10005
TEL: 212-964-4040 FAX: 212-964-4090

INTERIOR DESIGNER:
MEYER DAVIS
180 Varick St, suite 404
New York, NY 10014
TEL: 212-627-5574

LANDSCAPE DESIGNER:
WEST 8 URBAN DESIGN & LANDSCAPE ARCHITECTURE P.C.
333 Hudson Street, Suite 905
New York, NY 10013
TEL: 212-285-0088 FAX: 212-285-0228

STRUCTURAL ENGINEERS:
WSP
228 East 45th Street
New York, NY 10017
TEL: 212-687-9888 FAX: 646-487-5501

MEP ENGINEERS:
ICOR ASSOCIATES, LLC
485 C Route 1 South, Suite 200
Iseline, NJ 08830
TEL: 908-272-3300 FAX: 908-272-4440

GEOTECHNICAL ENGINEERS:
LANGAN ENGINEERING & ENVIRONMENTAL SERVICES
21 Penn Plaza - 360 West 31st Street, 8th Floor
New York, NY 10001
TEL: 212.479.5400 FAX: 212.479.5444

No.	DESCRIPTION:	DATE:
	CONCRETE BID PACKAGE	03-06-15
	80% CONSTRUCTION DOCUMENTS	08-14-15
	ASI #13	08-26-15
	ADDENDUM #11	09-25-15
	ISSUED FOR FILING	05-22-17

Discrepancies must be reported immediately to the Architect before proceeding. Only figured dimensions are to be used. Contractors must check all dimensions on site. This drawing is protected by copyright.

ALL DIMENSIONS ARE SHOWN IN IMPERIAL.

CONSULTANT:
WSP

PROJECT:
252 SOUTH STREET
NEW YORK, NY

DRAWING TITLE:
2ND FLOOR TO U/S 4TH FLOOR SHEARWALL DETAILS

SEAL & SIGNATURE:
STATE OF NEW YORK
AHMAD RAHMAN
No. 065537
LICENSED PROFESSIONAL ENGINEER

DATE:	03/05/15
PROJECT No:	1302510
DRAWN: CAD	REV:
CHK: CL	
SCALE: As indicated	
DWG No:	S-803.00
DOB PAGE No:	of

DOB EMPLOYEE STAMP:
Tina Mathew, RA
APPROVED
Under Directive 2 of 1975
AMENDED APPLICATION
Date: 10/23/2017
NYC Development Hub

DOB B-SCAN:

30" x 42" Arch E1 - SHEET SIZE

FILE NAME:
PLOT DATE:

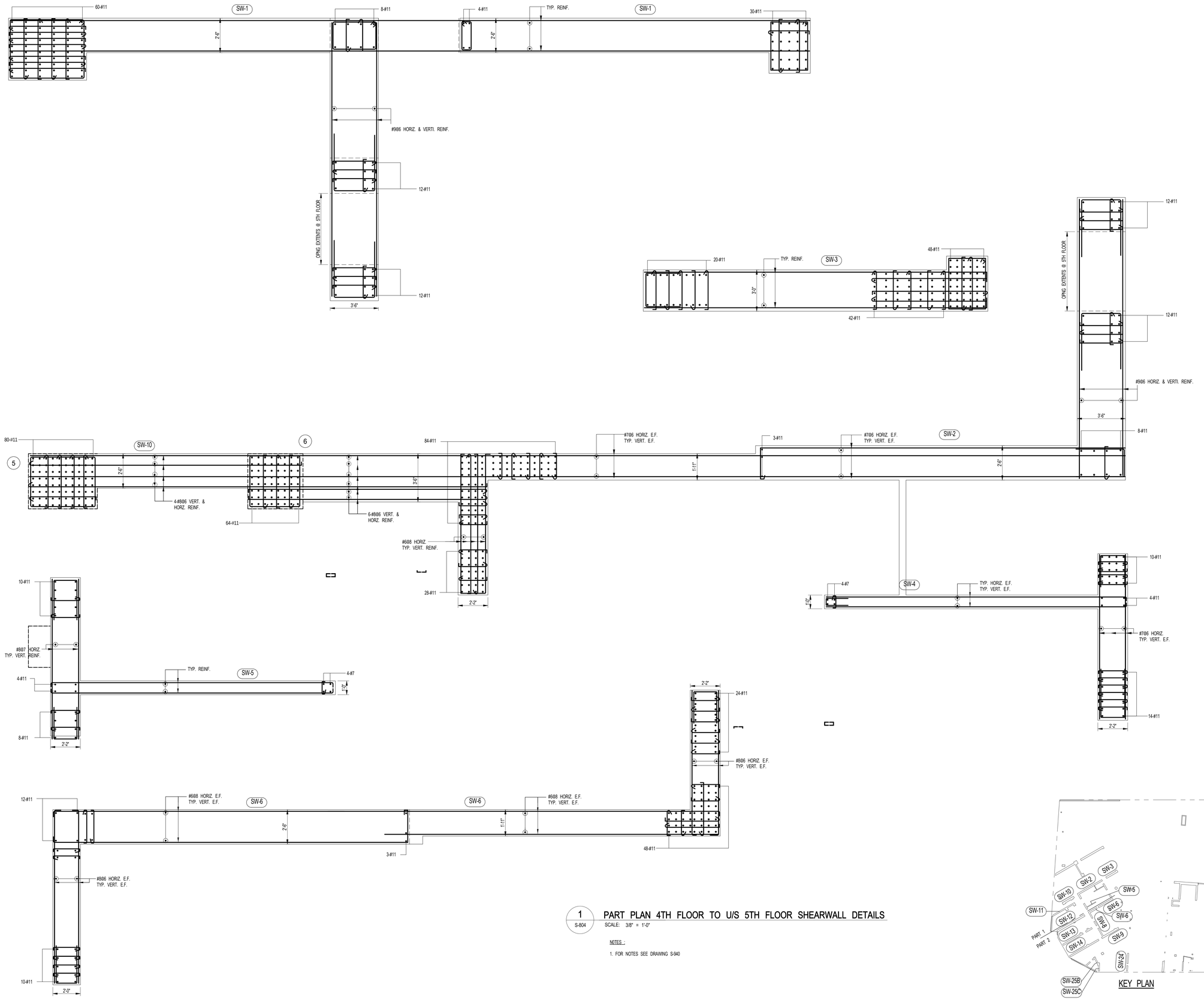

1 S-804 PART PLAN 4TH FLOOR TO U/S 5TH FLOOR SHEARWALL DETAILS

SCALE: 3/8" = 1'-0"

NOTES :

1. FOR NOTES SEE DRAWING S-940

KEY PLAN

KEY PLAN:

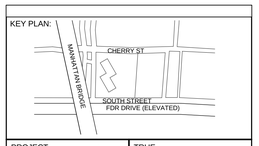

PROJECT NORTH

TRUE NORTH

DEVELOPER:
EXTELL DEVELOPMENT COMPANY
805 Third Ave, 7th Floor
New York, NY 10022
TEL: 212-712-6000 FAX: 212-712-6100

ARCHITECT OF RECORD:
AAI ARCHITECTS, P.C.
14 Wall Street, 2nd Floor
New York, NY 10005
TEL: 212-964-4040 FAX: 212-964-4090

INTERIOR DESIGNER:
MEYER DAVIS
180 Varick St, suite 404
New York, NY 10014
TEL: 212-627-5574

LANDSCAPE DESIGNER:
WEST 8 URBAN DESIGN & LANDSCAPE ARCHITECTURE P.C.
333 Hudson Street, Suite 905
New York, NY 10013
TEL: 212-285-0088 FAX: 212-285-0228

STRUCTURAL ENGINEERS:
WSP
228 East 45th Street
New York, NY 10017
TEL: 212-687-9888 FAX: 646-487-5501

MEP ENGINEERS:
ICOR ASSOCIATES, LLC
485 C Route 1 South, Suite 200
Iseline, NJ 08830
TEL: 908-272-3300 FAX: 908-272-4440

GEOTECHNICAL ENGINEERS:
LANGAN ENGINEERING & ENVIRONMENTAL SERVICES
21 Penn Plaza - 360 West 31st Street, 8th Floor
New York, NY 10001
TEL: 212.479.5400 FAX: 212.479.5444

No.	DESCRIPTION:	DATE:
	CONCRETE BID PACKAGE	03-06-15
	80% CONSTRUCTION DOCUMENTS	08-14-15
	ISSUE FOR CONSTRUCTION	03-18-16
	ISSUED FOR FILING	05-22-17

Discrepancies must be reported immediately to the Architect before proceeding. Only figured dimensions are to be used. Contractors must check all dimensions on site. This drawing is protected by copyright.

ALL DIMENSIONS ARE SHOWN IN IMPERIAL.

CONSULTANT:
WSP

PROJECT:
252 SOUTH STREET
NEW YORK, NY

DRAWING TITLE:
4TH FLOOR TO U/S 5TH FLOOR SHEARWALL DETAILS

SEAL & SIGNATURE:
STATE OF NEW YORK · AHMAD RAHIMIAN · No. 065537 · LICENSED PROFESSIONAL ENGINEER

DATE:	03/05/15
PROJECT No:	1302510
DRAWN: CAD	REV:
CHK: CL	
SCALE: As indicated	
DWG No:	S-804.00
DOB PAGE No:	of

DOB EMPLOYEE STAMP:
Tina Mathew, RA
APPROVED
Under Directive 2 of 1975
AMENDED APPLICATION
Date: 10/23/2017
NYC Development Hub

DOB B-SCAN:

30" x 42" Arch E1 - SHEET SIZE

FILE NAME:
PLOT DATE:

DEPT OF BLDGS121105539 Job Number
E367827537 Scan Code
30" x 42" Arch E1 SHEET SIZE

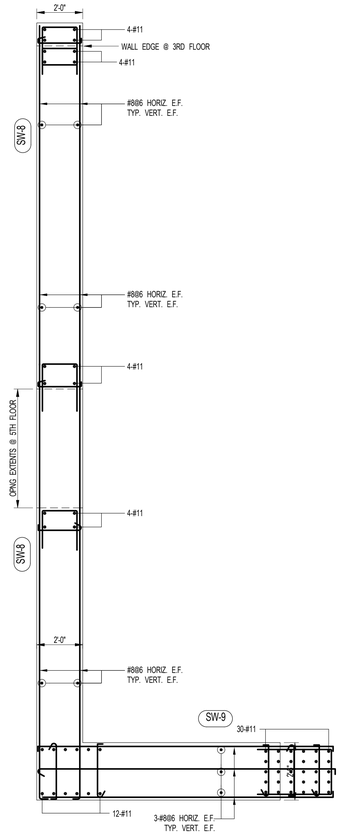

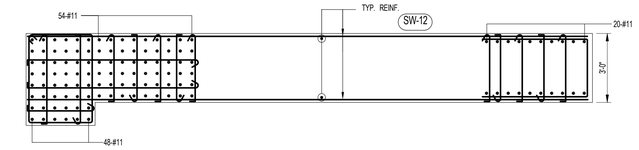

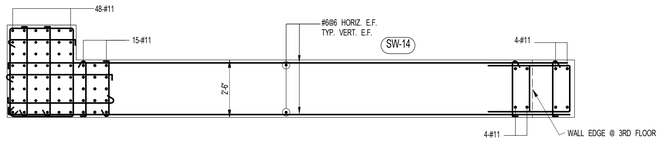

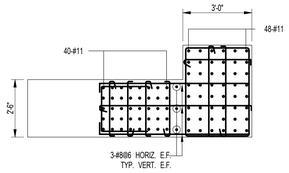

1 S-805 PART PLAN 4TH FLOOR TO U/S 5TH FLOOR SHEARWALL DETAILS

SCALE: 3/8" = 1'-0"

NOTES :

1. FOR NOTES SEE DRAWING S-940

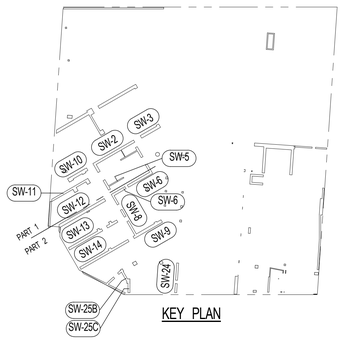

KEY PLAN

KEY PLAN:

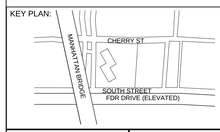

PROJECT NORTH

TRUE NORTH

DEVELOPER:
EXTELL DEVELOPMENT COMPANY
805 Third Ave, 7th Floor
New York, NY 10022
TEL: 212-712-6000 FAX: 212-712-6100

ARCHITECT OF RECORD:
AAI ARCHITECTS, P.C.
14 Wall Street, 2nd Floor
New York, NY 10005
TEL: 212-964-4040 FAX: 212-964-4090

INTERIOR DESIGNER:
MEYER DAVIS
180 Varick St, suite 404
New York, NY 10014
TEL: 212-627-5574

LANDSCAPE DESIGNER:
WEST 8 URBAN DESIGN & LANDSCAPE ARCHITECTURE P.C.
333 Hudson Street, Suite 905
New York, NY 10013
TEL: 212-285-0088 FAX: 212-285-0228

STRUCTURAL ENGINEERS:
WSP
228 East 45th Street
New York, NY 10017
TEL: 212-687-9888 FAX: 646-487-5501

MEP ENGINEERS:
ICOR ASSOCIATES, LLC
485 C Route 1 South, Suite 200
Iseline, NJ 08830
TEL: 908-272-3300 FAX: 908-272-4440

GEOTECHNICAL ENGINEERS:
LANGAN ENGINEERING & ENVIRONMENTAL SERVICES
21 Penn Plaza - 360 West 31st Street, 8th Floor
New York, NY 10001
TEL: 212.479.5400 FAX: 212.479.5444

No.	DESCRIPTION:	DATE:
	CONCRETE BID PACKAGE	03-06-15
	80% CONSTRUCTION DOCUMENTS	08-14-15
	ISSUED FOR FILING	05-22-17

Discrepancies must be reported immediately to the Architect before proceeding. Only figured dimensions are to be used. Contractors must check all dimensions on site. This drawing is protected by copyright.

ALL DIMENSIONS ARE SHOWN IN IMPERIAL.

CONSULTANT:
WSP

PROJECT:
252 SOUTH STREET
NEW YORK, NY

DRAWING TITLE:
4TH FLOOR TO U/S 5TH FLOOR SHEARWALL DETAILS

SEAL & SIGNATURE:

DATE: 03/06/15
PROJECT No: 1302510
DRAWN: CAD REV:
CHK: CL
SCALE: As indicated
DWG No: **S-805.00**
DOB PAGE No: of

DOB EMPLOYEE STAMP:

Tina Mathew, RA
APPROVED
Under Directive 2 of 1975
AMENDED APPLICATION
Date: 10/23/2017
NYC Development Hub

DOB B-SCAN:

FILE NAME:
PLOT DATE:

DEPT OF BLDGS121305639 Job Number
ES705539520 Scan Code

30" x 42" Arch E1 SHEET SIZE

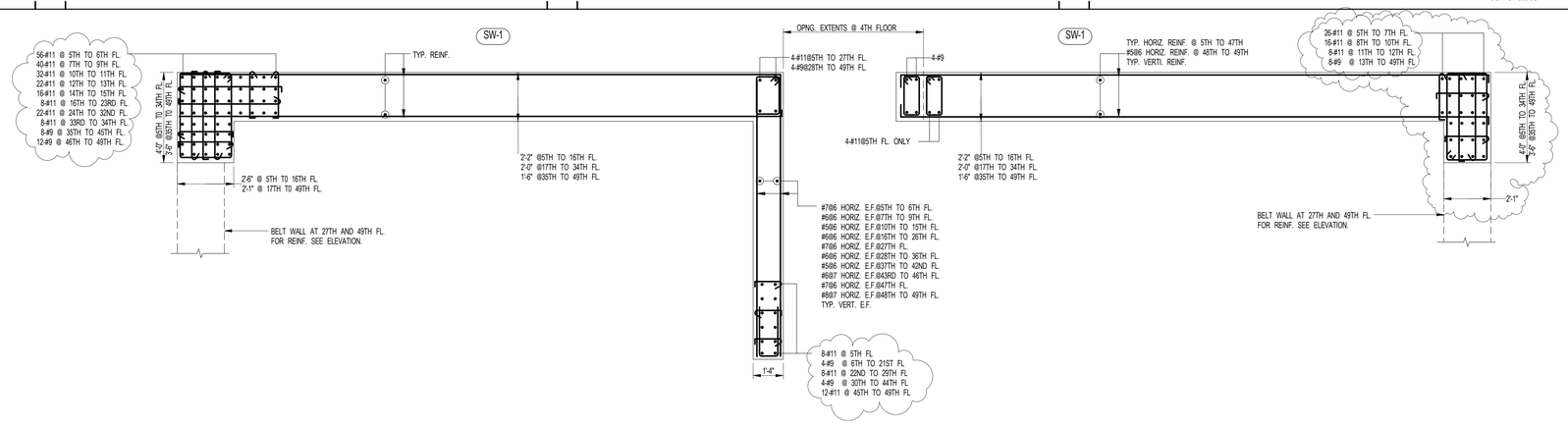

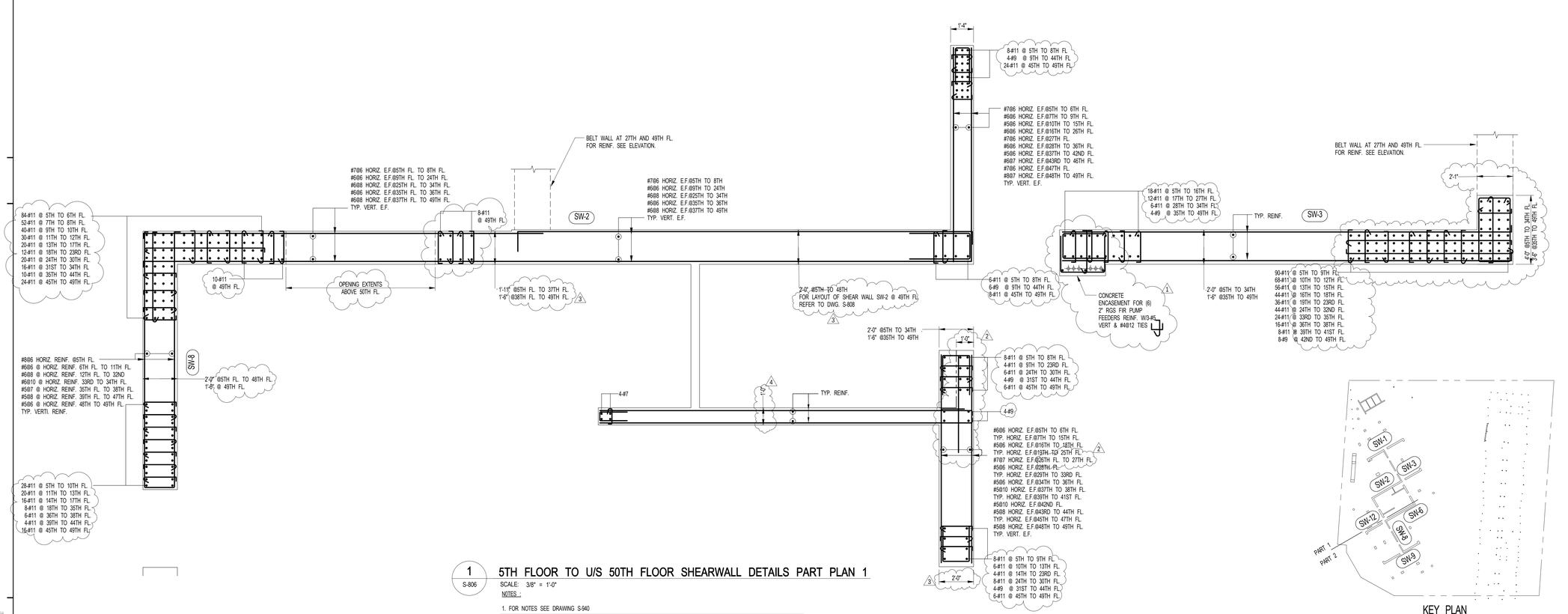

KEY PLAN

1 S-806 — 5TH FLOOR TO U/S 50TH FLOOR SHEARWALL DETAILS PART PLAN 1

SCALE: 3/8" = 1'-0"

NOTES :

1. FOR NOTES SEE DRAWING S-940

OUTRIGGER WALL @ 27TH & 49TH FLOOR NOT SHOWN FOR CLARITY. FOR WALL CONFIGURATION SEE CORRESPONDING FRAMING PLAN. FOR REINF. SEE ELEVATIONS.

FILE NAME:
PLOT DATE:

KEY PLAN:

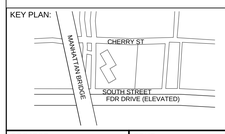

PROJECT NORTH

TRUE NORTH

DEVELOPER:
EXTELL DEVELOPMENT COMPANY
805 Third Ave, 7th Floor
New York, NY 10022
TEL: 212-712-6000 FAX: 212-712-6100

ARCHITECT OF RECORD:
AAI ARCHITECTS, P.C.
14 Wall Street, 2nd Floor
New York, NY 10005
TEL: 212-964-4040 FAX: 212-964-4090

INTERIOR DESIGNER:
MEYER DAVIS
180 Varick St, suite 404
New York, NY 10014
TEL: 212-627-5574

LANDSCAPE DESIGNER:
WEST 8 URBAN DESIGN & LANDSCAPE ARCHITECTURE P.C.
333 Hudson Street, Suite 905
New York, NY 10013
TEL: 212-285-0088 FAX: 212-285-0228

STRUCTURAL ENGINEERS:
WSP
228 East 45th Street
New York, NY 10017
TEL: 212-687-9888 FAX: 646-487-5501

MEP ENGINEERS:
ICOR ASSOCIATES, LLC
485 C Route 1 South, Suite 200
Iselin, NJ 08830
TEL: 908-272-3300 FAX: 908-272-4440

GEOTECHNICAL ENGINEERS:
LANGAN ENGINEERING & ENVIRONMENTAL SERVICES
21 Penn Plaza - 360 West 31st Street, 8th Floor
New York, NY 10001
TEL: 212.479.5400 FAX: 212.479.5444

No.	DESCRIPTION:	DATE:
	CONCRETE BID PACKAGE	03-06-15
	50% CONSTRUCTION DOCUMENTS	04-08-15
	ISSUED FOR FILING	07-28-15
	80% CONSTRUCTION DOCUMENTS	08-14-15
	ISSUE FOR CONSTRUCTION	03-18-16
1	ASI #67	06-17-16
2	ASI #73	08-19-16
3	ASI #80	12-09-16
4	ASI #82	01-16-17
	ISSUED FOR FILING	05-22-17

Discrepancies must be reported immediately to the Architect before proceeding. Only figured dimensions are to be used. Contractors must check all dimensions on site. This drawing is protected by copyright.

ALL DIMENSIONS ARE SHOWN IN IMPERIAL.

CONSULTANT:
WSP

PROJECT:
252 SOUTH STREET
NEW YORK, NY

DRAWING TITLE:
5TH FLOOR TO U/S 50TH FLOOR SHEARWALL DETAILS

SEAL & SIGNATURE:

DATE:	03/03/15
PROJECT No:	1302510
DRAWN: CAD	REV:
CHK: CL	
SCALE: As indicated	
DWG No:	**S-806.02**
DOB PAGE No:	of

DOB EMPLOYEE STAMP:

Tina Mathew, RA
APPROVED
Under Directive 2 of 1975
AMENDED APPLICATION
Date: 10/23/2017
NYC Development Hub

DOB B-SCAN:

DEPT OF BLDGS121105529 Job Number
E50608184440 Scan Code

30" x 42" Anti El. SHEET SIZE

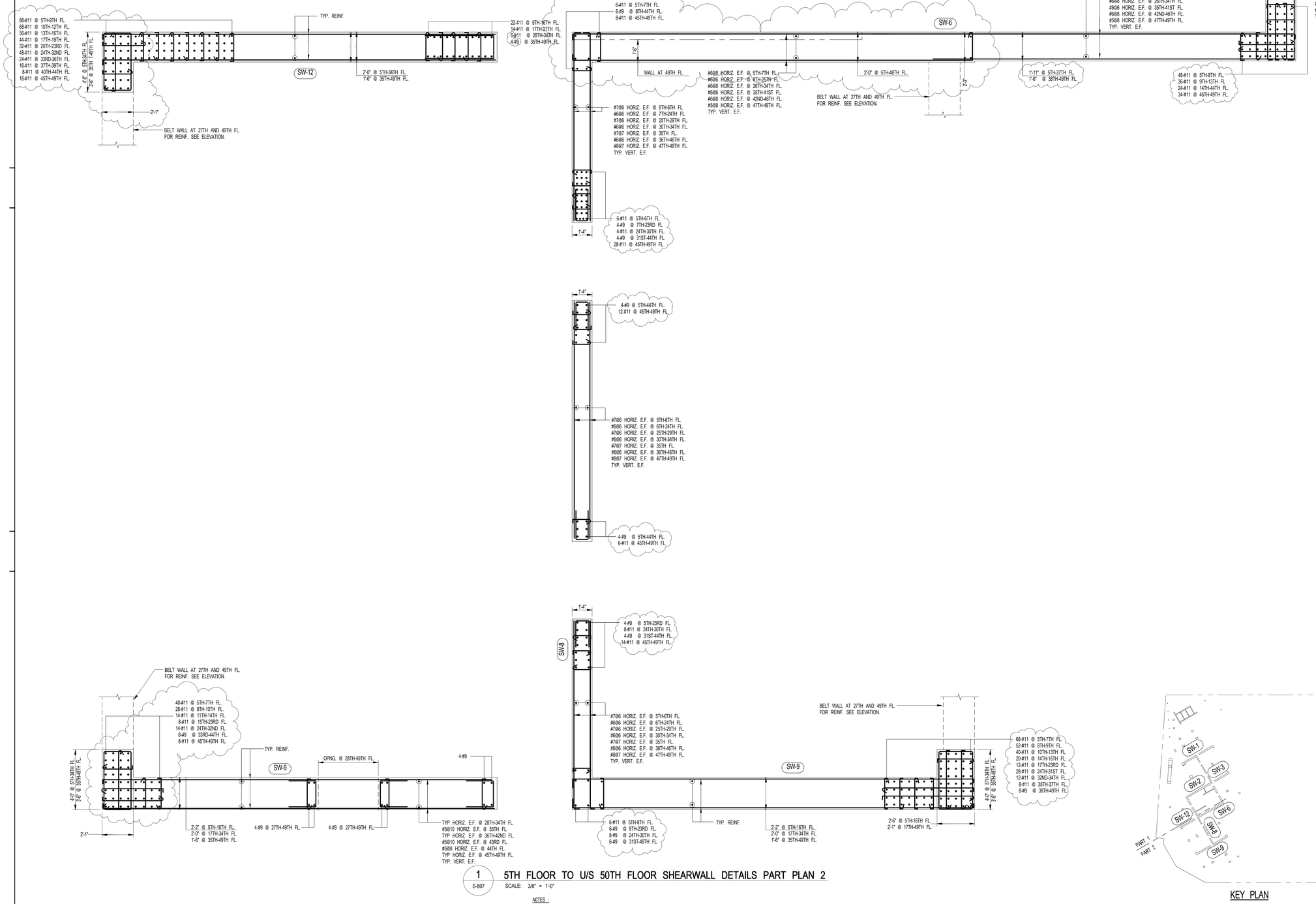

1 S-807 — 5TH FLOOR TO U/S 50TH FLOOR SHEARWALL DETAILS PART PLAN 2

SCALE: 3/8" = 1'-0"

KEY PLAN

NOTES :

1. FOR NOTES SEE DRAWING S-940

KEY PLAN:

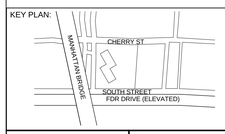

PROJECT NORTH

TRUE NORTH

DEVELOPER:
EXTELL DEVELOPMENT COMPANY
805 Third Ave, 7th Floor
New York, NY 10022
TEL: 212-712-6000 FAX: 212-712-6100

ARCHITECT OF RECORD:
AAI ARCHITECTS, P.C.
14 Wall Street, 2nd Floor
New York, NY 10005
TEL: 212-964-4040 FAX: 212-964-4090

INTERIOR DESIGNER:
MEYER DAVIS
180 Varick St, suite 404
New York, NY 10014
TEL: 212-627-5574

LANDSCAPE DESIGNER:
WEST 8 URBAN DESIGN & LANDSCAPE ARCHITECTURE P.C.
333 Hudson Street, Suite 905
New York, NY 10013
TEL: 212-285-0088 FAX: 212-285-0228

STRUCTURAL ENGINEERS:
WSP
228 East 45th Street
New York, NY 10017
TEL: 212-687-9888 FAX: 646-487-5501

MEP ENGINEERS:
ICOR ASSOCIATES, LLC
485 C Route 1 South, Suite 200
Iselin, NJ 08830
TEL: 908-272-3300 FAX: 908-272-4440

GEOTECHNICAL ENGINEERS:
LANGAN ENGINEERING & ENVIRONMENTAL SERVICES
21 Penn Plaza - 360 West 31st Street, 8th Floor
New York, NY 10001
TEL: 212.479.5400 FAX: 212.479.5444

No.	DESCRIPTION:	DATE:
	CONCRETE BID PACKAGE	03-06-15
	50% CONSTRUCTION DOCUMENTS	04-08-15
	ISSUED FOR FILING	07-28-15
	80% CONSTRUCTION DOCUMENTS	08-14-15
	ISSUE FOR CONSTRUCTION	03-18-16
1	ASI #80	12-09-16
2	ASI #82	01-16-17
3	ASI #85	03-01-17
	ISSUED FOR FILING	05-22-17

Discrepancies must be reported immediately to the Architect before proceeding. Only figured dimensions are to be used. Contractors must check all dimensions on site. This drawing is protected by copyright.

ALL DIMENSIONS ARE SHOWN IN IMPERIAL.

CONSULTANT:
WSP

PROJECT:
252 SOUTH STREET
NEW YORK, NY

DRAWING TITLE:
5TH FLOOR TO U/S 50TH FLOOR SHEARWALL DETAILS

SEAL & SIGNATURE:
STATE OF NEW YORK — AHMAD RAHIMIAN — No. 086927 — LICENSED PROFESSIONAL ENGINEER

DATE: 03/05/15
PROJECT No: 1302510
DRAWN: CAD REV:
CHK: CL
SCALE: As indicated
DWG No: **S-807.02**
DOB PAGE No: of

DOB EMPLOYEE STAMP:
Tina Mathew, RA
APPROVED
Under Directive 2 of 1975
AMENDED APPLICATION
Date: 10/23/2017
NYC Development Hub

DOB B-SCAN:

FILE NAME:
PLOT DATE:

DEPT OF BLDGS121105028 Job Number
ES404222313 Scan Code

30" x 42" Arch E1 SHEET SIZE

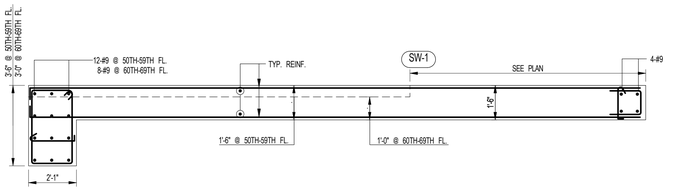

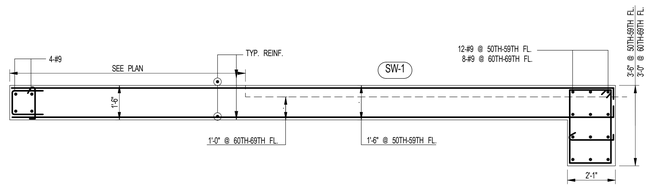

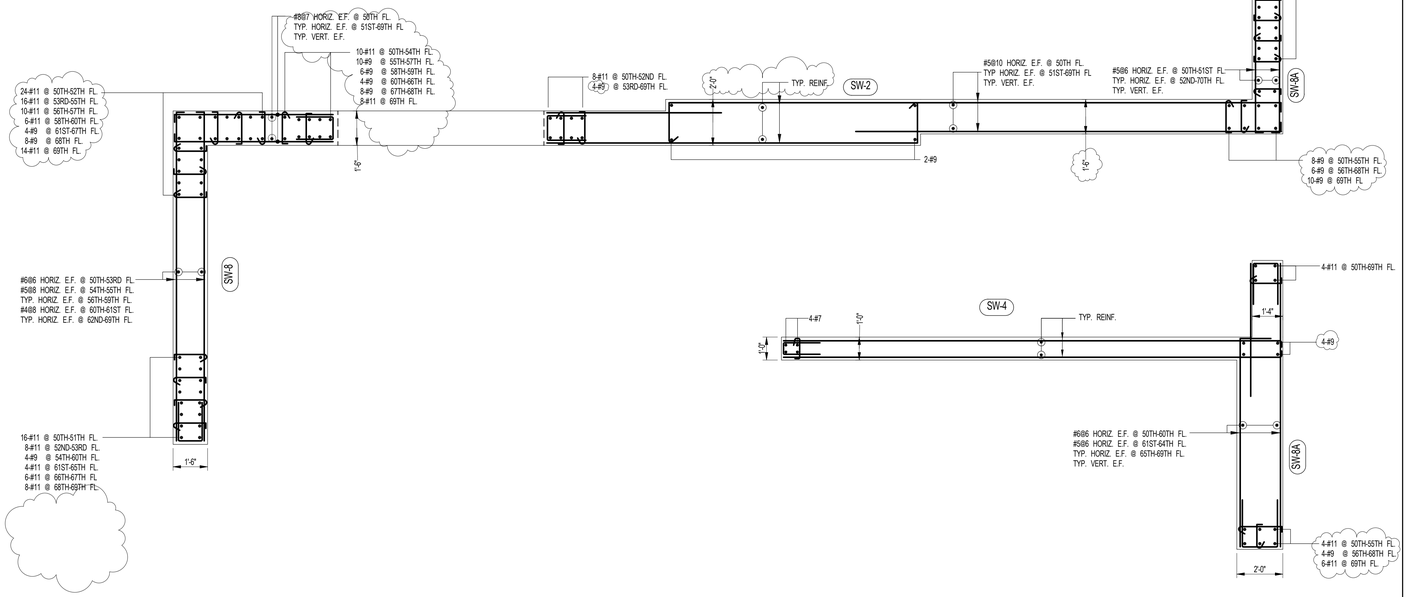

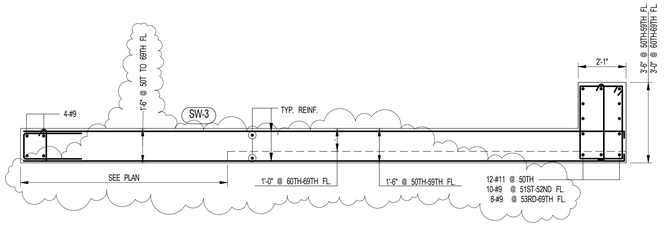

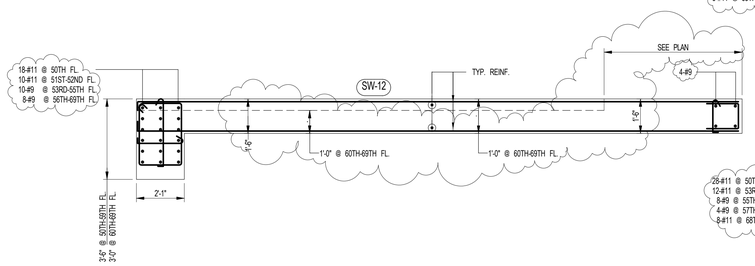

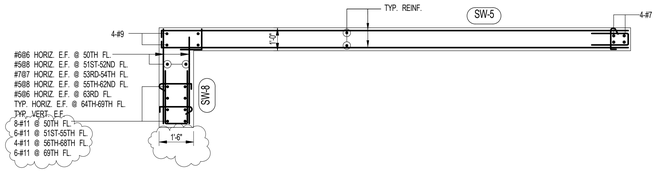

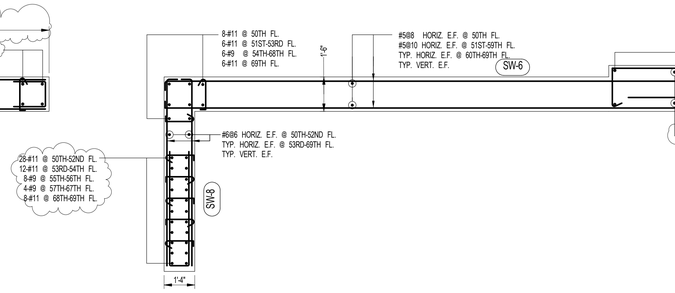

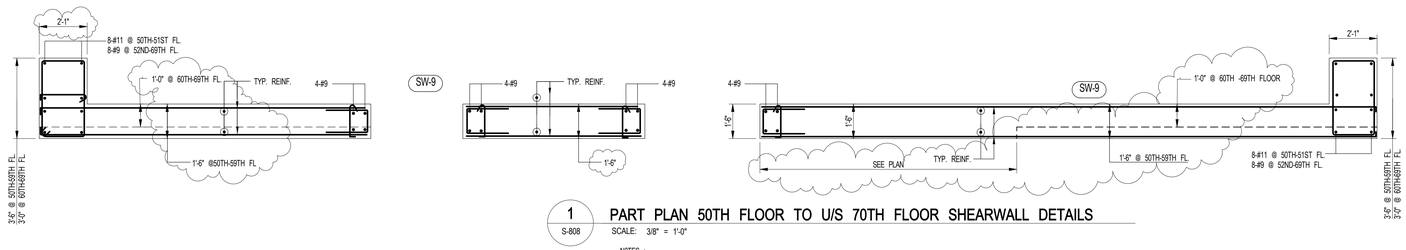

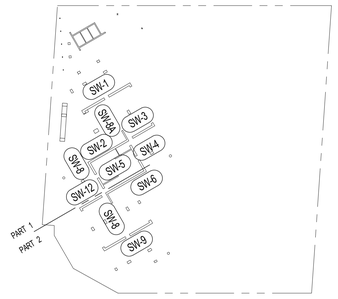

KEY PLAN

1 S-808 PART PLAN 50TH FLOOR TO U/S 70TH FLOOR SHEARWALL DETAILS

SCALE: 3/8" = 1'-0"

NOTES :

1. FOR NOTES SEE DRAWING S-940

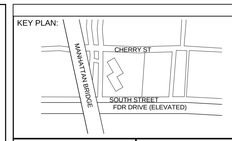

PROJECT NORTH

TRUE NORTH

DEVELOPER:
EXTELL DEVELOPMENT COMPANY
805 Third Ave, 7th Floor
New York, NY 10022
TEL: 212-712-6000 FAX: 212-712-6100

ARCHITECT OF RECORD:
AAI ARCHITECTS, P.C.
14 Wall Street, 2nd Floor
New York, NY 10005
TEL: 212-964-4040 FAX: 212-964-4090

INTERIOR DESIGNER:
MEYER DAVIS
180 Varick St, suite 404
New York, NY 10014
TEL: 212-627-5574

LANDSCAPE DESIGNER:
WEST 8 URBAN DESIGN & LANDSCAPE ARCHITECTURE P.C.
333 Hudson Street, Suite 905
New York, NY 10013
TEL: 212-285-0088 FAX: 212-285-0228

STRUCTURAL ENGINEERS:
WSP
228 East 45th Street
New York, NY 10017
TEL: 212-687-9888 FAX: 646-487-5501

MEP ENGINEERS:
ICOR ASSOCIATES, LLC
485 C Route 1 South, Suite 200
Iseline, NJ 08830
TEL: 908-272-3300 FAX: 908-272-4440

GEOTECHNICAL ENGINEERS:
LANGAN ENGINEERING & ENVIRONMENTAL SERVICES
21 Penn Plaza - 360 West 31st Street, 8th Floor
New York, NY 10001
TEL: 212.479.5400 FAX: 212.479.5444

No.	DESCRIPTION:	DATE:
	CONCRETE BID PACKAGE	03-06-15
	ISSUED FOR FILING	07-28-15
	80% CONSTRUCTION DOCUMENTS	08-14-15
1	ASI #82	01-16-17
2	ASI #85	03-01-17
3	ASI #88	04-14-17
	ISSUED FOR FILING	05-22-17

Discrepancies must be reported immediately to the Architect before proceeding. Only figured dimensions are to be used. Contractors must check all dimensions on site. This drawing is protected by copyright.

ALL DIMENSIONS ARE SHOWN IN IMPERIAL.

CONSULTANT:
WSP

PROJECT:
252 SOUTH STREET
NEW YORK, NY

DRAWING TITLE:
50TH FLOOR TO U/S 70TH FLOOR SHEARWALL DETAILS

SEAL & SIGNATURE:
STATE OF NEW YORK AHMAD RAHIMIAN No. 085027 LICENSED PROFESSIONAL ENGINEER

DATE: 03/09/15
PROJECT No: 1302510
DRAWN: CAD REV:
CHK: CL
SCALE: As indicated
DWG No:
S-808.02
DOB PAGE No: of

DOB EMPLOYEE STAMP:
Tina Mathew, RA
APPROVED
Under Directive 2 of 1975
AMENDED APPLICATION
Date: 10/23/2017
NYC Development Hub

DOB B-SCAN:

FILE NAME:
PLOT DATE:

DEPT OF BLDGS121105539 Job Number
E-5489737808 Scan Code

30" x 42" Arch E1 SHEET SIZE

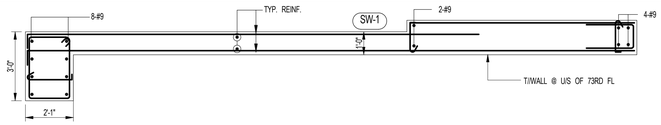

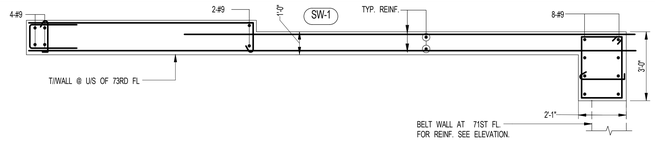

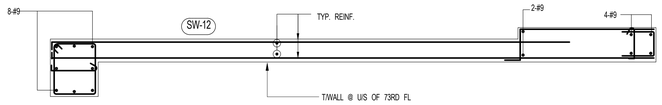

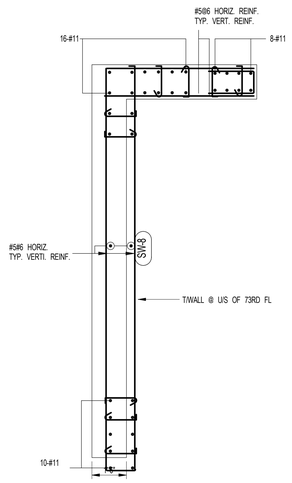

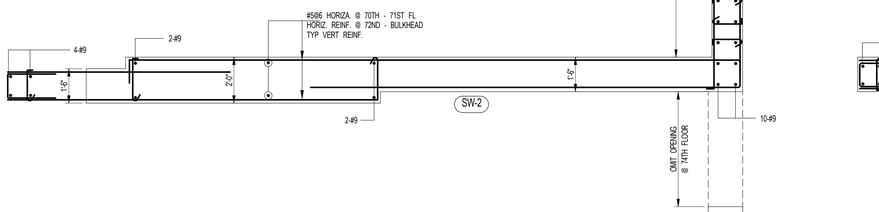

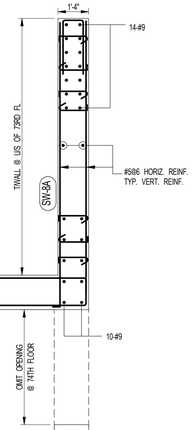

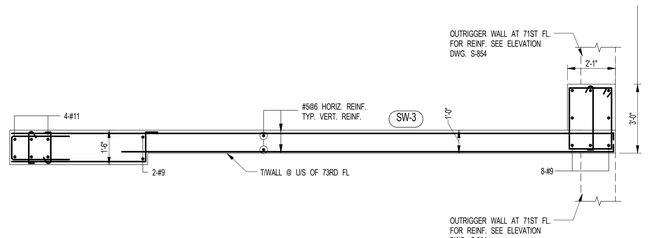

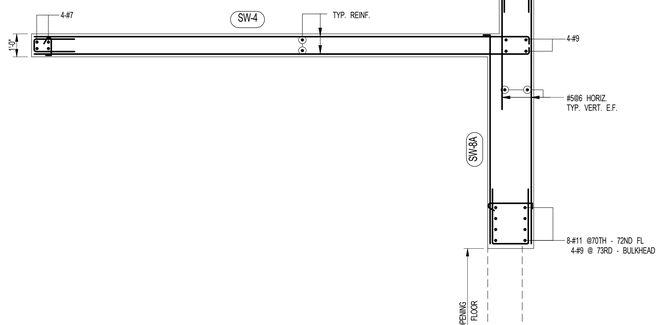

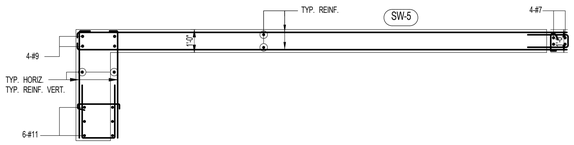

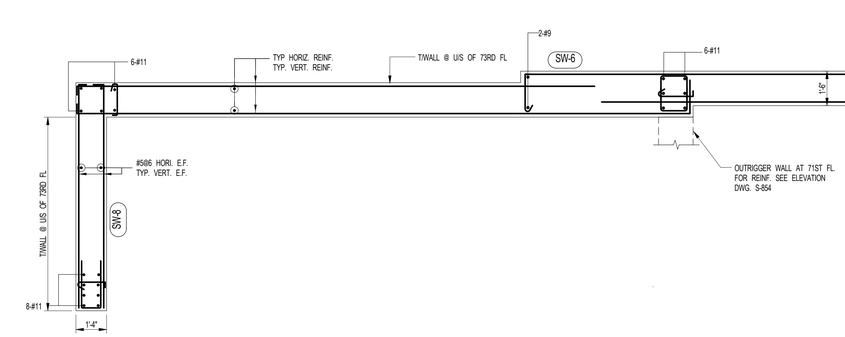

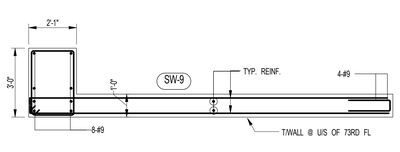

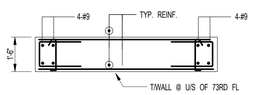

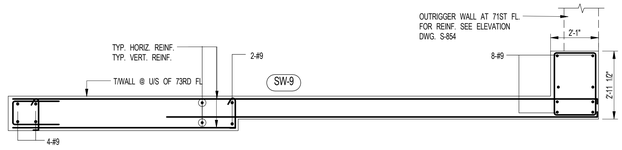

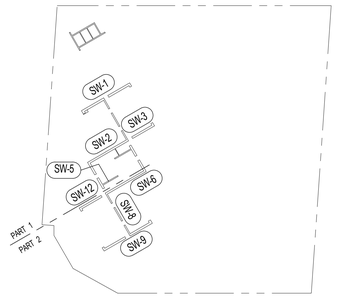

KEY PLAN

1 S-809 **70TH FLOOR TO ROOF SHEARWALL DETAILS**
SCALE: 3/8" = 1'-0"

KEY PLAN:

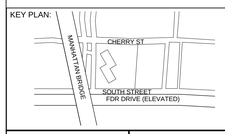

PROJECT NORTH

TRUE NORTH

DEVELOPER:
EXTELL DEVELOPMENT COMPANY
805 Third Ave, 7th Floor
New York, NY 10022
TEL: 212-712-6000 FAX: 212-712-6100

ARCHITECT OF RECORD:
AAI ARCHITECTS, P.C.
14 Wall Street, 2nd Floor
New York, NY 10005
TEL: 212-964-4040 FAX: 212-964-4090

INTERIOR DESIGNER:
MEYER DAVIS
180 Varick St, suite 404
New York, NY 10014
TEL: 212-627-5574

LANDSCAPE DESIGNER:
WEST 8 URBAN DESIGN & LANDSCAPE ARCHITECTURE P.C.
333 Hudson Street, Suite 905
New York, NY 10013
TEL: 212-285-0088 FAX: 212-285-0228

STRUCTURAL ENGINEERS:
WSP
228 East 45th Street
New York, NY 10017
TEL: 212-687-9888 FAX: 646-487-5501

MEP ENGINEERS:
ICOR ASSOCIATES, LLC
485 C Route 1 South, Suite 200
Iseline, NJ 08830
TEL: 908-272-3300 FAX: 908-272-4440

GEOTECHNICAL ENGINEERS:
LANGAN ENGINEERING & ENVIRONMENTAL SERVICES
21 Penn Plaza - 360 West 31st Street, 8th Floor
New York, NY 10001
TEL: 212.479.5400 FAX: 212.479.5444

No.	DESCRIPTION:	DATE:
	80% CONSTRUCTION DOCUMENTS	08-14-15
	ISSUED FOR FILING	05-22-17

Discrepancies must be reported immediately to the Architect before proceeding. Only figured dimensions are to be used. Contractors must check all dimensions on site. This drawing is protected by copyright.

ALL DIMENSIONS ARE SHOWN IN IMPERIAL.

CONSULTANT:
WSP

PROJECT:
252 SOUTH STREET
NEW YORK, NY

DRAWING TITLE:
70TH FLOOR TO ROOF
SHEARWALL DETAILS

SEAL & SIGNATURE:
STATE OF NEW YORK · AHMAD RAHIMIAN · No. 085052 · LICENSED PROFESSIONAL ENGINEER

DATE: 08/12/15
PROJECT No: 1302510
DRAWN: CAD REV:
CHK: CL
SCALE: As indicated
DWG No: **S-809.00**
DOB PAGE No: of

DOB EMPLOYEE STAMP:
Tina Mathew, RA
APPROVED
Under Directive 2 of 1975
AMENDED APPLICATION
Date: 10/23/2017
NYC Development Hub

DOB B-SCAN:

FILE NAME:
PLOT DATE:

DEPT OF BLDGS121185529 Job Number
E360114951z2 Scan Code

30" x 42" Arch E1 SHEET SIZE

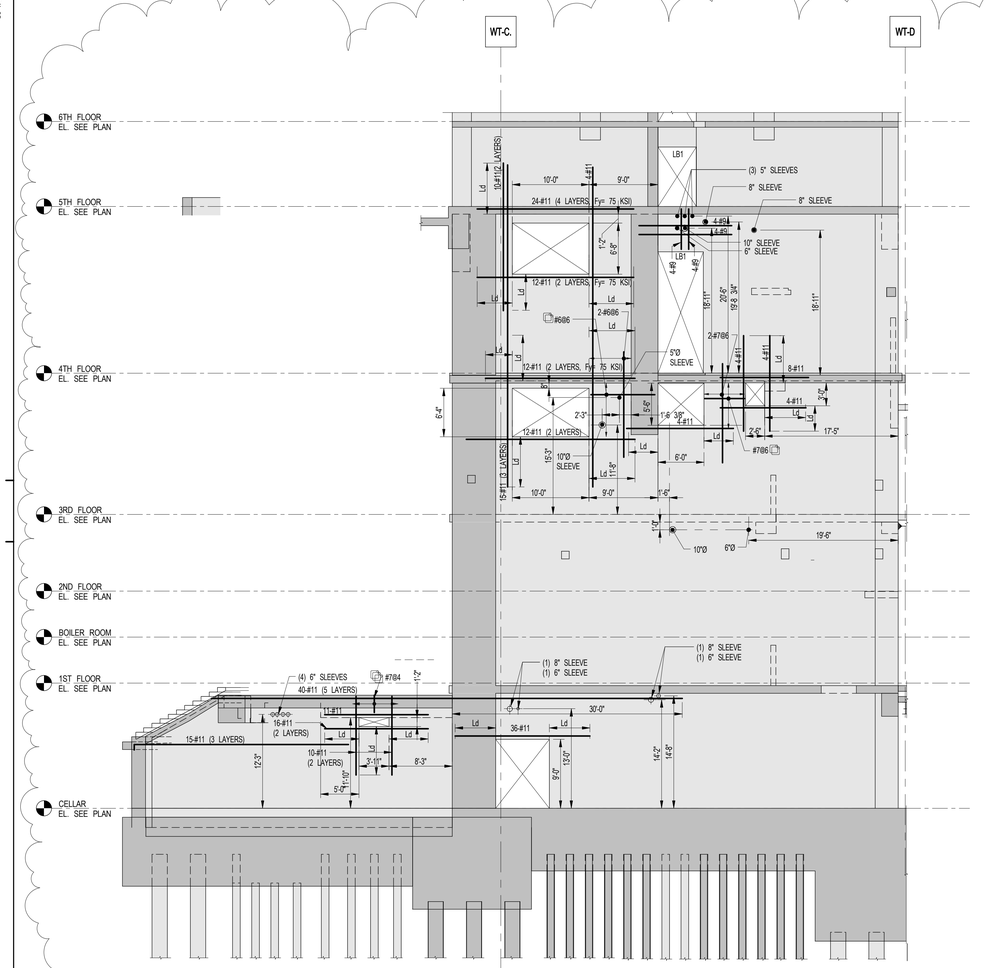

1 S-840 SW-1 ELEVATION- CELLAR - U/S OF 6TH FLOOR
SCALE: 1/8" = 1'-0"

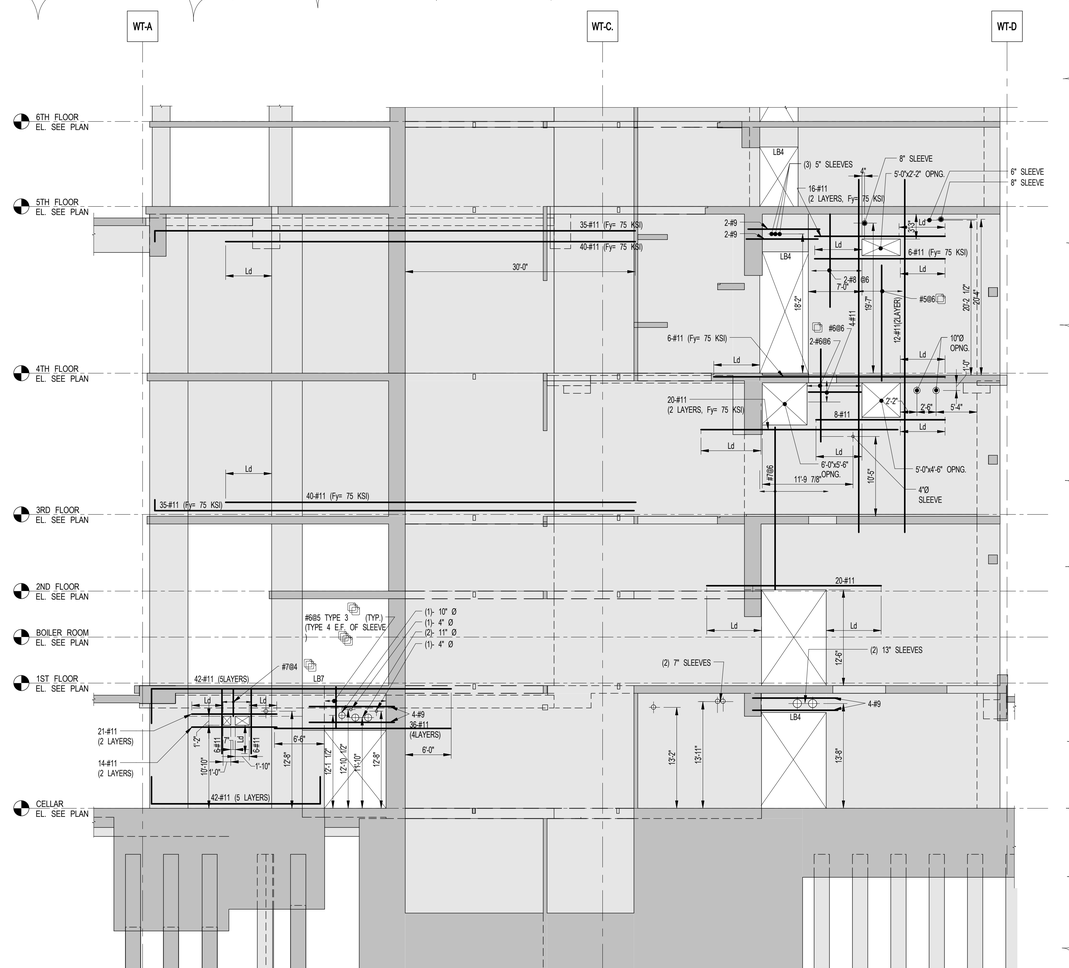

2 S-840 SW-10, SW-2 & SW-3 ELEVATION- CELLAR - U/S OF 6TH FLOOR
SCALE: 1/8" = 1'-0"

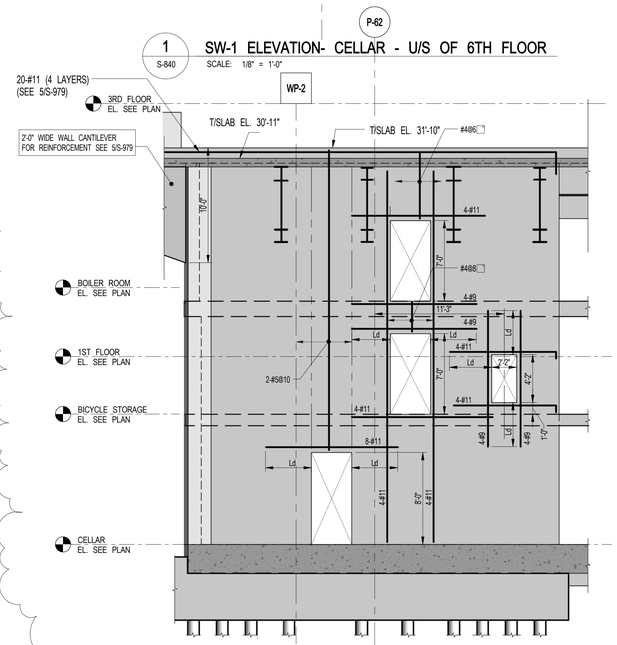

3 S-840 SW-24 ELEVATION- CELLAR - U/S OF 3RD FLOOR
SCALE: 3/16" = 1'-0"

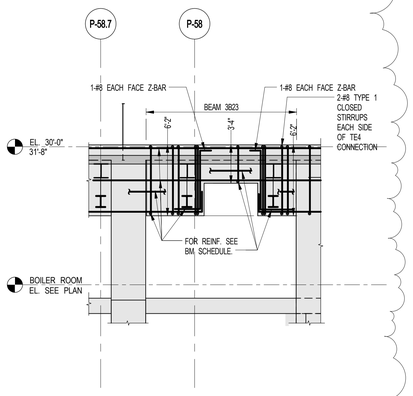

4 S-840 ELEVATION 3B23
SCALE: 3/16" = 1'-0"

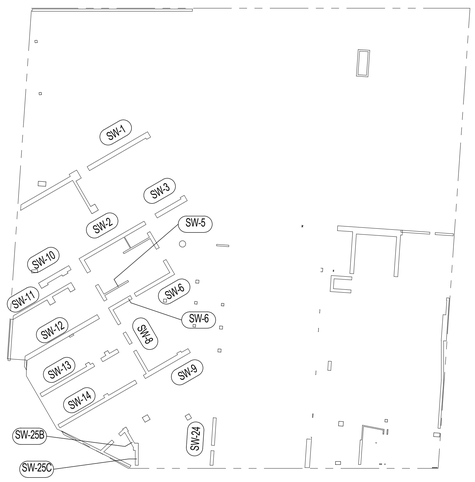

KEY PLAN

FILE NAME:
PLOT DATE:

KEY PLAN:

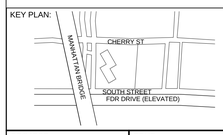

PROJECT NORTH

TRUE NORTH

DEVELOPER:
EXTELL DEVELOPMENT COMPANY
805 Third Ave, 7th Floor
New York, NY 10022
TEL: 212-712-6000 FAX: 212-712-6100

ARCHITECT OF RECORD:
AAI ARCHITECTS, P.C.
14 Wall Street, 2nd Floor
New York, NY 10005
TEL: 212-964-4040 FAX: 212-964-4090

INTERIOR DESIGNER:
MEYER DAVIS
180 Varick St, suite 404
New York, NY 10014
TEL: 212-627-5574

LANDSCAPE DESIGNER:
WEST 8 URBAN DESIGN & LANDSCAPE ARCHITECTURE P.C.
333 Hudson Street, Suite 905
New York, NY 10013
TEL: 212-285-0088 FAX: 212-285-0228

STRUCTURAL ENGINEERS:
WSP
228 East 45th Street
New York, NY 10017
TEL: 212-687-9888 FAX: 646-487-5501

MEP ENGINEERS:
ICOR ASSOCIATES, LLC
485 C Route 1 South, Suite 200
Iselin, NJ 08830
TEL: 908-272-3300 FAX: 908-272-4440

GEOTECHNICAL ENGINEERS:
LANGAN ENGINEERING & ENVIRONMENTAL SERVICES
21 Penn Plaza - 360 West 31st Street, 8th Floor
New York, NY 10001
TEL: 212.479.5400 FAX: 212.479.5444

No.	DESCRIPTION:	DATE:
	50% CONSTRUCTION DOCUMENTS	04-08-15
	ISSUED FOR FILING	07-28-15
	80% CONSTRUCTION DOCUMENTS	08-14-15
	ADDENDUM #15	11-18-15
	90% CONSTRUCTION DOCUMENTS	01-15-16
	ADDENDUM #16	02-04-16
	ASI #56	02-19-16
	ASI #57	02-26-16
	ASI#59	03-11-16
	ISSUE FOR CONSTRUCTION	03-18-16
1	ASI#61	04-22-16
2	ASI #63	05-06-16
3	ASI #64	05-13-16
	ISSUED FOR FILING	05-22-17

Discrepancies must be reported immediately to the Architect before proceeding. Only figured dimensions are to be used. Contractors must check all dimensions on site. This drawing is protected by copyright.

ALL DIMENSIONS ARE SHOWN IN IMPERIAL.

CONSULTANT:
WSP

PROJECT:
252 SOUTH STREET
NEW YORK, NY

DRAWING TITLE:
SHEARWALL ELEVATIONS 1
FROM CELLAR-U/S OF 6TH FLOOR

SEAL & SIGNATURE:
STATE OF NEW YORK · ARMAD RANDJBAR · No. 065057 · LICENSED PROFESSIONAL ENGINEER

DATE:	04/06/15
PROJECT No:	1302510
DRAWN: CAD	REV:
CHK: CL	
SCALE: As indicated	
DWG No:	**S-840.01**
DOB PAGE No:	of

DOB EMPLOYEE STAMP:
Tina Mathew, RA
APPROVED
Under Directive 2 of 1975
AMENDED APPLICATION
Date: 10/23/2017
NYC Development Hub

DOB B-SCAN:

DEPT OF BLDGS121805628 Job Number
E-S3852180623 Scan Code
30" x 42" Arch E1 SHEET SIZE

1 S-841 SW-6 & SW-12 ELEVATION- CELLAR - U/S OF 6TH FLOOR
SCALE: 1/8" = 1'-0"

3 S-841 SW-9 & SW-14 ELEVATION CELLAR - U/S OF 6TH FLOOR
SCALE: 1/8" = 1'-0"

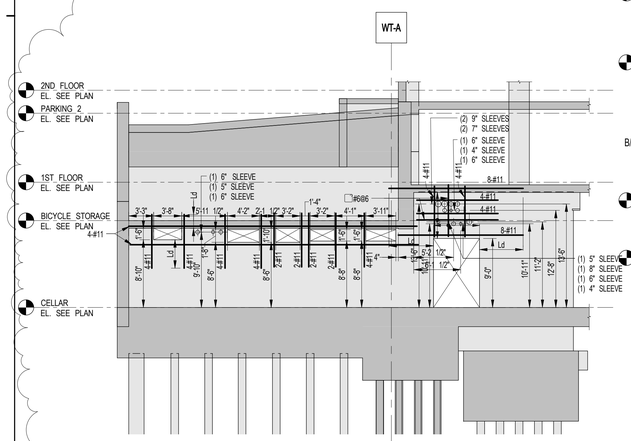

4 S-841 SW-13 ELEVATION CELLAR - U/S OF 1ST FLOOR
SCALE: 1/8" = 1'-0"

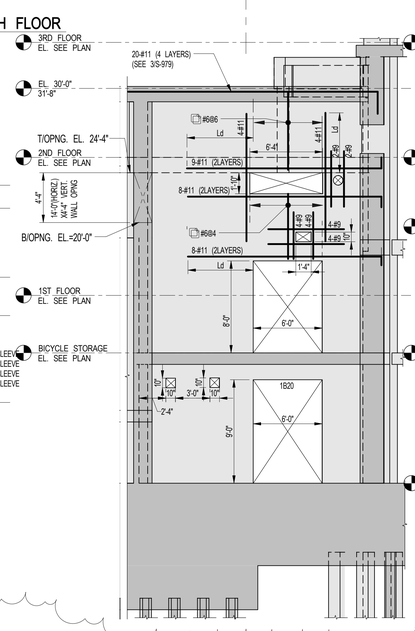

5 S-841 SW-25A ELEVATION CELLAR-U/S OF 3RD FLOOR
SCALE: 3/16" = 1'-0"

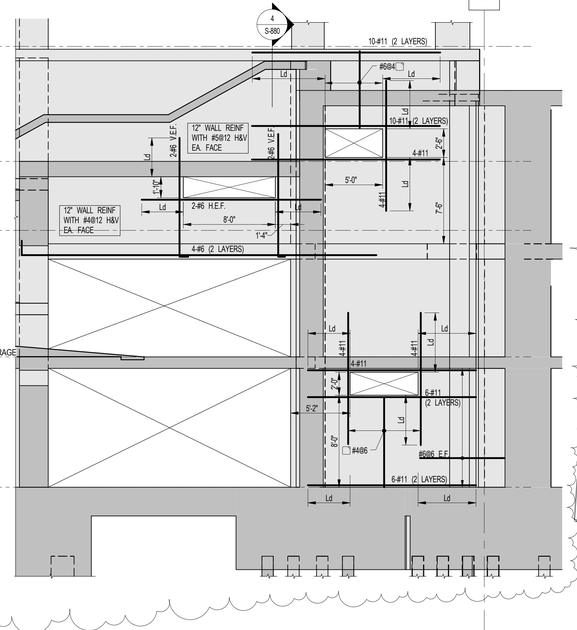

6 S-841 SW-25B-ELEVATION-CELLAR-U/S 3RD FLOOR
SCALE: 3/16" = 1'-0"

KEY PLAN

FILE NAME:
PLOT DATE:

KEY PLAN:
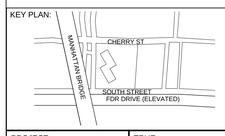

PROJECT NORTH | TRUE NORTH

DEVELOPER:
EXTELL DEVELOPMENT COMPANY
805 Third Ave, 7th Floor
New York, NY 10022
TEL: 212-712-6000 FAX: 212-712-6100

ARCHITECT OF RECORD:
AAI ARCHITECTS, P.C.
14 Wall Street, 2nd Floor
New York, NY 10005
TEL: 212-964-4040 FAX: 212-964-4090

INTERIOR DESIGNER:
MEYER DAVIS
180 Varick St, suite 404
New York, NY 10014
TEL: 212-627-5574

LANDSCAPE DESIGNER:
WEST 8 URBAN DESIGN & LANDSCAPE ARCHITECTURE P.C.
333 Hudson Street, Suite 905
New York, NY 10013
TEL: 212-285-0088 FAX: 212-285-0228

STRUCTURAL ENGINEERS:
WSP
228 East 45th Street
New York, NY 10017
TEL: 212-687-9888 FAX: 646-487-5501

MEP ENGINEERS:
ICOR ASSOCIATES, LLC
485 C Route 1 South, Suite 200
Iselin, NJ 08830
TEL: 908-272-3300 FAX: 908-272-4440

GEOTECHNICAL ENGINEERS:
LANGAN ENGINEERING & ENVIRONMENTAL SERVICES
21 Penn Plaza - 360 West 31st Street, 8th Floor
New York, NY 10001
TEL: 212.479.5400 FAX: 212.479.5444

No.	DESCRIPTION:	DATE:
	50% CONSTRUCTION DOCUMENTS	04-08-15
	ISSUED FOR FILING	07-28-15
	80% CONSTRUCTION DOCUMENTS	08-14-15
	ADDENDUM #15	11-18-15
	90% CONSTRUCTION DOCUMENTS	01-15-16
	ADDENDUM #16	02-04-16
	ASI #55	02-12-16
	ASI #56	02-19-16
	ASI#59	03-11-16
	ISSUE FOR CONSTRUCTION	03-18-16
1	ASI#61	04-22-16
2	ASI #64	05-13-16
	ISSUED FOR FILING	05-22-17

Discrepancies must be reported immediately to the Architect before proceeding. Only figured dimensions are to be used. Contractors must check all dimensions on site. This drawing is protected by copyright.

ALL DIMENSIONS ARE SHOWN IN IMPERIAL.

CONSULTANT:
WSP

PROJECT:
252 SOUTH STREET
NEW YORK, NY

DRAWING TITLE:
SHEARWALL ELEVATION 2
FROM CELLAR-U/S OF 6TH FLOOR

SEAL & SIGNATURE:
STATE OF NEW YORK · AHMAD RAHIMIAN · No. 065502 · LICENSED PROFESSIONAL ENGINEER

DATE:	04/06/15
PROJECT No:	1302510
DRAWN: CAD	REV:
CHK: CL	
SCALE: As indicated	
DWG No:	S-841.01
DOB PAGE No:	of

DOB EMPLOYEE STAMP:
Tina Mathew, RA
APPROVED
Under Directive 2 of 1975
AMENDED APPLICATION
Date: 10/23/2017
NYC Development Hub

DOB B-SCAN:

DEPT OF BLDGS 121805639 Job Number
E-591210780615 Scan Code
30" x 42" Arch E1 SHEET SIZE

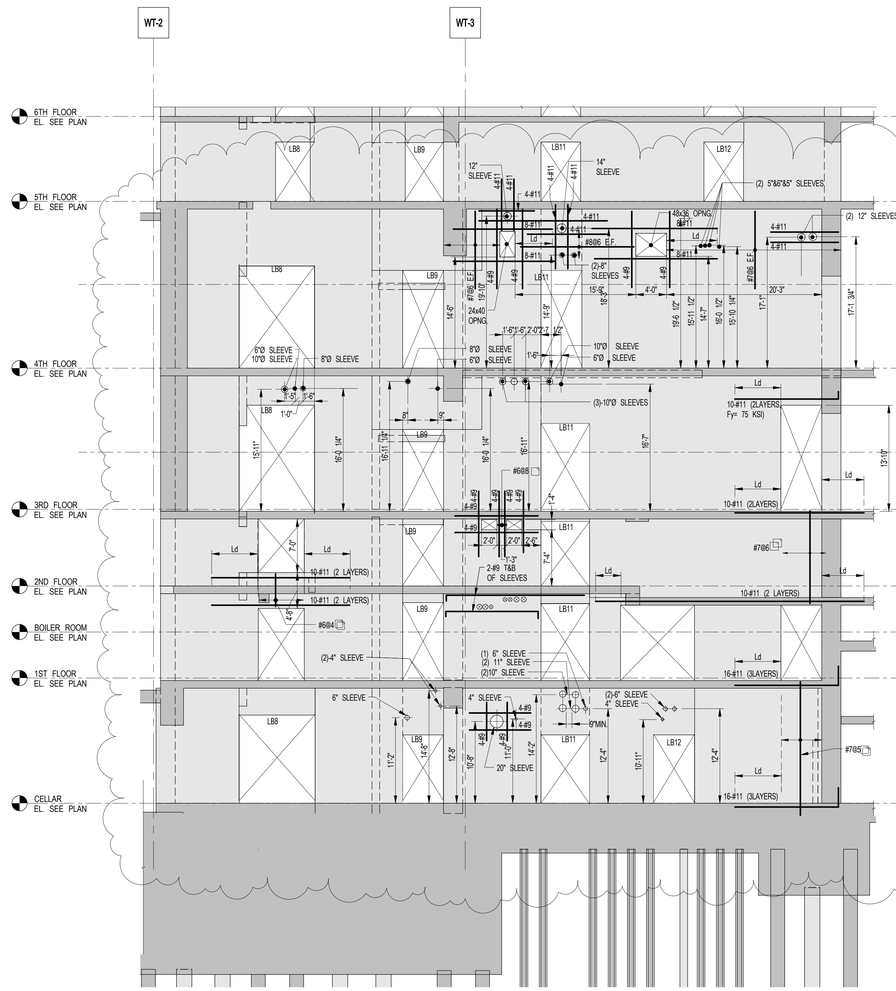

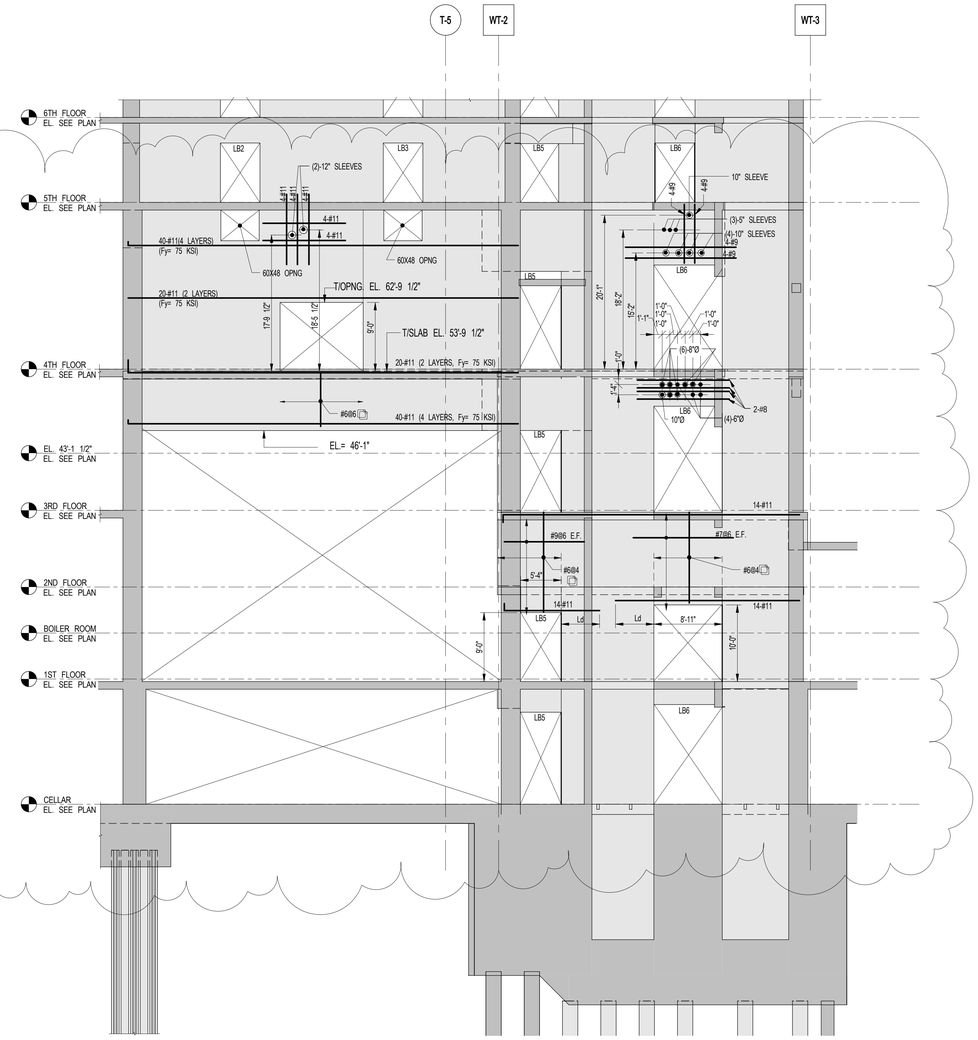

1 S-842 **SW-8 ELEVATION CELLAR - U/S OF 6TH FLOOR**
SCALE: 1/8" = 1'-0"

2 S-842 **SW-8A ELEVATION CELLAR - U/S OF 6TH FLOOR**
SCALE: 1/8" = 1'-0"

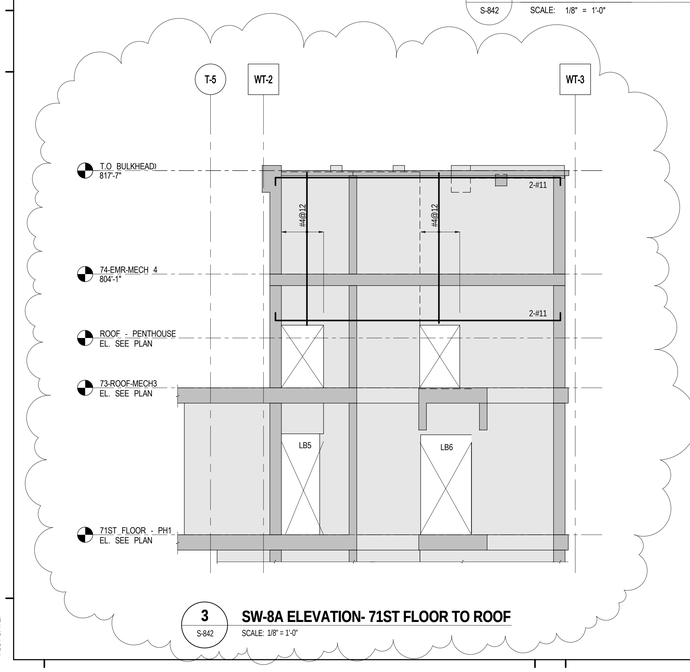

3 S-842 **SW-8A ELEVATION- 71ST FLOOR TO ROOF**
SCALE: 1/8" = 1'-0"

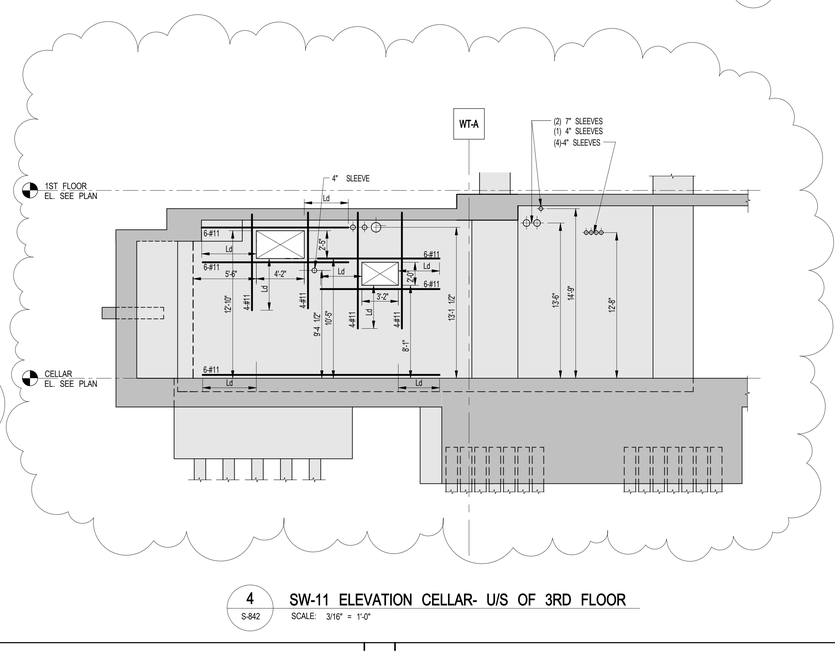

4 S-842 **SW-11 ELEVATION CELLAR- U/S OF 3RD FLOOR**
SCALE: 3/16" = 1'-0"

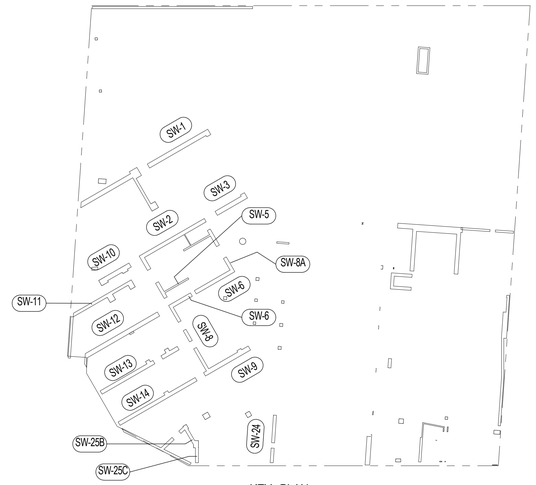

KEY PLAN

FILE NAME:
PLOT DATE:

KEY PLAN:

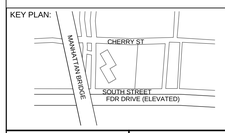

PROJECT NORTH

TRUE NORTH

DEVELOPER:
EXTELL DEVELOPMENT COMPANY
805 Third Ave, 7th Floor
New York, NY 10022
TEL: 212-712-6000 FAX: 212-712-6100

ARCHITECT OF RECORD:
AAI ARCHITECTS, P.C.
14 Wall Street, 2nd Floor
New York, NY 10005
TEL: 212-964-4040 FAX: 212-964-4090

INTERIOR DESIGNER:
MEYER DAVIS
180 Varick St, suite 404
New York, NY 10014
TEL: 212-627-5574

LANDSCAPE DESIGNER:
WEST 8 URBAN DESIGN & LANDSCAPE ARCHITECTURE P.C.
333 Hudson Street, Suite 905
New York, NY 10013
TEL: 212-285-0088 FAX: 212-285-0228

STRUCTURAL ENGINEERS:
WSP
228 East 45th Street
New York, NY 10017
TEL: 212-687-9888 FAX: 646-487-5501

MEP ENGINEERS:
ICOR ASSOCIATES, LLC
485 C Route 1 South, Suite 200
Iseline, NJ 08830
TEL: 908-272-3300 FAX: 908-272-4440

GEOTECHNICAL ENGINEERS:
LANGAN ENGINEERING & ENVIRONMENTAL SERVICES
21 Penn Plaza - 360 West 31st Street, 8th Floor
New York, NY 10001
TEL: 212.479.5400 FAX: 212.479.5444

No.	DESCRIPTION:	DATE:
	50% CONSTRUCTION DOCUMENTS	04-08-15
	ISSUED FOR FILING	07-28-15
	80% CONSTRUCTION DOCUMENTS	08-14-15
	ADDENDUM #15	11-18-15
	90% CONSTRUCTION DOCUMENTS	01-15-16
	ADDENDUM #16	02-04-16
	ASI #56	02-19-16
	ISSUE FOR CONSTRUCTION	03-18-16
1	ASI#61	04-22-16
2	ASI #62	04-29-16
3	ASI #63	05-06-16
4	ASI #64	05-13-16
5	ISSUED FOR FILING	05-22-17

Discrepancies must be reported immediately to the Architect before proceeding. Only figured dimensions are to be used. Contractors must check all dimensions on site. This drawing is protected by copyright.

ALL DIMENSIONS ARE SHOWN IN IMPERIAL.

CONSULTANT:
WSP

PROJECT:
252 SOUTH STREET
NEW YORK, NY

DRAWING TITLE:
SHEARWALL ELEVATION 3
FROM CELLAR-U/S OF 6TH FLOOR

SEAL & SIGNATURE:
STATE OF NEW YORK ANDREW RAMIREZ No. 085057 LICENSED PROFESSIONAL ENGINEER

DATE: 04/08/15
PROJECT No: 1302510
DRAWN: CAD REV:
CHK: CL
SCALE: As indicated
DWG No:
S-842.01
DOB PAGE No: of

DOB EMPLOYEE STAMP:
Tina Mathew, RA
Building Code
APPROVED
Under Directive 2 of 1975
AMENDED APPLICATION
Date: 10/23/2017
NYC Development Hub

DOB B-SCAN:

DEPT OF BLDGS 121185528 Job Number
ES5526411041 Scan Code

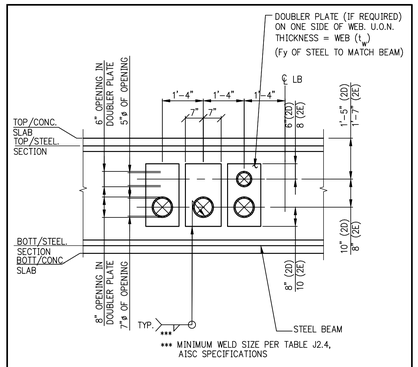

STEEL LINK BEAM WEB OPENING TYPE 2D & 2E

KEY PLAN:

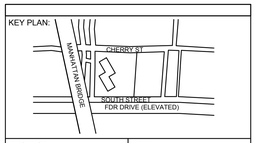

PROJECT NORTH

TRUE NORTH

DEVELOPER:
EXTELL DEVELOPMENT COMPANY
805 Third Ave, 7th Floor
New York, NY 10022
TEL: 212-712-6000 FAX: 212-712-6100

ARCHITECT OF RECORD:
AAI ARCHITECTS, P.C.
14 Wall Street, 2nd Floor
New York, NY 10005
TEL: 212-964-4040 FAX: 212-964-4090

INTERIOR DESIGNER:
MEYER DAVIS
180 Varick St, suite 404
New York, NY 10014
TEL: 212-627-5574

LANDSCAPE DESIGNER:
WEST 8 URBAN DESIGN & LANDSCAPE ARCHITECTURE P.C.
333 Hudson Street, Suite 905
New York, NY 10013
TEL: 212-285-0088 FAX: 212-285-0228

STRUCTURAL ENGINEERS:
WSP
228 East 45th Street
New York, NY 10017
TEL: 212-687-9888 FAX: 646-487-5501

MEP ENGINEERS:
ICOR ASSOCIATES, LLC
485 C Route 1 South, Suite 200
Iseline, NJ 08830
TEL: 908-272-3300 FAX: 908-272-4440

GEOTECHNICAL ENGINEERS:
LANGAN ENGINEERING & ENVIRONMENTAL SERVICES
21 Penn Plaza - 360 West 31st Street, 8th Floor
New York, NY 10001
TEL: 212.479.5400 FAX: 212.479.5444

No.	DESCRIPTION:	DATE:
1.	ASI #88	04-14-17
	ISSUED FOR FILING	05-22-17

Discrepancies must be reported immediately to the Architect before proceeding. Only figured dimensions are to be used. Contractors must check all dimensions on site. This drawing is protected by copyright.

ALL DIMENSIONS ARE SHOWN IN IMPERIAL.

CONSULTANT:
WSP

PROJECT:
252 SOUTH STREET
NEW YORK, NY

DRAWING TITLE:
TYPICAL SHEARWALL DETAILS 2

SEAL & SIGNATURE:

DATE:	07/25/14
PROJECT No:	1302510
DRAWN: CADD	REV:
CHK: CL	
SCALE: N.T.S.	
DWG No:	S-848.00
DOB PAGE No:	of

DOB EMPLOYEE STAMP:

DOB B-SCAN:

30" x 42" Arch E1 - SHEET SIZE
FILE NAME:
PLOT DATE:

DEPT OF BLDGS 121185528 Job Number
ES195064471 Scan Code

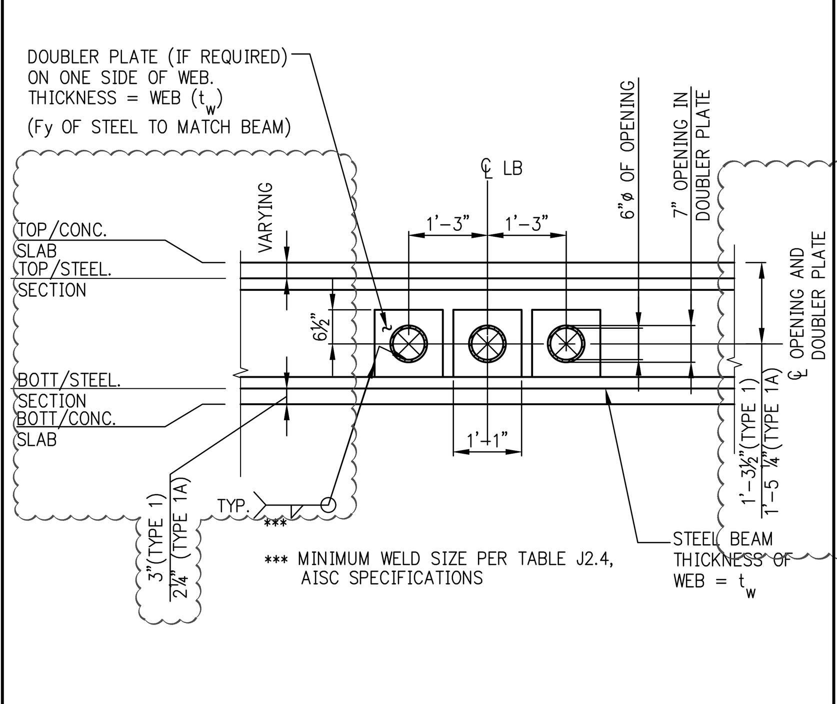

STEEL LINK BEAM WEB OPENING TYPE 1 & 1A

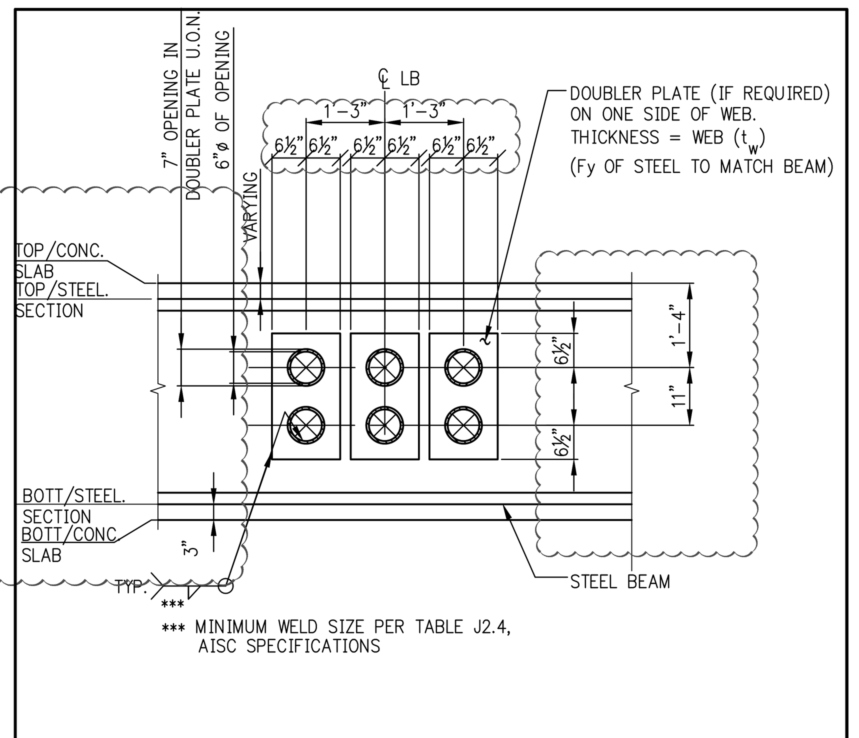

STEEL LINK BEAM WEB OPENING TYPE 2

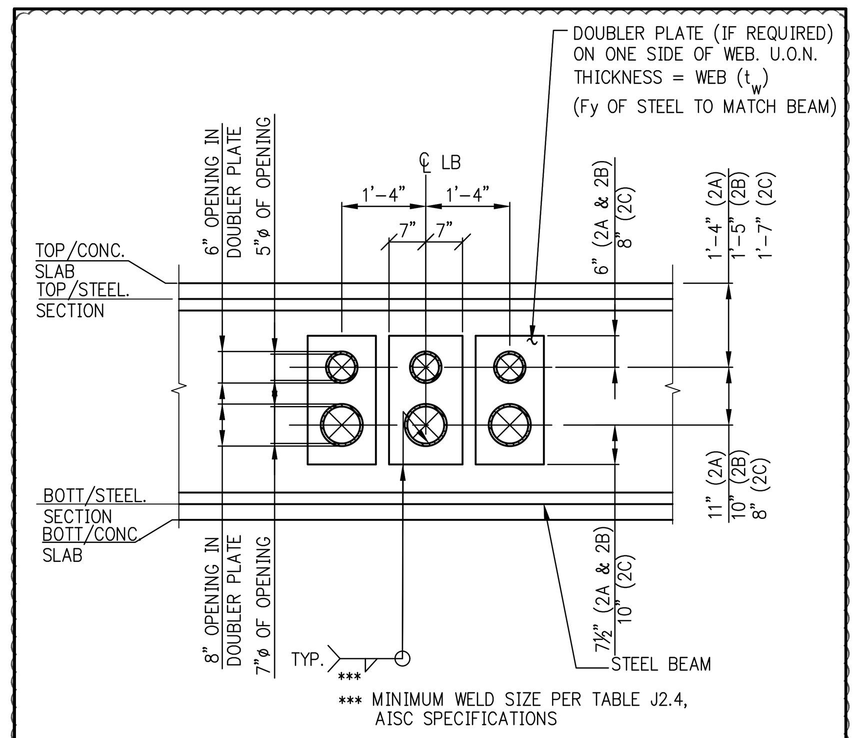

STEEL LINK BEAM WEB OPENING TYPE 2A & 2B & 2C

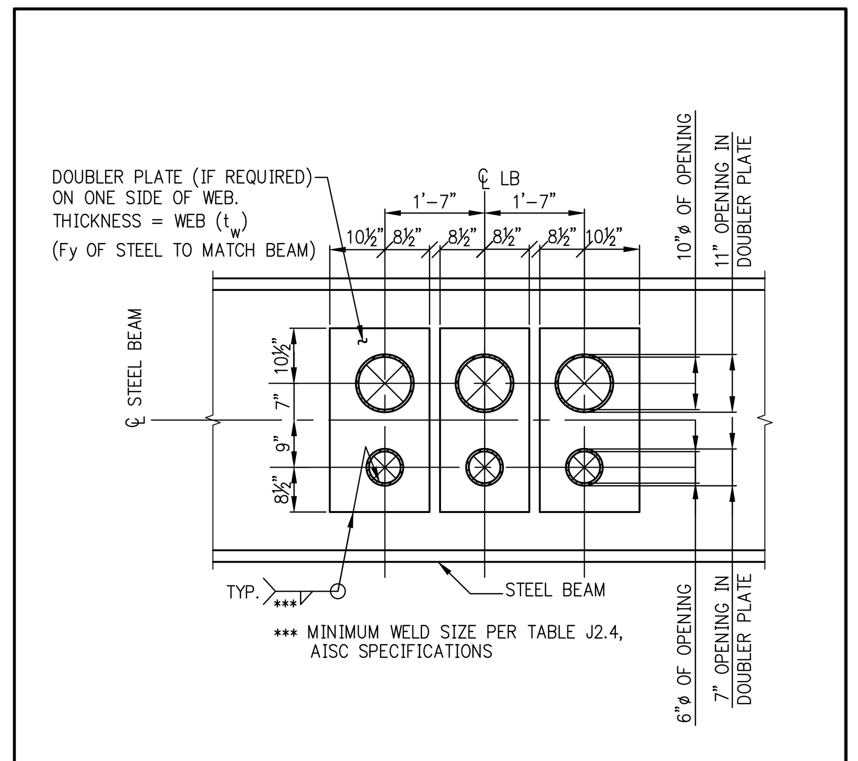

STEEL LINK BEAM WEB OPENING TYPE 3

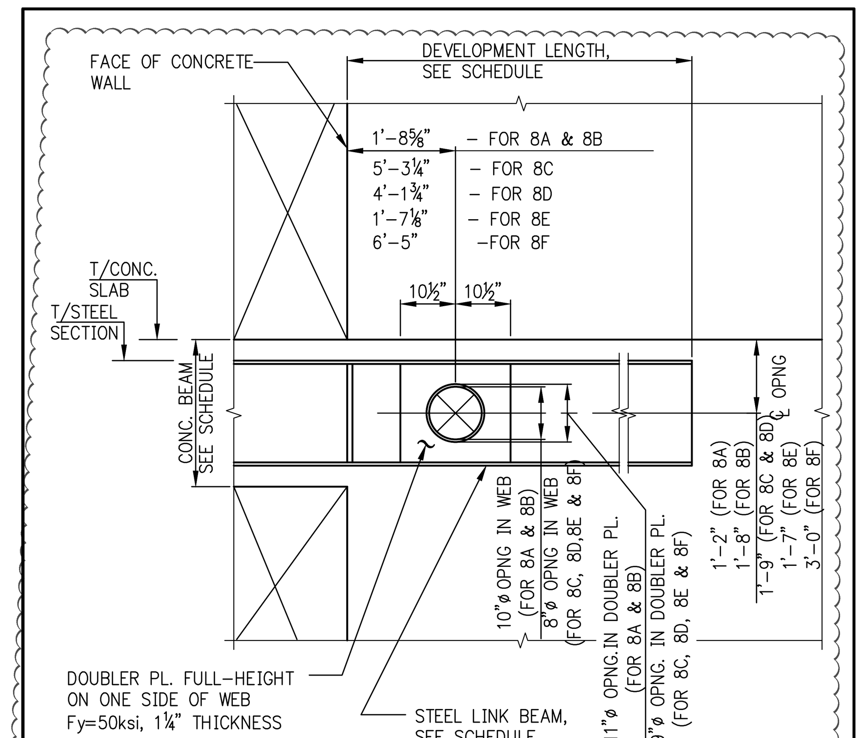

STEEL LINK BEAM WEB OPENING TYPE 8A, 8B, 8C, 8D, 8E & 8F

NOTE:
FOR BALANCE OF INFORMATION SEE TYP. DETAILS ON THIS DRAWING.

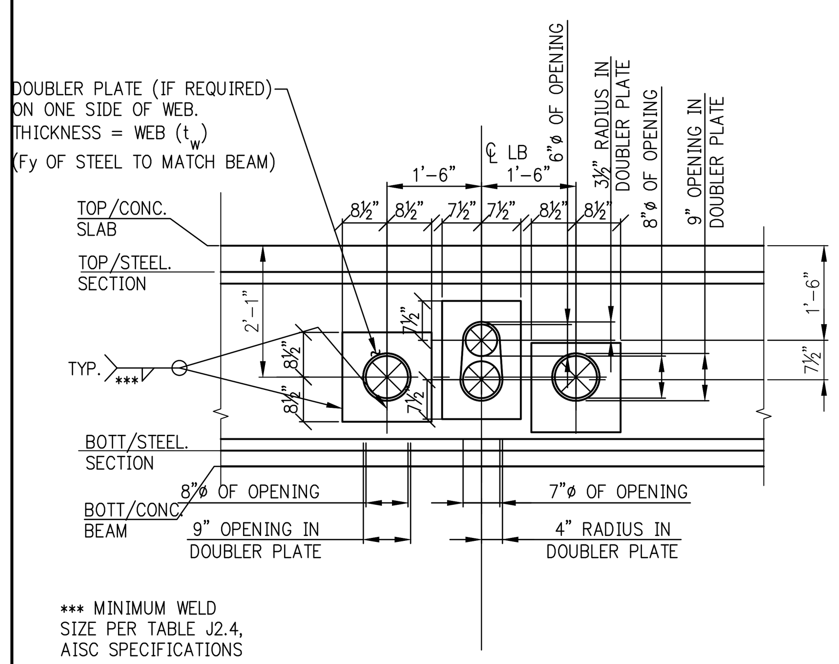

STEEL LINK BEAM WEB OPENING TYPE 6

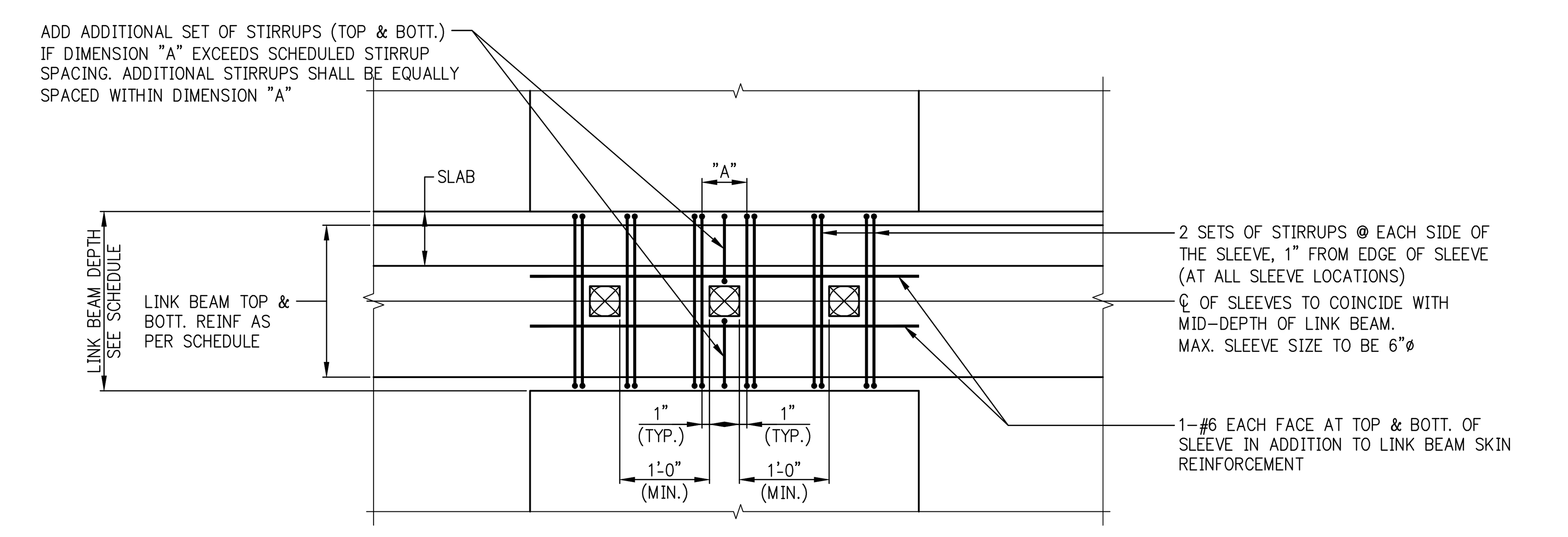

ELEVATION – TYPICAL SLEEVE PENETRATION DETAIL THROUGH LINK BEAMS

NOTES:
1. ALL SCHEDULED BEAM REINFORCEMENT (NOT SHOWN) IS TO BE CONTINUOUS
2. FOR 2 OR MORE SLEEVES, ALL SLEEVES SHALL BE POSITIONED & ALIGNED HORIZONTALLY AS INDICATED ON THE TYPICAL DETAIL.
3. SLEEVE PENETRATIONS THAT DO NOT SATISFY THE REQUIREMENTS OF THIS DETAIL ARE NOT PERMITTED UNLESS REVIEWED AND APPROVED BY THE ENGINEER OF RECORD IN ADVANCE OF CONSTRUCTION.

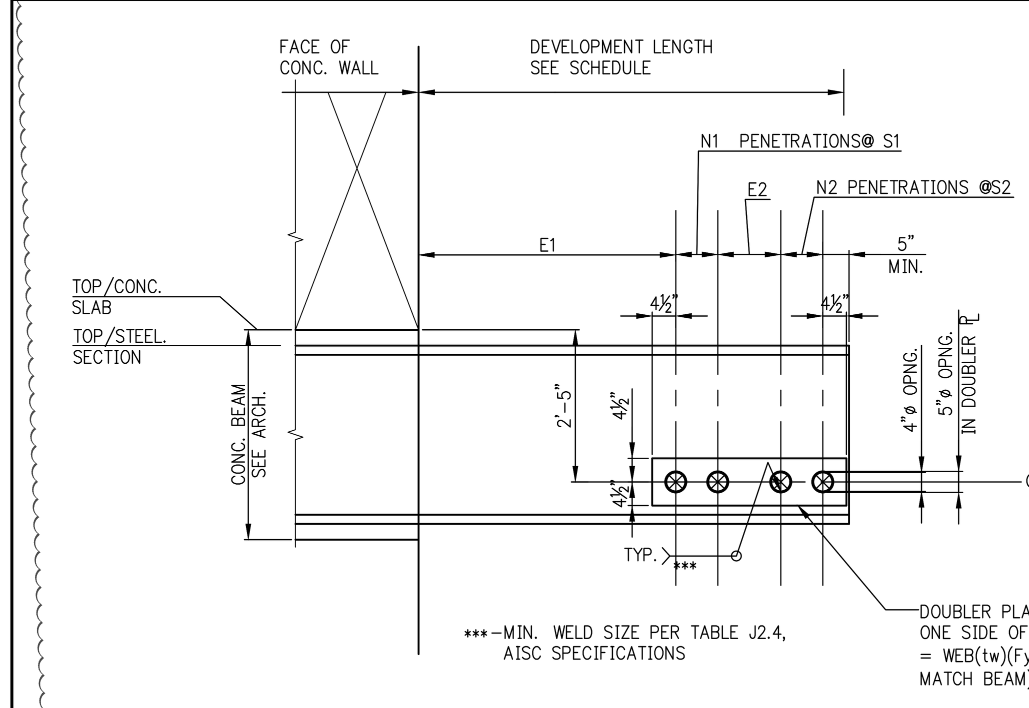

OPNG. TYPE	E1	N1	S1(INCH)	E2	N2	S2(INCH)
5A	4'-1 1/2"	3	8"	N.A.	0	N.A.
5B	4'-3 1/4"	3	8"	N.A.	0	N.A.
5C	4'-9"	3	8"	N.A.	0	N.A.
5D	4'-11"	3	8"	N.A.	0	N.A.
5E	4'-9 1/2"	3	8"	N.A.	0	N.A.
5F	5'-8"	3	8"	N.A.	0	N.A.
5G	4'-1 1/2"	3	8"	1'-3"	2	8"
5H	6'-1"	3	8"	N.A.	0	N.A.
5J	4'-3"	3	8"	N.A.	0	N.A.
5K	5'-11"	3	8"	N.A.	0	N.A.
5L	4'-11 1/2"	3	8"	1'-1"	1	N.A.

STEEL LINK BEAM WEB OPENING TYPE 5A THRU 5L

NOTE:
1. FOR BALANCE OF INFORMATION, SEE TYP. LINK BEAM EMBEDMENT DETAIL ON THIS DRAWING.

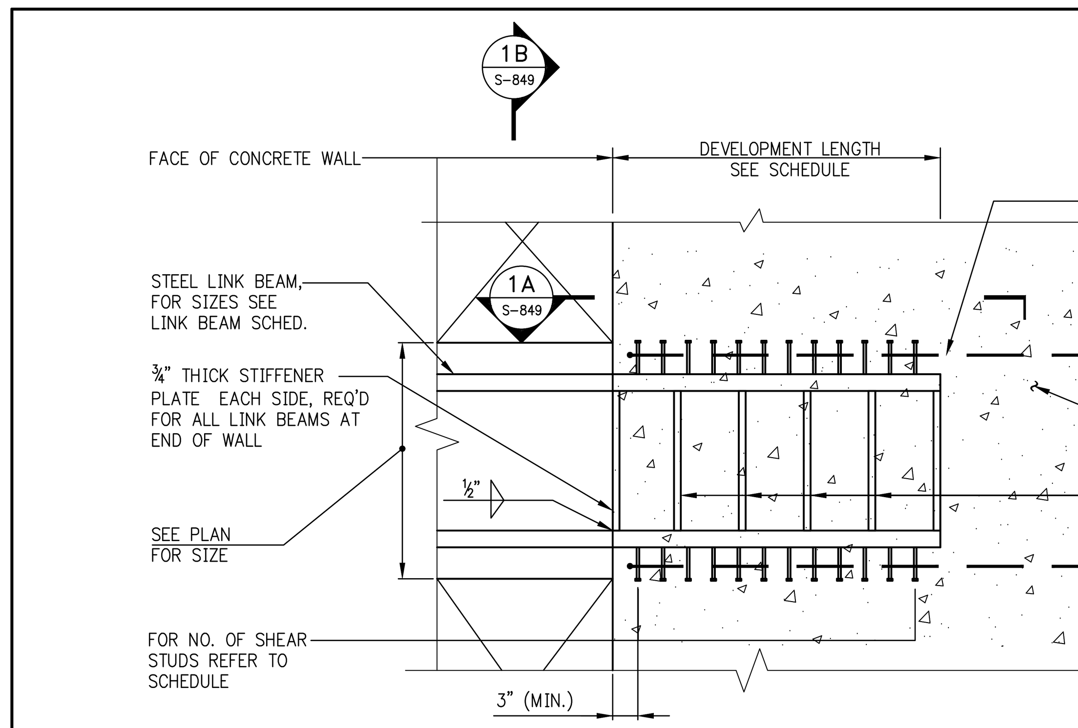

TYPICAL STEEL LINK BEAM EMBEDMENT DETAIL

NOTES:
1. ALL STUDS SHALL BE A108 ⅞"ø Fu = 65ksi

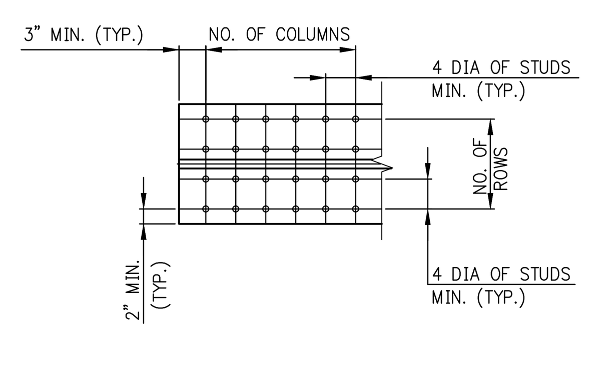

1A S-849 PLAN VIEW

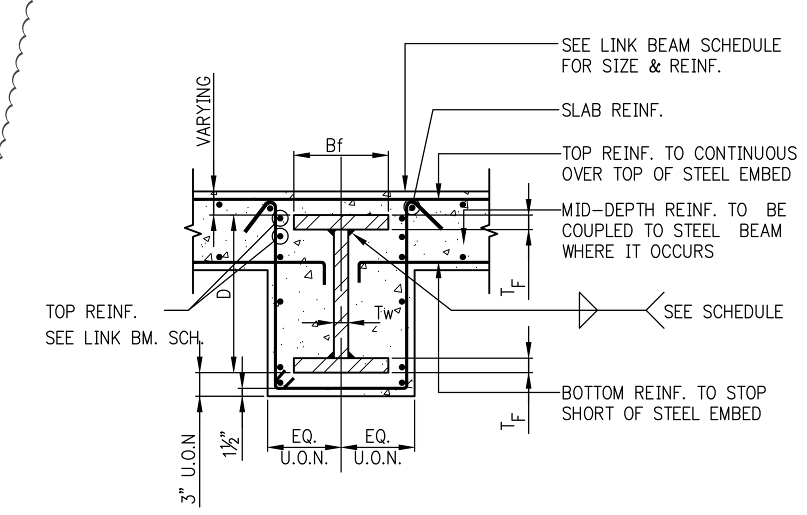

1B S-849 BUILT-UP STEEL LINK BEAM DETAIL

SCALE: N.T.S.

NOTE:
1. PLATES SHALL BE A572 GR. 65 (Fy=65 KSI)

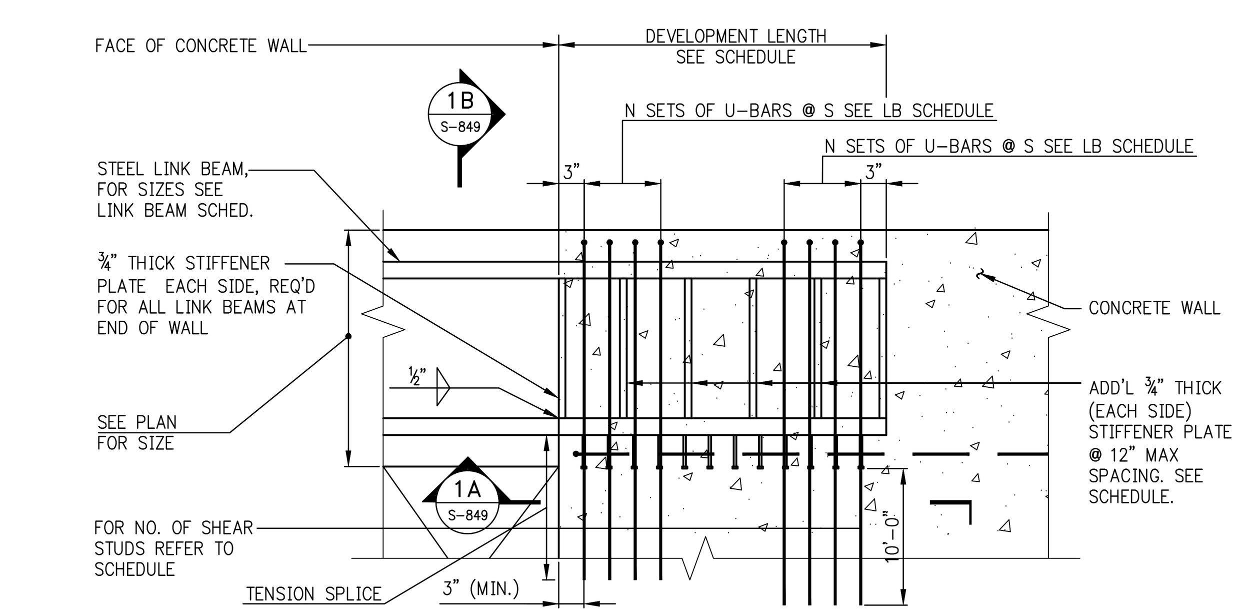

TYPICAL STEEL LINK BEAM EMBEDMENT DETAIL AT TOP OF CONCRETE WALL

NOTES:
1. ALL STUDS SHALL BE A108 ⅞"ø Fu = 65ksi

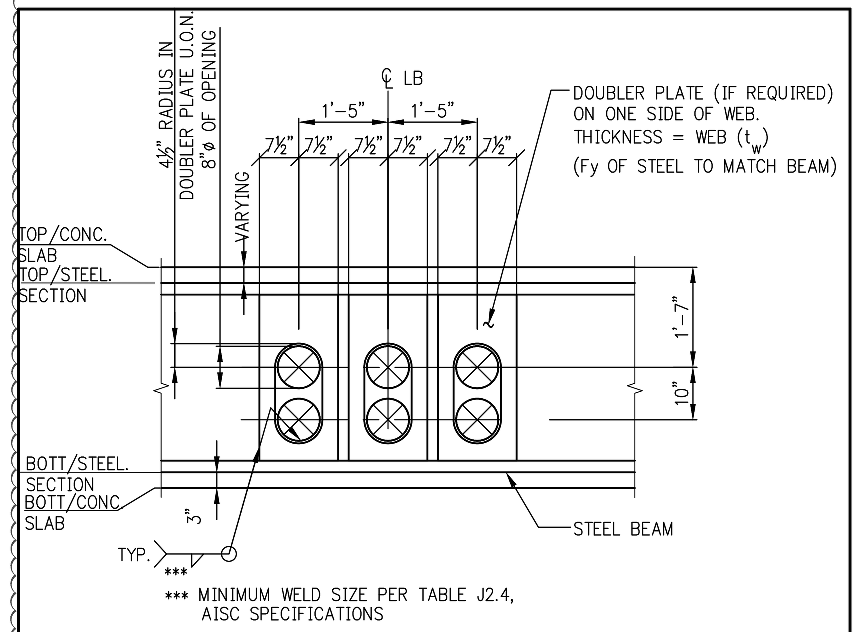

STEEL LINK BEAM WEB OPENING TYPE 7

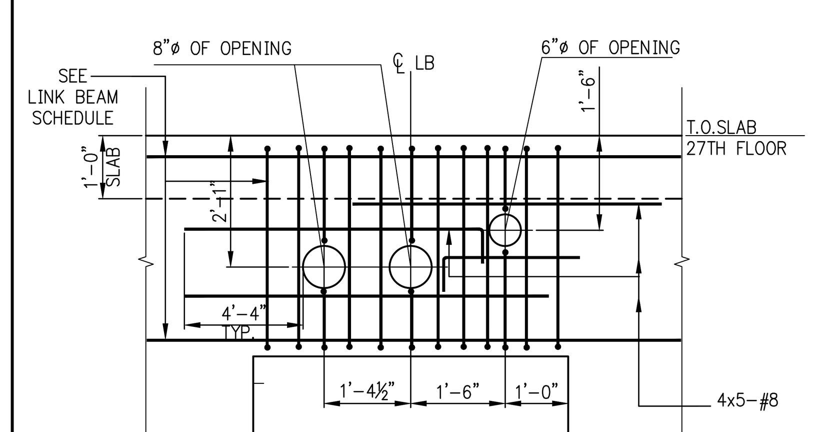

LB01 OPENING AT 27TH FLOOR

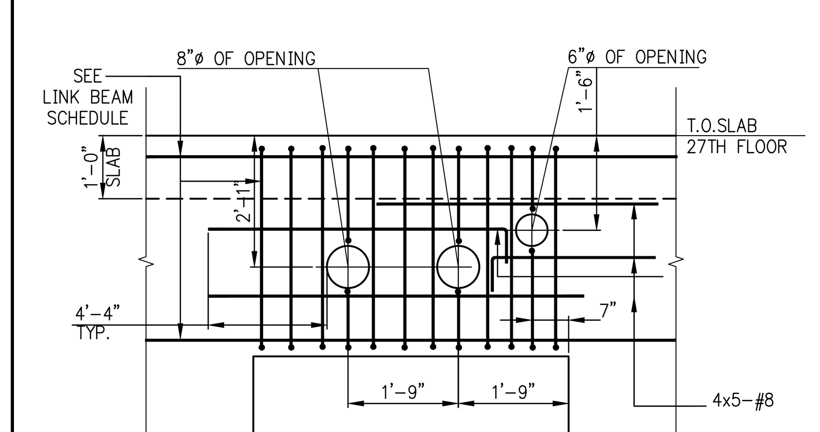

LB13 OPENING AT 27TH FLOOR

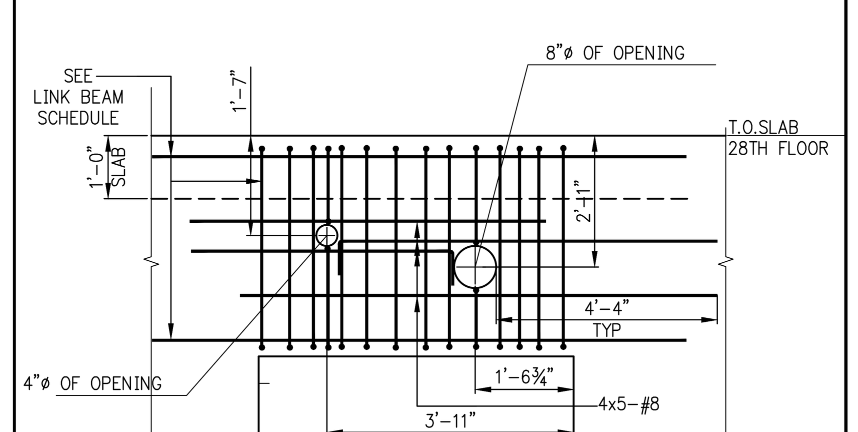

LB01 OPENING AT 28TH FLOOR

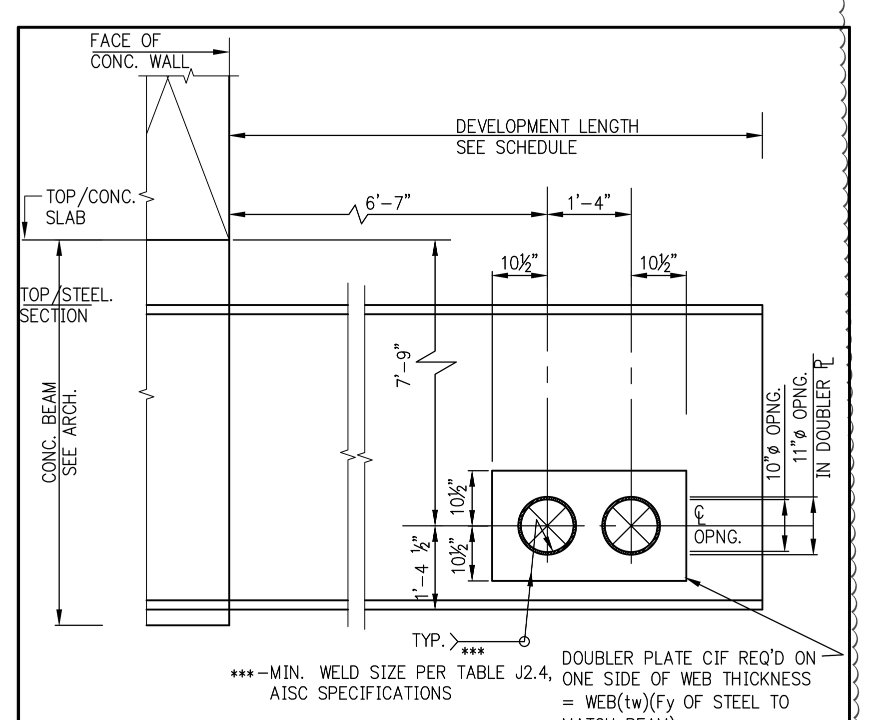

STEEL LINK BEAM WEB OPENING ON LB05 AT 28TH FLOOR

NOTE:
1. FOR BALANCE OF INFORMATION, SEE TYP. LINK BEAM EMBEDMENT DETAIL ON THIS DRAWING.

KEY PLAN:

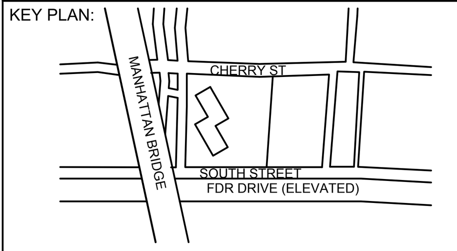

PROJECT NORTH | TRUE NORTH

DEVELOPER:
EXTELL DEVELOPMENT COMPANY
805 Third Ave, 7th Floor
New York, NY 10022
TEL: 212-712-6000 FAX: 212-712-6100

ARCHITECT OF RECORD:
AAI ARCHITECTS, P.C.
14 Wall Street, 2nd Floor
New York, NY 10005
TEL: 212-964-4040 FAX: 212-964-4090

INTERIOR DESIGNER:
MEYER DAVIS
180 Varick St, suite 404
New York, NY 10014
TEL: 212-627-5574

LANDSCAPE DESIGNER:
WEST 8 URBAN DESIGN & LANDSCAPE ARCHITECTURE P.C.
333 Hudson Street, Suite 905
New York, NY 10013
TEL: 212-285-0088 FAX: 212-285-0228

STRUCTURAL ENGINEERS:
WSP
228 East 45th Street
New York, NY 10017
TEL: 212-687-9888 FAX: 646-487-5501

MEP ENGINEERS:
ICOR ASSOCIATES, LLC
485 C Route 1 South, Suite 200
Iseline, NJ 08830
TEL: 908-272-3300 FAX: 908-272-4440

GEOTECHNICAL ENGINEERS:
LANGAN ENGINEERING & ENVIRONMENTAL SERVICES
21 Penn Plaza - 360 West 31st Street, 8th Floor
New York, NY 10001
TEL: 212.479.5400 FAX: 212.479.5444

No.	DESCRIPTION:	DATE:
	CONCRETE BID PACKAGE	03-06-15
	ADDENDUM #5	05-01-15
	ISSUED FOR FILING	07-28-15
	80% CONSTRUCTION DOCUMENT	08-14-15
	ADDENDUM #16	02-04-16
	ASI#58	03-04-16
	ASI#59	03-11-16
	ISSUE FOR CONSTRUCTION	03-18-16
1	ASI #64	05-13-16
2	ASI #66	06-03-16
3	ASI #74	09-16-16
4.	ASI #75	10-10-16
5.	ASI #76	10-28-16
6.	ASI #80	12-09-16
7.	ASI #81	12-22-16
8.	ASI #82	01-16-17
9.	ASI #85	03-01-17
10.	ASI #86	03-17-17
11.	ASI #88	04-14-17
	ISSUED FOR FILING	05-22-17

Discrepancies must be reported immediately to the Architect before proceeding. Only figured dimensions are to be used. Contractors must check all dimensions on site. This drawing is protected by copyright.

ALL DIMENSIONS ARE SHOWN IN IMPERIAL.

CONSULTANT: WSP

PROJECT:
252 SOUTH STREET
NEW YORK, NY

DRAWING TITLE:
TYPICAL SHEARWALL DETAILS

SEAL & SIGNATURE:

DATE:	07/25/14
PROJECT No:	1302510
DRAWN: CADD	REV:
CHK:	CL
SCALE:	N.T.S.
DWG No:	S-849.02
DOB PAGE No:	of

DOB EMPLOYEE STAMP: | DOB B-SCAN:

Tina Mathew, RA
APPROVED
Under Directive 2 of 1975
AMENDED APPLICATION
Date: 10/23/2017
NYC Development Hub

30" x 42" Arch E1 - SHEET SIZE
FILE NAME:
PLOT DATE:

DEPT OF BLDGS121185539 Job Number
ES4095712139 Scan Code
30" x 42" Arch E1 SHEET SIZE

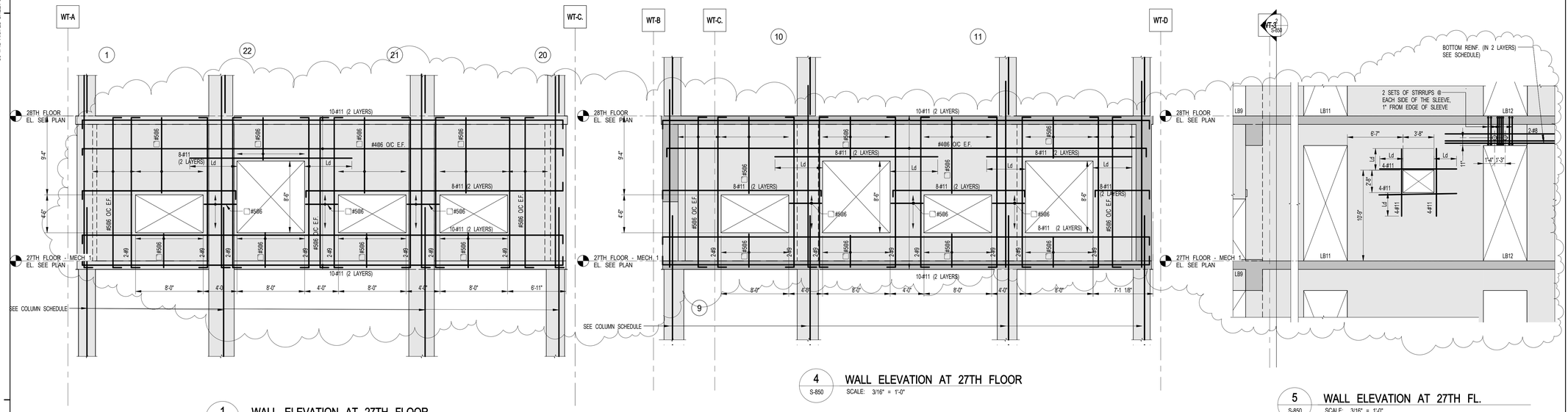

1 S-850 WALL ELEVATION AT 27TH FLOOR
SCALE: 3/16" = 1'-0"

4 S-850 WALL ELEVATION AT 27TH FLOOR
SCALE: 3/16" = 1'-0"

5 S-850 WALL ELEVATION AT 27TH FL.
SCALE: 3/16" = 1'-0"

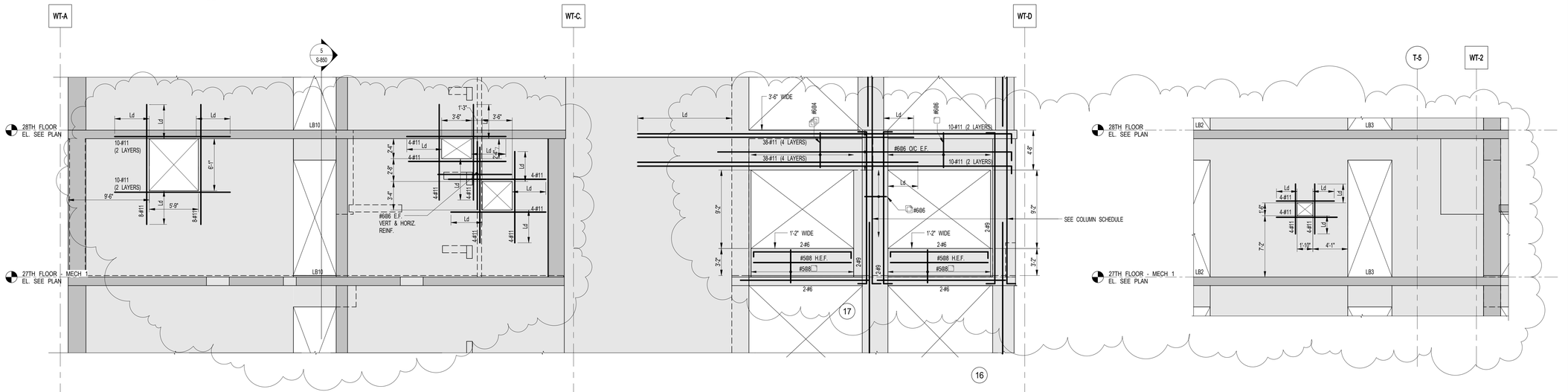

2 S-850 WALL ELEVATION AT 27TH FLOOR
SCALE: 3/16" = 1'-0"

6 S-850 WALL ELEVATION AT 27TH FL.
SCALE: 3/16" = 1'-0"

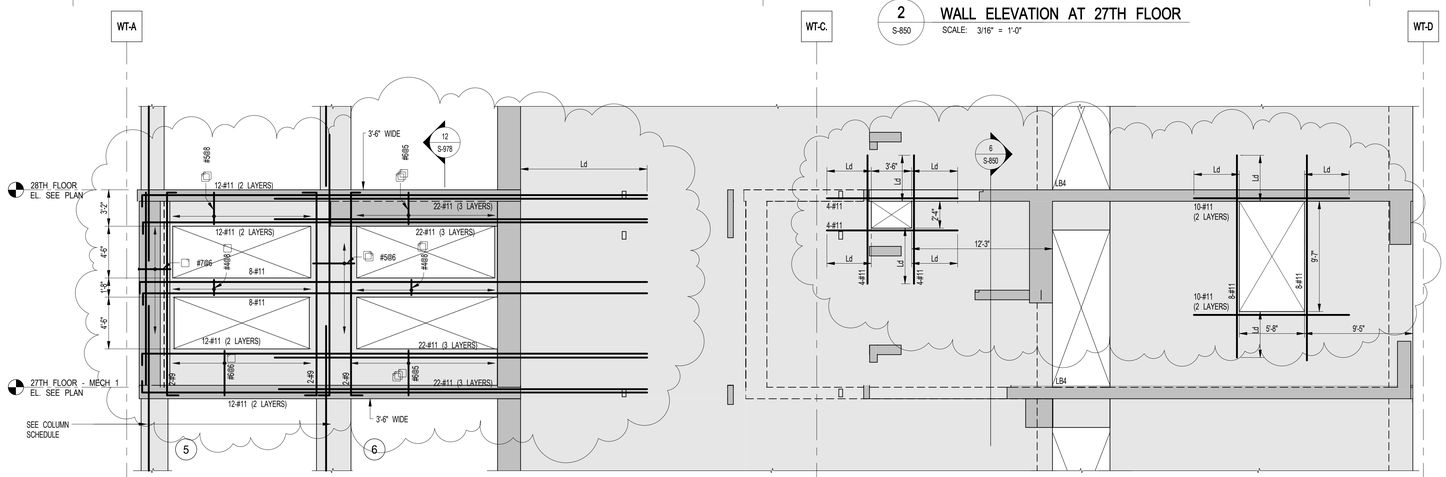

3 S-850 WALL ELEVATION AT 27TH FLOOR
SCALE: 3/16" = 1'-0"

NOTES:
1. ALL #11 BARS ARE GRADE 75 KSI

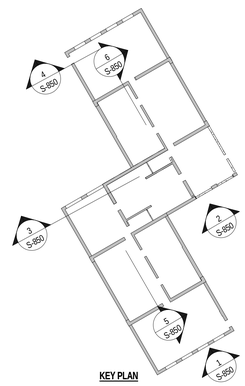

KEY PLAN

KEY PLAN:

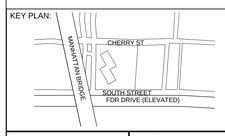

PROJECT NORTH

TRUE NORTH

DEVELOPER:
EXTELL DEVELOPMENT COMPANY
805 Third Ave, 7th Floor
New York, NY 10022
TEL: 212-712-6000 FAX: 212-712-6100

ARCHITECT OF RECORD:
AAI ARCHITECTS, P.C.
14 Wall Street, 2nd Floor
New York, NY 10005
TEL: 212-964-4040 FAX: 212-964-4090

INTERIOR DESIGNER:
MEYER DAVIS
180 Varick St, suite 404
New York, NY 10014
TEL: 212-627-5574

LANDSCAPE DESIGNER:
WEST 8 URBAN DESIGN & LANDSCAPE ARCHITECTURE P.C.
333 Hudson Street, Suite 905
New York, NY 10013
TEL: 212-285-0088 FAX: 212-285-0228

STRUCTURAL ENGINEERS:
WSP
228 East 45th Street
New York, NY 10017
TEL: 212-687-9888 FAX: 646-487-5501

MEP ENGINEERS:
ICOR ASSOCIATES, LLC
485 C Route 1 South, Suite 200
Iseline, NJ 08830
TEL: 908-272-3300 FAX: 908-272-4440

GEOTECHNICAL ENGINEERS:
LANGAN ENGINEERING & ENVIRONMENTAL SERVICES
21 Penn Plaza - 360 West 31st Street, 8th Floor
New York, NY 10001
TEL: 212.479.5400 FAX: 212.479.5444

No.	DESCRIPTION:	DATE:
	CONCRETE BID PACKAGE	03-06-15
	ISSUED FOR FILING	07-28-15
	80% CONSTRUCTION DOCUMENTS	08-14-15
	90% CONSTRUCTION DOCUMENTS	01-15-16
	ISSUE FOR CONSTRUCTION	03-18-16
1	ASI #74	09-16-16
2	ASI #76	10-28-16
3	ISSUED FOR FILING	05-22-17

Discrepancies must be reported immediately to the Architect before proceeding. Only figured dimensions are to be used. Contractors must check all dimensions on site. This drawing is protected by copyright.

ALL DIMENSIONS ARE SHOWN IN IMPERIAL.

CONSULTANT:
WSP

PROJECT:
252 SOUTH STREET
NEW YORK, NY

DRAWING TITLE:
OUTRIGGER WALLS ELEVATIONS AT 27TH FLOOR - 1

SEAL & SIGNATURE:
STATE OF NEW YORK
AHMAD RAMADAN
No. 085527
LICENSED PROFESSIONAL ENGINEER

DATE:	03/06/15
PROJECT No:	1302510
DRAWN: CAD	REV:
CHK: CL	
SCALE: As indicated	
DWG No:	**S-850.01**
DOB PAGE No:	of

DOB EMPLOYEE STAMP:
Tina Mathew, RA
APPROVED
Under Directive 2 of 1975
AMENDED APPLICATION
Date: 10/23/2017
NYC Development Hub

DOB B-SCAN:

FILE NAME:
PLOT DATE:

DEPT OF BLDGS121805628 Job Number
E.58885799782 Scan Code

30" x 42" Arch E1 SHEET SIZE

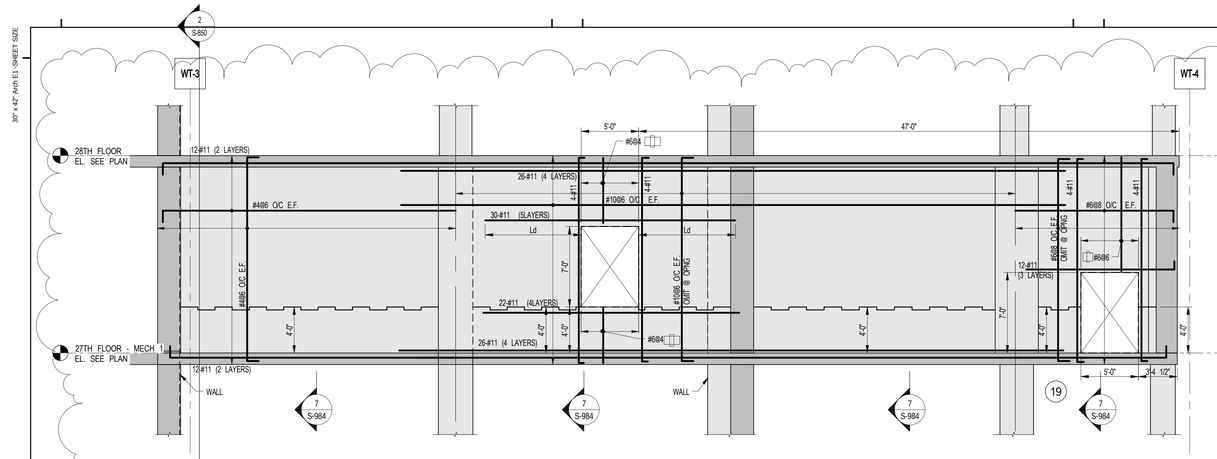

1 S-851 **WALL ELEVATION AT 27TH FLOOR**
SCALE: 3/16" = 1'-0"

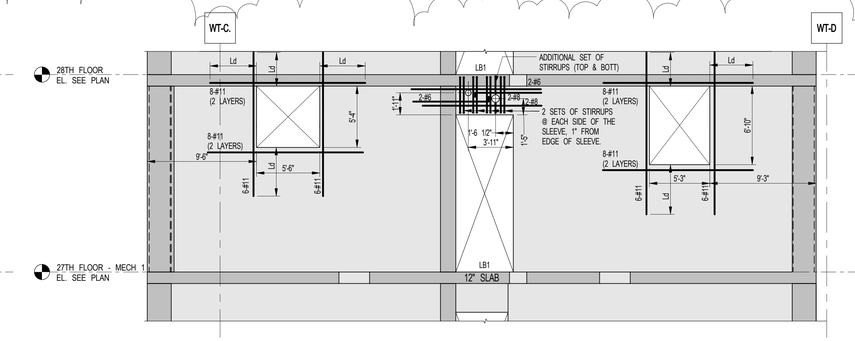

2 S-851 **SW-1 WALL ELEVATION AT 27TH STREET**
SCALE: 3/16" = 1'-0"

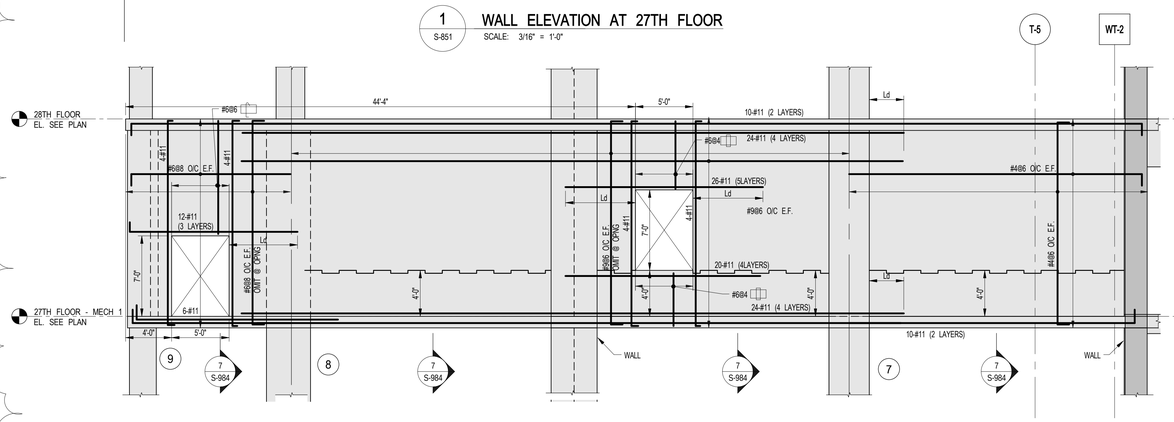

3 S-851 **WALL ELEVATION AT 27TH FLOOR**
SCALE: 3/16" = 1'-0"

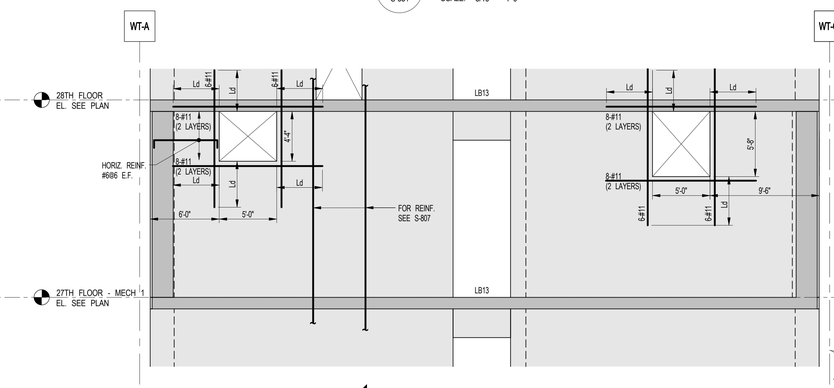

4 S-851 **SW-9 WALL ELEVATION AT 27TH STREET**
SCALE: 3/16" = 1'-0"

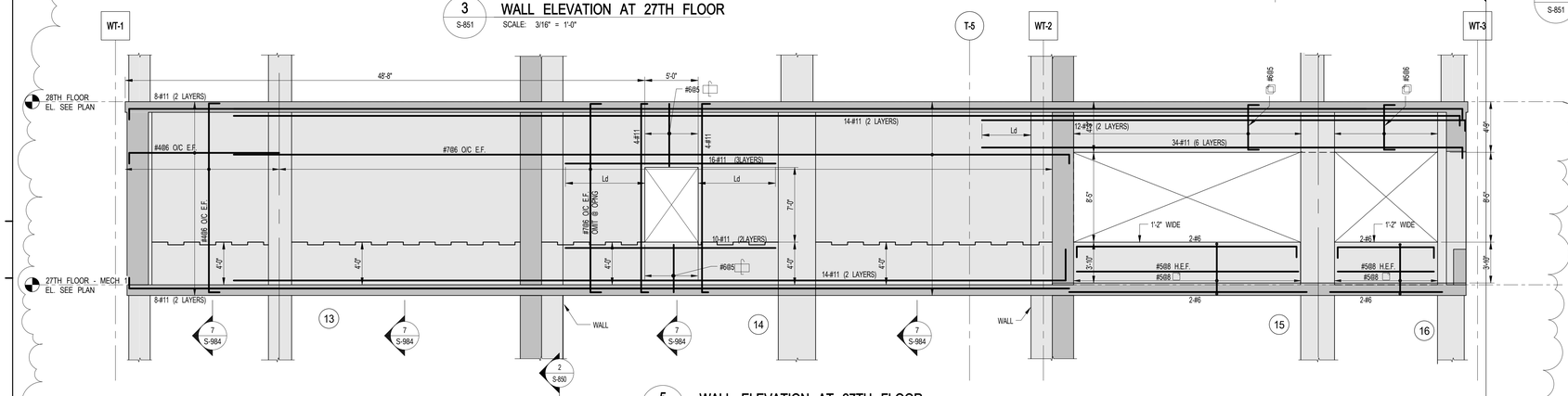

5 S-851 **WALL ELEVATION AT 27TH FLOOR**
SCALE: 3/16" = 1'-0"

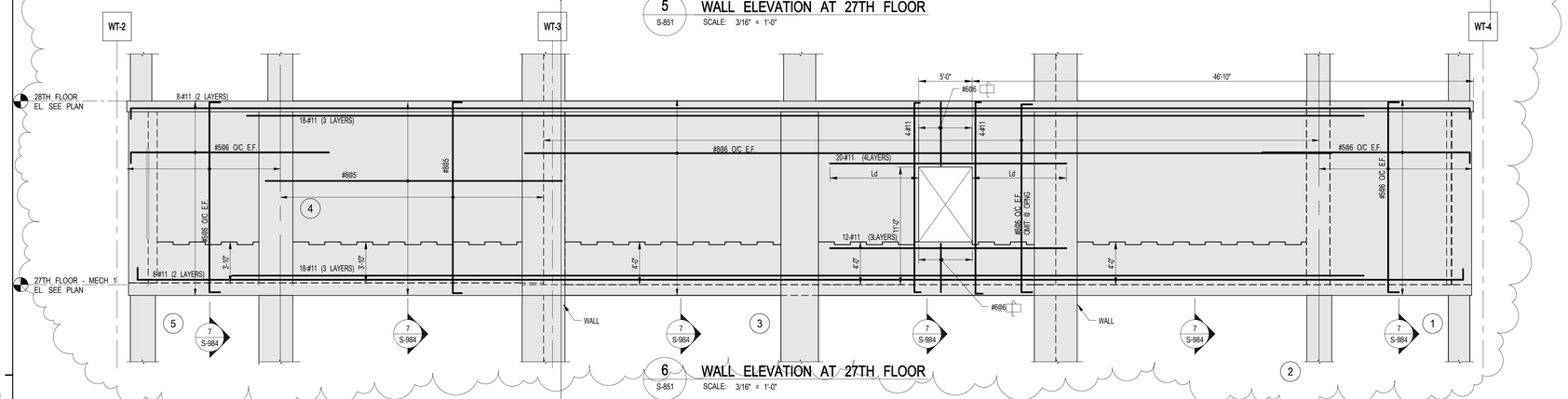

6 S-851 **WALL ELEVATION AT 27TH FLOOR**
SCALE: 3/16" = 1'-0"

NOTES:
1. ALL #11 BARS ARE GRADE 75 KSI.

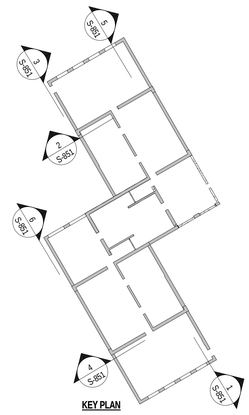

KEY PLAN:

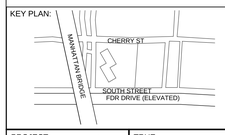

PROJECT NORTH

TRUE NORTH

DEVELOPER:
EXTELL DEVELOPMENT COMPANY
805 Third Ave, 7th Floor
New York, NY 10022
TEL: 212-712-6000 FAX: 212-712-6100

ARCHITECT OF RECORD:
AAI ARCHITECTS, P.C.
14 Wall Street, 2nd Floor
New York, NY 10005
TEL: 212-964-4040 FAX: 212-964-4090

INTERIOR DESIGNER:
MEYER DAVIS
180 Varick St, suite 404
New York, NY 10014
TEL: 212-627-5574

LANDSCAPE DESIGNER:
WEST 8 URBAN DESIGN & LANDSCAPE ARCHITECTURE P.C.
333 Hudson Street, Suite 905
New York, NY 10013
TEL: 212-285-0088 FAX: 212-285-0228

STRUCTURAL ENGINEERS:
WSP
228 East 45th Street
New York, NY 10017
TEL: 212-687-9888 FAX: 646-487-5501

MEP ENGINEERS:
ICOR ASSOCIATES, LLC
485 C Route 1 South, Suite 200
Iseline, NJ 08830
TEL: 908-272-3300 FAX: 908-272-4440

GEOTECHNICAL ENGINEERS:
LANGAN ENGINEERING & ENVIRONMENTAL SERVICES
21 Penn Plaza - 360 West 31st Street, 8th Floor
New York, NY 10001
TEL: 212.479.5400 FAX: 212.479.5444

No.	DESCRIPTION:	DATE:
	CONCRETE BID PACKAGE	03-06-15
	ISSUED FOR FILING	07-28-15
	80% CONSTRUCTION DOCUMENTS	08-14-15
	ASI #13	08-26-15
	90% CONSTRUCTION DOCUMENTS	01-15-16
	ISSUE FOR CONSTRUCTION	03-18-16
1	ASI #67	06-17-16
2	ASI #74	09-16-16
3	ASI #76	10-28-16
	ISSUED FOR FILING	05-22-17

Discrepancies must be reported immediately to the Architect before proceeding. Only figured dimensions are to be used. Contractors must check all dimensions on site. This drawing is protected by copyright.

ALL DIMENSIONS ARE SHOWN IN IMPERIAL.

CONSULTANT:
WSP

PROJECT:
252 SOUTH STREET
NEW YORK, NY

DRAWING TITLE:
OUTRIGGER WALLS ELEVATIONS AT 27TH FLOOR - 2

SEAL & SIGNATURE:
STATE OF NEW YORK · AHMAD RAMADAN · 085527 · LICENSED PROFESSIONAL ENGINEER

DATE:	03/06/15
PROJECT No:	1302510
DRAWN: CAD	REV:
CHK: CL	
SCALE: As indicated	
DWG No:	**S-851.01**
DOB PAGE No:	of

DOB EMPLOYEE STAMP:
Tina Mathew, RA
APPROVED
Under Directive 2 of 1975
AMENDED APPLICATION
Date: 10/23/2017
NYC Development Hub

DOB B-SCAN:

FILE NAME:
PLOT DATE:

DEPT OF BLDGS121185539 Job Number
E-59#NO01151 Scan Code

30" x 42" Arch E1 SHEET SIZE

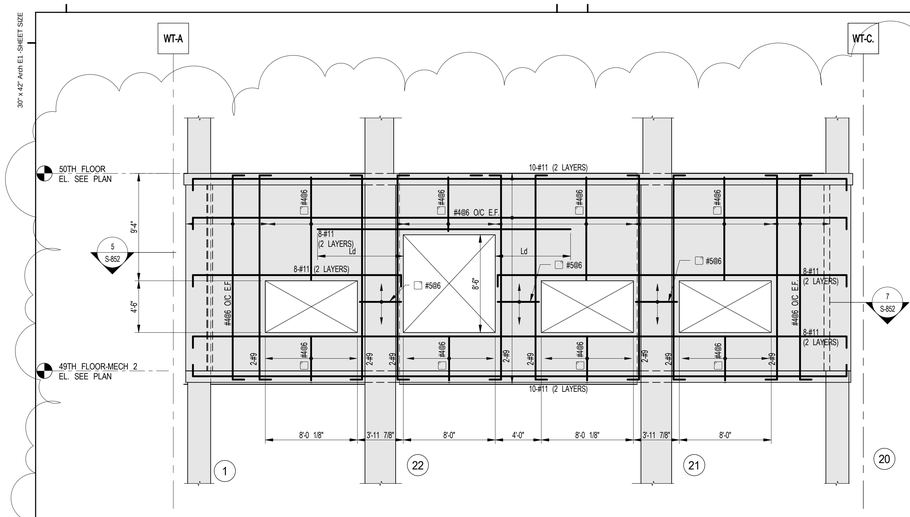

1 S-852 **WALL ELEVATION AT 49TH FLOOR**
SCALE: 3/16" = 1'-0"

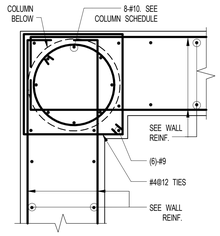

8 **REINFORCEMENT AT COL. 9**
3/4" = 1'-0"

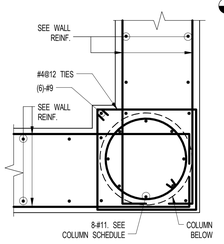

7 **REINFORCEMENT AT COL. 20**
3/4" = 1'-0"

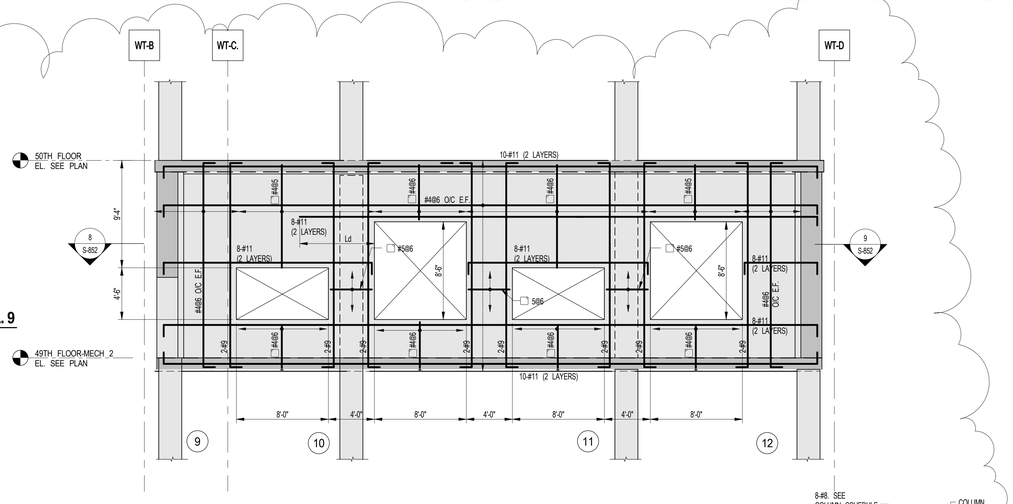

4 S-852 **WALL ELEVATION AT 49TH FLOOR**
SCALE: 3/16" = 1'-0"

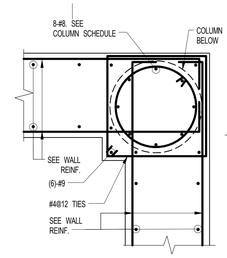

9 **REINFORCEMENT AT COL. 12**
3/4" = 1'-0"

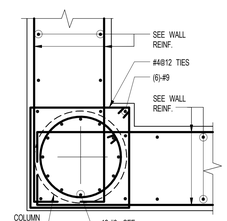

5 **REINFORCEMENT AT COL 1**
3/4" = 1'-0"

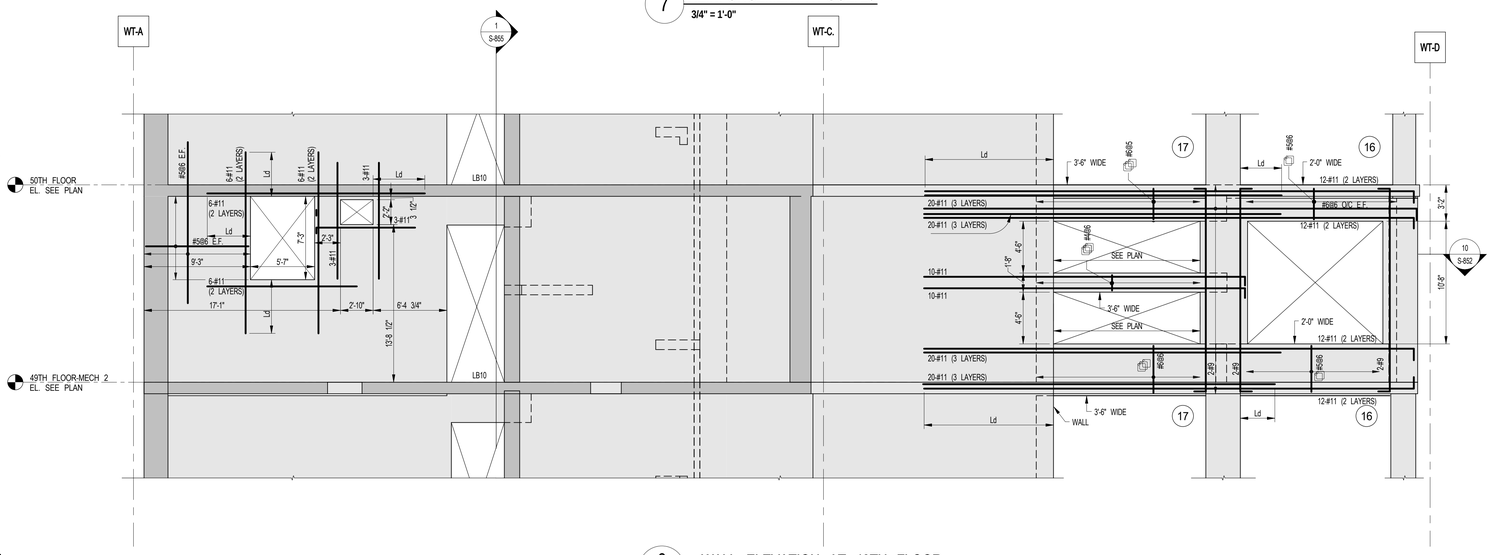

2 S-852 **WALL ELEVATION AT 49TH FLOOR**
SCALE: 3/16" = 1'-0"

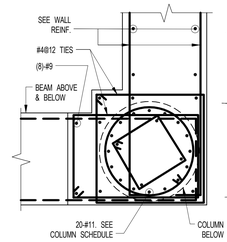

10 **REINFORCEMENT AT COL. 16**
3/4" = 1'-0"

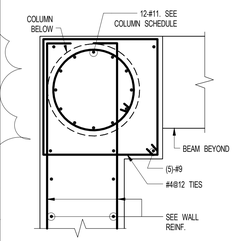

11 **REINFORCEMENT AT COL. 5**
3/4" = 1'-0"

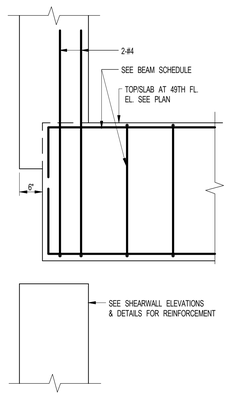

12 **SECTION**
3/4" = 1'-0"

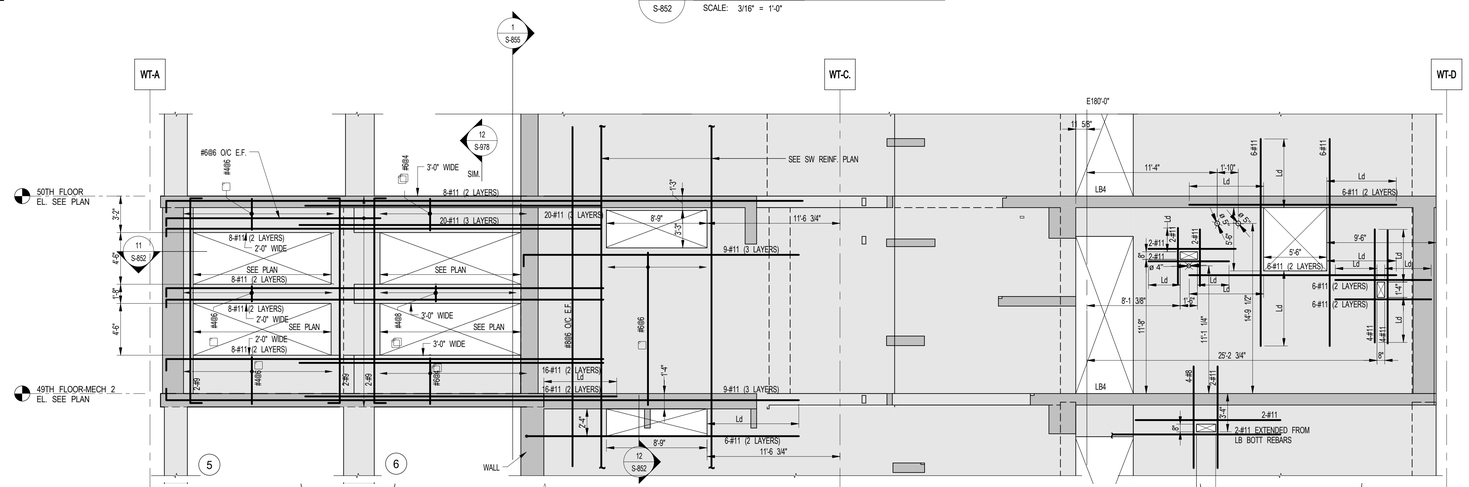

3 S-852 **WALL ELEVATION AT 49TH FLOOR**
SCALE: 3/16" = 1'-0"

NOTES:
1. ALL #11 BARS ARE GRADE 75 KSI.

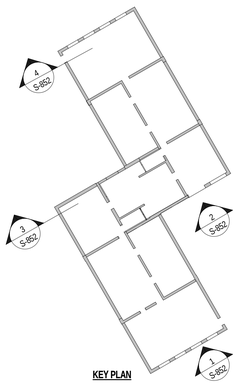

KEY PLAN

FILE NAME:
PLOT DATE:

KEY PLAN:

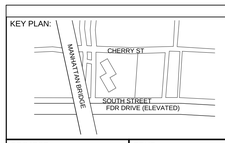

PROJECT NORTH

TRUE NORTH

DEVELOPER:
EXTELL DEVELOPMENT COMPANY
805 Third Ave, 7th Floor
New York, NY 10022
TEL: 212-712-6000 FAX: 212-712-6100

ARCHITECT OF RECORD:
AAI ARCHITECTS, P.C.
14 Wall Street, 2nd Floor
New York, NY 10005
TEL: 212-964-4040 FAX: 212-964-4090

INTERIOR DESIGNER:
MEYER DAVIS
180 Varick St, suite 404
New York, NY 10014
TEL: 212-627-5574

LANDSCAPE DESIGNER:
WEST 8 URBAN DESIGN & LANDSCAPE ARCHITECTURE P.C.
333 Hudson Street, Suite 905
New York, NY 10013
TEL: 212-285-0088 FAX: 212-285-0228

STRUCTURAL ENGINEERS:
WSP
228 East 45th Street
New York, NY 10017
TEL: 212-687-9888 FAX: 646-487-5501

MEP ENGINEERS:
ICOR ASSOCIATES, LLC
485 C Route 1 South, Suite 200
Iseline, NJ 08830
TEL: 908-272-3300 FAX: 908-272-4440

GEOTECHNICAL ENGINEERS:
LANGAN ENGINEERING & ENVIRONMENTAL SERVICES
21 Penn Plaza - 360 West 31st Street, 8th Floor
New York, NY 10001
TEL: 212.479.5400 FAX: 212.479.5444

No.	DESCRIPTION:	DATE:
	CONCRETE BID PACKAGE	03-06-15
	ISSUED FOR FILING	07-28-15
	80% CONSTRUCTION DOCUMENTS	08-14-15
	90% CONSTRUCTION DOCUMENTS	01-15-16
	ISSUE FOR CONSTRUCTION	03-18-16
1	ASI #82	01-16-17
2	ASI #85	03-01-17
3	ASI #86	03-17-17
4	ASI #87	03-31-17
5	ASI #88	04-14-17
	ISSUED FOR FILING	05-22-17

Discrepancies must be reported immediately to the Architect before proceeding. Only figured dimensions are to be used. Contractors must check all dimensions on site. This drawing is protected by copyright.

ALL DIMENSIONS ARE SHOWN IN IMPERIAL.

CONSULTANT:
WSP

PROJECT:
252 SOUTH STREET
NEW YORK, NY

DRAWING TITLE:
OUTRIGGER WALLS ELEVATIONS AT 49TH FLOOR - 1

SEAL & SIGNATURE:

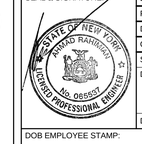

DATE:	03/06/15
PROJECT No:	1302510
DRAWN: CAD	REV:
CHK: CL	
SCALE: As indicated	
DWG No:	**S-852.01**
DOB PAGE No:	of

DOB EMPLOYEE STAMP:

Tina Mathew, RA
Building Code Compliance Group
APPROVED
Under Directive 2 of 1975
AMENDMENT APPLICATION
Date: 10/23/2017
NYC Development Hub

DOB B-SCAN:

DEPT OF BLDGS 121105539 Job Number
E:SE1662210134 Scan Code

30" x 42" Arch E1 SHEET SIZE

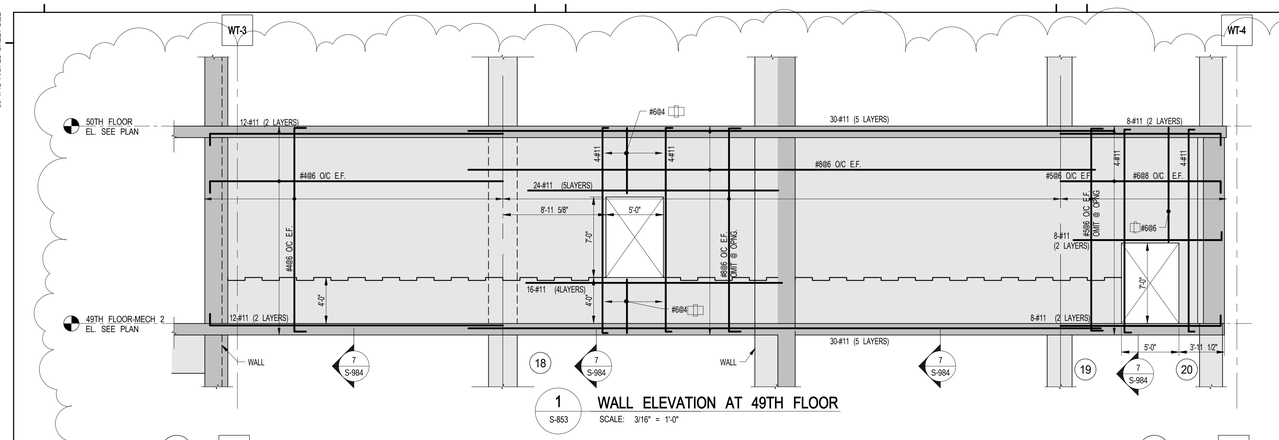

1 S-853 WALL ELEVATION AT 49TH FLOOR
SCALE: 3/16" = 1'-0"

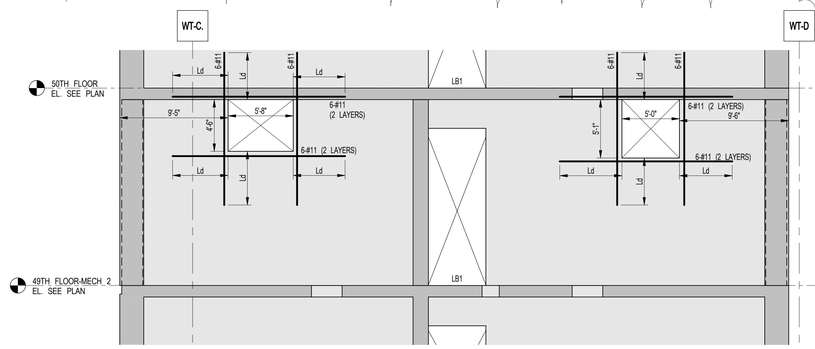

2 S-853 SW-1 WALL ELEVATION AT 49TH STREET
SCALE: 3/16" = 1'-0"

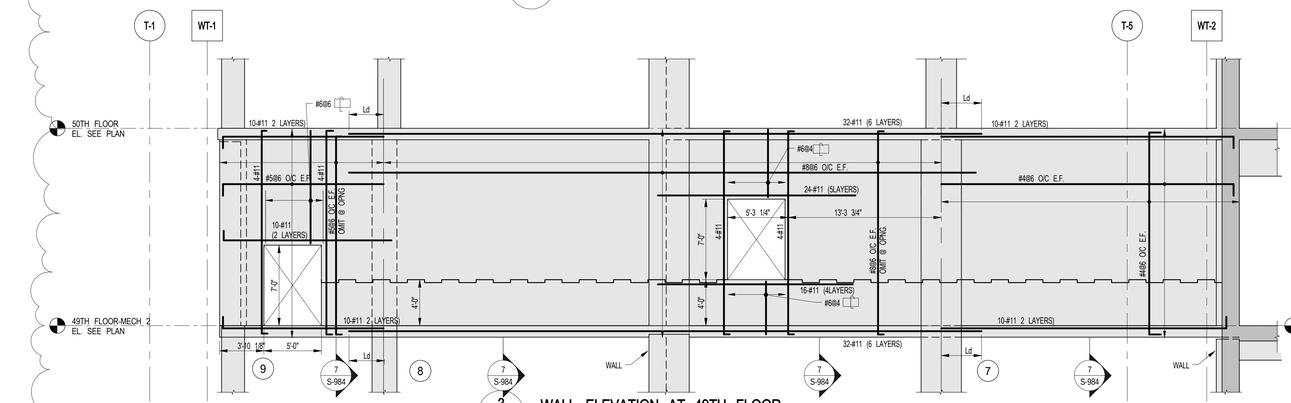

3 S-853 WALL ELEVATION AT 49TH FLOOR
SCALE: 3/16" = 1'-0"

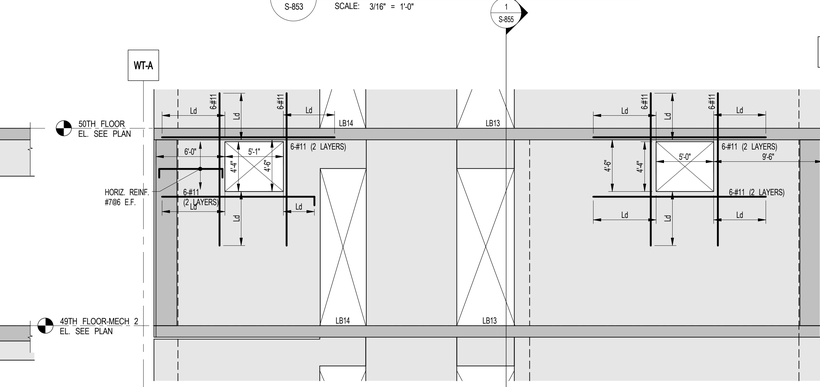

4 S-853 SW-9 WALL ELEVATION AT 49TH STREET
SCALE: 3/16" = 1'-0"

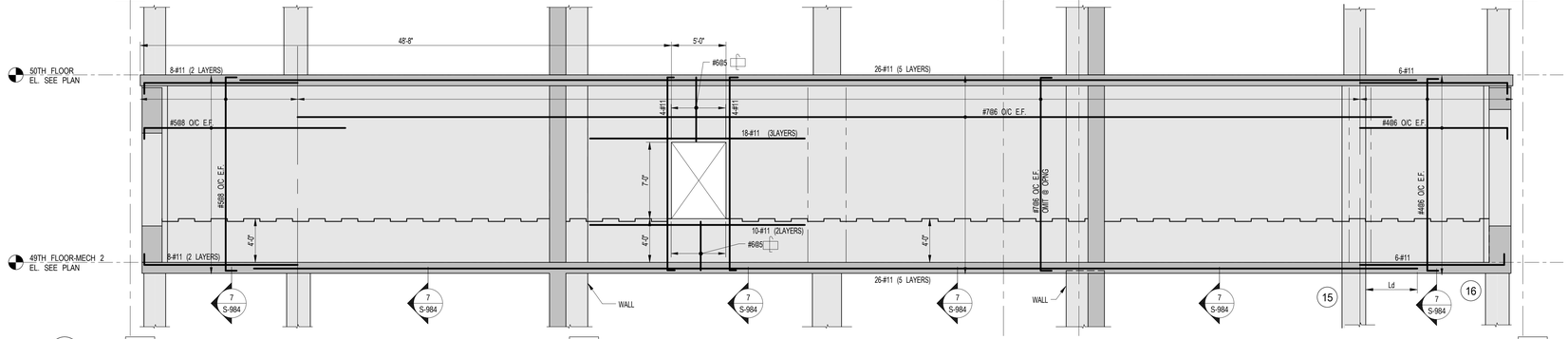

5 S-853 WALL ELEVATION AT 49TH FLOOR
SCALE: 3/16" = 1'-0"

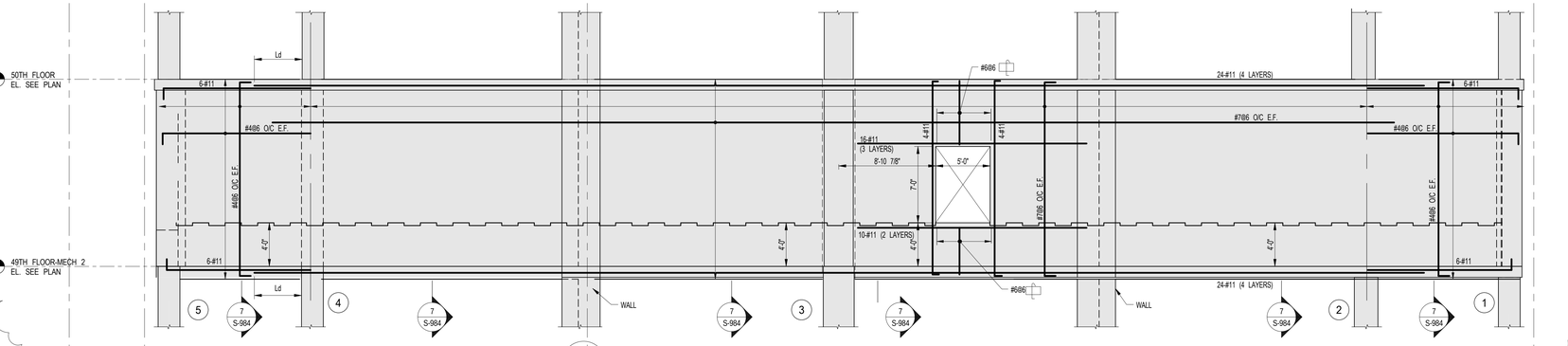

6 S-853 WALL ELEVATION AT 49TH FLOOR
SCALE: 3/16" = 1'-0"

NOTES:
1. ALL #11 BARS ARE GRADE 75 KSI.

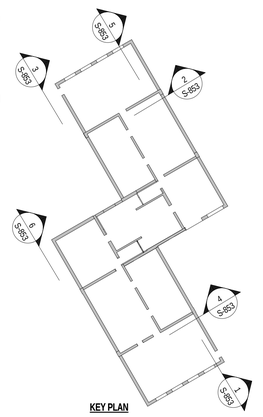

KEY PLAN

KEY PLAN:

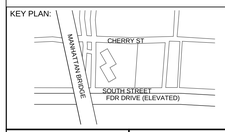

PROJECT NORTH

TRUE NORTH

DEVELOPER:
EXTELL DEVELOPMENT COMPANY
805 Third Ave, 7th Floor
New York, NY 10022
TEL: 212-712-6000 FAX: 212-712-6100

ARCHITECT OF RECORD:
AAI ARCHITECTS, P.C.
14 Wall Street, 2nd Floor
New York, NY 10005
TEL: 212-964-4040 FAX: 212-964-4090

INTERIOR DESIGNER:
MEYER DAVIS
180 Varick St, suite 404
New York, NY 10014
TEL: 212-627-5574

LANDSCAPE DESIGNER:
WEST 8 URBAN DESIGN & LANDSCAPE ARCHITECTURE P.C.
333 Hudson Street, Suite 905
New York, NY 10013
TEL: 212-285-0088 FAX: 212-285-0228

STRUCTURAL ENGINEERS:
WSP
228 East 45th Street
New York, NY 10017
TEL: 212-687-9888 FAX: 646-487-5501

MEP ENGINEERS:
ICOR ASSOCIATES, LLC
485 C Route 1 South, Suite 200
Iseline, NJ 08830
TEL: 908-272-3300 FAX: 908-272-4440

GEOTECHNICAL ENGINEERS:
LANGAN ENGINEERING & ENVIRONMENTAL SERVICES
21 Penn Plaza - 360 West 31st Street, 8th Floor
New York, NY 10001
TEL: 212.479.5400 FAX: 212.479.5444

No.	DESCRIPTION:	DATE:
	CONCRETE BID PACKAGE	03-06-15
	ISSUED FOR FILING	07-28-15
	80% CONSTRUCTION DOCUMENTS	08-14-15
	ASI #13	08-26-15
	90% CONSTRUCTION DOCUMENTS	01-15-16
	ISSUE FOR CONSTRUCTION	03-18-16
1	ASI #67	06-17-16
2	ASI #82	01-16-17
3	ASI #85	03-01-17
4	ASI #88	04-14-17
	ISSUED FOR FILING	05-22-17

Discrepancies must be reported immediately to the Architect before proceeding. Only figured dimensions are to be used. Contractors must check all dimensions on site. This drawing is protected by copyright.

ALL DIMENSIONS ARE SHOWN IN IMPERIAL.

CONSULTANT:
WSP

PROJECT:
252 SOUTH STREET
NEW YORK, NY

DRAWING TITLE:
OUTRIGGER WALLS ELEVATIONS AT 49TH FLOOR - 2

SEAL & SIGNATURE:
STATE OF NEW YORK · AHMAD RAMADAN · No. 085027 · LICENSED PROFESSIONAL ENGINEER

DATE: 03/06/15
PROJECT No: 1302510
DRAWN: CAD REV:
CHK: CL
SCALE: As indicated
DWG No:
S-853.01
DOB PAGE No: of

DOB EMPLOYEE STAMP:
Tina Mathew, RA
APPROVED
Under Directive 2 of 1975
AMENDED APPLICATION
Date: 10/23/2017
NYC Development Hub

DOB B-SCAN:

FILE NAME:
PLOT DATE:

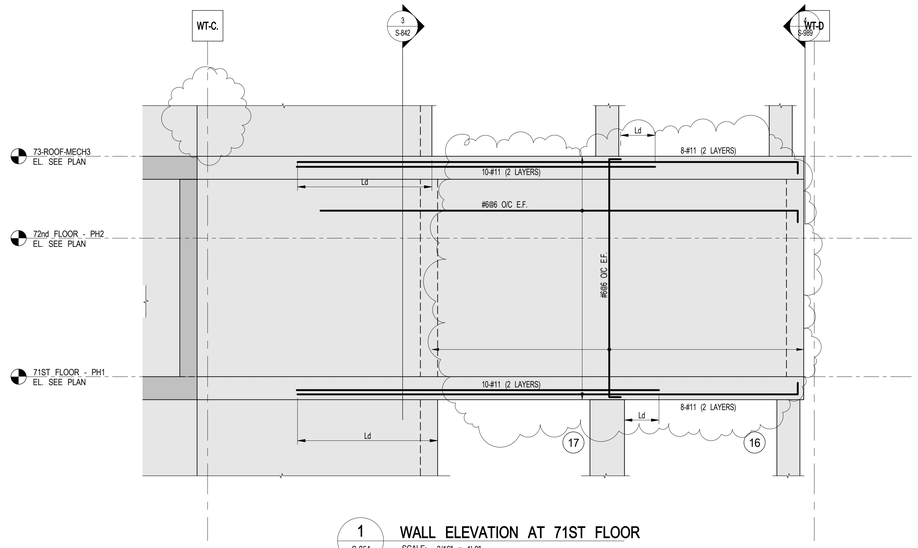

1 S-854 WALL ELEVATION AT 71ST FLOOR
SCALE: 3/16" = 1'-0"

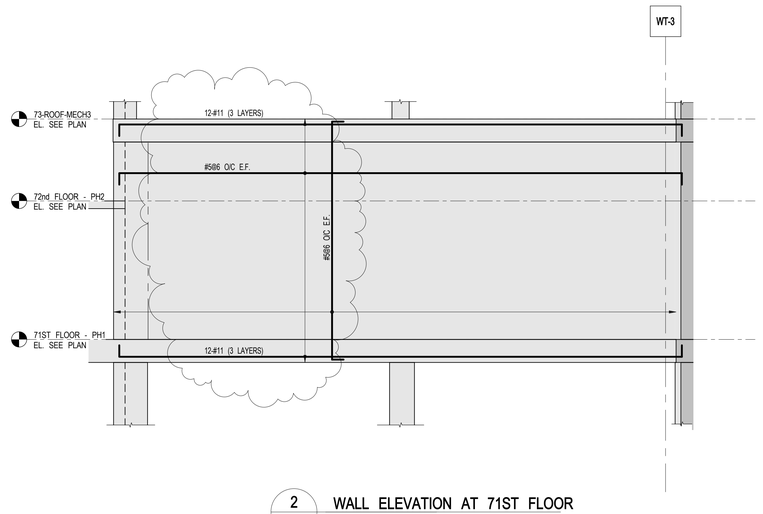

2 S-854 WALL ELEVATION AT 71ST FLOOR
SCALE: 3/16" = 1'-0"

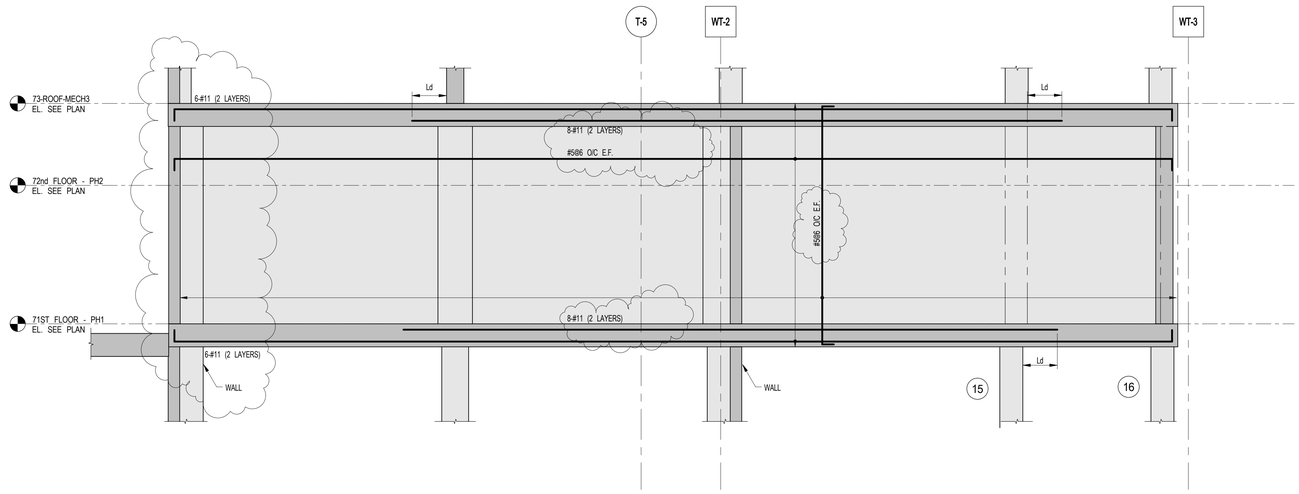

3 S-854 WALL ELEVATION AT 71ST FLOOR
SCALE: 3/16" = 1'-0"
NOTES:
1. ALL #11 BARS ARE GRADE 75 KSI.

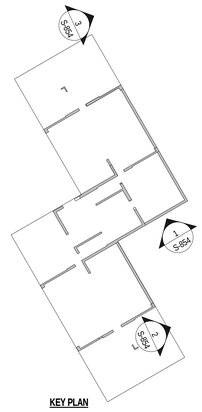

KEY PLAN

KEY PLAN:

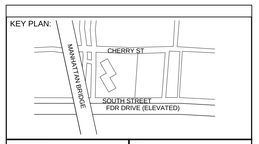

PROJECT NORTH

TRUE NORTH

DEVELOPER:
EXTELL DEVELOPMENT COMPANY
805 Third Ave, 7th Floor
New York, NY 10022
TEL: 212-712-6000 FAX: 212-712-6100

ARCHITECT OF RECORD:
AAI ARCHITECTS, P.C.
14 Wall Street, 2nd Floor
New York, NY 10005
TEL: 212-964-4040 FAX: 212-964-4090

INTERIOR DESIGNER:
MEYER DAVIS
180 Varick St, suite 404
New York, NY 10014
TEL: 212-627-5574

LANDSCAPE DESIGNER:
WEST 8 URBAN DESIGN & LANDSCAPE ARCHITECTURE P.C.
333 Hudson Street, Suite 905
New York, NY 10013
TEL: 212-285-0088 FAX: 212-285-0228

STRUCTURAL ENGINEERS:
WSP
228 East 45th Street
New York, NY 10017
TEL: 212-687-9888 FAX: 646-487-5501

MEP ENGINEERS:
ICOR ASSOCIATES, LLC
485 C Route 1 South, Suite 200
Iseline, NJ 08830
TEL: 908-272-3300 FAX: 908-272-4440

GEOTECHNICAL ENGINEERS:
LANGAN ENGINEERING & ENVIRONMENTAL SERVICES
21 Penn Plaza - 360 West 31st Street, 8th Floor
New York, NY 10001
TEL: 212.479.5400 FAX: 212.479.5444

No.	DESCRIPTION:	DATE:
	CONCRETE BID PACKAGE	03-06-15
	ISSUED FOR FILING	07-28-15
	80% CONSTRUCTION DOCUMENTS	08-14-15
	ASI #13	08-26-15
	90% CONSTRUCTION DOCUMENTS	01-15-16
	ISSUE FOR CONSTRUCTION	03-18-16
1	ISSUED FOR FILING	05-22-17

Discrepancies must be reported immediately to the Architect before proceeding. Only figured dimensions are to be used. Contractors must check all dimensions on site. This drawing is protected by copyright.

ALL DIMENSIONS ARE SHOWN IN IMPERIAL.

CONSULTANT:
WSP

PROJECT:
252 SOUTH STREET
NEW YORK, NY

DRAWING TITLE:
OUTRIGGER WALLS ELEVATIONS AT 71ST FLOOR

SEAL & SIGNATURE:
STATE OF NEW YORK
AHMAD RAHMAN
No. 065537
LICENSED PROFESSIONAL ENGINEER

DATE:	03/06/15
PROJECT No:	1302510
DRAWN: CAD	REV:
CHK: CL	
SCALE: As indicated	
DWG No:	S-854.01
DOB PAGE No:	of

DOB EMPLOYEE STAMP:
Tina Mathew, RA
APPROVED
Under Directive 2 of 1975
AMENDED APPLICATION
Date: 10/23/2017
NYC Development Hub

DOB B-SCAN:

30" x 42" Arch E1 - SHEET SIZE

FILE NAME:
PLOT DATE:

DEPT OF BLDGS121105539 Job Number
IES1457148897 Scan Code
30" x 42" Arch E1 SHEET SIZE

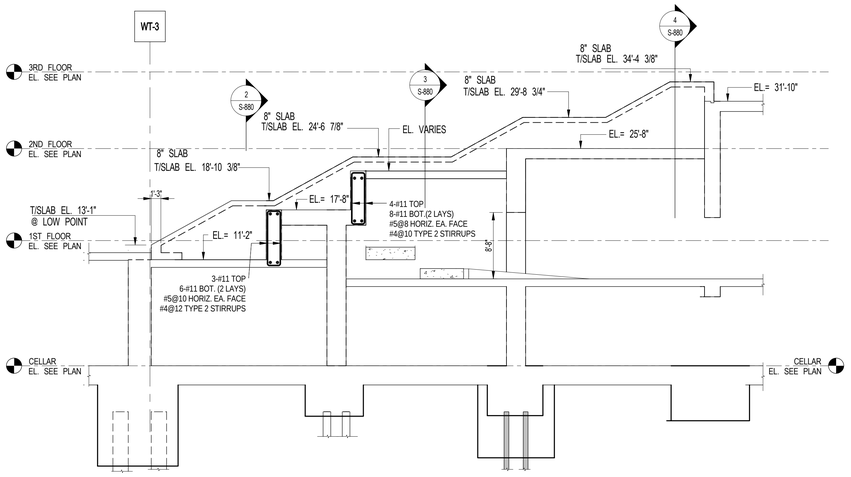

1 S-880 **STAIR ELEVATION**
SCALE: 1/8" = 1'-0"
NOTE:
SLAB REINF. NOT SHOWN

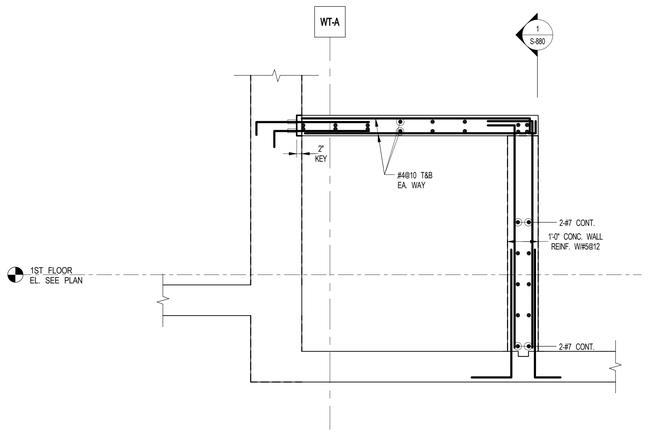

2 S-880 **SECTION SLOPE CROSS 1**
SCALE: 1/2" = 1'-0"
NOTE:
SLAB REINF. NOT SHOWN

3 S-880 **SECTION SLOPE CROSS 2**
SCALE: 1/2" = 1'-0"
NOTE:
SLAB REINF. NOT SHOWN

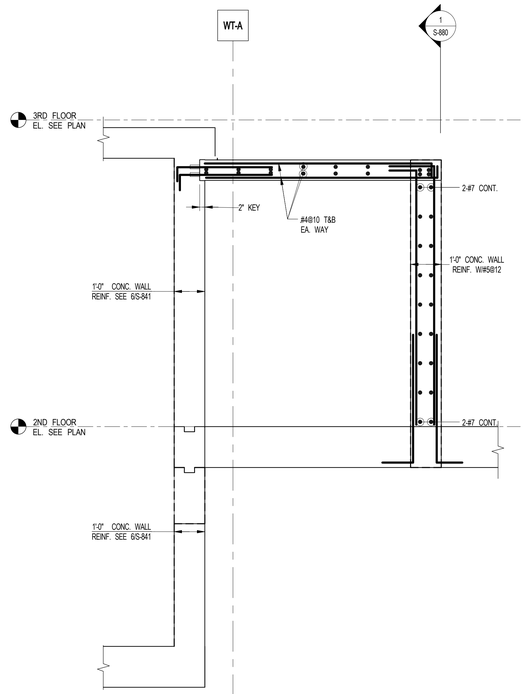

4 S-880 **SECTION SLOPE CROSS 2**
SCALE: 1/2" = 1'-0"
NOTE:
SLAB REINF. NOT SHOWN

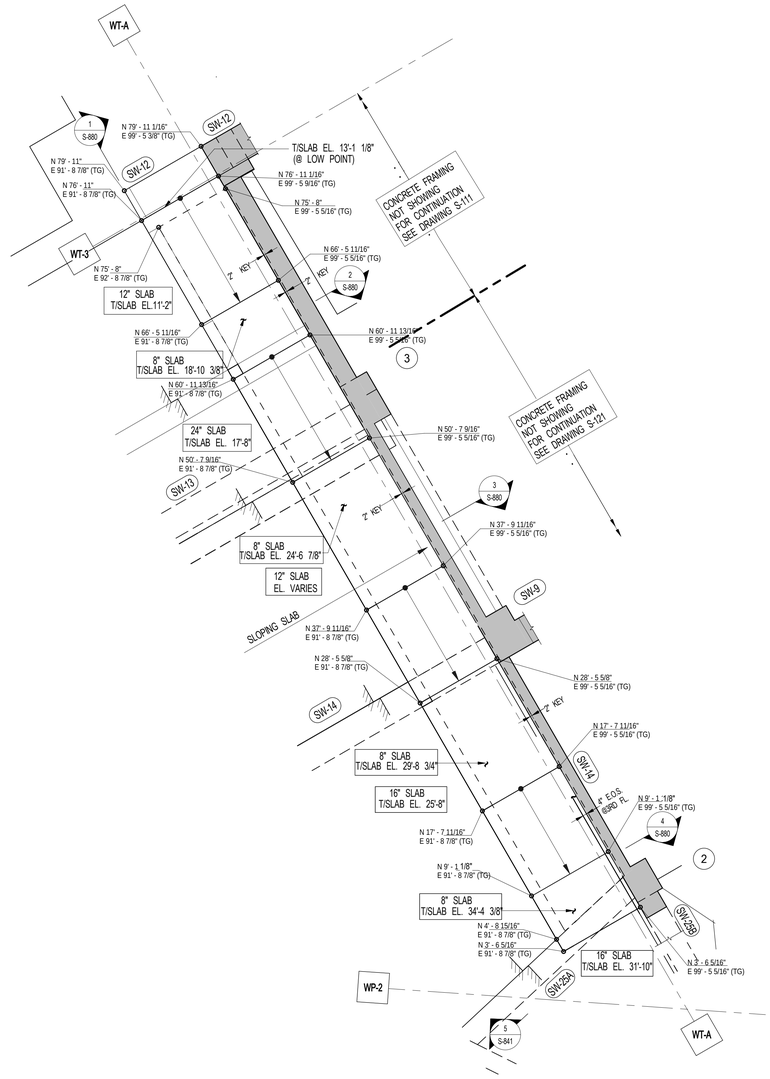

5 S-880 **(TOPIARY GARDEN) STAIR- GENERAL ARRANGEMENT PLAN**
SCALE: 3/16" = 1'-0"

KEY PLAN:

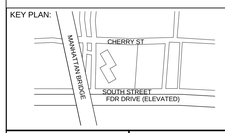

PROJECT NORTH | TRUE NORTH

DEVELOPER:
EXTELL DEVELOPMENT COMPANY
805 Third Ave, 7th Floor
New York, NY 10022
TEL: 212-712-6000 FAX: 212-712-6100

ARCHITECT OF RECORD:
AAI ARCHITECTS, P.C.
14 Wall Street, 2nd Floor
New York, NY 10005
TEL: 212-964-4040 FAX: 212-964-4090

INTERIOR DESIGNER:
MEYER DAVIS
180 Varick St, suite 404
New York, NY 10014
TEL: 212-627-5574

LANDSCAPE DESIGNER:
WEST 8 URBAN DESIGN & LANDSCAPE ARCHITECTURE P.C.
333 Hudson Street, Suite 905
New York, NY 10013
TEL: 212-285-0088 FAX: 212-285-0228

STRUCTURAL ENGINEERS:
WSP
228 East 45th Street
New York, NY 10017
TEL: 212-687-9888 FAX: 646-487-5501

MEP ENGINEERS:
ICOR ASSOCIATES, LLC
485 C Route 1 South, Suite 200
Iseline, NJ 08830
TEL: 908-272-3300 FAX: 908-272-4440

GEOTECHNICAL ENGINEERS:
LANGAN ENGINEERING & ENVIRONMENTAL SERVICES
21 Penn Plaza - 360 West 31st Street, 8th Floor
New York, NY 10001
TEL: 212.479.5400 FAX: 212.479.5444

No.	DESCRIPTION:	DATE:
	80% CONSTRUCTION DOCUMENTS	08-14-15
	90% CONSTRUCTION DOCUMENTS	01-15-16
	ASI #58	03-04-16
1	ASI#61	04-22-16
	ISSUED FOR FILING	05-22-17

Discrepancies must be reported immediately to the Architect before proceeding. Only figured dimensions are to be used. Contractors must check all dimensions on site. This drawing is protected by copyright.

ALL DIMENSIONS ARE SHOWN IN IMPERIAL.

CONSULTANT: WSP

PROJECT:
252 SOUTH STREET
NEW YORK, NY

DRAWING TITLE:
STAIR SECTIONS AND DETAILS

SEAL & SIGNATURE:

DATE: 08/12/15
PROJECT No: 1302510
DRAWN: CAD REV:
CHK: CL
SCALE: As indicated
DWG No: **S-880.00**
DOB PAGE No: of

DOB EMPLOYEE STAMP:

DOB B-SCAN:

FILE NAME:
PLOT DATE:

DEPT OF BLDGS121185539 Job Number
E320994760329 Scan Code

30" x 42" Arch E1 SHEET SIZE

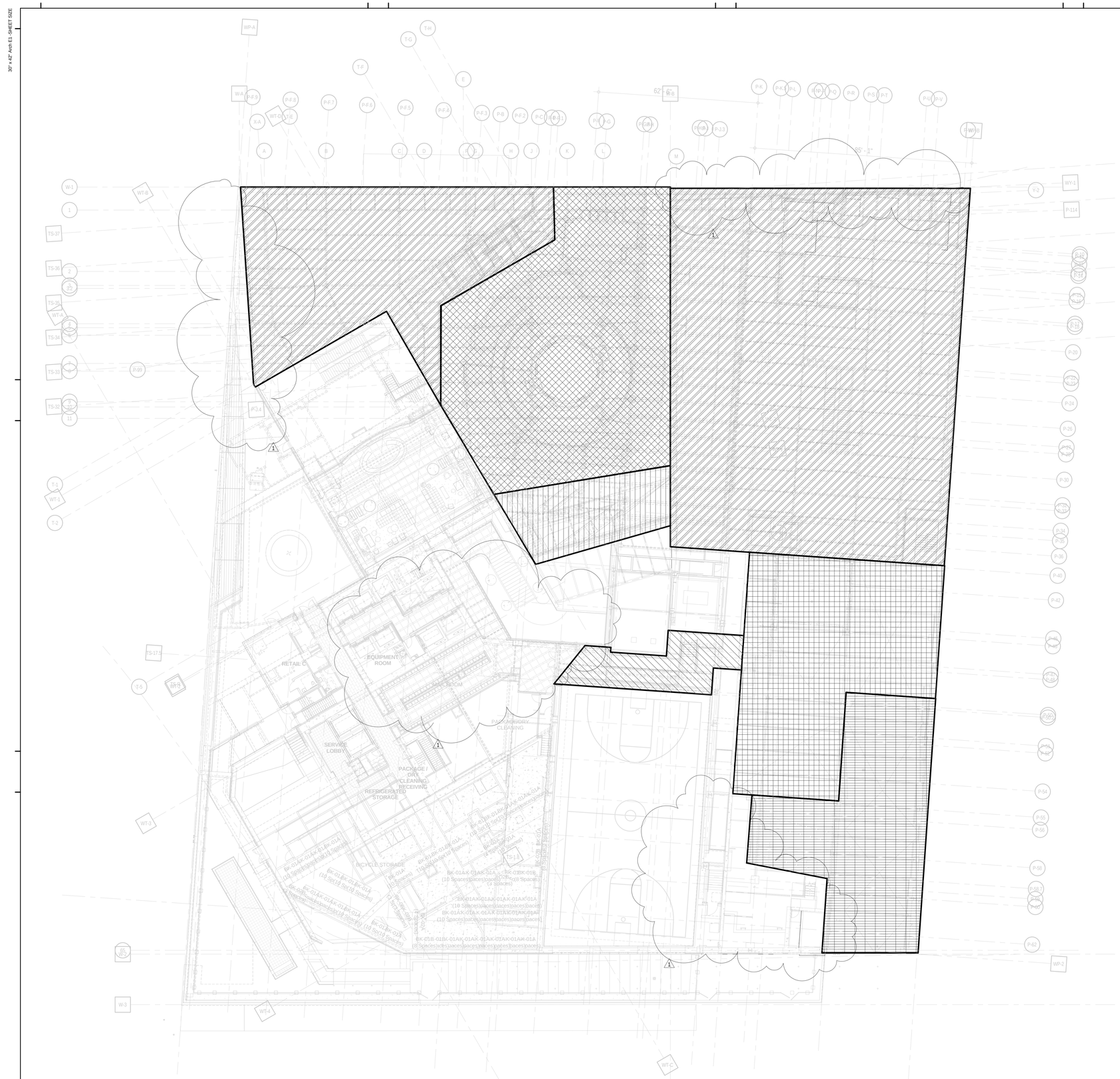

1 S-900

1ST FLOOR LOADING DIAGRAM

SCALE: 1/16" = 1'-0"

GROUND FLOOR LOADING SCHEDULE (STEEL FRAMED AREA) (NOTE A)

AREA	SUPERIMPOSED DEAD LOAD					(NOTE B) LIVE LOAD	DESCRIPTION	REMARKS
	FINISH/FILL	BUILT-UP	MISC.	MEP +CEILING	PARTITION			
	lbs/sq.ft	lbs/sq.ft	lbs/sq.ft	lbs/sq.ft	lbs/sq.ft	lbs/sq.ft		
	12		10	40	20	100	RETAIL AREA	
		152		40		600	ENTRANCE DRIVEWAY (NOTE C)	
		480				150	SUMAC MEADER (NOTE C)	
	10		10	40		100	CORRIDOR	
			10	40	10	110	PARKING	
			10	40		600	TRUCK LOADING (NOTE C)	
				40	20	100	STORAGE	
		480				150	LANDSCAPE (NOTE C)	
				40	20	150	MECH. ROOM	

NOTES:
A. DEAD LOAD BASED ON SLAB CONSTRUCTION AND FRAMING SELF-WEIGHT AS INDICATED ON THE CORRESPONDING FRAMING
B. LIVE LOAD REDUCTION IS CONSIDERED BASED ON NYC BUILDING CODE.
C. SEE TYPICAL SLAB ON METAL DECK DETAIL WHERE LIVE LOAD + SUPERIMPOSED DEAD LOAD LARGER THAN 400 PSF.

KEY PLAN:

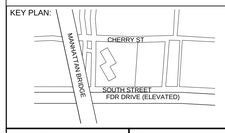

PROJECT NORTH

TRUE NORTH

DEVELOPER:
EXTELL DEVELOPMENT COMPANY
805 Third Ave, 7th Floor
New York, NY 10022
TEL: 212-712-6000 FAX: 212-712-6100

ARCHITECT OF RECORD:
AAI ARCHITECTS, P.C.
14 Wall Street, 2nd Floor
New York, NY 10005
TEL: 212-964-4040 FAX: 212-964-4090

INTERIOR DESIGNER:
MEYER DAVIS
180 Varick St, suite 404
New York, NY 10014
TEL: 212-627-5574

LANDSCAPE DESIGNER:
WEST 8 URBAN DESIGN & LANDSCAPE ARCHITECTURE P.C.
333 Hudson Street, Suite 905
New York, NY 10013
TEL: 212-285-0088 FAX: 212-285-0228

STRUCTURAL ENGINEERS:
WSP
228 East 45th Street
New York, NY 10017
TEL: 212-687-9888 FAX: 646-487-5501

MEP ENGINEERS:
ICOR ASSOCIATES, LLC
485 C Route 1 South, Suite 200
Iseline, NJ 08830
TEL: 908-272-3300 FAX: 908-272-4440

GEOTECHNICAL ENGINEERS:
LANGAN ENGINEERING & ENVIRONMENTAL SERVICES
21 Penn Plaza - 360 West 31st Street, 8th Floor
New York, NY 10001
TEL: 212.479.5400 FAX: 212.479.5444

No.	DESCRIPTION:	DATE:
	50% CONSTRUCTION DOCUMENTS	04-08-15
	ISSUED FOR FILING	07-28-15
1	ASI #75	10-10-16
	ISSUED FOR FILING	05-22-17

Discrepancies must be reported immediately to the Architect before proceeding. Only figured dimensions are to be used. Contractors must check all dimensions on site. This drawing is protected by copyright.

ALL DIMENSIONS ARE SHOWN IN IMPERIAL.

CONSULTANT:
WSP

PROJECT:
252 SOUTH STREET
NEW YORK, NY

DRAWING TITLE:
1ST FLOOR LOADING DIAGRAM

SEAL & SIGNATURE:

DATE:	04/08/15
PROJECT No:	1302510
DRAWN: CAD	REV:
CHK: CL	
SCALE: As indicated	
DWG No:	**S-900.01**
DOB PAGE No:	of

DOB EMPLOYEE STAMP:

Tina Mathew, RA
Building Code
APPROVED
Under Directive 2 of 1975
AMENDED APPLICATION
Date: 10/23/2017
NYC Development Hub

DOB B-SCAN:

FILE NAME:
PLOT DATE:

DEPT OF BLDGS121185539 Job Number
E1566357004 Scan Code

30" x 42" Arch E1 SHEET SIZE

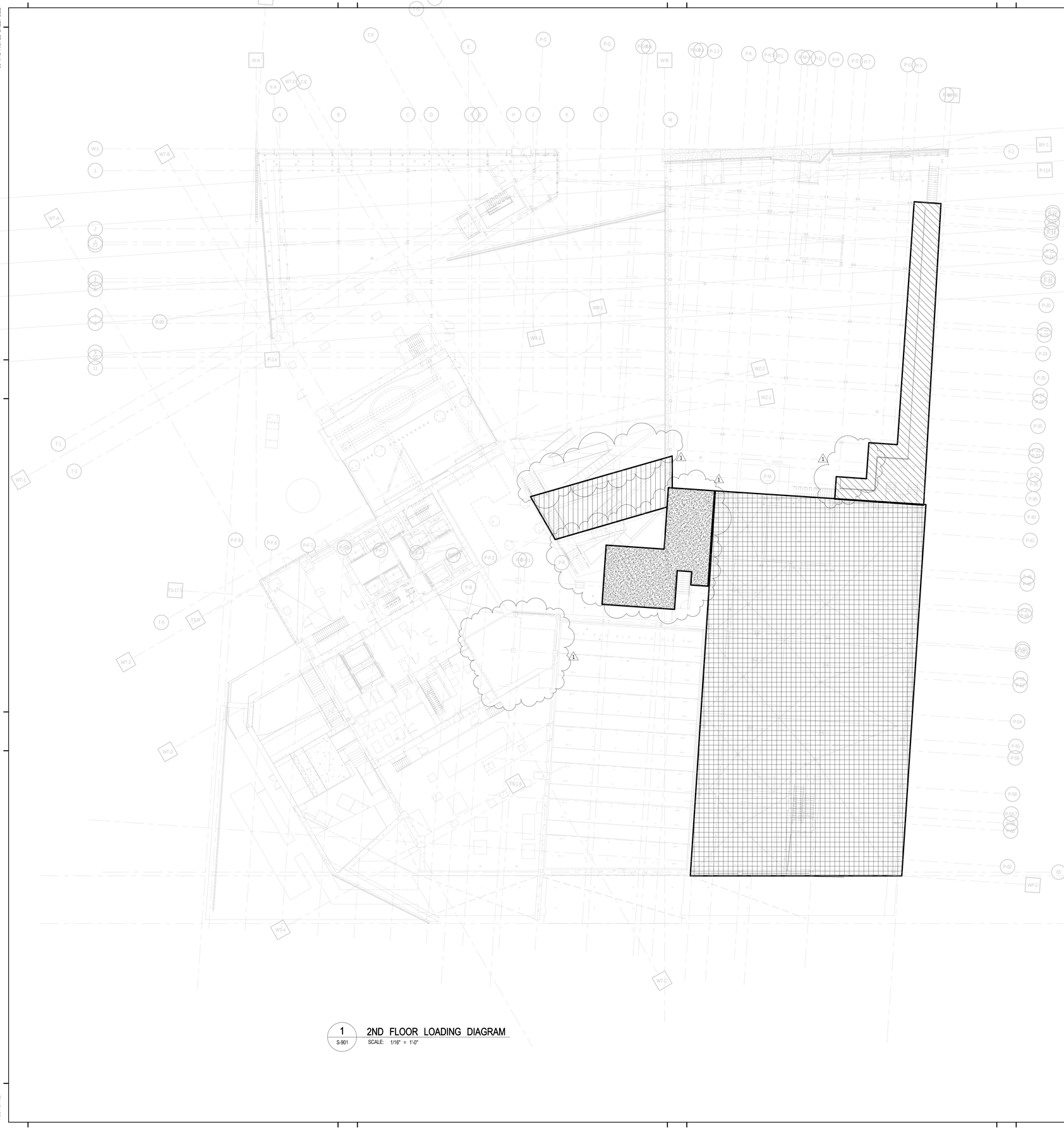

1 S-901 2ND FLOOR LOADING DIAGRAM
SCALE: 1/16" = 1'-0"

2ND FLOOR LOADING SCHEDULE (STEEL FRAMED AREA) (NOTE A)							
AREA	SUPERIMPOSED DEAD LOAD				(NOTE B) LIVE LOAD	DESCRIPTION	REMARKS
	FINISH/FILL	BUILT-UP	MISC.	MEP +CEILING	PARTITION		
	lbs/sq.ft	lbs/sq.ft	lbs/sq.ft	lbs/sq.ft	lbs/sq.ft		
		480				150	SUMAC MEADER (NOTE C)	
				40	20	150	MECH. ROOM	
	10		10	40		100	CORRIDOR	
			10	40	10	110	PARKING	

NOTES:
A. DEAD LOAD BASED ON SLAB CONSTRUCTION AND FRAMING SELF-WEIGHT AS INDICATED ON THE CORRESPONDING FRAMING
B. LIVE LOAD REDUCTION IS CONSIDERED BASED ON NYC BUILDING CODE
C. SEE TYPICAL SLAB ON METAL DECK DETAIL WHERE LIVE LOAD + SUPERIMPOSED DEAD LOAD LARGER THAN 400 PSF.

KEY PLAN:

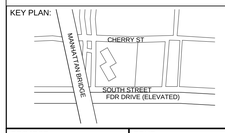

PROJECT NORTH

TRUE NORTH

DEVELOPER:
EXTELL DEVELOPMENT COMPANY
805 Third Ave, 7th Floor
New York, NY 10022
TEL: 212-712-6000 FAX: 212-712-6100

ARCHITECT OF RECORD:
AAI ARCHITECTS, P.C.
14 Wall Street, 2nd Floor
New York, NY 10005
TEL: 212-964-4040 FAX: 212-964-4090

INTERIOR DESIGNER:
MEYER DAVIS
180 Varick St, suite 404
New York, NY 10014
TEL: 212-627-5574

LANDSCAPE DESIGNER:
WEST 8 URBAN DESIGN & LANDSCAPE ARCHITECTURE P.C.
333 Hudson Street, Suite 905
New York, NY 10013
TEL: 212-285-0088 FAX: 212-285-0228

STRUCTURAL ENGINEERS:
WSP
228 East 45th Street
New York, NY 10017
TEL: 212-687-9888 FAX: 646-487-5501

MEP ENGINEERS:
ICOR ASSOCIATES, LLC
485 C Route 1 South, Suite 200
Iseline, NJ 08830
TEL: 908-272-3300 FAX: 908-272-4440

GEOTECHNICAL ENGINEERS:
LANGAN ENGINEERING & ENVIRONMENTAL SERVICES
21 Penn Plaza - 360 West 31st Street, 8th Floor
New York, NY 10001
TEL: 212.479.5400 FAX: 212.479.5444

No.	DESCRIPTION:	DATE:
	50% CONSTRUCTION DOCUMENTS	04-08-15
	ISSUED FOR FILING	07-28-15
1	ASI #75	10-10-16
	ISSUED FOR FILING	05-22-17

Discrepancies must be reported immediately to the Architect before proceeding. Only figured dimensions are to be used. Contractors must check all dimensions on site. This drawing is protected by copyright.

ALL DIMENSIONS ARE SHOWN IN IMPERIAL.

CONSULTANT:
WSP

PROJECT:
252 SOUTH STREET
NEW YORK, NY

DRAWING TITLE:
2ND FLOOR LOADING DIAGRAM

SEAL & SIGNATURE:
STATE OF NEW YORK ANMAD RASHDAN No. 085857 LICENSED PROFESSIONAL ENGINEER

DATE: 04/08/15
PROJECT No: 1302510
DRAWN: CAD REV:
CHK: CL
SCALE: As indicated
DWG No:
S-901.01
DOB PAGE No: of

DOB EMPLOYEE STAMP:
Tina Mathew, RA
APPROVED
Under Directive 1 of 1975
AMENDED APPLICATION
Date: 10/23/2017
NYC Development Hub

DOB B-SCAN:

FILE NAME:
PLOT DATE:

DEPT OF BLDGS 121185528 Job Number
ES0500024923 Scan Code

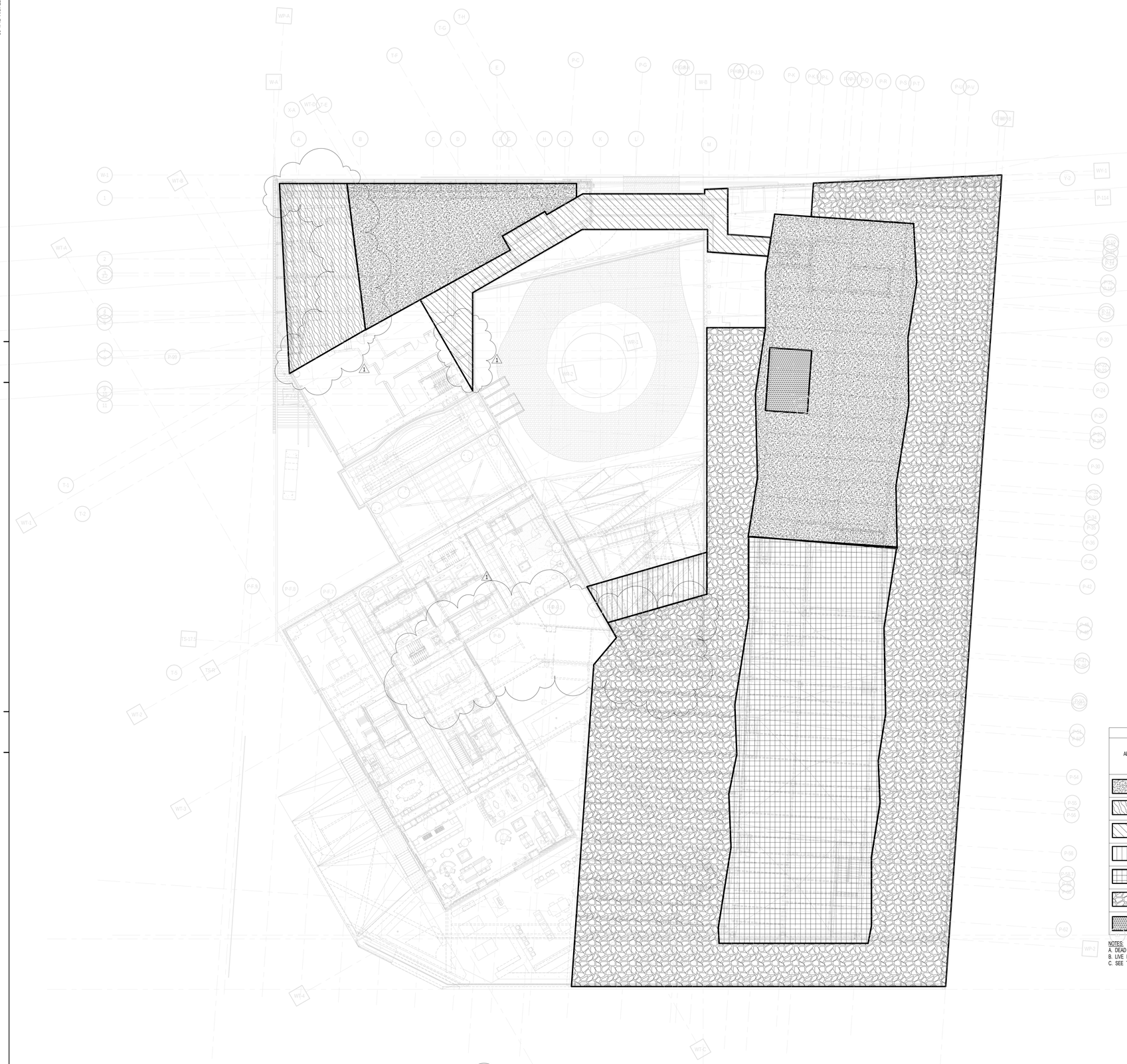

1 S-902 3RD FLOOR LOADING DIAGRAM
SCALE: 1/16" = 1'-0"

3RD FLOOR LOADING SCHEDULE (STEEL FRAMED AREA) (NOTE A)

AREA	SUPERIMPOSED DEAD LOAD					(NOTE B) LIVE LOAD	DESCRIPTION	REMARKS
	FINISH/FILL	BUILT-UP	MISC.	MEP +CEILING	PARTITION			
	lbs/sq.ft	lbs/sq.ft	lbs/sq.ft	lbs/sq.ft	lbs/sq.ft	lbs/sq.ft		
				40	20	150	MECH. ROOM	
		780		40		600	TRANSFORMER VAULT (NOTE C)	
	10		10	40		100	CORRIDOR	
		480				150	SUMAC MEADER (NOTE C)	
			10	40	10	110	PARKING	
		480				150	LANDSCAPE (NOTE C)	
		190		40	20	1250	FIRE TANK (NOTE C)	

NOTES:
A. DEAD LOAD BASED ON SLAB CONSTRUCTION AND FRAMING SELF-WEIGHT AS INDICATED ON THE CORRES|PONDING FRAMING
B. LIVE LOAD REDUCTION IS CONSIDERED BASED ON NYC BUILDING CODE.
C. SEE TYPICAL SLAB ON METAL DECK DETAIL WHERE LIVE LOAD + SUPERIMPOSED DEAD LOAD LARGER THAN 400 PSF.

KEY PLAN:

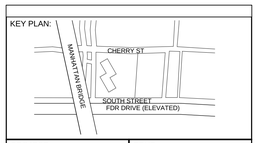

PROJECT NORTH

TRUE NORTH

DEVELOPER:
EXTELL DEVELOPMENT COMPANY
805 Third Ave, 7th Floor
New York, NY 10022
TEL: 212-712-6000 FAX: 212-712-6100

ARCHITECT OF RECORD:
AAI ARCHITECTS, P.C.
14 Wall Street, 2nd Floor
New York, NY 10005
TEL: 212-964-4040 FAX: 212-964-4090

INTERIOR DESIGNER:
MEYER DAVIS
180 Varick St, suite 404
New York, NY 10014
TEL: 212-627-5574

LANDSCAPE DESIGNER:
WEST 8 URBAN DESIGN & LANDSCAPE ARCHITECTURE P.C.
333 Hudson Street, Suite 905
New York, NY 10013
TEL: 212-285-0088 FAX: 212-285-0228

STRUCTURAL ENGINEERS:
WSP
228 East 45th Street
New York, NY 10017
TEL: 212-687-9888 FAX: 646-487-5501

MEP ENGINEERS:
ICOR ASSOCIATES, LLC
485 C Route 1 South, Suite 200
Iseline, NJ 08830
TEL: 908-272-3300 FAX: 908-272-4440

GEOTECHNICAL ENGINEERS:
LANGAN ENGINEERING & ENVIRONMENTAL SERVICES
21 Penn Plaza - 360 West 31st Street, 8th Floor
New York, NY 10001
TEL: 212.479.5400 FAX: 212.479.5444

No.	DESCRIPTION:	DATE:
	50% CONSTRUCTION DOCUMENTS	04-08-15
	ISSUED FOR FILING	07-28-15
1	ASI #75	10-10-16
	ISSUED FOR FILING	05-22-17

Discrepancies must be reported immediately to the Architect before proceeding. Only figured dimensions are to be used. Contractors must check all dimensions on site. This drawing is protected by copyright.

ALL DIMENSIONS ARE SHOWN IN IMPERIAL.

CONSULTANT:
WSP

PROJECT:
252 SOUTH STREET
NEW YORK, NY

DRAWING TITLE:
3RD FLOOR LOADING DIAGRAM

SEAL & SIGNATURE:

DATE:	04/08/15
PROJECT No:	1302510
DRAWN: CAD	REV:
CHK: CL	
SCALE: As indicated	
DWG No:	S-902.01
DOB PAGE No:	of

DOB EMPLOYEE STAMP:

DOB B-SCAN:

30" x 42" Arch E1 - SHEET SIZE

FILE NAME:
PLOT DATE:

DEPT OF BLDGS121185539 Job Number
E395950B237 Scan Code
30" x 42" Arch E1 SHEET SIZE

1 S-903 4TH FLOOR LOADING DIAGRAM
SCALE: 1/16" = 1'-0"

4TH FLOOR LOADING SCHEDULE (STEEL FRAMED AREA) (NOTE A)								
AREA	SUPERIMPOSED DEAD LOAD					(NOTE B) LIVE LOAD	DESCRIPTION	REMARKS
	FINISH/FILL	BUILT-UP	MISC.	MEP +CEILING	PARTITION			
	lbs/sq.ft	lbs/sq.ft	lbs/sq.ft	lbs/sq.ft	lbs/sq.ft	lbs/sq.ft		
				40	20	150	MECH ROOM	
		600		40	10	70	NETWORK COMP (NOTE C)	
	10		10	40		70	APARTMENT AT TOWER TRANSFER SLAB (NOTE D)	

NOTES:
A. DEAD LOAD BASED ON SLAB CONSTRUCTION AND FRAMING SELF-WEIGHT AS INDICATED ON THE CORRESPONDING FRAMING
B. LIVE LOAD REDUCTION IS CONSIDERED BASED ON NYC BUILDING CODE.
C. SEE TYPICAL SLAB ON METAL DECK DETAIL WHERE LIVE LOAD + SUPERIMPOSED DEAD LOAD LARGER THAN 400 PSF.
D. REFER TO S-003 THRU S-006 BY SPECIALITY ENGINEERS DATED 2015.01.30 FOR ADDL LOAD

KEY PLAN:

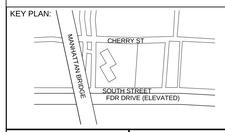

PROJECT NORTH

TRUE NORTH

DEVELOPER:
EXTELL DEVELOPMENT COMPANY
805 Third Ave, 7th Floor
New York, NY 10022
TEL: 212-712-6000 FAX: 212-712-6100

ARCHITECT OF RECORD:
AAI ARCHITECTS, P.C.
14 Wall Street, 2nd Floor
New York, NY 10005
TEL: 212-964-4040 FAX: 212-964-4090

INTERIOR DESIGNER:
MEYER DAVIS
180 Varick St, suite 404
New York, NY 10014
TEL: 212-627-5574

LANDSCAPE DESIGNER:
WEST 8 URBAN DESIGN & LANDSCAPE ARCHITECTURE P.C.
333 Hudson Street, Suite 905
New York, NY 10013
TEL: 212-285-0088 FAX: 212-285-0228

STRUCTURAL ENGINEERS:
WSP
228 East 45th Street
New York, NY 10017
TEL: 212-687-9888 FAX: 646-487-5501

MEP ENGINEERS:
ICOR ASSOCIATES, LLC
485 C Route 1 South, Suite 200
Iselin, NJ 08830
TEL: 908-272-3300 FAX: 908-272-4440

GEOTECHNICAL ENGINEERS:
LANGAN ENGINEERING & ENVIRONMENTAL SERVICES
21 Penn Plaza - 360 West 31st Street, 8th Floor
New York, NY 10001
TEL: 212.479.5400 FAX: 212.479.5444

No.	DESCRIPTION:	DATE:
	50% CONSTRUCTION DOCUMENTS	04-08-15
	ISSUED FOR FILING	07-28-15
	ISSUED FOR FILING	05-22-17

Discrepancies must be reported immediately to the Architect before proceeding. Only figured dimensions are to be used. Contractors must check all dimensions on site. This drawing is protected by copyright.

ALL DIMENSIONS ARE SHOWN IN IMPERIAL.

CONSULTANT:
WSP

PROJECT:
252 SOUTH STREET
NEW YORK, NY

DRAWING TITLE:
4TH FLOOR LOADING DIAGRAM

SEAL & SIGNATURE:
STATE OF NEW YORK · AHMAD RAHIMIAN · No. 065502 · LICENSED PROFESSIONAL ENGINEER

DATE:	04/08/15
PROJECT No:	1302510
DRAWN: CAD	REV:
CHK: CL	
SCALE: As indicated	
DWG No:	**S-903.01**
DOB PAGE No:	of

DOB EMPLOYEE STAMP:
Tina Mathew, RA
APPROVED
Under Directive 2 of 1975
AMENDED APPLICATION
Date: 10/23/2017
NYC Development Hub

DOB B-SCAN:

FILE NAME:
PLOT DATE:

DEPT OF BLDGS 121185528 Job Number
ES707972021 Scan Code

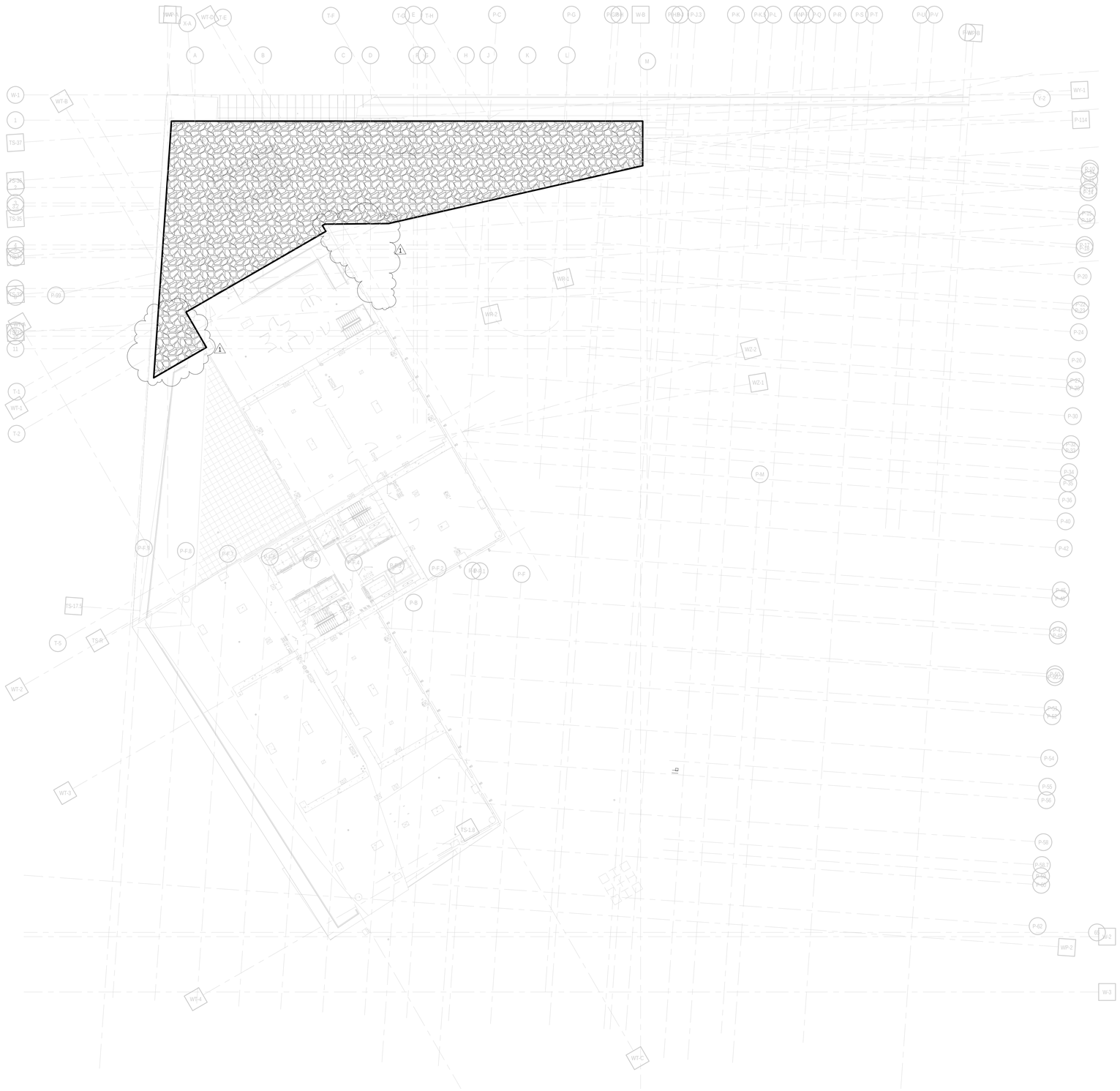

1 S-904 5TH FLOOR LOADING DIAGRAM
SCALE: 1/16" = 1'-0"

5TH FLOOR LOADING SCHEDULE (STEEL FRAMED AREA) (NOTE A)								
AREA	SUPERIMPOSED DEAD LOAD					(NOTE B) LIVE LOAD	DESCRIPTION	REMARKS
	FINISH/FILL	BUILT-UP	MISC.	MEP +CEILING	PARTITION			
	lbs/sq.ft	lbs/sq.ft	lbs/sq.ft	lbs/sq.ft	lbs/sq.ft	lbs/sq.ft		
		480				150	TEA GARDEN/LANDSCAPE (NOTE C)	

NOTES:
A. DEAD LOAD BASED ON SLAB CONSTRUCTION AND FRAMING SELF-WEIGHT AS INDICATED ON THE CORRES[PONDING FRAMING
B. LIVE LOAD REDUCTION IS CONSIDERED BASED ON NYC BUILDING CODE.
C. SEE TYPICAL SLAB ON METAL DECK DETAIL WHERE LIVE LOAD + SUPERIMPOSED DEAD LOAD LARGER THAN 400 PSF.

KEY PLAN:

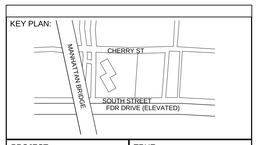

PROJECT NORTH

TRUE NORTH

DEVELOPER:
EXTELL DEVELOPMENT COMPANY
805 Third Ave, 7th Floor
New York, NY 10022
TEL: 212-712-6000 FAX: 212-712-6100

ARCHITECT OF RECORD:
AAI ARCHITECTS, P.C.
14 Wall Street, 2nd Floor
New York, NY 10005
TEL: 212-964-4040 FAX: 212-964-4090

INTERIOR DESIGNER:
MEYER DAVIS
180 Varick St, suite 404
New York, NY 10014
TEL: 212-627-5574

LANDSCAPE DESIGNER:
WEST 8 URBAN DESIGN & LANDSCAPE ARCHITECTURE P.C.
333 Hudson Street, Suite 905
New York, NY 10013
TEL: 212-285-0088 FAX: 212-285-0228

STRUCTURAL ENGINEERS:
WSP
228 East 45th Street
New York, NY 10017
TEL: 212-687-9888 FAX: 646-487-5501

MEP ENGINEERS:
ICOR ASSOCIATES, LLC
485 C Route 1 South, Suite 200
Iseline, NJ 08830
TEL: 908-272-3300 FAX: 908-272-4440

GEOTECHNICAL ENGINEERS:
LANGAN ENGINEERING & ENVIRONMENTAL SERVICES
21 Penn Plaza - 360 West 31st Street, 8th Floor
New York, NY 10001
TEL: 212.479.5400 FAX: 212.479.5444

No.	DESCRIPTION:	DATE:
	50% CONSTRUCTION DOCUMENTS	04-08-15
	ISSUED FOR FILING	07-28-15
1	ASI #75	10-10-16
	ISSUED FOR FILING	05-22-17

Discrepancies must be reported immediately to the Architect before proceeding. Only figured dimensions are to be used. Contractors must check all dimensions on site. This drawing is protected by copyright.

ALL DIMENSIONS ARE SHOWN IN IMPERIAL.

CONSULTANT:
WSP

PROJECT:
252 SOUTH STREET
NEW YORK, NY

DRAWING TITLE:
5TH FLOOR LOADING DIAGRAM

SEAL & SIGNATURE:

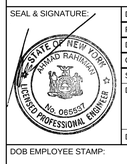

DATE:	04/08/15
PROJECT No:	1302510
DRAWN: CAD	REV:
CHK: CL	
SCALE: As indicated	
DWG No:	S-904.01
DOB PAGE No:	of

DOB EMPLOYEE STAMP:

DOB B-SCAN:

30" x 42" Arch E1 - SHEET SIZE

FILE NAME:
PLOT DATE:

DEPT OF BLDGS121185539 Job Number
E1512.1010864 Scan Code

30" x 42" Anti EL -SHEET SIZE

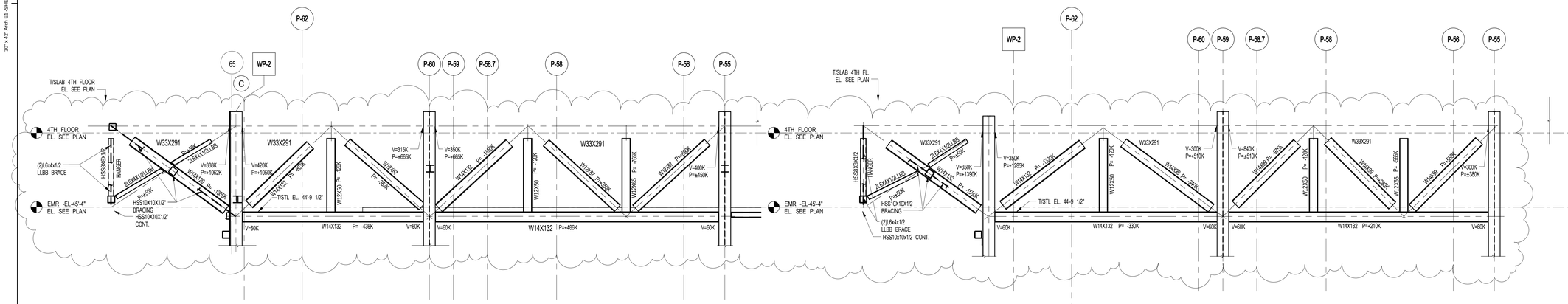

1 S-930 TRUSS 4A - GRIDLINE P-T
SCALE: 3/16" = 1'-0"

2 S-930 TRUSS 4B - GRIDLINE P-M
SCALE: 3/16" = 1'-0"

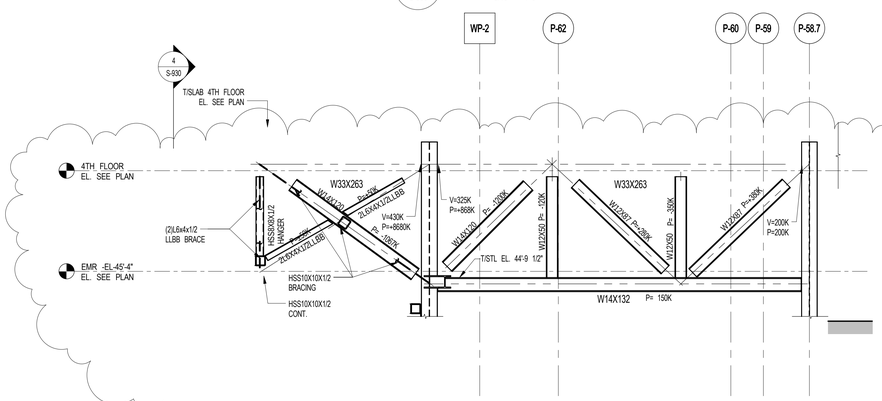

3 S-930 TRUSS 4C - AT GRID LINE P-K
SCALE: 3/16" = 1'-0"

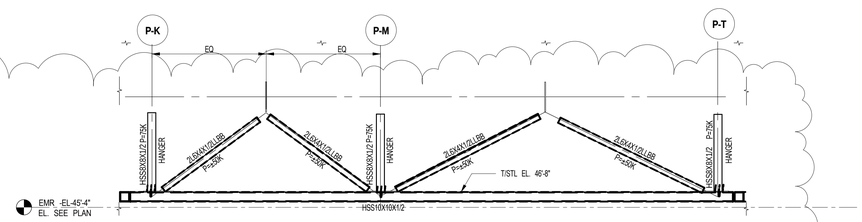

EMR -EL-45'-4" EL SEE PLAN

4 S-930 ELEVATION A-A
SCALE: 3/16" = 1'-0"

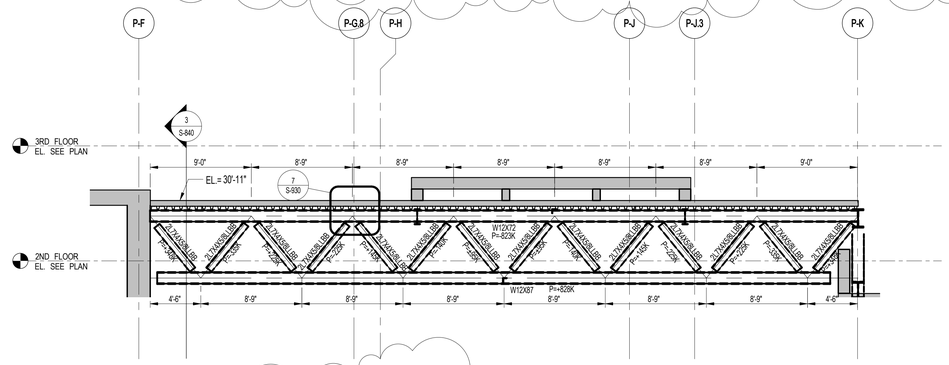

6 S-930 TRUSS SJ
SCALE: 3/16" = 1'-0"

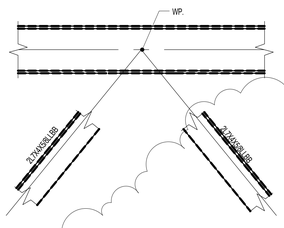

7 S-930 DETAIL
SCALE: 3/4" = 1'-0"

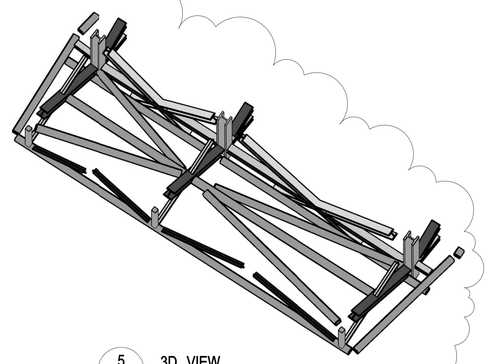

5 S-930 3D VIEW
SCALE:

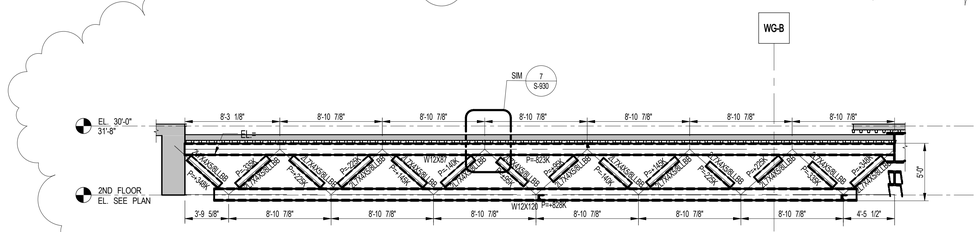

8 S-930 TRUSS SJ-1
SCALE: 3/16" = 1'-0"

NOTES:
1. P= +/- XX K -INDICATES AXIAL TENSION/ COMPRESION FORCE IN KIPS.
2. V= XX K -INDICATES VERTICAL SHEAR FORCE IN KIPS.

FILE NAME:
PLOT DATE:

KEY PLAN:

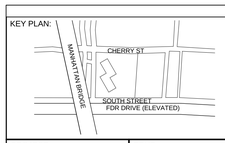

PROJECT NORTH | TRUE NORTH

DEVELOPER:
EXTELL DEVELOPMENT COMPANY
805 Third Ave, 7th Floor
New York, NY 10022
TEL: 212-712-6000 FAX: 212-712-6100

ARCHITECT OF RECORD:
AAI ARCHITECTS, P.C.
14 Wall Street, 2nd Floor
New York, NY 10005
TEL: 212-964-4040 FAX: 212-964-4090

INTERIOR DESIGNER:
MEYER DAVIS
180 Varick St, suite 404
New York, NY 10014
TEL: 212-627-5574

LANDSCAPE DESIGNER:
WEST 8 URBAN DESIGN & LANDSCAPE ARCHITECTURE P.C.
333 Hudson Street, Suite 905
New York, NY 10013
TEL: 212-285-0088 FAX: 212-285-0228

STRUCTURAL ENGINEERS:
WSP
228 East 45th Street
New York, NY 10017
TEL: 212-687-9888 FAX: 646-487-5501

MEP ENGINEERS:
ICOR ASSOCIATES, LLC
485 C Route 1 South, Suite 200
Iseline, NJ 08830
TEL: 908-272-3300 FAX: 908-272-4440

GEOTECHNICAL ENGINEERS:
LANGAN ENGINEERING & ENVIRONMENTAL SERVICES
21 Penn Plaza - 360 West 31st Street, 8th Floor
New York, NY 10001
TEL: 212.479.5400 FAX: 212.479.5444

No.	DESCRIPTION:	DATE:
	STEEL BID PACKAGE	02-24-15
	ADDENDUM #10	07-20-15
	ISSUED FOR FILING	07-28-15
	ASI #58	03-04-16
	ISSUE FOR CONSTRUCTION	03-18-16
1	ASI#61	04-22-16
2	ASI #76	10-28-16
3	ISSUED FOR FILING	05-22-17

Discrepancies must be reported immediately to the Architect before proceeding. Only figured dimensions are to be used. Contractors must check all dimensions on site. This drawing is protected by copyright.

ALL DIMENSIONS ARE SHOWN IN IMPERIAL.

CONSULTANT:
WSP

PROJECT:
252 SOUTH STREET
NEW YORK, NY

DRAWING TITLE:
TRUSS ELEVATIONS 1

SEAL & SIGNATURE:
STATE OF NEW YORK · AHMAD RASHIDIAN · No. 085457 · LICENSED PROFESSIONAL ENGINEER

DATE:	02/20/15
PROJECT No:	1302510
DRAWN: CAD	REV:
CHK: CL	
SCALE: As indicated	
DWG No:	**S-930.02**
DOB PAGE No:	of

DOB EMPLOYEE STAMP:
Tina Mathew, RA
APPROVED
Under Directive 1 of 1975
AMENDED APPLICATION
Date: 10/23/2017
NYC Development Hub

DOB B-SCAN:

DEPT OF BLDGS121185539 Job Number
ES145.381144 Scan Code
30" x 42" Anti El. SHEET SIZE

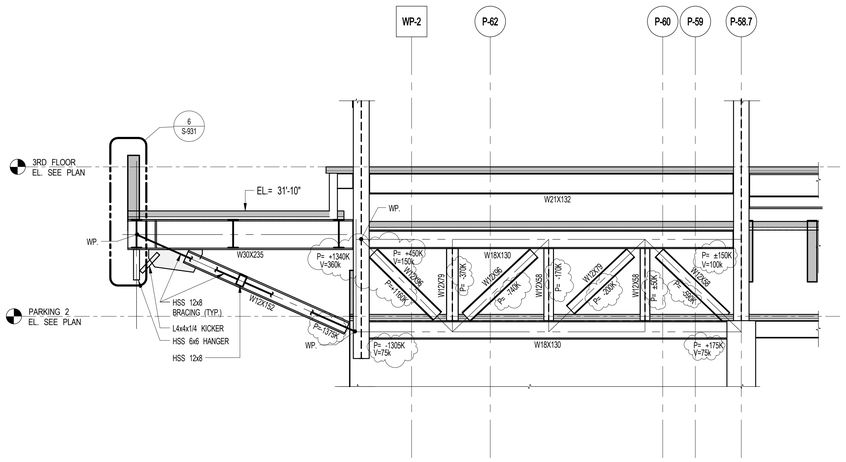

1 S-931 TRUSS 3D - SOUTH CANTILEVER FRAMING AT GRID LINE P-K
SCALE: 3/16" = 1'-0"

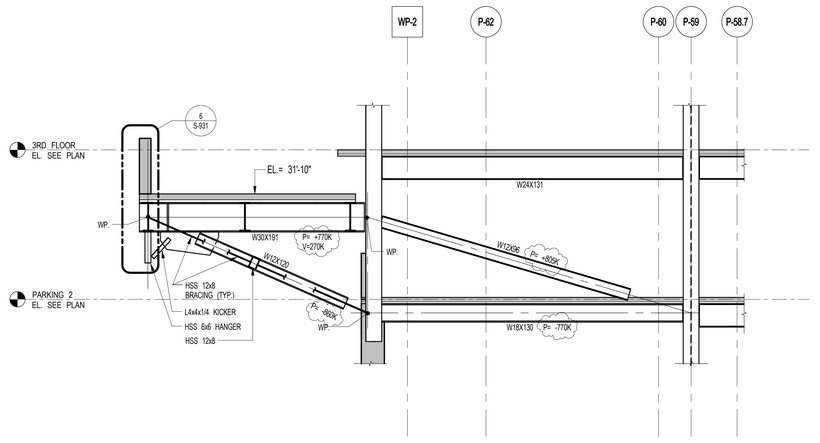

2 S-931 TRUSS 3C - SOUTH CANTILEVER FRAMING AT GRIDLINE P-M
SCALE: 3/16" = 1'-0"

3 S-931 TRUSS 3B - SOUTH CANTILEVER FRAMING AT GRIDLINE P-T
SCALE: 3/16" = 1'-0"

4 S-931 TRUSS 3A - SOUTH CANTILEVER FRAMING AT GRIDLINE P-W
SCALE: 3/16" = 1'-0"

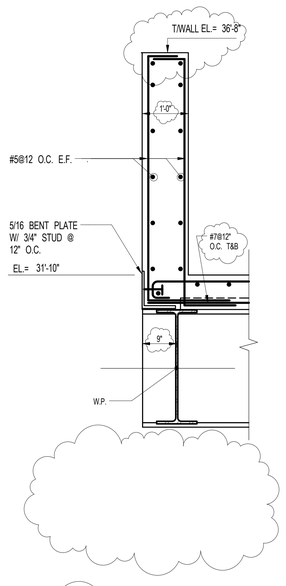

6 S-931 SECTION
SCALE: 3/4" = 1'-0"

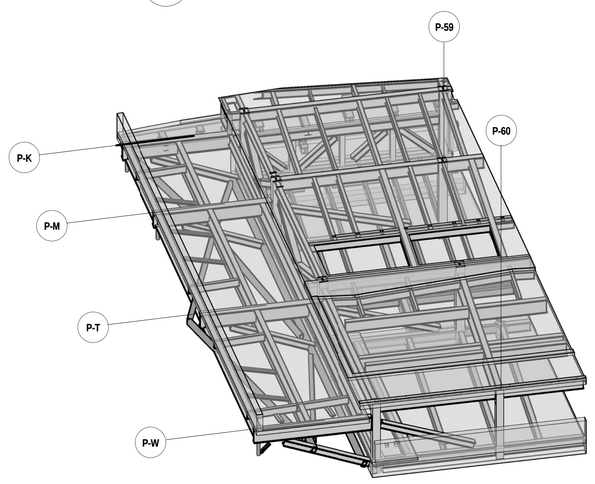

5 S-931 3D VIEW
SCALE:

FILE NAME:
PLOT DATE:

KEY PLAN:
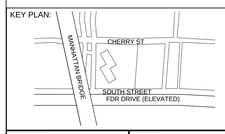

PROJECT NORTH
TRUE NORTH

DEVELOPER:
EXTELL DEVELOPMENT COMPANY
805 Third Ave, 7th Floor
New York, NY 10022
TEL: 212-712-6000 FAX: 212-712-6100

ARCHITECT OF RECORD:
AAI ARCHITECTS, P.C.
14 Wall Street, 2nd Floor
New York, NY 10005
TEL: 212-964-4040 FAX: 212-964-4090

INTERIOR DESIGNER:
MEYER DAVIS
180 Varick St, suite 404
New York, NY 10014
TEL: 212-627-5574

LANDSCAPE DESIGNER:
WEST 8 URBAN DESIGN & LANDSCAPE ARCHITECTURE P.C.
333 Hudson Street, Suite 905
New York, NY 10013
TEL: 212-285-0088 FAX: 212-285-0228

STRUCTURAL ENGINEERS:
WSP
228 East 45th Street
New York, NY 10017
TEL: 212-687-9888 FAX: 646-487-5501

MEP ENGINEERS:
ICOR ASSOCIATES, LLC
485 C Route 1 South, Suite 200
Iseline, NJ 08830
TEL: 908-272-3300 FAX: 908-272-4440

GEOTECHNICAL ENGINEERS:
LANGAN ENGINEERING & ENVIRONMENTAL SERVICES
21 Penn Plaza - 360 West 31st Street, 8th Floor
New York, NY 10001
TEL: 212.479.5400 FAX: 212.479.5444

No.	DESCRIPTION:	DATE:
	STEEL BID PACKAGE	02-24-15
	ISSUED FOR FILING	07-28-15
	ASI #56	02-19-16
	ASI #57	02-26-16
1	ASI #64	05-13-16
2	ASI #67	06-17-16
3	ASI #68	07-01-16
	ISSUED FOR FILING	05-22-17

Discrepancies must be reported immediately to the Architect before proceeding. Only figured dimensions are to be used. Contractors must check all dimensions on site. This drawing is protected by copyright.

ALL DIMENSIONS ARE SHOWN IN IMPERIAL.

CONSULTANT:
WSP

PROJECT:
252 SOUTH STREET
NEW YORK, NY

DRAWING TITLE:
TRUSS ELEVATIONS 2

SEAL & SIGNATURE:
STATE OF NEW YORK · AHMAD RAHIMIAN · No. 085057 · LICENSED PROFESSIONAL ENGINEER

DATE:	02/19/15
PROJECT No:	1302510
DRAWN: CAD	REV:
CHK: CL	
SCALE: As indicated	
DWG No:	**S-931.02**
DOB PAGE No:	of

DOB EMPLOYEE STAMP:
Tina Mathew, RA
APPROVED
Under Directive 2 of 1975
AMENDED APPLICATION
Date: 10/23/2017
NYC Development Hub

DOB B-SCAN:

DEPT OF BLDGS121805639 Job Number
ES#752 7505959 Scan Code
30" x 42" Anti El. SHEET SIZE

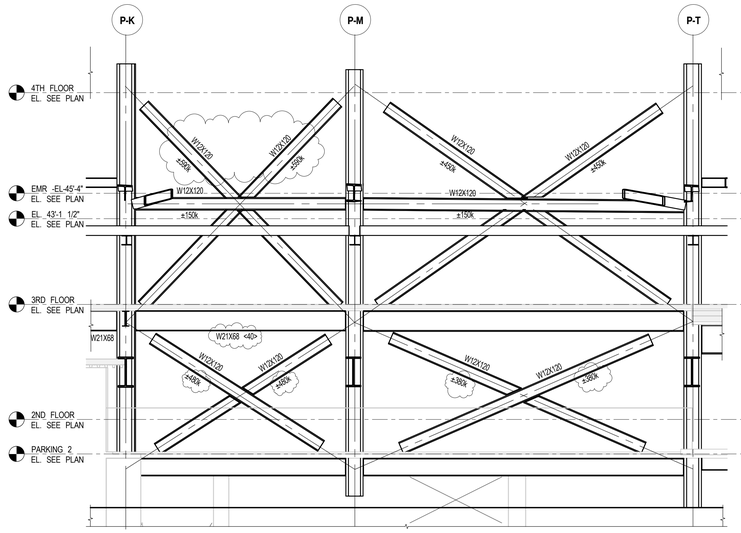

1 S-932 BRACE BR-1 ELEVATION
SCALE: 3/16" = 1'-0"

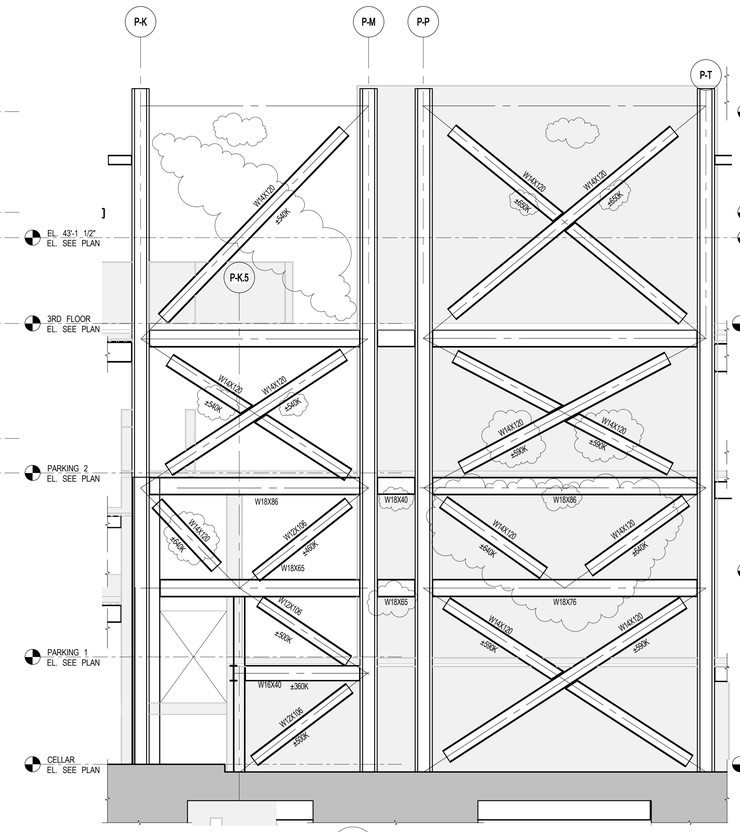

2 S-932 BRACE BR-2 ELEVATION
SCALE: 3/16" = 1'-0"

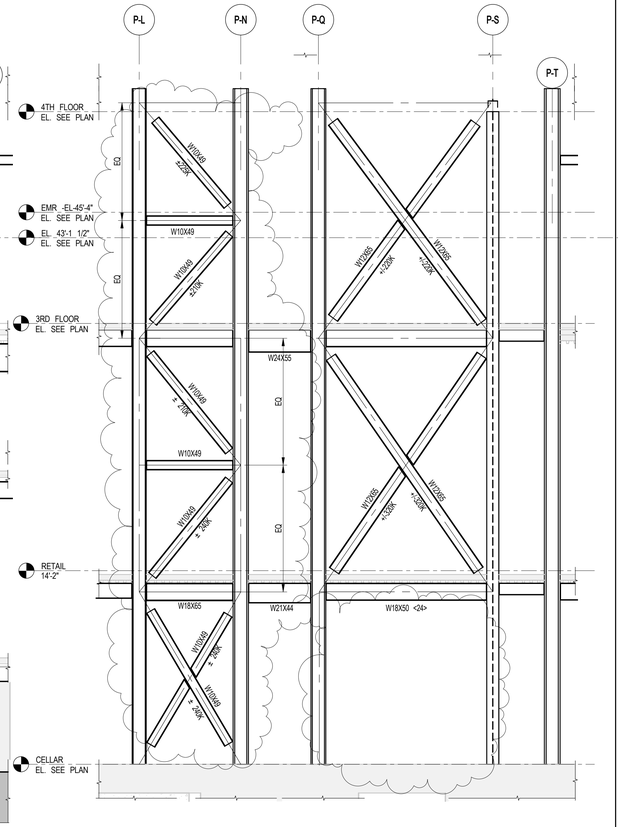

3 S-932 BRACE BR-3 ELEVATION
SCALE: 3/16" = 1'-0"

NOTES:

1. FOR GENERAL NOTES SEE DWG. FO-001 AND FO-002
2. INSTALL 3/4"ØX5" LONG SHEAR STUDS @1'-0" O.C. ON ALL BEAMS UNLESS GREATER NUMBER IS SHOWN ON PLAN OR ELEVATION.
3. FOR BRACING DETAILS SEE DWG. S-938.
4. FOR COLUMN SCHEDULE SEE S-953 & S-954
5. FOR TYPICAL DETAILS SEE S-960 SERIES DWGS.
6. THE FORCES SHOWN ON ELEVATION INDICATES ULTIMATE (LRFD: $P_{DEAD+LIVE}$) TENSION AND COMPRESSION LOADS FOR BRACE AND BEAM TO COLUMN CONNECTION DESIGN. SEE NOTES ON DWG S-938 FOR ADDITIONAL INFORMATION.

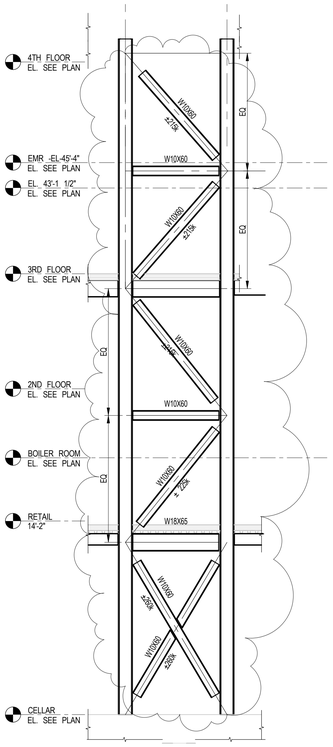

4 S-932 BRACE BR-4 ELEVATION
SCALE: 3/16" = 1'-0"

5 S-932 BRACE BR-5 ELEVATION
SCALE: 3/16" = 1'-0"

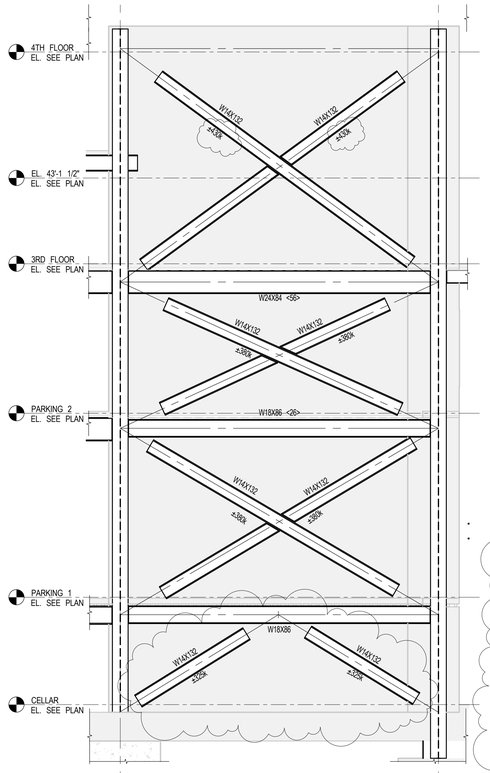

6 S-932 BRACE BR-6 ELEVATION
SCALE: 3/16" = 1'-0"

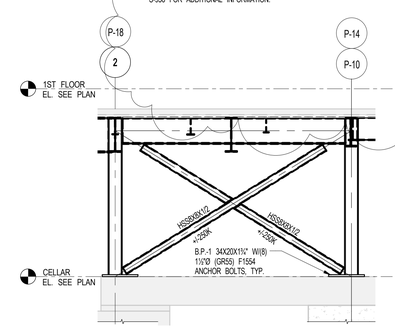

7 S-932 (2) TEMP. BRACE ELEVATION ALONG GRID P-H & GRID K
SCALE: 3/16" = 1'-0"

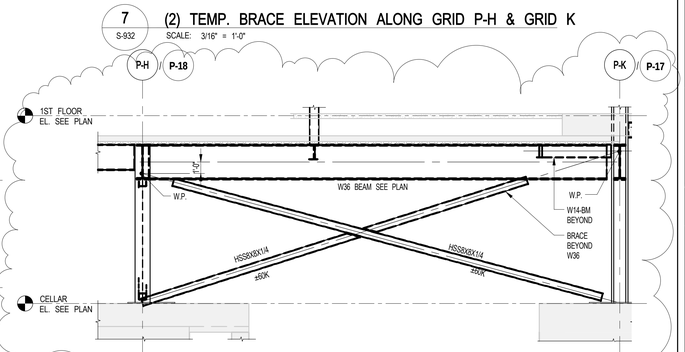

8 S-932 TEMP. BRACE ELEVATION BETWEEN COL'S AT GRID P-H/P-18 AND P-K/P-17
SCALE: 3/16" = 1'-0"

KEY PLAN:

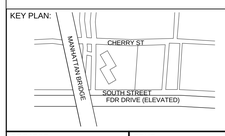

PROJECT NORTH | TRUE NORTH

DEVELOPER:
EXTELL DEVELOPMENT COMPANY
805 Third Ave, 7th Floor
New York, NY 10022
TEL: 212-712-6000 FAX: 212-712-6100

ARCHITECT OF RECORD:
AAI ARCHITECTS, P.C.
14 Wall Street, 2nd Floor
New York, NY 10005
TEL: 212-964-4040 FAX: 212-964-4090

INTERIOR DESIGNER:
MEYER DAVIS
180 Varick St, suite 404
New York, NY 10014
TEL: 212-627-5574

LANDSCAPE DESIGNER:
WEST 8 URBAN DESIGN & LANDSCAPE ARCHITECTURE P.C.
333 Hudson Street, Suite 905
New York, NY 10013
TEL: 212-285-0088 FAX: 212-285-0228

STRUCTURAL ENGINEERS:
WSP
228 East 45th Street
New York, NY 10017
TEL: 212-687-9888 FAX: 646-487-5501

MEP ENGINEERS:
ICOR ASSOCIATES, LLC
485 C Route 1 South, Suite 200
Iselin, NJ 08830
TEL: 908-272-3300 FAX: 908-272-4440

GEOTECHNICAL ENGINEERS:
LANGAN ENGINEERING & ENVIRONMENTAL SERVICES
21 Penn Plaza - 360 West 31st Street, 8th Floor
New York, NY 10001
TEL: 212.479.5400 FAX: 212.479.5444

No.	DESCRIPTION:	DATE:
	STEEL BID PACKAGE	02-24-15
	50% CONSTRUCTION DOCUMENTS	04-08-15
	ISSUED FOR FILING	07-28-15
	90% CONSTRUCTION DOCUMENTS	01-15-16
	ADDENDUM #16	02-04-16
	ASI #55	02-12-16
	ISSUED FOR FILING	05-22-17
1	XXX	XXX

Discrepancies must be reported immediately to the Architect before proceeding. Only figured dimensions are to be used. Contractors must check all dimensions on site. This drawing is protected by copyright.

ALL DIMENSIONS ARE SHOWN IN IMPERIAL.

CONSULTANT: WSP

PROJECT:
252 SOUTH STREET
NEW YORK, NY

DRAWING TITLE:
BRACING ELEVATIONS 1

SEAL & SIGNATURE:

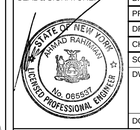

DATE:	02/24/15
PROJECT No:	1302510
DRAWN: CAD	REV:
CHK: CL	
SCALE: As indicated	
DWG No:	S-932.02
DOB PAGE No:	of

DOB EMPLOYEE STAMP:

Tina Mathew, RA
APPROVED
Under Directive 2 of 1975
AMENDED APPLICATION
Date: 10/23/2017
NYC Development Hub

DOB B-SCAN:

FILE NAME:
PLOT DATE:

DEPT OF BLDGS121105539 Job Number
ES1099891110 Scan Code
30" x 42" Arch E1 SHEET SIZE

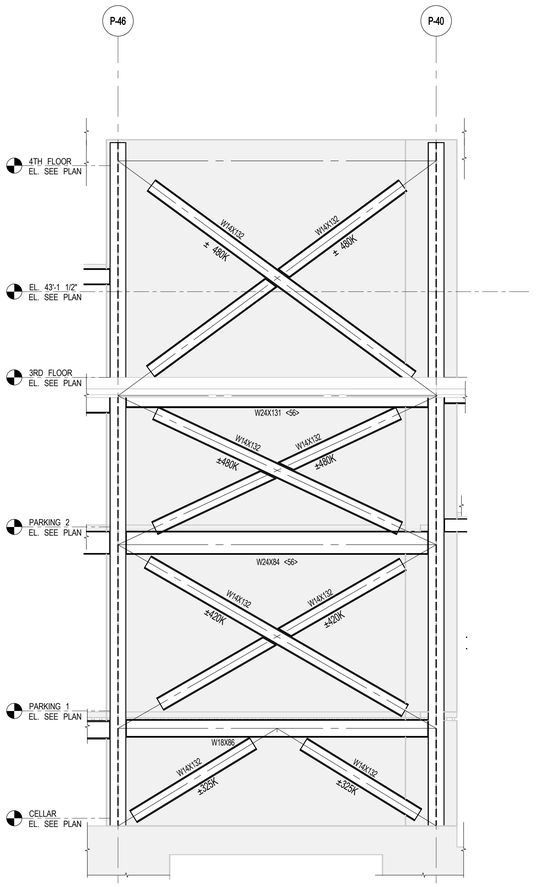

1 S-933 **BRACE BR-7 ELEVATION**
SCALE: 3/16" = 1'-0"

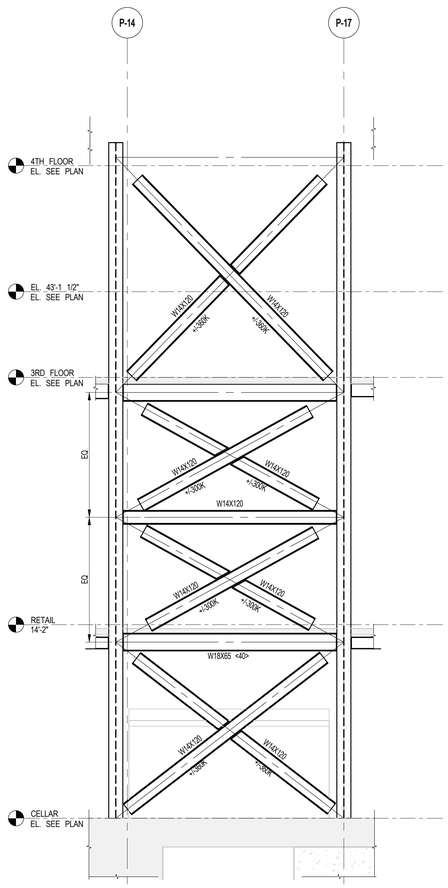

2 S-933 **BRACE BR-8 ELEVATION**
SCALE: 3/16" = 1'-0"

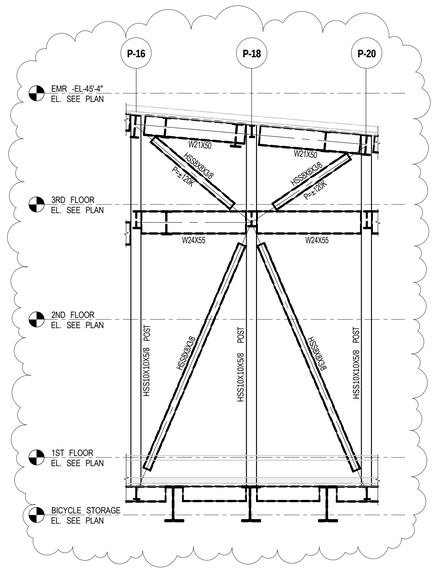

3 S-933 **RAMP VERTICAL BRACE ELEVATION**
SCALE: 3/16" = 1'-0"

NOTES:

1. FOR GENERAL NOTES SEE DWG. FO-001 AND FO-002
2. INSTALL 3/4"ØX5" LONG SHEAR STUDS @1'-0" O.C. ON ALL BEAMS UNLESS GREATER NUMBER IS SHOWN ON PLAN OR ELEVATION.
3. FOR BRACING DETAILS SEE DWG. S-938.
4. FOR COLUMN SCHEDULE SEE S-953 & S-954
5. FOR TYPICAL DETAILS SEE S-960 SERIES DWGS.
6. THE FORCES SHOWN ON ELEVATION INDICATES ULTIMATE (LRFD- $P_{DIAGONAL}$) TENSION AND COMPRESSION LOADS FOR BRACE AND BEAM TO COLUMN CONNECTION DESIGN. SEE NOTES ON DWG S-938 FOR ADDITIONAL INFORMATION.

KEY PLAN:

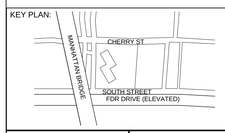

PROJECT NORTH

TRUE NORTH

DEVELOPER:
EXTELL DEVELOPMENT COMPANY
805 Third Ave, 7th Floor
New York, NY 10022
TEL: 212-712-6000 FAX: 212-712-6100

ARCHITECT OF RECORD:
AAI ARCHITECTS, P.C.
14 Wall Street, 2nd Floor
New York, NY 10005
TEL: 212-964-4040 FAX: 212-964-4090

INTERIOR DESIGNER:
MEYER DAVIS
180 Varick St, suite 404
New York, NY 10014
TEL: 212-627-5574

LANDSCAPE DESIGNER:
WEST 8 URBAN DESIGN & LANDSCAPE ARCHITECTURE P.C.
333 Hudson Street, Suite 905
New York, NY 10013
TEL: 212-285-0088 FAX: 212-285-0228

STRUCTURAL ENGINEERS:
WSP
228 East 45th Street
New York, NY 10017
TEL: 212-687-9888 FAX: 646-487-5501

MEP ENGINEERS:
ICOR ASSOCIATES, LLC
485 C Route 1 South, Suite 200
Iseline, NJ 08830
TEL: 908-272-3300 FAX: 908-272-4440

GEOTECHNICAL ENGINEERS:
LANGAN ENGINEERING & ENVIRONMENTAL SERVICES
21 Penn Plaza - 360 West 31st Street, 8th Floor
New York, NY 10001
TEL: 212.479.5400 FAX: 212.479.5444

No.	DESCRIPTION:	DATE:
	STEEL BID PACKAGE	02-24-15
	90% CONSTRUCTION DOCUMENTS	01-15-16
	ADDENDUM #16	02-04-16
	ISSUE FOR CONSTRUCTION	03-18-16
	ISSUED FOR FILING	05-22-17

Discrepancies must be reported immediately to the Architect before proceeding. Only figured dimensions are to be used. Contractors must check all dimensions on site. This drawing is protected by copyright.

ALL DIMENSIONS ARE SHOWN IN IMPERIAL.

CONSULTANT:
WSP

PROJECT:
252 SOUTH STREET
NEW YORK, NY

DRAWING TITLE:
BRACING ELEVATIONS 2

SEAL & SIGNATURE:
STATE OF NEW YORK · ANIRAD RAMKISSOON · No. 085657 · LICENSED PROFESSIONAL ENGINEER

DATE:	02/24/15
PROJECT No:	1302510
DRAWN: CAD	REV:
CHK: CL	
SCALE: As indicated	
DWG No:	**S-933.01**
DOB PAGE No:	of

DOB EMPLOYEE STAMP:
Tina Mathew, RA
APPROVED
Under Directive 2 of 1975
AMENDED APPLICATION
Date: 10/23/2017
NYC Development Hub

DOB B-SCAN:

FILE NAME:
PLOT DATE:

DEPT OF BLDGS121105028 Job Number
ES1005250172 Scan Code
30" x 42" Arch E1 - SHEET SIZE

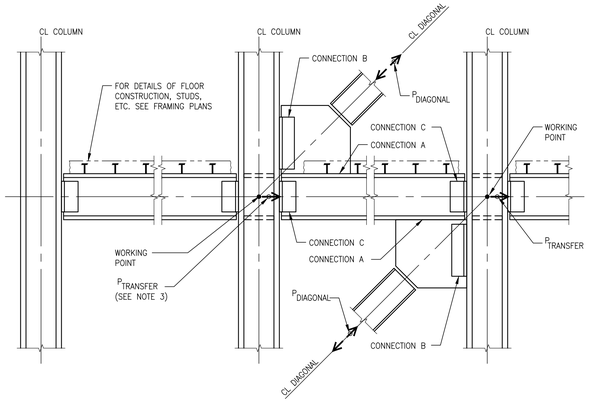

BRACING ELEVATION ILLUSTRATING

WORKING POINTS AND ADDITIONAL FORCES: $P_{TRANSFER}$ & $P_{DIAGONAL}$

NOTE:
SIMPLIFIED ELEVATION, SEE REMAINING DETAILS ON THIS DRAWING FOR ADDITIONAL INFORMATION.

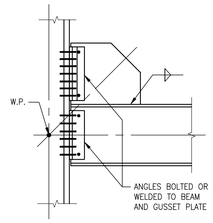

DOUBLE ANGLE CONNECTION TO COLUMN FLANGE

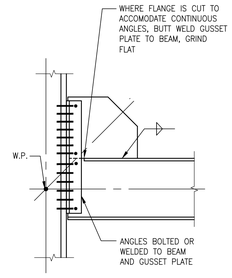

SINGLE LENGTH DOUBLE ANGLE CONNECTION TO COLUMN FLANGE

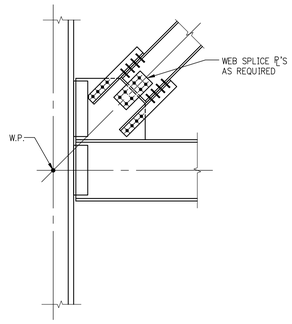

DIAGONAL CONNECTION TO GUSSET PLATE

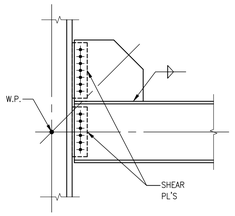

SHEAR PLATE CONNECTION TO COLUMN FLANGE

BEAM/GUSSET PLATE DETAILS AT COLUMN

NOTE:
BRACES NOT SHOWN FOR CLARITY

NOTES:
1. THE UNIFORM FORCE METHOD, AS OUTLINED IN THE MANUAL OF STEEL CONSTRUCTION (LRFD) OF THE AISC, SHALL BE USED IN THE DESIGN OF WIND TRUSS CONNECTIONS:
   A. CONNECTION OF GUSSET PLATE TO BEAM
   B. CONNECTION OF GUSSET PLATE TO COLUMN
   C. CONNECTION OF BEAM TO COLUMN.
2. SEE BRACED FRAME ELEVATIONS IN THE CONTRACT DRAWINGS FOR MEMBER SIZES.
   SEE COLUMN SCHEDULES AND FRAMING PLANS FOR MEMBER SIZES AND/OR ORIENTATIONS NOT SHOWN IN ELEVATIONS.
3. REQUIRED STRENGTH OF BRACING CONNECTIONS (INCLUDING BEAM TO COLUMN CONNECTIONS IF PART OF BRACING SYSTEM) SHALL BE BASED ON: FORCES SHOWN ON PLANS, ELEVATION AND COLUMN SCHEDULES
4. IN ADDITION TO VERTICAL AND HORIZONTAL COMPONENTS DERIVED FROM AXIAL FORCES IN DIAGONALS ($P_{DIAGONAL}$), THE ADDITIONAL FORCE (P_T) IS TO BE INCLUDED IN DESIGN OF CONNECTION, WHERE:
   $P_T = P_{TRANSFER}$, THE HORIZONTAL FORCE TRANSFERRING THROUGH A COLUMN FROM ONE SIDE TO THE OTHER AS INDICATED ON FRAMING PLANS. (LRFD LOAD) (TENSION OR COMPRESSION)
5. CONNECT BEAM FLANGES TO COLUMN AS REQUIRED TO TRANSFER FORCES DESCRIBED ABOVE.
6. IN DESIGN OF ALL CONNECTIONS FOR AXIAL FORCES, WHEN THE CONTROLLING DESIGN AXIAL FORCE IS COMPRESSION, THE CONNECTION SHALL BE DESIGNED TO ALSO PROVIDE A TENSILE CAPACITY OF AT LEAST 50 PER CENT OF THE COMPRESSIVE LOADS AS A MINIMUM UNLESS GREATER SHOWN ON ELEVATION.
7. IN ADDITION TO FORCES INDICATED IN NOTES 3,4,& 6, BEAM CONNECTION SHALL BE DESIGN FOR VERTICAL SHEAR IN ACCORDANCE TO SIMPLE SHEAR CONNECTIONS IN DWG. S-960.
8. COLUMNS SHALL BE INVESTIGATED FOR TRANSFER FORCES TO DETERMINE WHETHER STIFFENER PLATES ARE REQUIRED.
9. SLIP-CRITICAL BOLTS USED IN ALL BRACED FRAME CONNECTIONS SHALL BE BASED UPON BOLT VALUES GIVEN IN TABLE 7-4 "SLIP-CRITICAL CONNECTIONS" WHERE "SLIP IS A STRENGTH LIMIT-STATE," CLASS A FAYING SURFACE (13TH EDITION OF AISC MANUAL) (MINIMUM BOLT DIAMETER = 7/8")
10. IF THE FABRICATOR PROPOSES TO USE CLASS B FAYING SURFACE AND A GREATER BOLT CAPACITY THAN TABLE 7-4 VALUES, HE MUST SUBMIT HIS PROPOSED DESIGN AND FABRICATION PROCEDURES TO THE ENGINEER FOR PRIOR APPROVAL.
11. GUSSET PLATE DESIGN SHALL INCLUDE CONSIDERATION OF BUCKLING.
12. THE DETAILS SHOWN ON THIS DWG. ARE TYPICAL DETAILS FOR VARIOUS BRACING CONNECTION CONDITIONS. THE SIZE AND NUMBER OF BOLTS, WELDS, GUSSETS AND PLATES TO BE ENGINEERED AND DETAILED ON SHOP DWG., BASED ON FORCES AND DESIGN CRITERIA PROVIDED IN S-300 SERIES.

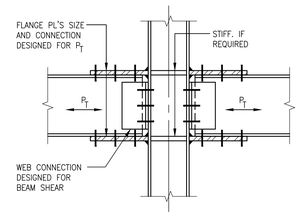

$P_{TRANSFER}$ CONNECTION

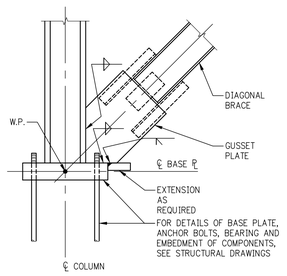

BASE CONNECTION TO COLUMN FLANGE

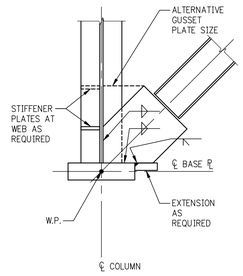

BASE CONNECTION TO COLUMN WEB

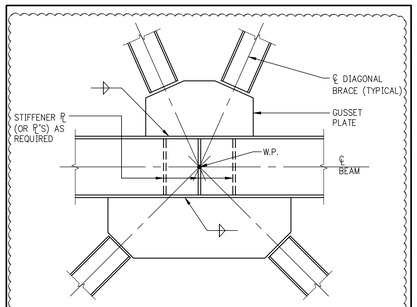

CONNECTION AT 'K' OR 'X' BRACING

NOTE:
GUSSET PLATE CAN OCCUR AT TOP, BOTTOM, OR BOTH FLANGES OF BEAM, DEPENDING UPON BRACING LAYOUT. SEE BRACING ELEVATIONS

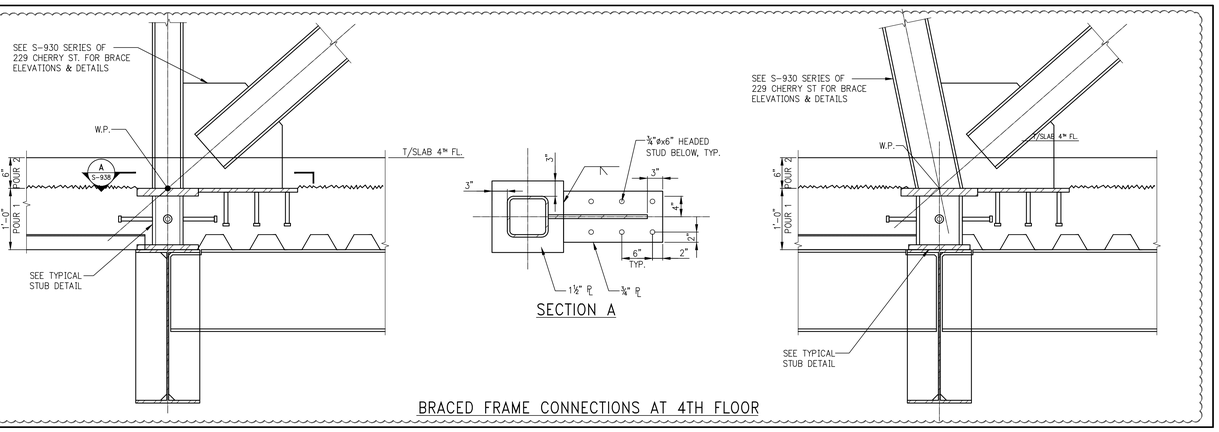

BRACED FRAME CONNECTIONS AT 4TH FLOOR

KEY PLAN:

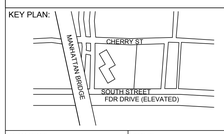

PROJECT NORTH | TRUE NORTH

DEVELOPER:
EXTELL DEVELOPMENT COMPANY
805 Third Ave, 7th Floor
New York, NY 10022
TEL: 212-712-6000 FAX: 212-712-6100

ARCHITECT OF RECORD:
AAI ARCHITECTS, P.C.
14 Wall Street, 2nd Floor
New York, NY 10005
TEL: 212-964-4040 FAX: 212-964-4090

INTERIOR DESIGNER:
MEYER DAVIS
180 Varick St, suite 404
New York, NY 10014
TEL: 212-627-5574

LANDSCAPE DESIGNER:
WEST 8 URBAN DESIGN & LANDSCAPE ARCHITECTURE P.C.
333 Hudson Street, Suite 905
New York, NY 10013
TEL: 212-285-0088 FAX: 212-285-0228

STRUCTURAL ENGINEERS:
WSP
228 East 45th Street
New York, NY 10017
TEL: 212-687-9888 FAX: 646-487-5501

MEP ENGINEERS:
ICOR ASSOCIATES, LLC
485 C Route 1 South, Suite 200
Iseline, NJ 08830
TEL: 908-272-3300 FAX: 908-272-4440

GEOTECHNICAL ENGINEERS:
LANGAN ENGINEERING & ENVIRONMENTAL SERVICES
21 Penn Plaza - 360 West 31st Street, 8th Floor
New York, NY 10001
TEL: 212.479.5400 FAX: 212.479.5444

No.	DESCRIPTION:	DATE:
	STEEL BID PACKAGE	02-24-15
	ADDENDUM #3	03-27-15
	ISSUED FOR FILING	07-28-15
	ADDENDUM #14	10-22-15
	90% CONSTRUCTION DOCUMENTS	01-15-16
	ADDENDUM #16	02-04-16
	ISSUE FOR CONSTRUCTION	03-18-16
	ISSUED FOR FILING	05-22-17

Discrepancies must be reported immediately to the Architect before proceeding. Only figured dimensions are to be used. Contractors must check all dimensions on site. This drawing is protected by copyright.

ALL DIMENSIONS ARE SHOWN IN IMPERIAL.

CONSULTANT:
WSP

PROJECT:
252 SOUTH STREET
NEW YORK, NY

DRAWING TITLE:
BRACING DETAILS

SEAL & SIGNATURE:
STATE OF NEW YORK · ANMAD RASHDAN · No. 085857 · LICENSED PROFESSIONAL ENGINEER

DATE: 07/25/14
PROJECT No: 1302510
DRAWN: CADD | REV:
CHK: CL
SCALE: N.T.S.
DWG No: **S-938.02**
DOB PAGE No: of

DOB EMPLOYEE STAMP:
Tina Mathew, RA
APPROVED
Under Directive 2 of 1975
AMENDED APPLICATION
Date: 10/23/2017
NYC Development Hub

DOB B-SCAN:

FILE NAME:
PLOT DATE:

DEPT OF BLDGS121105539 Job Number
E1509333930 Scan Code
30" x 42" Arch E1 SHEET SIZE

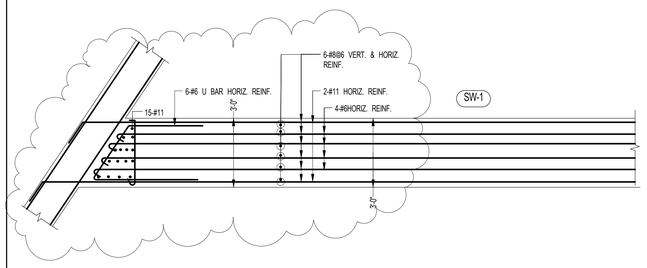

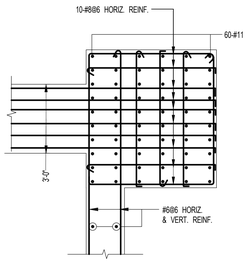

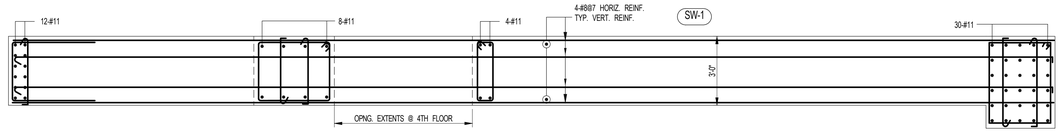

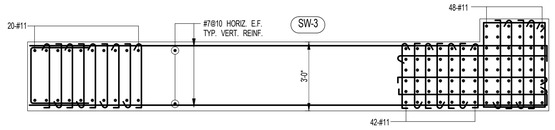

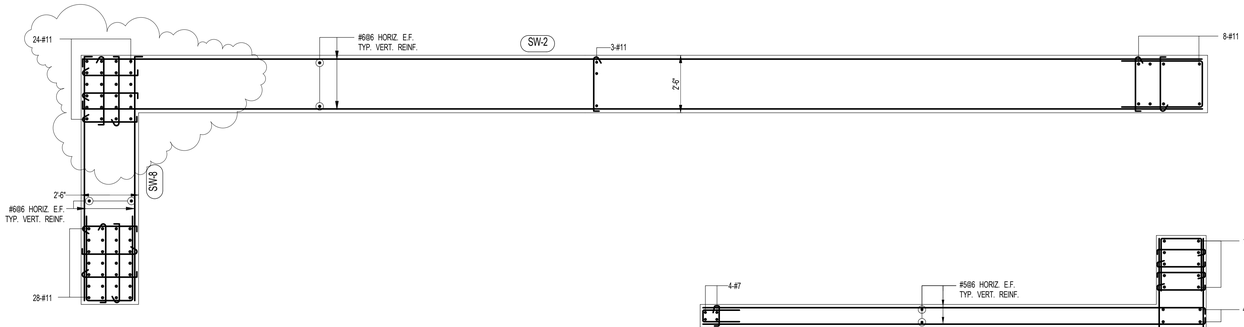

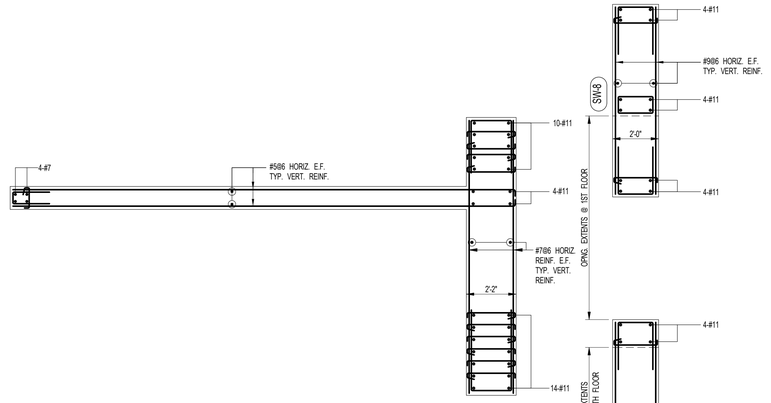

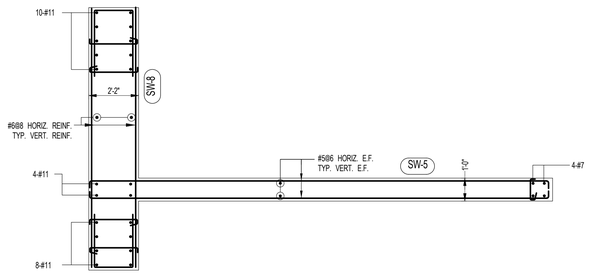

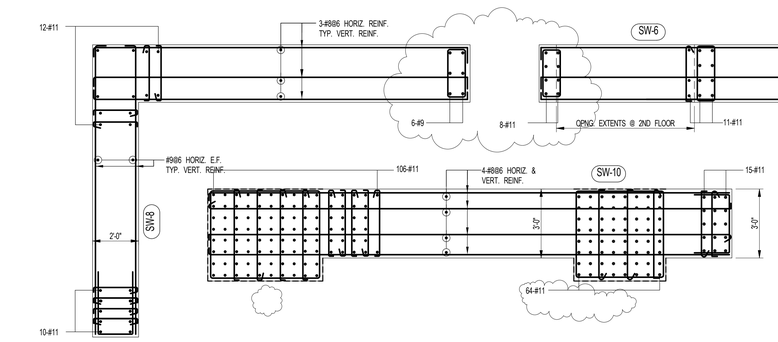

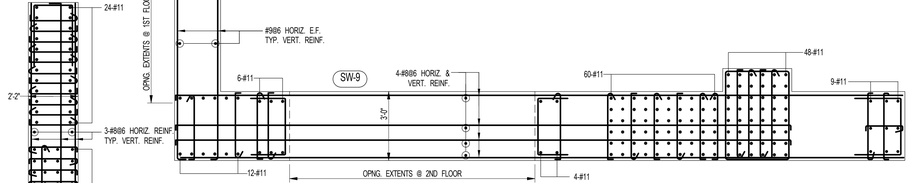

1 S-940 PART PLAN FOUNDATION TO U/S 1ST FLOOR SHEARWALL DETAILS

SCALE: 3/8" = 1'-0"

NOTES:

1. SEE SHEARWALL ELEVATION FOR ADDITIONAL REINFORCEMENT NOT SHOWN ON PLAN
2. ALL REINFORCEMENT SHOWN ON PLAN SHALL BE GARDE 60 U.O.N
3. ALL #11 VERTICAL REINFORCEMENT SHALL BE GRADE 75
4. SEE DRAWING S-849 FOR TYPICAL SHEARWALL DETAILS AND TYPICAL WALL REINFORCEMENT SCHEDULE

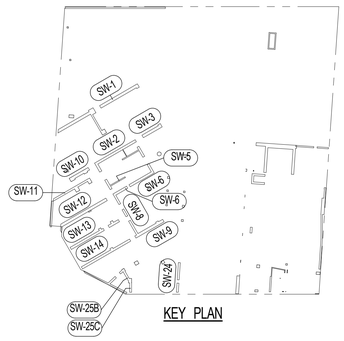

KEY PLAN

KEY PLAN:

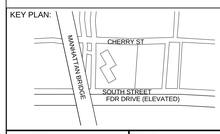

PROJECT NORTH

TRUE NORTH

DEVELOPER:
EXTELL DEVELOPMENT COMPANY
805 Third Ave, 7th Floor
New York, NY 10022
TEL: 212-712-6000 FAX: 212-712-6100

ARCHITECT OF RECORD:
AAI ARCHITECTS, P.C.
14 Wall Street, 2nd Floor
New York, NY 10005
TEL: 212-964-4040 FAX: 212-964-4090

INTERIOR DESIGNER:
MEYER DAVIS
180 Varick St, suite 404
New York, NY 10014
TEL: 212-627-5574

LANDSCAPE DESIGNER:
WEST 8 URBAN DESIGN & LANDSCAPE ARCHITECTURE P.C.
333 Hudson Street, Suite 905
New York, NY 10013
TEL: 212-285-0088 FAX: 212-285-0228

STRUCTURAL ENGINEERS:
WSP
228 East 45th Street
New York, NY 10017
TEL: 212-687-9888 FAX: 646-487-5501

MEP ENGINEERS:
ICOR ASSOCIATES, LLC
485 C Route 1 South, Suite 200
Iselin, NJ 08830
TEL: 908-272-3300 FAX: 908-272-4440

GEOTECHNICAL ENGINEERS:
LANGAN ENGINEERING & ENVIRONMENTAL SERVICES
21 Penn Plaza - 360 West 31st Street, 8th Floor
New York, NY 10001
TEL: 212.479.5400 FAX: 212.479.5444

No.	DESCRIPTION:	DATE:
	ISSUED FOR FOUNDATION BID	07-25-14
	50% DD	08-01-14
	DESIGN DEVELOPMENT	10-07-14
	ISSUED FOR FOUNDATION BID	01-09-15
	ISSUED FOR FILING	02-13-15
	CONCRETE BID PACKAGE	03-06-15
	ISSUED FOR FILING	07-28-15
	80% CONSTRUCTION DOCUMENTS	08-14-15
	ADDENDUM #14	10-22-15
	ADDENDUM #15	11-18-15
	ISSUE FOR CONSTRUCTION	03-18-16
	ISSUED FOR FILING	05-22-17

Discrepancies must be reported immediately to the Architect before proceeding. Only figured dimensions are to be used. Contractors must check all dimensions on site. This drawing is protected by copyright.

ALL DIMENSIONS ARE SHOWN IN IMPERIAL.

CONSULTANT:
WSP

PROJECT:
252 SOUTH STREET
NEW YORK, NY

DRAWING TITLE:
FOUNDATION TO U/S 1ST FLOOR SHEARWALL DETAILS

SEAL & SIGNATURE:
STATE OF NEW YORK · AHMAD RASHIDIAN · No. 085857 · LICENSED PROFESSIONAL ENGINEER

DATE: 07/25/14
PROJECT No: 1302510
DRAWN: CAD REV:
CHK: CL
SCALE: As indicated
DWG No: **S-940.02**
DOB PAGE No: of

DOB EMPLOYEE STAMP:
Tina Mathew, RA
APPROVED
Under Directive 2 of 1975
AMENDED APPLICATION
Date: 10/23/2017
NYC Development Hub

DOB B-SCAN:

FILE NAME:
PLOT DATE:

DEPT OF BLDGS121185539 Job Number
E1332230419 Scan Code
30" x 42" Arch E1 SHEET SIZE

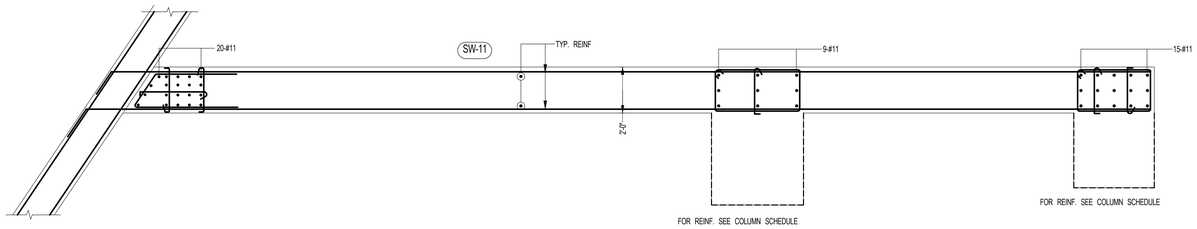

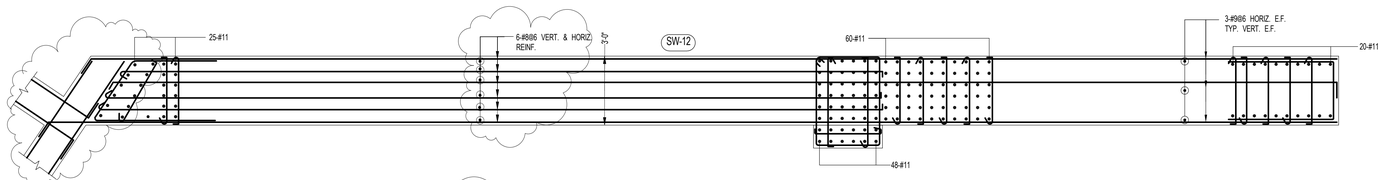

2 S-941 **PART PLAN SW12**
SCALE: 3/8" = 1'-0"

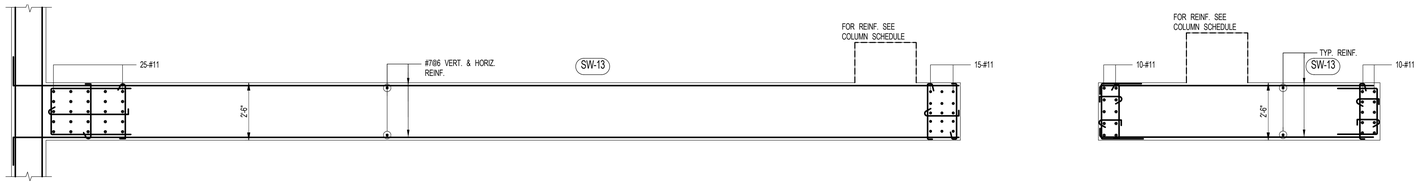

3 S-941 **PART PLAN SW13**
SCALE: 3/8" = 1'-0"

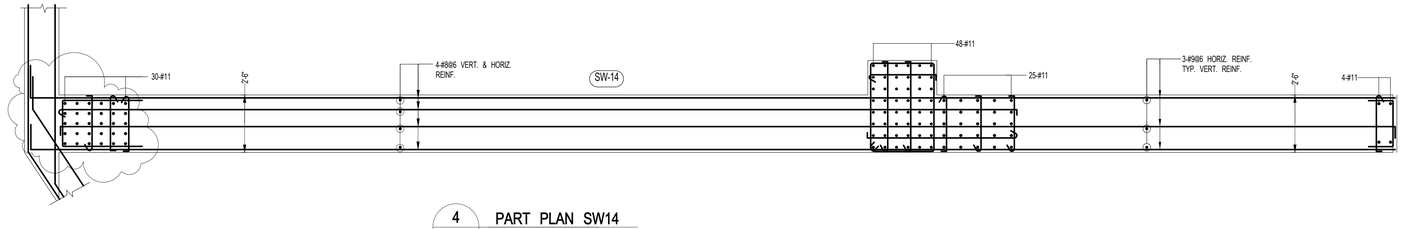

4 S-941 **PART PLAN SW14**
SCALE: 3/8" = 1'-0"

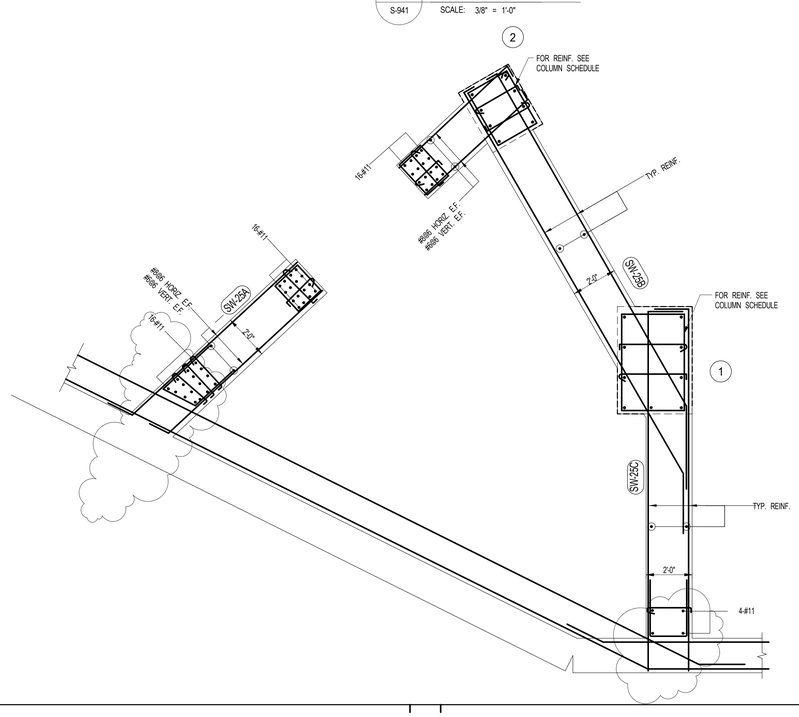

1 S-941 **PART PLAN FOUNDATION TO U/S 1ST FLOOR SHEARWALL DETAILS**
SCALE: 3/8" = 1'-0"

NOTES :

1. FOR NOTES SEE DRAWING S-940

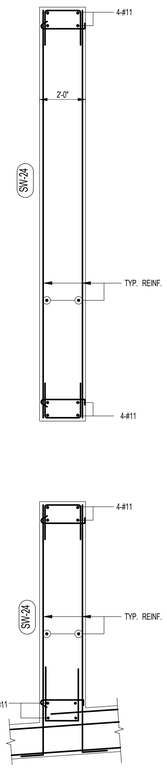

5 S-941 **PART PLAN SW24**
SCALE: 3/8" = 1'-0"

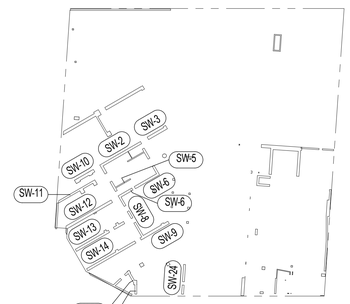

KEY PLAN

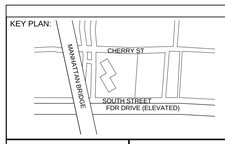

PROJECT NORTH

TRUE NORTH

DEVELOPER:
EXTELL DEVELOPMENT COMPANY
805 Third Ave, 7th Floor
New York, NY 10022
TEL: 212-712-6000 FAX: 212-712-6100

ARCHITECT OF RECORD:
AAI ARCHITECTS, P.C.
14 Wall Street, 2nd Floor
New York, NY 10005
TEL: 212-964-4040 FAX: 212-964-4090

INTERIOR DESIGNER:
MEYER DAVIS
180 Varick St, suite 404
New York, NY 10014
TEL: 212-627-5574

LANDSCAPE DESIGNER:
WEST 8 URBAN DESIGN & LANDSCAPE ARCHITECTURE P.C.
333 Hudson Street, Suite 905
New York, NY 10013
TEL: 212-285-0088 FAX: 212-285-0228

STRUCTURAL ENGINEERS:
WSP
228 East 45th Street
New York, NY 10017
TEL: 212-687-9888 FAX: 646-487-5501

MEP ENGINEERS:
ICOR ASSOCIATES, LLC
485 C Route 1 South, Suite 200
Iseline, NJ 08830
TEL: 908-272-3300 FAX: 908-272-4440

GEOTECHNICAL ENGINEERS:
LANGAN ENGINEERING & ENVIRONMENTAL SERVICES
21 Penn Plaza - 360 West 31st Street, 8th Floor
New York, NY 10001
TEL: 212.479.5400 FAX: 212.479.5444

No.	DESCRIPTION:	DATE:
	50% DD	08-01-14
	DESIGN DEVELOPMENT	10-07-14
	ISSUED FOR FOUNDATION BID	01-09-15
	ISSUED FOR FILING	02-13-15
	CONCRETE BID PACKAGE	03-06-15
	50% CONSTRUCTION DOCUMENTS	04-08-15
	ISSUED FOR FILING	07-28-15
	80% CONSTRUCTION DOCUMENTS	08-14-15
	ADDENDUM #11	09-25-15
	ISSUED FOR FILING	05-22-17

Discrepancies must be reported immediately to the Architect before proceeding. Only figured dimensions are to be used. Contractors must check all dimensions on site. This drawing is protected by copyright.

ALL DIMENSIONS ARE SHOWN IN IMPERIAL.

CONSULTANT:
WSP

PROJECT:
252 SOUTH STREET
NEW YORK, NY

DRAWING TITLE:
FOUNDATION TO U/S 1ST FLOOR SHEARWALL DETAILS

SEAL & SIGNATURE:
STATE OF NEW YORK · AHMAD RAMADAN · LICENSED PROFESSIONAL ENGINEER · No. 085827

DATE:	07/25/14
PROJECT No:	1302510
DRAWN: CAD	REV:
CHK: CL	
SCALE: As indicated	
DWG No:	**S-941.02**
DOB PAGE No:	of

DOB EMPLOYEE STAMP:
Tina Mathew, RA
Buildings
APPROVED
Under Directive 2 of 1975
AMENDED APPLICATION
Date: 10/23/2017
NYC Development Hub

DOB B-SCAN:

FILE NAME:
PLOT DATE:

COLUMN SCHEDULE

CONTINUES

FLOOR \ COL. NO	1	2	3	4	5	6	7	8	9	10	11	12	13	14	15	16	17	18	19	20	21	22	23	24	25	26	27	28	29	30	31	32
30th FLOOR	1209	1999	2449	2439	1504	1895	2909	2422	1569	2246	2083	1239	2308	2839	2417	1502	2028	2924	2407	1494	2379	2323	4448	4811	3371	4201	4455	4446	4785	3443	4340	4541
29th FLOOR	1235	2042	2501	2482	1528	1928	2962	2464	1593	2286	2124	1265	2350	2889	2459	1525	2062	2973	2449	1517	2420	2363	4532	4892	3434	4261	4538	4527	4866	3507	4403	4626
28th FLOOR	1261	2085	2552	2525	1552	1962	3015	2508	1617	2325	2165	1290	2392	2939	2500	1549	2096	3021	2491	1540	2461	2404	4616	4972	3496	4322	4622	4609	4948	3571	4466	4710
27th FLOOR	1299	2149	2637	2590	1593	2013	3091	2571	1659	2384	2228	1332	2451	3016	2564	1591	2146	3090	2553	1579	2523	2466	4730	5092	3581	4406	4733	4718	5058	3658	4550	4824
MECH. FLOOR / 26th FLOOR	1415	2311	2847	2792	1714	2153	3317	2740	1779	2555	2392	1453	2622	3233	2731	1697	2284	3308	2720	1696	2694	2637	4910	5254	3714	4534	4912	4892	5237	3793	4681	5004
25th FLOOR	1441	2355	2905	2838	1739	2189	3370	2785	1805	2596	2434	1478	2664	3287	2776	1736	2319	3358	2764	1720	2736	2679	4995	5336	3778	4596	4996	4974	5313	3859	4745	5089
24th FLOOR	1466	2400	2963	2885	1765	2224	3424	2830	1831	2636	2477	1504	2707	3342	2821	1762	2353	3407	2808	1744	2777	2720	5080	5418	3841	4658	5080	5057	5396	3924	4809	5174
23rd FLOOR	1492	2444	3021	2931	1791	2259	3478	2875	1857	2677	2519	1530	2749	3396	2867	1788	2388	3457	2852	1768	2818	2761	5166	5500	3905	4719	5164	5139	5478	3989	4872	5260
22nd FLOOR	1518	2489	3078	2977	1816	2295	3531	2920	1883	2718	2562	1555	2791	3450	2912	1813	2422	3506	2896	1792	2860	2803	5251	5582	3968	4781	5248	5221	5561	4054	4936	5345
21st FLOOR	1544	2533	3136	3023	1842	2330	3585	2964	1909	2759	2604	1581	2833	3504	2957	1839	2457	3556	2940	1816	2901	2844	5336	5663	4031	4843	5332	5303	5643	4120	5000	5430
20th FLOOR	1569	2578	3194	3069	1868	2366	3639	3009	1935	2800	2647	1607	2875	3559	3002	1865	2491	3605	2984	1840	2942	2885	5421	5745	4095	4905	5416	5385	5726	4185	5064	5515
19th FLOOR	1595	2622	3252	3115	1893	2401	3692	3054	1960	2841	2689	1633	2917	3613	3047	1891	2526	3654	3028	1864	2984	2927	5507	5827	4158	4967	5500	5467	5808	4250	5128	5601
18th FLOOR	1621	2667	3309	3161	1919	2436	3746	3099	1986	2881	2731	1658	2960	3667	3092	1916	2561	3704	3072	1888	3025	2968	5592	5909	4222	5029	5584	5550	5891	4315	5192	5686
17th FLOOR	1646	2711	3367	3207	1945	2472	3800	3144	2012	2922	2774	1684	3002	3722	3137	1942	2595	3753	3116	1912	3066	3010	5677	5991	4285	5091	5668	5632	5973	4381	5256	5771
16th FLOOR	1674	2759	3427	3255	1972	2509	3855	3190	2039	2966	2819	1711	3048	3778	3184	1969	2631	3807	3161	1937	3111	3054	5767	6076	4352	5156	5757	5718	6059	4449	5322	5861
15th FLOOR	1699	2805	3485	3301	1998	2544	3909	3235	2065	3008	2863	1737	3091	3832	3230	1995	2666	3858	3205	1961	3154	3097	5854	6159	4417	5219	5843	5802	6142	4515	5387	5948
14th FLOOR	1725	2851	3543	3347	2023	2580	3963	3280	2091	3050	2907	1763	3135	3887	3275	2021	2701	3909	3249	1985	3197	3140	5942	6242	4482	5282	5929	5887	6226	4582	5453	6036
13th FLOOR	1751	2897	3601	3393	2049	2615	4017	3325	2117	3092	2951	1788	3178	3941	3320	2046	2735	3960	3293	2009	3240	3183	6029	6325	4547	5345	6016	5971	6310	4649	5518	6123
12th FLOOR	1776	2943	3658	3439	2075	2650	4070	3370	2143	3134	2995	1814	3222	3995	3365	2072	2770	4011	3337	2033	3283	3226	6117	6409	4613	5408	6102	6056	6394	4715	5583	6211
11th FLOOR	1802	2989	3716	3485	2101	2686	4124	3415	2169	3176	3038	1840	3266	4050	3410	2098	2804	4062	3381	2057	3326	3269	6204	6492	4678	5471	6189	6140	6478	4782	5648	6298
10th FLOOR	1828	3035	3774	3531	2126	2721	4178	3459	2194	3218	3082	1865	3309	4104	3455	2123	2839	4113	3425	2081	3369	3312	6292	6575	4743	5534	6275	6225	6561	4849	5713	6386
9th FLOOR	1854	3081	3832	3577	2152	2756	4231	3504	2220	3260	3126	1891	3353	4158	3500	2149	2873	4165	3469	2105	3412	3355	6380	6658	4808	5597	6361	6309	6645	4915	5778	6474
8th FLOOR	1879	3127	3889	3623	2178	2792	4285	3549	2246	3302	3170	1919	3397	4212	3546	2175	2908	4216	3513	2129	3455	3399	6467	6741	4874	5660	6448	6393	6729	4982	5843	6561
7th FLOOR	1906	3173	3947	3669	2403	3027	4339	3594	2272	3344	3214	1947	3440	4267	3591	2201	2943	4267	3557	2153	3498	3442	6555	6824	4939	5724	6534	6478	6813	5049	5908	6649
6th FLOOR	1933	3219	4005	3715	2429	3063	4392	3639	2298	3386	3257	1975	3484	4321	3636	2226	2977	4318	3601	2177	3541	3485	6642	6907	5004	5787	6621	6562	6897	5115	5973	6736
5th FLOOR	1964	3267	4065	3763	2456	3101	4448	3685	2325	3429	3303	2005	3529	4379	3686	2253	3018	4371	3646	2202	3586	3529	6732	6992	5071	5851	6709	6649	6982	5184	6040	6826
4th FLOOR	2237	3581	4488	4082			4858	3799	2835	3767	3573	2160	3657	4528	4255	2237	3109	4487	3742	2259	3677	3625	6923	7184	5219	6006	6897	6830	7188	5323	6191	7017
3rd FLOOR	2295	3661	4589	4181			4995	3889	3012	3855	3764	2238	3784	4667	4363	2397	3199	4595	3834	2313	3767	3715	7107	7368	5361	6150	7080	7011	7384	5455	6335	7201
2ND FLOOR	2487	3845	4678	4270				3974	3287	3947	3994	2326	3907		4462	2577	3395	4865	4102	2430	3851	3880	7295	7552	5549		7268	7198		5595	6472	7432
1ST FLOOR	2578	3938	4762															5047		2548	4006	4029	7464	7720	5678						6599	7639
BASEMENT	2684	4052	4973	4543		5330		4148	3544	4066	4222	2452	4052	4883				5276		2657	4177	4186	7651	7898	5819	6450	7467	7394	7684		6734	10157
Fnd (service)	2264	3453	4150	3762	1958	2474	4393	3481	2902	3405	3532	2070	3324	4082	3840	2399	2991	4364		2262	3537	3499	6279	6436	4739	5380	6147	6077	6406	4672	5530	8389

COLUMN SCHEDULE

CONTINUES ON DWG. S-951

FLOOR \ COL. NO	1	2	3	4	5	6	7	8	9	10	11	12	13	14	15	16	17	18	19	20	21	22	23	24	25	26	27	28	29	30	31	32
57th FLOOR	435	737	968	1141	775	898	1344	1185	830	1086	881	452	1062	1581	1193	775	1025	1463	1199	786	1162	1111	2105	2429	1629	2267	2126	2123	2403	1655	2339	2184
56th FLOOR	461	780	1014	1181	799	930	1394	1224	854	1122	920	478	1105	1428	1233	799	1068	1514	1239	810	1202	1150	2186	2526	1689	2357	2203	2204	2500	1717	2432	2265
55th FLOOR	486	822	1060	1221	823	962	1445	1262	879	1158	959	505	1147	1476	1272	823	1091	1565	1279	833	1242	1190	2267	2623	1750	2448	2280	2286	2597	1778	2525	2345
54th FLOOR	512	865	1107	1261	846	994	1495	1301	904	1195	998	532	1189	1522	1312	846	1124	1615	1318	856	1282	1229	2348	2720	1811	2538	2358	2367	2694	1840	2618	2425
53rd FLOOR	539	909	1155	1302	871	1028	1547	1341	930	1232	1038	560	1233	1570	1353	871	1158	1668	1359	880	1324	1269	2429	2818	1873	2630	2436	2450	2792	1903	2713	2507
52nd FLOOR	565	951	1201	1342	895	1060	1598	1379	955	1269	1077	586	1275	1617	1393	895	1191	1719	1399	903	1364	1309	2510	2915	1933	2721	2514	2531	2889	1965	2806	2587
51st FLOOR	591	994	1247	1382	919	1093	1648	1418	980	1305	1116	613	1318	1664	1433	919	1224	1770	1439	926	1404	1348	2591	3012	1994	2811	2591	2612	2986	2027	2899	2667
50th FLOOR	616	1036	1294	1422	943	1125	1698	1457	1005	1341	1155	640	1360	1711	1473	943	1257	1820	1478	949	1444	1387	2672	3109	2055	2902	2668	2694	3084	2088	2992	2748
49th FLOOR	655	1100	1364	1479	980	1173	1772	1516	1042	1397	1215	681	1419	1780	1531	981	1306	1889	1537	985	1503	1446	2777	3214	2133	2994	2795	2824	3185	2169	3090	2861
MECH. FLOOR / 48th FLOOR	744	1226	1533	1673	1073	1287	1957	1655	1136	1535	1349	773	1559	1952	1666	1073	1418	2063	1671	1077	1644	1587	2951	3378	2263	3118	2970	2995	3351	2301	3219	3037
47th FLOOR	769	1268	1582	1715	1097	1320	2009	1697	1160	1574	1387	799	1600	2001	1708	1097	1452	2110	1711	1100	1684	1627	3034	3457	2323	3178	3052	3074	3429	2363	3281	3120
46th FLOOR	795	1311	1631	1757	1121	1354	2062	1740	1184	1613	1426	825	1641	2049	1750	1120	1485	2158	1750	1123	1725	1668	3116	3535	2384	3237	3133	3154	3507	2426	3342	3202
45th FLOOR	821	1353	1679	1799	1145	1387	2115	1782	1208	1652	1465	850	1682	2097	1791	1144	1519	2205	1790	1146	1765	1708	3198	3614	2445	3297	3214	3233	3586	2488	3404	3284
44th FLOOR	846	1396	1728	1841	1169	1421	2168	1825	1232	1691	1504	876	1724	2146	1833	1168	1553	2252	1830	1169	1806	1749	3280	3692	2505	3356	3296	3313	3664	2551	3466	3367
43rd FLOOR	874	1440	1779	1884	1194	1456	2222	1868	1257	1731	1547	903	1766	2195	1876	1193	1588	2301	1871	1193	1848	1791	3364	3772	2567	3417	3378	3394	3743	2614	3529	3450
42nd FLOOR	899	1482	1830	1926	1217	1490	2275	1911	1281	1770	1587	929	1807	2244	1917	1216	1622	2348	1911	1216	1888	1831	3446	3850	2628	3476	3460	3473	3822	2677	3590	3533
41st FLOOR	925	1525	1881	1968	1241	1523	2328	1953	1305	1809	1628	955	1849	2292	1959	1240	1656	2396	1950	1239	1929	1872	3528	3929	2688	3536	3541	3553	3900	2739	3652	3615
40th FLOOR	951	1567	1932	2010	1265	1557	2380	1996	1329	1848	1669	980	1890	2340	2000	1264	1689	2443	1990	1263	1969	1912	3610	4007	2749	3595	3622	3632	3978	2802	3713	3698
39th FLOOR	976	1609	1983	2052	1289	1591	2433	2038	1353	1886	1709	1006	1931	2389	2042	1287	1723	2490	2030	1286	2010	1953	3692	4086	2810	3655	3704	3712	4056	2864	3775	3780
38th FLOOR	1002	1652	2034	2093	1313	1624	2486	2081	1377	1925	1750	1032	1972	2437	2083	1311	1757	2537	2070	1309	2050	1994	3775	4164	2870	3714	3785	3791	4135	2927	3837	3862
37th FLOOR	1028	1695	2086	2136	1336	1658	2539	2123	1400	1965	1792	1058	2014	2487	2125	1335	1791	2585	2112	1332	2091	2034	3859	4245	2933	3775	3869	3873	4216	2991	3899	3947
36th FLOOR	1054	1738	2138	2179	1360	1691	2591	2165	1424	2005	1833	1083	2056	2537	2166	1358	1824	2634	2153	1355	2132	2075	3943	4325	2995	3835	3952	3955	4297	3055	3962	4032
35th FLOOR	1079	1781	2189	2222	1384	1725	2644	2208	1448	2045	1874	1109	2098	2587	2208	1382	1858	2682	2195	1378	2173	2116	4027	4406	3058	3896	4036	4036	4378	3120	4025	4116
34th FLOOR	1106	1826	2243	2267	1409	1760	2699	2252	1474	2086	1917	1136	2141	2639	2251	1407	1893	2732	2239	1402	2216	2159	4112	4488	3121	3958	4121	4119	4461	3185	4089	4202
33rd FLOOR	1132	1869	2294	2310	1433	1794	2751	2294	1498	2126	1958	1162	2183	2689	2292	1431	1927	2780	2281	1425	2257	2200	4196	4569	3184	4019	4204	4201	4542	3250	4152	4287
32nd FLOOR	1158	1913	2346	2353	1457	1827	2804	2337	1521	2166	2000	1188	2225	2739	2334	1454	1961	2828	2323	1448	2298	2241	4280	4650	3246	4079	4288	4282	4623	3314	4215	4372
31st FLOOR	1184	1956	2398	2396	1481	1861	2857	2379	1545	2206	2041	1213	2266	2789	2375	1478	1995	2876	2365	1471	2339	2282	4364	4730	3309	4140	4371	4364	4704	3378	4277	4456

NOTES:

1. FIRST COLUMN DIMENSION SHOWN IN SCHEDULE IS IN THE EAST-WEST DIRECTION.
2. LOADS ARE GIVEN IN KIPS, AND ARE ULTIMATE LOADS EXCEPT FOUNDATION LOADS, WHICH ARE GIVEN AS SERVICE LOADS.
3. CONCRETE STRENGTHS ARE INDICATED IN THE SCHEDULE.
4. COLUMN SIZES AND REINFORCEMENT ARE SHOWN ONLY WHERE SIZES START AND STOP. BLANK SPACES IN BETWEEN INDICATE SAME SIZE AS INDICATED ABOVE AND BELOW.
5. FOR SHEARWALL DETAILS, SEE S-940 SERIES DWGS.
6. FOR COLUMN DETAILS, SEE DWG. S-955.
7. BUTTRESS INDICATED AS "B" IN COLUMN SCHEDULE.
8. ● INDICATES A CHANGE IN HELD FACE OF THE COLUMN. SEE THE CORRESPONDING FRAMING PLANS.
9. ▼ ▲ INDICATES BEGINNING & ENDING OF MECH COUPLER SEE S-955 FOR TYPICAL DETAIL
10. ⊠ INDICATES COLUMN BEING PICKED UP.
11. ALL REBAR TO BE TENSION SPLICED OR USE MECHANICAL COUPLERS.
12. COLUMN TIES TWO FLOORS BELOW AND TWO FLOORS ABOVE OUTRIGGER TO MATCH COLUMN TIES SHOWN ON OUTRIGGER ELEVATIONS.
13. ALL #11 REINF. SHALL BE GRADE 75.

KEY PLAN: CHERRY ST · SOUTH STREET · FDR DRIVE (ELEVATED) · MANHATTAN BRIDGE

PROJECT NORTH · TRUE NORTH

DEVELOPER:
EXTELL DEVELOPMENT COMPANY
805 Third Ave, 7th Floor
New York, NY 10022
TEL: 212-712-6000 FAX: 212-712-6100

ARCHITECT OF RECORD:
AAI ARCHITECTS, P.C.
14 Wall Street, 2nd Floor
New York, NY 10005
TEL: 212-964-4040 FAX: 212-964-4090

INTERIOR DESIGNER:
MEYER DAVIS
180 Varick St, suite 404
New York, NY 10014
TEL: 212-627-5574

LANDSCAPE DESIGNER:
WEST 8 URBAN DESIGN & LANDSCAPE ARCHITECTURE P.C.
333 Hudson Street, Suite 905
New York, NY 10013
TEL: 212-285-0088 FAX: 212-285-0228

STRUCTURAL ENGINEERS:
WSP
228 East 45th Street
New York, NY 10017
TEL: 212-687-9888 FAX: 646-487-5501

MEP ENGINEERS:
ICOR ASSOCIATES, LLC
485 C Route 1 South, Suite 200
Iselin, NJ 08830
TEL: 908-272-3300 FAX: 908-272-4440

GEOTECHNICAL ENGINEERS:
LANGAN ENGINEERING & ENVIRONMENTAL SERVICES
21 Penn Plaza - 360 West 31st Street, 8th Floor
New York, NY 10001
TEL: 212.479.5400 FAX: 212.479.5444

No.	DESCRIPTION:	DATE:
	50% SD	02-28-14
	100% SD	04-25-14
	ISSUED FOR DOT	04-28-14
	FOUNDATION FILING	06-10-14
	FOUNDATION BID PACKAGE	07-25-14
	50% DD	08-01-14
	ISSUED FOR DOT	08-07-14
	ISSUED FOR FOUNDATION BID	08-29-14
	DESIGN DEVELOPMENT	10-07-14
	DESIGN DEVELOPMENT	10-07-14
	ISSUED FOR FOUNDATION BID	01-09-15
	ISSUED FOR FILING	02-13-15
	CONCRETE BID PACKAGE	03-06-15
	50% CONSTRUCTION DOCUMENTS	04-08-15
	ADDENDUM #5	05-01-15
	ISSUED FOR FILING	07-28-15
	80% CONSTRUCTION DOCUMENT	08-14-15
	ADDENDUM #14	10-22-15
	ADDENDUM #15	11-18-15
	ASI #54	02-08-16
	ASI #56	02-19-16
	ISSUE FOR CONSTRUCTION	03-18-16
1	ASI #62	04-29-16
2	ASI #71	07-29-16
3	ASI #73	08-19-16
4	ASI #82	01-16-17
5	ASI #85	03-01-17
6	ASI #86	03-17-17
	ISSUED FOR FILING	05-22-17

Discrepancies must be reported immediately to the Architect before proceeding. Only figured dimensions are to be used. Contractors must check all dimensions on site. This drawing is protected by copyright.

ALL DIMENSIONS ARE SHOWN IN IMPERIAL.

CONSULTANT: WSP

PROJECT: 250 SOUTH STREET, NEW YORK, NY

DRAWING TITLE: COLUMN SCHEDULE 1

SEAL & SIGNATURE:

DATE:	07/25/14
PROJECT No:	1302510
DRAWN:	CADD
CHK:	CL
SCALE:	N.T.S.
DWG No:	S-950.02
DOB PAGE No:	of

DOB EMPLOYEE STAMP: · DOB B-SCAN:

Tina Mathew, RA · APPROVED Under Directive 2 of 1975 · AMENDED APPLICATION · Date: 10/23/2017 · NYC Development Hub

30" x 42" Arch E1 - SHEET SIZE

DEPT OF BLDGS 121805638 Job Number
E3606734922 Scan Code

COLUMN SCHEDULE

FLOOR \ COL. NO.	1	2	3	4	5	6	7	8	9	10	11	12	13	14	15	16	17	18	19	20	21	22	23	24	25	26	27	28	29	30	31	32
73rd FLOOR																																
72nd FLOOR (f'c= 8000 psi, VARIES, 2'-1 1/2")			142 18 x 28 6–#10	282 20 x 24 4–#10 2#8	277 24 x 20 8–#9 2#8	329 18 x 28 6–#9	287 18 x 24 6–#9	350 22 x 24 4–#8 2#8	308 16 x 28 6–#8 2#8	311 16 x 28 6–#8 2#8	55 6–#7 2#8			296 20 x 36 6–#10	280 22 x 24 6–#11	277 28 x 28 12–#10	289 36 x 23 12–#10	312 24 x 42 8–#10	350 18 x 24 4–#8 2#8	306 16 x 28 6–#7 2#8	311 18 x 24 4–#8 2#8	280 6–#7 2#8	353 6–#7 2#8	304 24 x 28 6–#11 2#8	287 30 x 18 6–#10 2#8	290 20 x 30 6–#10 2#8	431 36 x 24 6–#10 2#8	347 6–#10 2#8	290 20 x 30 6–#9	299 30 x 24 6–#9	304 24 x 36 6–#10	423 36 x 20 8–#8
71st FLOOR																																
MECH. FLOOR (14'-2")	62 2#8	118 6–#7 16 x 24 4–#8	273 6–#9	525 4–#9 2#8	408 8–#7 2#8	416 6–#8 2#8	587 6–#8 2#8	587 6–#8 2#8	446 6–#7 2#8	530 24 x 16 4–#8 2#8	286 24 x 24 4–#8 2#8	65 2#8	358 6–#7 16 x 24 4–#8 2#8	661 18 x 28 6–#10	523 20 x 24 6–#11	408 8–#10 36 x 20	474 8–#10 36 x 20	617 18 x 36 8–#9	595 24 x 22 4–#8 2#8	431 2#8	549 28 x 18 6–#8 2#8	512 28 x 18 6–#8 2#8	870 30 x 18 6–#8 2#8	838 22 x 28 6–#9 2#8	685 28 x 18 6–#9 2#8	876 28 x 18 6–#9 2#8	938 30 x 18 6–#9 2#8	871 30 x 18 6–#9 2#8	917 30 x 18 6–#8 2#8	703 30 x 18 6–#8 2#8	911 18 x 32 6–#8 2#8	950 30 x 18 6–#8 2#8
70th FLOOR																																
69th FLOOR (10'-5")	95	175	336 6–#8	582	440	459	656	642	480	581 24 x 16	341	99	475	727 6–#9	633 6–#10	440 8–#10	568 12–#10	767 6–#8 16 x 24	650	462	605	567	982	1069	772 6–#8	999 6–#8	1046	984	1048	791	1037	1062
68th FLOOR (10'-3")	125	226	393	632	470	499	717	691	511	626	390	131	528	786	684 6–#10	470 8–#9	609 8–#10	829	700	491	655	616	1078	1186	847	1108	1138	1081	1163	866	1149	1157
67th FLOOR	155	275	447	682	500	538	776	739	542	671	437	162	579	842	733 6–#9	500	650 6–#10	889	748	520	704	664	1174	1302	920	1216	1230	1178	1279	940	1260	1253
66th FLOOR	184	323	500	730	529	576	834	786	573	715	484	192	629	898	781	529	690	947	795	548	752	711	1269	1418	993	1324	1323	1276	1395	1013	1371 6–#8	1349
65th FLOOR	213	370	553	777	558	613	892	832	603	758	529	223	678	953	828	558 8–#9	739	1006	841	576	799	757	1365	1534	1067	1433	1415	1373 6–#8	1510	1087	1482 6–#8	1445 6–#8
64th FLOOR	242	417	607	824	587	650	950	878	633	800	575	253	728	1008	876	587 8–#8	768	1065	887	604	846	803	1461	1650	1140	1541 6–#8	1507 6–#8	1470 6–#8	1626 6–#8	1161	1593	1541 6–#8
63rd FLOOR (10'-3")	271	465	660	871	615	686	1008	923	663	842	620	282	777	1064	923	615	806	1123	933	631	893	848	1557	1760	1213	1649 6–#10	1599 6–#9	1568	1742 6–#10	1234	1704	1637
62nd FLOOR (11'-4")	300	513	714	920	645	723	1067	970	694	886	667	313	828	1120	971	645	845	1184	980	660	941	895	1654 6–#8	1883 6–#9	1287	1758	1692	1666	1858	1309	1816	1734
61st FLOOR (10'-3")	328	560	767	967	672	759	1125	1016	723	928	712	342	877	1176	1019	672	883	1242	1027	687	988	941	1750 6–#8	1999 6–#10	1360	1866	1784	1763	1974	1382	1928	1829
60th FLOOR	356	607 16 x 24 4–#8	820 18 x 28 4–#8	1014	700	796 24 x 20 6–#8	1183 18 x 28 6–#8	1062	751 24 x 16	970 24 x 16	758 24 x 16	370	927 15 x 24 4–#8	1231	1066	700	921	1301 18 x 26 6–#8	1073 16 x 24 4–#8	714	1034 28 x 18	987 28 x 18	1846 30 x 18 6–#9	2116 22 x 28 6–#10	1433 28 x 18	1975 18 x 30	1876 30 x 18	1880 30 x 18	2090 18 x 30	1456 30 x 18	2039 18 x 30 6–#8	1925 30 x 18
59th FLOOR (10'-3")	384	656 18 x 26 6–#8	875 20 x 32 6–#8	1062 4–#9	727	833 30 x 20 6–#9	1243 20 x 32 6–#9	1108	780 24 x 18	1013 24 x 18	804 24 x 18	399	977 15 x 26 6–#8	1287 18 x 30 6–#8	1113	727	959	1361 20 x 30 6–#9	1120 16 x 26 6–#8	740	1082 30 x 18	1033 30 x 18	1944 34 x 22 6–#10	2234 28 x 30 8–#10	1507 32 x 18	2085 22 x 34	1971 36 x 20	1960 36 x 20 6–#9	2208 22 x 36 6–#10	1531 30 x 22 6–#9	2153 22 x 36 6–#10	2024 36 x 20 6–#9
58th FLOOR (f'c= 8000 psi, 10'-0")	409 2#8	696 6–#7 15 x 26 6–#8	921 6–#8 20 x 32 6–#8	1101 20 x 24 4–#9 2#8	751 8–#7 2#8	865 30 x 20 6–#9	1293 20 x 32 6–#8	1146 2#8	805 6–#7 2#8	1049 24 x 16 6–#7 2#8	842 24 x 16 4–#8 2#8	425 2#8	1020 15 x 26 6–#7 2#8	1334 18 x 30 6–#8 2#8	1153 20 x 24 6–#9 2#8	751 6–#9 2#8	992 36 x 20 6–#10 2#8	1412 16 x 26 6–#9 2#8	1159 6–#8 2#8	763 6–#7 2#8	1122 30 x 18 6–#8 2#8	1072 30 x 18 6–#8 2#8	2025 34 x 22 6–#8 2#8	2331 28 x 30 6–#10 2#8	1568 32 x 18 6–#8 2#8	2176 22 x 34 6–#10 2#8	2048 36 x 20 6–#9 2#8	2041 36 x 20 6–#10 2#8	2306 22 x 36 6–#10 2#8	1593 30 x 22 6–#9 2#8	2246 22 x 36 6–#10 2#8	2104 36 x 20 6–#10 2#8
FLOOR \ COL. NO.	1	2	3	4	5	6	7	8	9	10	11	12	13	14	15	16	17	18	19	20	21	22	23	24	25	26	27	28	29	30	31	32

NOTES:

1. FOR BALANCE OF INFORMATION SEE DRAWING S-950.

KEY PLAN:

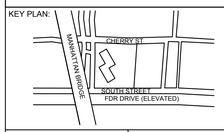

PROJECT NORTH

TRUE NORTH

DEVELOPER:
EXTELL DEVELOPMENT COMPANY
805 Third Ave, 7th Floor
New York, NY 10022
TEL: 212-712-6000 FAX: 212-712-6100

ARCHITECT OF RECORD:
AAI ARCHITECTS, P.C.
14 Wall Street, 2nd Floor
New York, NY 10005
TEL: 212-964-4040 FAX: 212-964-4090

INTERIOR DESIGNER:
MEYER DAVIS
180 Varick St, suite 404
New York, NY 10014
TEL: 212-627-5574

LANDSCAPE DESIGNER:
WEST 8 URBAN DESIGN & LANDSCAPE ARCHITECTURE P.C.
333 Hudson Street, Suite 905
New York, NY 10013
TEL: 212-285-0088 FAX: 212-285-0228

STRUCTURAL ENGINEERS:
WSP
228 East 45th Street
New York, NY 10017
TEL: 212-687-9888 FAX: 646-487-5501

MEP ENGINEERS:
ICOR ASSOCIATES, LLC
485 C Route 1 South, Suite 200
Iselin, NJ 08830
TEL: 908-272-3300 FAX: 908-272-4440

GEOTECHNICAL ENGINEERS:
LANGAN ENGINEERING & ENVIRONMENTAL SERVICES
21 Penn Plaza - 360 West 31st Street, 8th Floor
New York, NY 10001
TEL: 212.479.5400 FAX: 212.479.5444

No.	DESCRIPTION:	DATE:
	50% SD	02-28-14
	100% SD	04-25-14
	ISSUED FOR DOT	04-28-14
	FOUNDATION FILING	06-10-14
	FOUNDATION BID PACKAGE	07-25-14
	50% DD	08-01-14
	ISSUED FOR FOUNDATION BID	08-29-14
	DESIGN DEVELOPMENT	10-07-14
	ADDENDUM #5	05-01-15
	ISSUED FOR FILING	07-28-15
	80% CONSTRUCTION DOCUMENT	08-14-15
	ADDENDUM #15	11-18-15
	ASI #54	02-08-16
	ISSUE FOR CONSTRUCTION	03-18-16
	ISSUED FOR FILING	05-22-17

Discrepancies must be reported immediately to the Architect before proceeding. Only figured dimensions are to be used. Contractors must check all dimensions on site. This drawing is protected by copyright.

ALL DIMENSIONS ARE SHOWN IN IMPERIAL.

CONSULTANT:
WSP

PROJECT:
250 SOUTH STREET
NEW YORK, NY

DRAWING TITLE:
COLUMN
SCHEDULE 2

SEAL & SIGNATURE:

DATE:	07/25/14
PROJECT No:	1302510
DRAWN: CADD	REV:
CHK: CL	
SCALE: N.T.S.	

DWG No:
S-951.01

DOB PAGE No: of

DOB EMPLOYEE STAMP:

DOB B-SCAN:

FILE NAME:
PLOT DATE:

30" x 42" Arch E1 - SHEET SIZE
DEPT OF BLDGS 121185528 Job Number
E5860276799 Scan Code

STEEL COLUMN SCHEDULE 1

COL. NO.	FLOOR	5TH FL.	4TH FL.	3RD FL.	2ND FL.	1ST FL.	CELLAR	PIER	BASE PLATE AND BOTTOM OF BASE PL. EL.	No. OF A.B.	ANCHOR BOLTS F1554 GR 36 (U.O.N) SEE TYP. DETAILS
X-A	1		W14 x 176				W14 x 176		24x22x1⅜		
X-A	3.2		W14 x 233				W14 x 233		26x22x1¾		
X-A	4		W14 x 211				W14 x 211		26x22x1¾		
B	1		W14 x 145				W14 x 145		24x22x1⅜		
B	3		W14 x 176				W14 x 176		26x22x1¾		
C	1		W14 x 159				W14 x 159		24x22x1¾		
C	3		W14 x 193				W14 x 193		26x22x2¼		
D	5		W14 x 132				W14 x 132		24x22x1⅜		
D	7		W10 x 54				W10 x 54		20x16x1¼		
E	7						W12 x 87		22x20x1⅜		
F	9						W12 x 87		22x20x1⅜		
G	1		W12 x 96				W12 x 96		22x20x1½		
G	5						W12 x 96		22x20x1½		
J	4						W14 x 132		24x22x1⅜		
J	8						HSS16x0.625		22x22x1½		
J	11						W14 x 132		24x22x1⅜		
K	P-10						W14 x 120		24x22x1⅜		
K	2						W14 x 132		24x22x1⅜		
L	4						W14 x 120		24x22x1⅜		
L	8						HSS16x0.625		22x22x1½		
L	11						W14 x 109		24x22x1¼		
M	1			W12X120		W12X120	W14X145		24X22X1⅜		
M	P-10			W12X120		W12X120					
M	P-12						W14 x 145		24x22x1⅜		
T-E	WT-2		W14 x 109				W14 x 109		24x22x1¼		
T-F	T-1		W12 x 79				W12 x 79		BP-11 22x20x1½		
T-F	T-2		W14 x 176				W14 x 176		24x22x1¾		
T-G	T-2		W14 x 90				W14 x 90		24x22x1½		
T-H	1		W12 x 87				W12 x 87		22x20x1½		
T-H	T-2		W14 x 145				W14 x 145		24x22x1½		
WT-D	P-48				W14 x 109		W14 x 109		24x22x1½		
P-B	P-50				W12 x 53		W12 x 53		22x20x1¼		
P-C	P-30						W12 x 96		22x20x1½		

NOTES:

1. COLUMN LOADS SHOWN IN SCHEDULE ARE LRFD FACTORED LOADS IN KIPS.
2. ALL COLUMNS SHALL BE ASTM A-992 (Fy=50 KSI) STEEL U.O.N. WITH AN ASTERISK (*) INDICATING A-36 (Fy=36 KSI) STEEL.
3. ALL BASE PLATES TO BE ASTM A-572 (Fy=50 KSI) U.O.N.
4. FIRST DIMENSION OF BASE PLATE IS PARALLEL TO COLUMN WEB.
5. FIRST DIMENSION OF BUTTRESS AND PIERS IS IN EAST/WEST DIRECTION.
6. ALL SPLICES TO BE 4'-0" ABOVE FINISHED FLOOR, EXCEPT BRACED FRAMES COLUMNS SPLICES SHALL BE IN THE MIDDLE THIRD OF THE FLOOR TO FLOOR HEIGHT.
7. FLOOR TO FLOOR DIMENSIONS SHOWN ARE TO TOP OF CONCRETE SLAB.
8. COLUMN SPLICE ELEVATION SHALL BE MAINTAINED AT THE THEORETICAL ELEVATION BY SHIMMING AT EVERY SECOND TIER.
9. HEAVY LINE AT TOP INDICATES TOP OF COLUMN. HEAVY LINE AT BOTTOM OF COLUMN INDICATES BOTTOM OF BASE PL. TOP AND BOTTOM OF COLUMN ELEVATIONS ARE TO BE CONFIRMED WITH FRAMING PLANS, FOUNDATION PLANS AND SECTIONS. GC TO COORDINATE.
10. ⊠ INDICATES EITHER BEAM RUNNING OVER COLUMN OR COLUMN SITTING OVER BEAM.
11. * INDICATES COLUMNS THAT ARE PART OF LATERAL SYSTEM
12. (…) INDICATES COLUMNS DESIGNED FOR VEHICULAR IMPACT
13. FOR COLUMN BASE PLATE DETAILS AND SPLICE REQUIREMENTS, SEE DWG. S-957 & S-958
14. THE ANCHOR BOLTS LENGTH TO BE IN ACCORDANCE TO SCHEDULE FOR COMPRESSION IN DWG. S-957, UNLESS LENGTH (LE) FOR COLUMNS IN TENSION IS SHOWN IN THE COLUMN SCHEDULE.
15. T… INDICATES SPLICE OR HANGER CONNECTION TENSION FACTORED LOAD IN KIPS. ALL WELDS AT TENSION CONNECTIONS TO BE FULLY INSPECTED.
16. FOR GENERAL NOTES, SEE DWG. FO-001 & FO-002.

LEGEND:

- B INDICATES BUTTRESS
- P INDICATES PIER (SEE NOTE 6/DWG. FO-100)
- LE INDICATES BOLT EMBEDMENT LENGTH
- (T) INDICATES REBARS TENSION SPLICE

STEEL COLUMN SCHEDULE 2

COL. NO.	FLOOR	5TH FL.	4TH FL.	3RD FL.	2ND FL.	1ST FL.	CELLAR	PIER	BASE PLATE AND BOTTOM OF BASE PL. EL.	No. OF A.B.	ANCHOR BOLTS F1554 GR 36 (U.O.N) SEE TYP. DETAILS
P-E	P-48				W14 x 90		W14 x 90		24x22x1¼		
P-E	P-50				W12 x 72		W12 x 72		22x18x1¼		
P-E	P-52				W12 x 72		W12 x 72		22x18x1¾		
P-F	P-50				W12 x 65		W12 x 65		22x18x1¼		
P-G	P-30						W14 x 99		24x22x1¼		
P-G	P-35						W12 x 87		22x20x1⅜		
P-G.8	P-42				W12 x 87		W12 x 87		22x20x1⅜		
P-G.8	P-45				W12 x 72		W12 x 72		22x18x1¼		
P-G.8	P-48				W12 x 65		W12 x 65		22x18x1¼		
P-G.8	P-50				W12 x 65		W12 x 65		22x18x1¼		
P-H	1						W12 x 79		22x20x1¼		
P-H	P-14						W14 x 176		BP-1 34x20x1¾	9	
P-H	P-18						W14 x 176		BP-1 34x20x1¾	9	
P-H	P-22						W14 x 159		24x22x1¾		
P-H	P-26						W14 x 159		24x22x1¾		
P-H	P-30						W14 x 159		24x22x1¾		
P-H	P-34						W14 x 132		24x22x1⅜		
P-H	P-36					W14 x 109	W14 x 109		24x22x1¼		
P-H	P-40					W14 x 90	W14 x 90		24x22x1¼		
P-J	P-40				W12 x 65	W12 x 65					
P-J	P-42				W14 x 90		W14 x 90		24x22x1¼		
P-J	P-45				W14 x 132		W14 x 132		24x22x1½		
P-J	P-50				W14 x 90		W14 x 90		24x22x1¼		
P-J.3	P-40						W12 x 65		22x18x1¼		
P-K	1						W12 x 65		22x18x1¼		
P-K	P-10			W14 x 233			W14 x 233		26x22x2¼		
P-K	P-17			W14 x 311			W14 x 311		28x22x2½		
P-K	P-23			W14 x 311			W14 x 311		28x22x2½		
P-K	P-27			W14 x 342			W14 x 342		28x24x2¾		
P-K	P-33			W14 x 311			W14 x 311		28x22x2½		
P-K	P-40			W14 x 370			W14 x 370		BP-1A 38x24x3	9	1½"ø GR 55
P-K	P-46			W14 x 233			W14 x 233		26x22x2¼		
P-K	P-50			W14 x 211			W14 x 211		26x22x1¾		
P-K	P-51			W14 x 342			W14 x 342		28x24x2¾		
P-K	P-55			W14 x 311			W14 x 311		28x22x2½		
P-K	P-58.7			W14 x 311			W14 x 311		28x22x2½		
P-K	P-65			W14 x 398	W14 x 398			B36x30 12-#10	BP-3 38x22x2½	8	1½"ø GR 55
P-K	Y-2			W12 x 65		W12 x 65					
P-K.5	P-40				3'-10"		W12 x 65		BP-1 34x20x1¾	9	1½"ø GR 55
P-L	1						W14 x 109		24x22x1¼		
P-L	P-10			W14 x 109			W14 x 109		24x22x1¼		
P-L	P-13			W14 x 132			W14 x 132		BP-2 34x28x2¼	9	1½"ø GR 55
P-L	P-17			W14 x 132			W14 x 132		BP-2 34x28x2¼	9	1½"ø GR 55
P-L	Y-2			W12 x 65		W12 x 65					
P-M	P-40			W14 x 370			W14 x 370		BP-2A 38x32x3	9	1½"ø GR 55
P-M	P-46			W14 x 342			W14 x 342		BP-1b 30x32x3		1½"ø GR 55
P-M	P-50.2			W14 x 342			W14 x 342		28x24x3		
P-M	P-51			W14 x 342			W14 x 342		28x24x3		
P-M	P-55			W14 x 370			W14 x 370		28x24x3 + 36x36 8 - #8		
P-M	P-59			W14 x 342		W14 x 342		38x38 12-#10	28x24x2¾		
P-M	65			W14 x 370	W14 x 370	3'-10"		40 x 48 16-#10	BP-4 34x22x2½	8	1½"ø GR 55

KEY PLAN:

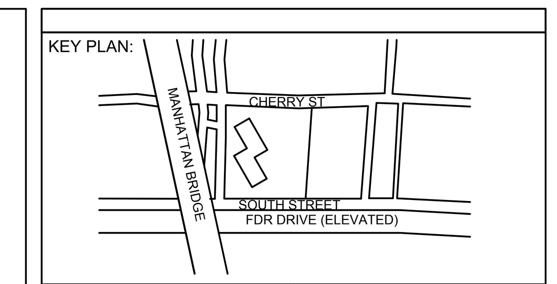

PROJECT NORTH
TRUE NORTH

DEVELOPER:
EXTELL DEVELOPMENT COMPANY
805 Third Ave, 7th Floor
New York, NY 10022
TEL: 212-712-6000 FAX: 212-712-6100

ARCHITECT OF RECORD:
AAI ARCHITECTS, P.C.
14 Wall Street, 2nd Floor
New York, NY 10005
TEL: 212-964-4040 FAX: 212-964-4090

INTERIOR DESIGNER:
MEYER DAVIS
180 Varick St, suite 404
New York, NY 10014
TEL: 212-627-5574

LANDSCAPE DESIGNER:
WEST 8 URBAN DESIGN & LANDSCAPE ARCHITECTURE P.C.
333 Hudson Street, Suite 905
New York, NY 10013
TEL: 212-285-0088 FAX: 212-285-0228

STRUCTURAL ENGINEERS:
WSP
228 East 45th Street
New York, NY 10017
TEL: 212-687-9888 FAX: 646-487-5501

MEP ENGINEERS:
ICOR ASSOCIATES, LLC
485 C Route 1 South, Suite 200
Iseline, NJ 08830
TEL: 908-272-3300 FAX: 908-272-4440

GEOTECHNICAL ENGINEERS:
LANGAN ENGINEERING & ENVIRONMENTAL SERVICES
21 Penn Plaza - 360 West 31st Street, 8th Floor
New York, NY 10001
TEL: 212.479.5400 FAX: 212.479.5444

No.	DESCRIPTION:	DATE:
	ISSUED FOR FOUNDATION BID	07-25-14
	50% DD	08-01-14
	ISSUED FOR DOT	08-07-14
	ISSUED FOR FOUNDATION BID	08-29-14
	DESIGN DEVELOPMENT	10-07-14
	ISSUED FOR FOUNDATION BID	01-09-15
	ISSUED FOR FILING	02-13-15
	STEEL BID PACKAGE	02-24-15
	ADDENDUM #3	03-27-15
	50% CONSTRUCTION DOCUMENTS	04-08-15
	ADDENDUM #4	04-24-15
	ADDENDUM #5	05-01-15
	ADDENDUM #10	07-22-15
	ISSUED FOR FILING	07-28-15
	80% CONSTRUCTION DOCUMENT	08-14-15
	90% CONSTRUCTION DOCUMENTS	01-15-16
	ADDENDUM #16	02-04-16
	ASI#59	03-11-16
	ISSUE FOR CONSTRUCTION	03-18-16
	ISSUED FOR FILING	05-22-17

Discrepancies must be reported immediately to the Architect before proceeding. Only figured dimensions are to be used. Contractors must check all dimensions on site. This drawing is protected by copyright.

ALL DIMENSIONS ARE SHOWN IN IMPERIAL.

CONSULTANT: WSP

PROJECT: **252 SOUTH STREET** NEW YORK, NY

DRAWING TITLE: STEEL COLUMN SCHEDULE 1

SEAL & SIGNATURE: STATE OF NEW YORK · AHMAD RAHIMIAN · No. 065537 · LICENSED PROFESSIONAL ENGINEER

DATE:	07/25/14
PROJECT No:	1302510
DRAWN:	CADD
CHK:	CL
SCALE:	N.T.S.
REV:	
DWG No:	**S-953.01**
DOB PAGE No:	of

DOB EMPLOYEE STAMP: Tina Mathew, RA — NYC Buildings — APPROVED Under Directive 2 of 1975 — AMENDED APPLICATION — Date: 10/23/2017 — NYC Development Hub

DOB B-SCAN:

FILE NAME:
PLOT DATE:

DEPT OF BLDGS121105539 Job Number
B57432587R5 Scan Code
30" x 42" Arch E1 - SHEET SIZE

STEEL COLUMN SCHEDULE 3

COL. NO. / FLOOR		P–N		P–P				P–Q			P–R		P–S		P–T																		P–U		P–V					P–W												
		P–13	P–17	P–23	P–27	P–33	P–40	P–15	P–17		P–10	Y–2	P–15	P–17	P–10	P–17	P–23	P–27	P–33	P–40	P–46	P–50.2	P–51	P–55	P–58	P–58.7	P–60	65	Y–2			P–33	P–40		P–3	P–10	P–17	P–23	P–27		P–3	P–10	P–17	P–23	P–27	P–33	P–40	P–46	P–50.2	P–51	P–55	P–58	P–60	65
5TH FL.																																																			
4TH FL.																																																			
3RD FL.		W4 x 132	W4 x 233	W4 x 283	W4 x 283	W4 x 283	W4 x 370	W4 x 132	W4 x 193		W4 x 132		W12 x 170	W12 x 170	W4 x 193	W4 x 257	W4 x 257	W4 x 257	W4 x 233	W4 x 370	W4 x 342	W4 x 342	W4 x 342	W4 x 455			W4 x 398	W4 x 398				W4 x 90	W4 x 109		W4 x 90	W4 x 99	W4 x 99	W4 x 90		W10 x 54	W10 x 54	W10 x 54	W10 x 54	W10 x 54	W12 x 72	W12 x 65	W14 x 109	W14 x 132	W14 x 132	W14 x 132	W14 x 132	W14 x 145
2ND FL.												W12 x 65															3'-10"	W14x398	W12 x 65			W14 x 90	W14 x 109	W12 x 72	W4 x 90	W4 x 99	W4 x 99	W4 x 90		W10 x 54	W10 x 54	W10 x 54	W10 x 54	W10 x 54	W12 x 72							
1ST FL.												W12 x 65													W12 x 72	W14x398		W12 x 65			W12 x 72								W10 x 54	W10 x 54	W10 x 54	W10 x 54	W10 x 54	W12 x 72							
CELLAR		W4 x 132	W4 x 233	W4 x 283	W4 x 283	W4 x 283	W4 x 370	W4 x 132	W4 x 193		W4 x 132		W12 x 170	W12 x 170	W4 x 193	W4 x 257	W4 x 257	W4 x 257	W4 x 233	W4 x 370	W4 x 342	W4 x 342	W4 x 342	W4 x 455	W4 x 99	W12 x 72					W4 x 90	W4 x 109		W4 x 90	W4 x 99	W4 x 99	W4 x 90													
PIER																										B38 x 38 12–#10	B44 x 30 12–#10													B38 x 69 26–#10	B38 x 30 8–#8	B38 x 30 8–#8	B38 x 30 6–#8	B38 x 30 8–#8	B38 x 30 8–#8	B38 x 30 12–#10	B40 x 30 12–#10	B40 x 30 12–#10	B40 x 30 12–#10	B40 x 30 12–#10	B40 x 30 12–#10	B40 x 30 12–#10	B48 x 30 12–#10	B48 x 30 12–#10
BASE PLATE AND BOTTOM OF BASE PL. EL.		BP–1 34x20x¾	BP–1 34x20x¾	26x24x2¼	26x24x2¼	26x24x2½	BP–1a 38x24x3	BP–1 34x20x¾	BP–1 34x20x¾		24x22x⅞		BP–1c 26x32x2¼	BP–1c 26x32x2¼	26x22x⅞	26x22x2½	26x22x2¾	26x22x2¾	26x22x2¼	BP–2a 38x32x3	BP–1b 30x32x3	30x24x3	30x24x3	28x24x3	22x20x⅝	BP–13 22x20x¼	BP–12 30x24x3	BP–5 38x22x2½				24x22x1¼	24x22x1¼		24x22x1¼	24x22x1¼	24x22x1¼	24x22x1¼		20x18x¼	20x18x¼	20x18x¼	20x18x¼	20x18x¼	20x18x¼	22x18x¼	24x22x¼	24x22x¼	24x22x⅜	24x22x⅜	26x22x2¼	24x22x⅜	26x22x⅜	24x22x⅜
No. OF A.B.		9	9				9	9	9				9	9						9	7						6	8																								
ANCHOR BOLTS F1554 GR 36 (U.O.N) SEE TYP. DETAILS		1½"ø (GR–55)	1½"ø (GR–55)				1½"ø (GR–55)	1½"ø (GR–55)	1½"ø (GR–55)		1½"ø (GR–55)		1½"ø (GR–55)	1½"ø (GR–55)						1½"ø (GR–55)	1½"ø (GR–55)					1"ø HILTI HVI–50 W/ I–CP EMBED		1½"ø (GR–55)																								
FLOOR / COL. NO.		P–13	P–17	P–23	P–27	P–33	P–40	P–15	P–17		P–10	Y–2	P–15	P–17	P–10	P–17	P–23	P–27	P–33	P–40	P–46	P–50.2	P–51	P–55	P–58	P–58.7	P–60	65	Y–2			P–33	P–40		P–3	P–10	P–17	P–23	P–27		P–3	P–10	P–17	P–23	P–27	P–33	P–40	P–46	P–50.2	P–51	P–55	P–58	P–60	65
		P–N		P–P				P–Q			P–R		P–S		P–T																		P–U		P–V					P–W												

FOR NOTES AND LEGEND SEE S–953

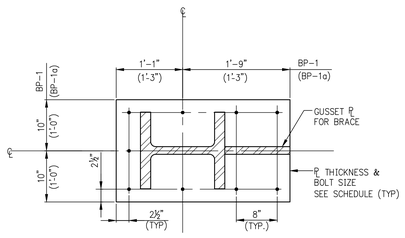

BP–1
(BP–1a)

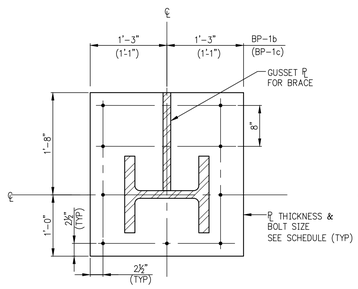

BP–1b
(BP–1c)

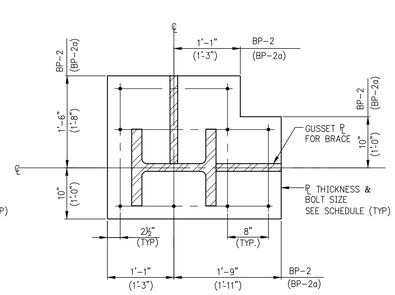

BP–2
(BP–2a)

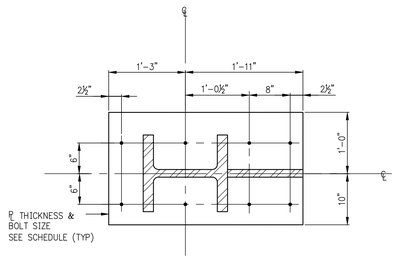

BP–3

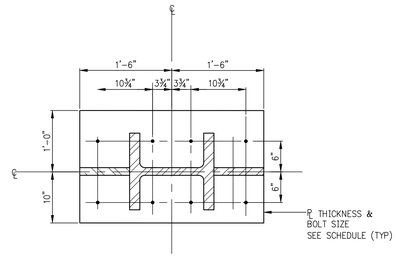

BP–4

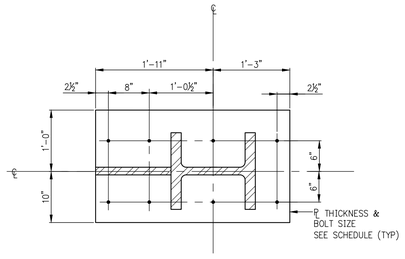

BP–5

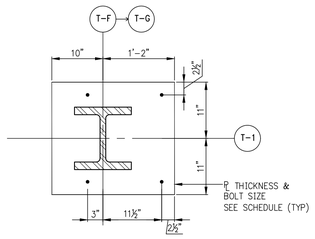

BP–11

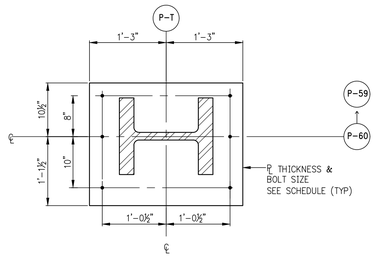

BP–12

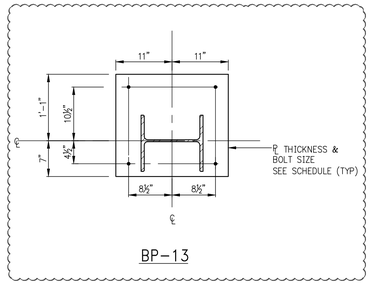

BP–13

BASE PLATE DETAILS

KEY PLAN:

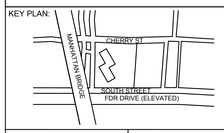

PROJECT NORTH / TRUE NORTH

DEVELOPER:
EXTELL DEVELOPMENT COMPANY
805 Third Ave, 7th Floor
New York, NY 10022
TEL: 212-712-6000 FAX: 212-712-6100

ARCHITECT OF RECORD:
AAI ARCHITECTS, P.C.
14 Wall Street, 2nd Floor
New York, NY 10005
TEL: 212-964-4040 FAX: 212-964-4090

INTERIOR DESIGNER:
MEYER DAVIS
180 Varick St, suite 404
New York, NY 10014
TEL: 212-627-5574

LANDSCAPE DESIGNER:
WEST 8 URBAN DESIGN & LANDSCAPE ARCHITECTURE P.C.
333 Hudson Street, Suite 905
New York, NY 10013
TEL: 212-285-0088 FAX: 212-285-0228

STRUCTURAL ENGINEERS:
WSP
228 East 45th Street
New York, NY 10017
TEL: 212-687-9888 FAX: 646-487-5501

MEP ENGINEERS:
ICOR ASSOCIATES, LLC
485 C Route 1 South, Suite 200
Iselin, NJ 08830
TEL: 908-272-3300 FAX: 908-272-4440

GEOTECHNICAL ENGINEERS:
LANGAN ENGINEERING & ENVIRONMENTAL SERVICES
21 Penn Plaza - 360 West 31st Street, 8th Floor
New York, NY 10001
TEL: 212.479.5400 FAX: 212.479.5444

No.	DESCRIPTION:	DATE:
	ISSUED FOR FOUNDATION BID	07–25–14
	50% DD	08–01–14
	ISSUED FOR FOUNDATION BID	08–29–14
	DESIGN DEVELOPMENT	10–07–14
	ISSUED FOR FOUNDATION BID	01–09–15
	ISSUED FOR FILING	02–13–15
	STEEL BID PACKAGE	02–24–15
	ADDENDUM #3	03–27–15
	50% CONSTRUCTION DOCUMENTS	04–08–15
	ADDENDUM #4	04–24–15
	ADDENDUM #5	05–01–15
	ADDENDUM #10	07–22–15
	ISSUED FOR FILING	07–28–15
	80% CONSTRUCTION DOCUMENT	08–14–15
	ADDENDUM #11	09–25–15
	ADDENDUM #14	10–22–15
	90% CONSTRUCTION DOCUMENTS	01–15–16
	ADDENDUM #16	02–04–16
	ASI#59	03–11–16
	ISSUE FOR CONSTRUCTION	03–18–16
	ISSUED FOR FILING	05–22–17

Discrepancies must be reported immediately to the Architect before proceeding. Only figured dimensions are to be used. Contractors must check all dimensions on site. This drawing is protected by copyright.

ALL DIMENSIONS ARE SHOWN IN IMPERIAL.

CONSULTANT:
WSP

PROJECT:
252 SOUTH STREET
NEW YORK, NY

DRAWING TITLE:
STEEL COLUMN SCHEDULE 2

SEAL & SIGNATURE:
STATE OF NEW YORK — AHMAD RASTEGAR — No. 085857 — LICENSED PROFESSIONAL ENGINEER

DATE:	07/25/14
PROJECT No:	1302510
DRAWN: CADD	REV:
CHK: CL	
SCALE: N.T.S.	
DWG No:	**S-954.01**
DOB PAGE No:	of

DOB EMPLOYEE STAMP:
Tina Mathew, RA
APPROVED
Under Directive 2 of 1975
AMENDED APPLICATION
Date: 10/23/2017
NYC Development Hub

DOB B-SCAN:

FILE NAME:
PLOT DATE:

DEPT OF BLDGS121185539 Job Number
IE5099289042 Scan Code

30" x 42" Arch E1 - SHEET SIZE

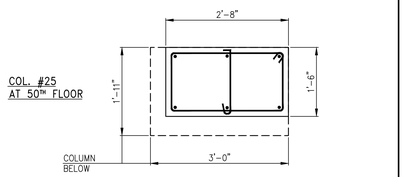

COLUMN #25 DETAILS
SCALE: ¾"=1'-0"

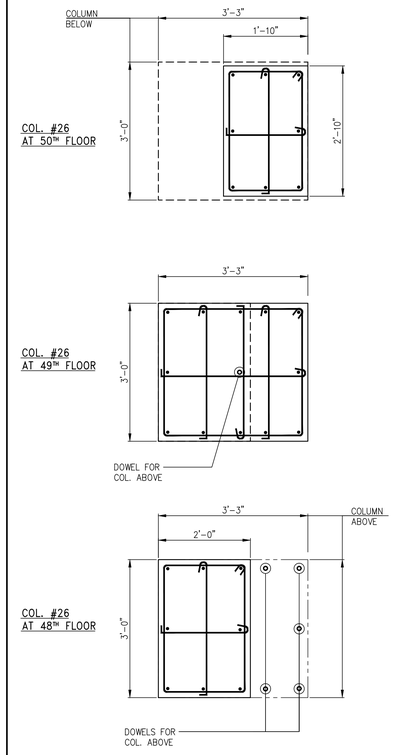

COLUMN #26 DETAILS
SCALE: ¾"=1'-0"

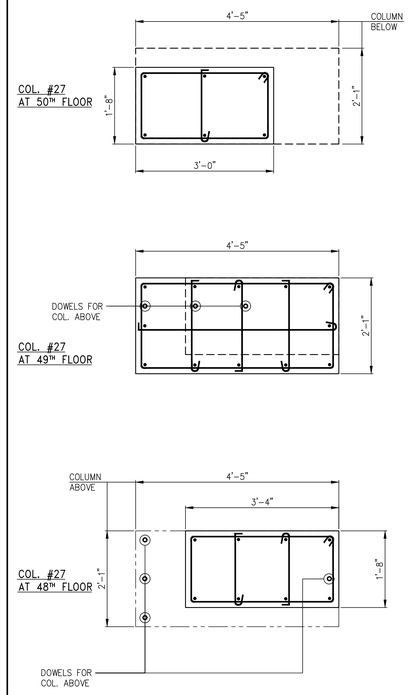

COLUMN #27 DETAILS
SCALE: ¾"=1'-0"

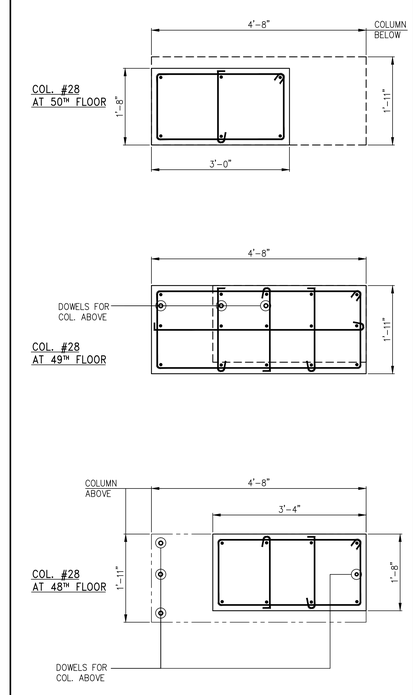

COLUMN #28 DETAILS
SCALE: ¾"=1'-0"

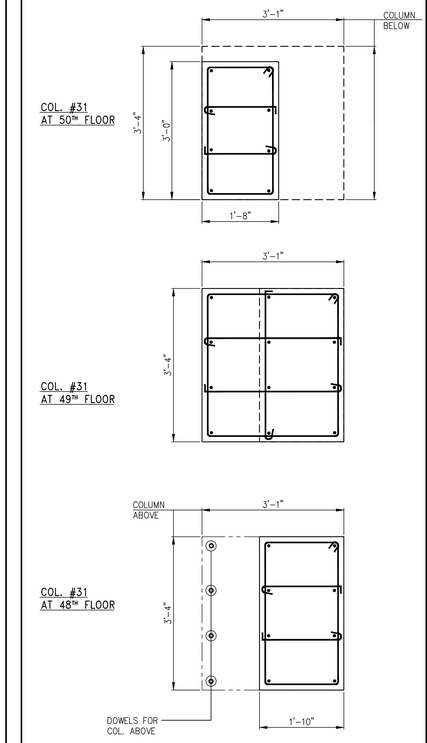

COLUMN #31 DETAILS
SCALE: ¾"=1'-0"

FILE NAME:
PLOT DATE:

KEY PLAN:

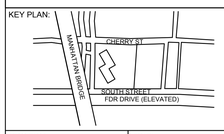

PROJECT NORTH

TRUE NORTH

DEVELOPER:
EXTELL DEVELOPMENT COMPANY
805 Third Ave, 7th Floor
New York, NY 10022
TEL: 212-712-6000 FAX: 212-712-6100

ARCHITECT OF RECORD:
AAI ARCHITECTS, P.C.
14 Wall Street, 2nd Floor
New York, NY 10005
TEL: 212-964-4040 FAX: 212-964-4090

INTERIOR DESIGNER:
MEYER DAVIS
180 Varick St, suite 404
New York, NY 10014
TEL: 212-627-5574

LANDSCAPE DESIGNER:
WEST 8 URBAN DESIGN & LANDSCAPE ARCHITECTURE P.C.
333 Hudson Street, Suite 905
New York, NY 10013
TEL: 212-285-0088 FAX: 212-285-0228

STRUCTURAL ENGINEERS:
WSP
228 East 45th Street
New York, NY 10017
TEL: 212-687-9888 FAX: 646-487-5501

MEP ENGINEERS:
ICOR ASSOCIATES, LLC
485 C Route 1 South, Suite 200
Iseline, NJ 08830
TEL: 908-272-3300 FAX: 908-272-4440

GEOTECHNICAL ENGINEERS:
LANGAN ENGINEERING & ENVIRONMENTAL SERVICES
21 Penn Plaza - 360 West 31st Street, 8th Floor
New York, NY 10001
TEL: 212.479.5400 FAX: 212.479.5444

No.	DESCRIPTION:	DATE:
1	ASI #86	03-17-17
	ISSUED FOR FILING	05-22-17

Discrepancies must be reported immediately to the Architect before proceeding. Only figured dimensions are to be used. Contractors must check all dimensions on site. This drawing is protected by copyright.

ALL DIMENSIONS ARE SHOWN IN IMPERIAL.

CONSULTANT:
WSP

PROJECT:
252 SOUTH STREET
NEW YORK, NY

DRAWING TITLE:
COLUMN DETAILS

SEAL & SIGNATURE:

DATE:	07/25/14
PROJECT No:	1302510
DRAWN: CADD	REV:
CHK: CL	
SCALE: N.T.S.	
DWG No:	S-956.00
DOB PAGE No:	of

DOB EMPLOYEE STAMP:

DOB B-SCAN:

DEPT OF BLDGS121105029 Job Number
E3505133184 Scan Code
30" x 42" Anth E1 - SHEET SIZE

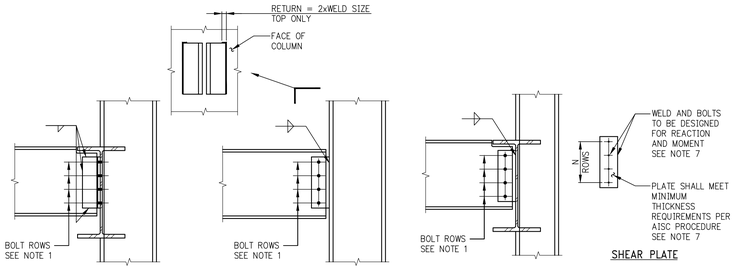

CONNECTION WELDED TO BEAMS BOLTED TO COLUMN OR GIRDER

CONNECTION BOLTED TO BEAM WELDED TO COLUMN

CONNECTION BOLTED TO BEAMS WELDED TO COLUMN OR GIRDER

DOUBLE ANGLE CONNECTIONS TO BEAM OR COLUMN
NOTE: CONNECTION SIMILAR WHEN CONNECTING TO GIRDER OR COLUMN (SHOWN AS DASHED LINE)

SHEAR PLATE CONNECTIONS TO BEAM OR COLUMN
NOTE: CONNECTION SIMILAR WHEN CONNECTING TO GIRDER OR COLUMN (SHOWN AS DASHED LINE)

SIMPLE SHEAR CONECTIONS

(THESE CONNECTIONS MAY BE USED AT TYPE B MOMENT CONNECTIONS. FOR TYPE A MOMENT CONNECTIONS, SEE TYPE A SHEAR CONNECTIONS IN DWG. S-601.)

DESIGN OF SIMPLE SHEAR CONNECTIONS – REQUIREMENTS

1. SIMPLE SHEAR CONNECTIONS SHALL BE DESIGNED FOR THE REACTION SHOWN ON THE DRAWINGS OR THE GREATEST OF THE FOLLOWING:
   a) FOR COMPOSITE BEAMS, REACTION FROM AISC LRFD UNIFORM LOAD TABLES FOR BEAMS FOR APPLICABLE BEAM MATERIAL MULTIPLIED BY 2.0.
   b) FOR NON-COMPOSITE BEAMS, REACTION FROM AISC LRFD UNIFORM LOAD TABLES FOR BEAMS FOR APPLICABLE BEAM MATERIAL MULTIPLIED BY 1.3
   c) MINIMUM NUMBER OF BOLT ROWS AND MINIMUM CONNECTION CAPACITY, SEE TABLE.
   d) CONNECTIONS OF BEAMS SHORTER THAN 10'-0" SHALL BE DESIGNED FOR MIN. REACTION IN TABLE B, U.O.N. ON DWGS.
2. IN ADDITION TO THE VERTICAL SHEAR BEAM TO BEAM END CONNECTIONS SHALL BE DESIGNED FOR THE MOST CRITICAL OF THE FOLLOWING:
   a) AXIAL LOAD SHOWN ON DRAWINGS (±P) CONCOMITANT WITH THE VERTICAL SHEAR.
   b) A DESIGN TENSION STRENGTH EQUAL TO THE LARGER OF THE PROVIDED SHEAR LOAD AT EITHER END BUT NOT LESS THAN 15* (LRFD), U.O.N. THE CONNECTION DESIGN FOR THIS REQUIREMENT SHALL BE IN ACCORDANCE WITH THE PROVISIONS OF N.Y. CITY BUILDING CODE SECTIONS BC 2213.2 ITEM 3.
3. IN ADDITION TO THE VERTICAL SHEAR BEAM TO COLUMNS END CONNECTION SHALL BE DESIGNED FOR THE MOST CRITICAL OF THE FOLLOWING:
   a) AXIAL LOAD SHOWN ON DRAWINGS (±P) CONCOMITANT WITH THE VERTICAL SHEAR.
   b) A DESIGN TENSION STRENGTH EQUAL TO THE LARGER OF THE PROVIDED SHEAR LOAD AT EITHER END BUT NOT LESS THAN 15* (LRFD), U.O.N. THE CONNECTION DESIGN FOR THIS REQUIREMENT SHALL BE IN ACCORDANCE WITH THE PROVISIONS OF N.Y. CITY BUILDING CODE SECTIONS BC 2213.2 ITEM 3.
4. BOLT TYPE SHALL BE ASTM A 325 (CONTRACTOR MAY USE A490 BOLTS AT HIS OPTION, SUBJECT TO MINIMUM NUMBER OF BOLTS REQUIREMENT).
5. ALL BOLTS SHALL BE FULLY PRETENSIONED.
6. PROVIDE WEB REINFORCING AS REQUIRED DUE TO WEB CUTS, COPES, ETC.
7. DESIGN OF DOUBLE ANGLE AND SHEAR PLATE CONNECTIONS SHALL BE BASED UPON THE LATEST AISC PROCEDURES SHOWN IN THE AISC MANUAL OF STEEL CONSTRUCTION.

TABLE A
MINIMUM NUMBER OF BOLTS FOR SIMPLE SHEAR CONN.

BEAM SIZE	"N"
W8	2
W10	2
W12	3
W14	3
W16	3
W18	4
W21	4
W24	4
W27	5
W30	5
W33	6
W36	6
W40	7
W44	7

TABLE B
MINIMUM CONN. FACTORED LOAD

BEAM SIZE	FACTORED LOAD (K)
W6	15
W8	20
W10	25
W12	25
W14	40
W16	45
W18	45
W21	55
W24	55
W27	65
W30	65
W33	80
W36	80
W40	90
W44	90

TABLE C
MINIMUM FILLET WELDS SIZE

THICKER PART JOINED	MINIMUM FILLET WELD
UP TO 3/4"	1/4"
OVER 3/4"	5/16"

"N" = MINIMUM NUMBER OF BOLTS REQUIRED PER CONNECTION. THE TABULATED MINIMUM NUMBER OF BOLTS WILL GENERALLY BE EXCEEDED BY OTHER DESIGN CRITERIA.

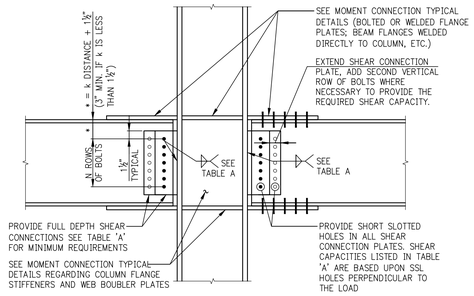

L.L.R.S. SHEAR CONNECTION TO COLUMN FLANGE

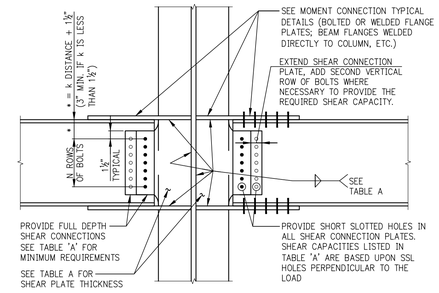

L.L.R.S. SHEAR CONNECTION TO COLUMN WEB

TABLE A
SHEAR CONNECTION REQUIREMENTS FOR TYPE 'A' MOMENT CONNECTIONS

– PROVIDE FULL DEPTH SINGLE SHEAR PLATE.
– PROVIDE MINIMUM WELD SIZE TABULATED.
– BOLTS TO BE MINIMUM ⅞" DIAMETER, A325(SC).
– PROVIDE 1⅛" DIAMETER A490(SC) BOLTS WHERE ACTUAL GIRDER SHEAR EXCEEDS TABULATED CAPACITY.

WIND GIRDER DEPTH	NUMBER OF HORIZONTAL ROWS OF BOLTS "N"	MINIMUM SHEAR PLATE THICKNESS Fy=50	MINIMUM SHEAR PLATE THICKNESS Fy=36	MINIMUM FILLET WELD SIZE (E70XX)	CONNECTION SHEAR CAPACITY (LRFD – KIPS) ⅞"ø A325
W12, W14	3	½	⅝	5/16	33
W16	4	½	⅝	5/16	44
W18	5	½	⅝	5/16	56
W21	6	½	⅝	5/16	67
W24	6	½	⅝	5/16	67
W27	7	½	⅝	5/16	78
W30	8	½	⅝	5/16	89
W33	9	½	⅝	5/16	100
W36	10	½	⅝	5/16	111
W40	11	½	⅝	5/16	122
W44	12	½	⅝	5/16	133

L. L. R. S. TYPE 'A' SHEAR CONNECTIONS

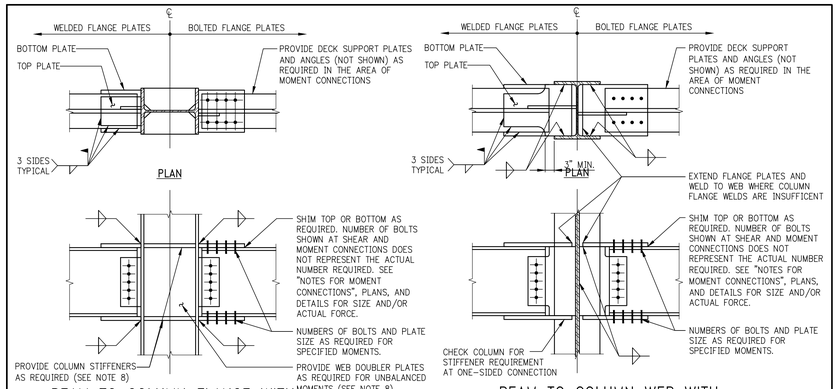

BEAM TO COLUMN FLANGE WITH BOLTED OR WELDED FLANGE PLATES

BEAM TO COLUMN WEB WITH BOLTED OR WELDED FLANGE PLATES

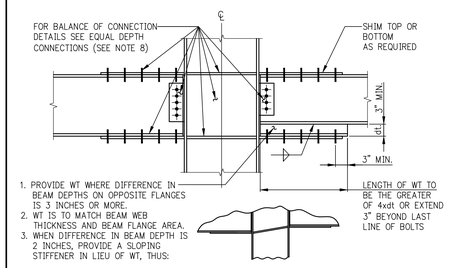

BEAM TO COLUMN FLANGE WITH DIFFERENT BEAM DEPTHS
(BEAM TO COLUMN WEB SIMILAR SEE EQUAL DEPTH CONNECTIONS)

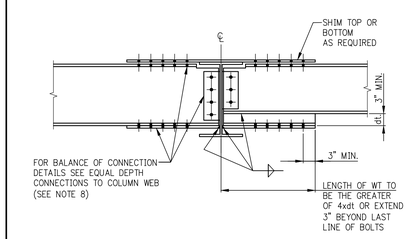

BEAM TO BEAM WITH DIFFERENT DEPTHS

TERMINOLOGY AND LEGEND FOR L.L.R.S. FRAMES

1. "L.L.R.S." MEANS "LATERAL LOAD RESISTING SYSTEM" (USUALLY THIS NOMENCLATURE DOES NOT APPEAR ON FRAMES OR ON INDIVIDUAL MEMBERS).
2. "W.F." IS A WIND/SEISMIC LATERAL LOAD RESISTING FRAME ON THE STRUCTURE'S PERIMETER, INTERIOR, OR CORE. (COLUMNS, GIRDERS, BEAMS, TRUSSES, BRACES, ETC.).
3. "W.G." IS A WIND/SEISMIC GIRDER: AN INDIVIDUAL MEMBER, COMPONENT OF A WIND/SEISMIC L.L.R.S.
4. ——— = A MOMENT CONNECTION, TYPE A OR TYPE B.
   OR:
5. MC — MC = A MOMENT CONNECTION, TYPE A OR TYPE B.
6. TYPE A MOMENT CONNECTION:
   PART OF A LATERAL LOAD RESISTING SYSTEM, THIS CONNECTION HAS THE MOST STRINGENT REQUIREMENTS – IT MUST DEVELOP THE FULL MOMENT CAPACITY OF THE GIRDER AND PROVIDE THE GREATER SHEAR CAPACITY REQUIRED TO RESIST SHEAR FORCES GENERATED BY COMBINED GRAVITY PLUS LATERAL LOADS. (SEE TYPE A SHEAR CONNECTION DETAILS).
7. TYPE B MOMENT CONNECTION:
   ALL OTHERS, SUCH AS: CANTILEVERS, STIFFENING OF MEMBERS TO REDUCE DEFLECTIONS, ETC. A DESIGN MOMENT LESS THAN FULL MOMENT CAPACITY MAY BE INDICATED ON THE FRAMING PLANS, IN WHICH CASE THE CONNECTION MAY BE DESIGNED FOR THIS VALUE. IF NO MOMENT IS GIVEN, THE CONNECTION MUST BE DESIGNED FOR FULL MOMENT CAPACITY. (SEE SIMPLE SHEAR CONNECTION DETAILS).

NOTES FOR MOMENT CONNECTIONS

1. •CONNECTIONS FOR ALL MEMBERS DESIGNATED AS PART OF A LATERAL LOAD RESISTING SYSTEM (W.F OR W.G.)SHALL BE TYPE A MOMENT CONNECTIONS (SEE LEGEND FOR DEFINITION AND REQUIREMENTS).
2. • SHEAR CONNECTIONS SHALL CONFORM TO "TABLE A –– SHEAR CONNECTION REQUIREMENTS FOR TYPE A MOMENT CONNECTIONS".
3. ALL OTHER SHEAR CONNECTIONS (INCLUDING THOSE AT TYPE B MOMENT CONNECTIONS) SHALL CONFORM TO "SIMPLE SHEAR CONNECTION DETAILS".
4. WELDS AND BOLTS FOR MOMENT CONNECTIONS SHALL DEVELOP THE FULL MEMBER MOMENT CAPACITY, EXCEPT AT A TYPE B CONNECTION WHERE A LESSER MOMENT VALUE IS INDICATED ON THE FRAMING PLANS. (THIS MAY ONLY BE UTILIZED AT A TYPE B CONNECTION).
5. MOMENT CONNECTION PLATES SHALL BE SIZED AS REQUIRED FOR THE SPECIFIED MOMENT.
6. WELD SMAY BE SUBSTITUTED FOR BOLTS UPON PRIOR APPROVAL OF THE STRUCTURAL ENGINEER.
7. PROVIDE WEB AND/OR FLANGE REINFORCING WHERE REQUIRED DUE TO WEB CUTS OR COPES FOR CONNECTIONS.
8. PER THE PROVISIONS OF CHAPTER J OF THE AISC SPECIFICATIONS, PROVIDE COLUMN FLANGE STIFFENERS WHERE REQUIRED TO RESIST FORCES FROM MOMENT CONNECTIONS. PROVIDE COLUMN WEB DOUBLER PLATES AS REQUIRED FOR UNBALANCED MOMENT. (AT CONTRACTOR'S OPTION A HEAVIER COLUMN MAY BE SUBSTITUTED IN LIEU OF DOUBLER/STIFFENER PLATES, AT NO COST TO THE OWNER.
9. SLIP-CRITICAL BOLTS USED IN ALL MOMENT CONNECTIONS SHALL HAVE A MINIMUM DIAMETER OF 7/8" AND SHALL BE BASED UPON BOLT VALUES GIVEN IN TABLE 7-4, "SLIP-CRITICAL CONNECTIONS", WHERE "SLIP IS A STRENGTH LIMIT-STATE", CLASS A PAYING SURFACE (13TH EDITION OF AISC MANUAL).
10. IF THE FABRICATOR PROPOSES TO USE CLASS B PAYING SURFACE AND GREATER BOLT CAPACITY THAN TABLE 7-4 VALUES, HE MUST SUBMIT HIS PROPOSED DESIGN AND FABRICATION PROCEDURES TO THE ENGINEER FOR PRIOR APPROVAL.
11. •PROVIDE A MINIMUM OF 3/4 INCH DIAMETER SHEAR STUDS AT 12 INCHES ON CENTER ALONG THE FULL LENGTH OF THE TOP FLANGE OF ALL W.F./W.G. MEMBERS. IF FRAMING PLANS CALL FOR A NUMBER OF STUDS GREATER THAN ONE PER FOOT OF LENGTH, PROVIDE THE GREATER NUMBER. •THESE NOTES (NUMBERS 1,2, AND 11) APPLY TO L.L.R.S. FRAMES. BALANCE OF NOTES APPLY TO ALL MOMENT CONNECTIONS, BOTH TYPE A AND TYPE B.

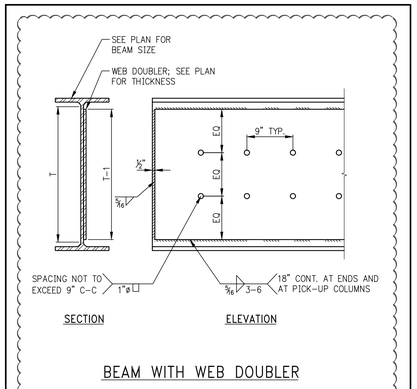

BEAM WITH WEB DOUBLER

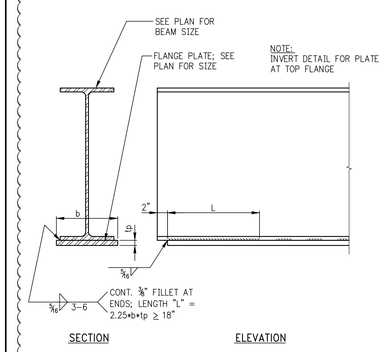

BEAM WITH FLANGE PLATE

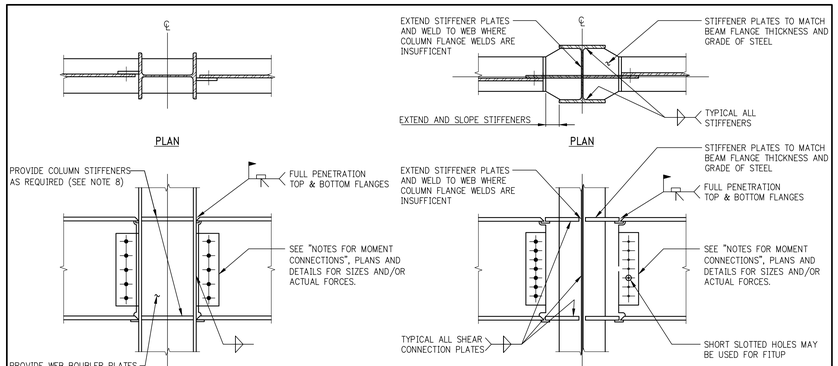

BEAM FLANGES WELDED DIRECTLY TO COLUMN FLANGES

BEAM FLANGES WELDED DIRECTLY TO COLUMN WEB STIFFENERS

KEY PLAN:

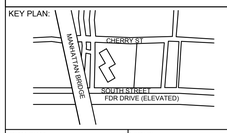

PROJECT NORTH | TRUE NORTH

DEVELOPER:
EXTELL DEVELOPMENT COMPANY
805 Third Ave, 7th Floor
New York, NY 10022
TEL: 212-712-6000 FAX: 212-712-6100

ARCHITECT OF RECORD:
AAI ARCHITECTS, P.C.
14 Wall Street, 2nd Floor
New York, NY 10005
TEL: 212-964-4040 FAX: 212-964-4090

INTERIOR DESIGNER:
MEYER DAVIS
180 Varick St, suite 404
New York, NY 10014
TEL: 212-627-5574

LANDSCAPE DESIGNER:
WEST 8 URBAN DESIGN & LANDSCAPE ARCHITECTURE P.C.
333 Hudson Street, Suite 905
New York, NY 10013
TEL: 212-285-0088 FAX: 212-285-0228

STRUCTURAL ENGINEERS:
WSP
228 East 45th Street
New York, NY 10017
TEL: 212-687-9888 FAX: 646-487-5501

MEP ENGINEERS:
ICOR ASSOCIATES, LLC
485 C Route 1 South, Suite 200
Iseline, NJ 08830
TEL: 908-272-3300 FAX: 908-272-4440

GEOTECHNICAL ENGINEERS:
LANGAN ENGINEERING & ENVIRONMENTAL SERVICES
21 Penn Plaza - 360 West 31st Street, 8th Floor
New York, NY 10001
TEL: 212.479.5400 FAX: 212.479.5444

No.	DESCRIPTION:	DATE:
	50% DD	08-01-14
	DESIGN DEVELOPMENT	10-07-14
	STEEL BID PACKAGE	02-24-15
	CONCRETE BID PACKAGE	03-06-15
	ADDENDUM #3	03-27-15
	ISSUED FOR FILING	07-28-15
	ADDENDUM #14	10-22-15
	ISSUE FOR CONSTRUCTION	03-18-16
	ISSUED FOR FILING	05-22-17

Discrepancies must be reported immediately to the Architect before proceeding. Only figured dimensions are to be used. Contractors must check all dimensions on site. This drawing is protected by copyright.

ALL DIMENSIONS ARE SHOWN IN IMPERIAL.

CONSULTANT: WSP

PROJECT:
252 SOUTH STREET
NEW YORK, NY

DRAWING TITLE:
TYPICAL STEEL SUPERSTRUCTURE DETAILS 1

SEAL & SIGNATURE: STATE OF NEW YORK · HOWARD RANKOWITZ · No. 085552 · LICENSED PROFESSIONAL ENGINEER

DATE:	07/25/14	
PROJECT No:	1302510	
DRAWN:	CADD	REV:
CHK:	CL	
SCALE:	N.T.S.	
DWG No:	**S-960.02**	
DOB PAGE No:	of	

DOB EMPLOYEE STAMP: Tina Mathew, RA — APPROVED Under Directive 2 of 1975 AMENDED APPLICATION Date: 10/23/2017 NYC Development Hub

DOB B-SCAN:

FILE NAME:
PLOT DATE:

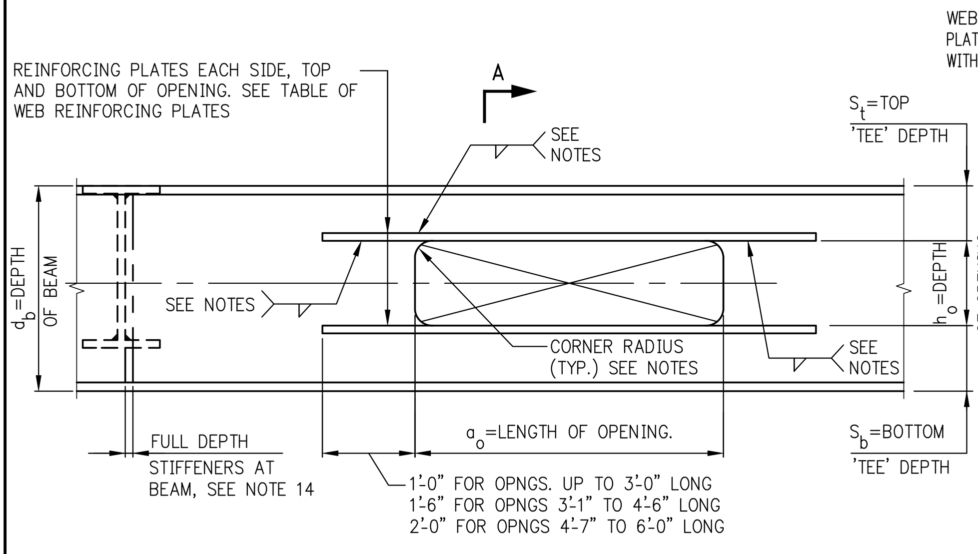

BEAM WEB OPENINGS

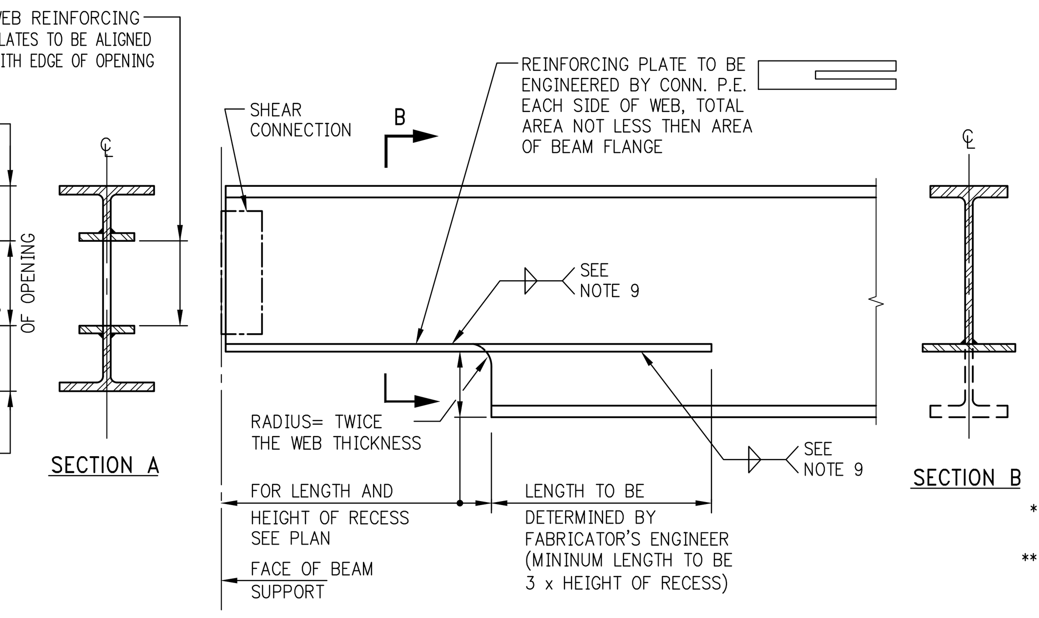

RECESS IN BEAM SOFFIT AT SUPPORT

TABLE OF MINIMUM WEB REINFORCING PLATES		
PL SIZE- EACH SIDE OF WEB (in x in)	Ar PROVIDED (2 PL'S) (in^2)	RANGE OF BEAM WEIGHTS FOR USE OF PL'S
3/8 x 1 1/2	1.13	UP TO 22 #/F
3/8 x 2	1.50	23 THRU 30 #/F
1/2 x 2	2.00	31 THRU 40 #/F
1/2 x 2 1/2	2.50	41 THRU 50 #/F
1/2 x 3	3.00	51 THRU 60 #/F
5/8 x 3	3.75	61 THRU 75 #/F
3/4 x 3	4.50	76 THRU 90 #/F
7/8 x 3	5.25	91 THRU 105 #/F
1 x 3	6.00	106 THRU 120 #/F
*1 x 3 1/2	7.00	121 THRU 140 #/F
*1 x 4	8.00	141 THRU 160 #/F
**	**	OVER 160 #/F

* PLATE EXTENSIONS BEYOND WEB OPENING SHALL BE INCREASED BY 33% OVER THOSE SHOWN ON TYPICAL DETAILS.

** PROVIDE SUITABLE PLATE SIZES SUCH THAT COMBINED AREA OF TWO PLATES IS EQUAL IN AREA TO AT LEAST 50% OF FLANGE AREA OF BEAM BEING REINFORCED, UNLESS SPECIFIC REINFORCING PLATE DETAILS ARE SHOWN ON THE DRAWINGS. PLATE EXTENSIONS BEYOND WEB OPENING SHALL BE INCREASED BY 33% OVER THOSE SHOWN ON TYPICAL DETAIL.

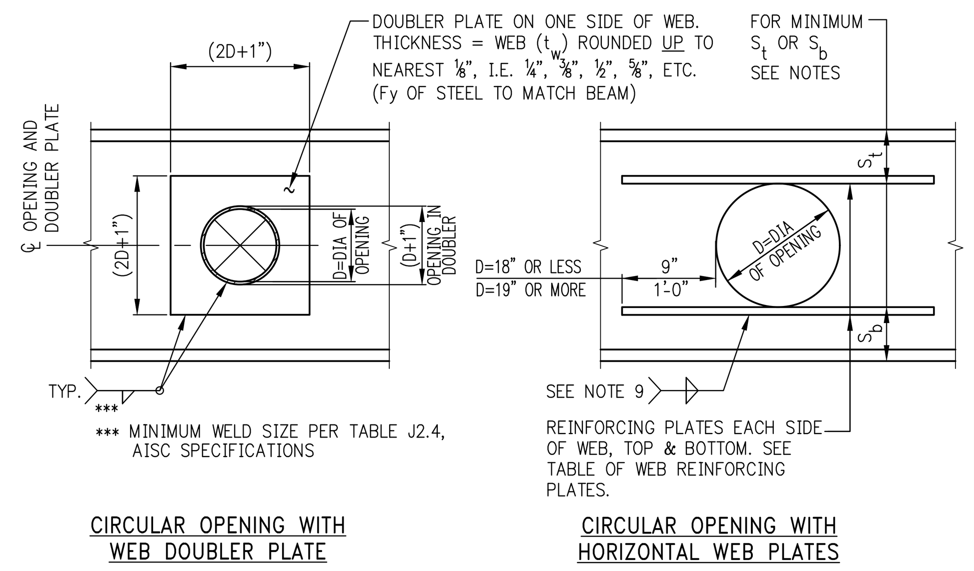

BEAM WEB CIRCULAR OPENINGS

CIRCULAR OPENINGS- MAXIMUM DIAMETERS OF UNREINFORCED AND REINFORCED OPENINGS			
BEAM SIZE	MAX. HOLE DIA.: UNREINFORCED	MAX. HOLE DIA.: WEB DOUBLER	MAX. HOLE DIA.: HORIZ. WEB PL'S
W12 (40 #/F & UP)	3.0"	4.25"	6.0"
(35 #/F & LESS)	3.0"	4.75"	6.0"
W14 (43 #/F & UP)	3.5"	5.0"	7.0"
(38 #/F & LESS)	3.5"	5.5"	7.0"
W16	4.0"	6.25"	9.0"
W18	4.5"	7.25"	11.0"
W21	5.0"	8.5"	12.5"
W24	6.0"	10.0"	14.5"
W27	6.5"	11.0"	16.0"
W30	7.5"	13.0"	18.0"
W33	8.0"	14.5"	20.0"
W36	9.0"	15.5"	21.5"
W40	10.0"	16.5"	24.0"
W44	11.0"	18.5"	26.0"

TYPICAL BEAM WEB OPENING NOTES:

1. THE GRADE OF STEEL (Fy) OF ALL REINFORCING PLATES AND WEB DOUBLERS SHALL BE EQUAL TO THE GRADE OF STEEL (Fy) OF THE BEAM BEING REINFORCED.
2. USE THESE DETAILS TO REINFORCE ALL WEB OPENINGS UNLESS OTHER SPECIFIC REINFORCING PLATES ARE CALLED FOR ON THE DRAWINGS.
3. SOME SMALL WEB PENETRATIONS MAY NOT REQUIRE WEB REINFORCING. REINFORCING MAY BE OMITTED ONLY WHEN SPECIFIC DIRECTION IS GIVEN ON THE FRAMING PLAN THAT WEB REINFORCING IS NOT REQUIRED.
4. MAXIMUM h_0 = 0.60 d_b FOR W18 AND DEEPER
   = 0.563 d_b FOR W16 (9" OPENING)
   = 0.50 d_b FOR W12 & W14
   (THIS DETAIL DOES NOT APPLY TO BEAMS SHALLOWER THAN 12")
5. MINIMUM S_t OR S_b = 0.20 d_b FOR W18 AND DEEPER
   = 3.5" FOR W16
   = 0.25 d_b FOR W12 & W14.
6. THE MAXIMUMS AND MINIMUMS SHOWN IN NOTES 4 AND 5 DO NOT HAVE TO OCCUR SIMULTANEOUSLY – A SHALLOWER DEPTH OPENING MAY BE SHIFTED UP OR DOWN FROM MID – DEPTH, RESULTING IN A MINIMUM S_t OR S_b.
7. MAXIMUM LENGTH OF OPENING (a_o) IS DEPENDENT UPON S_t OR S_b: $a_o \leq 8xS_t$ OR $8xS_b$, WHICHEVER IS SMALLER. MAXIMUM LENGTH OF OPENING SHALL NOT EXCEED 6'-0" REGARDLESS OF BEAM SIZE AND/OR OPENING DEPTH.
8. THE WELD WITHIN THE LENGTH OF THE OPENING SHALL RESIST TWICE THE YIELD STRENGTH ($\phi F_y A_r$) OF THE WEB REINFORCING PLATE, UNLESS OTHERWISE NOTED.
9. THE WELDS IN EACH EXTENSION OF THE WEB REINFORCING PLATE BEYOND THE ENDS OF THE OPENING SHALL DEVELOP THE YIELD STRENGTH OF THE WEB REINFORCING PLATE. MINIMUM WELD SIZE PER TABLE J2.4, AISC SPECIFICATIONS.
10. CORNER RADII SHALL NOT BE LESS THAN TWICE THE THICKNESS OF THE BEAM WEB.
11. THE NEAREST EDGE OF ANY WEB OPENING SHALL BE AT LEAST A DISTANCE d_b FROM A BEAM SUPPORT.
12. TWO ADJACENT WEB OPENINGS SHALL BE SEPARATED BY A MINIMUM DISTANCE BETWEEN EDGES OF OPENINGS EQUAL TO THE LARGER OF THE TWO WEB OPENING LENGTHS.
13. NO CONCENTRATED LOAD SHALL BE LOCATED WITHIN THE LENGTH OF THE WEB OPENING.
14. NO BEAM SHALL BE FRAMED INTO THE BEAM CONTAINING THE WEB OPENING WITHIN A DISTANCE OF $d_b/2$ FROM THE EDGE OF THE OPENING. ANY BEAM LOCATED BETWEEN A DISTANCE OF $d_b/2$ AND d_b FROM THE EDGE OF AN OPENING SHALL BE FRAMED TO FULL DEPTH STIFFENERS ON EACH SIDE OF THE WEB.
15. NO BEAM PENETRATIONS WILL BE ALLOWED UNLESS SIZE AND LOCATION ARE SHOWN ON PLAN.

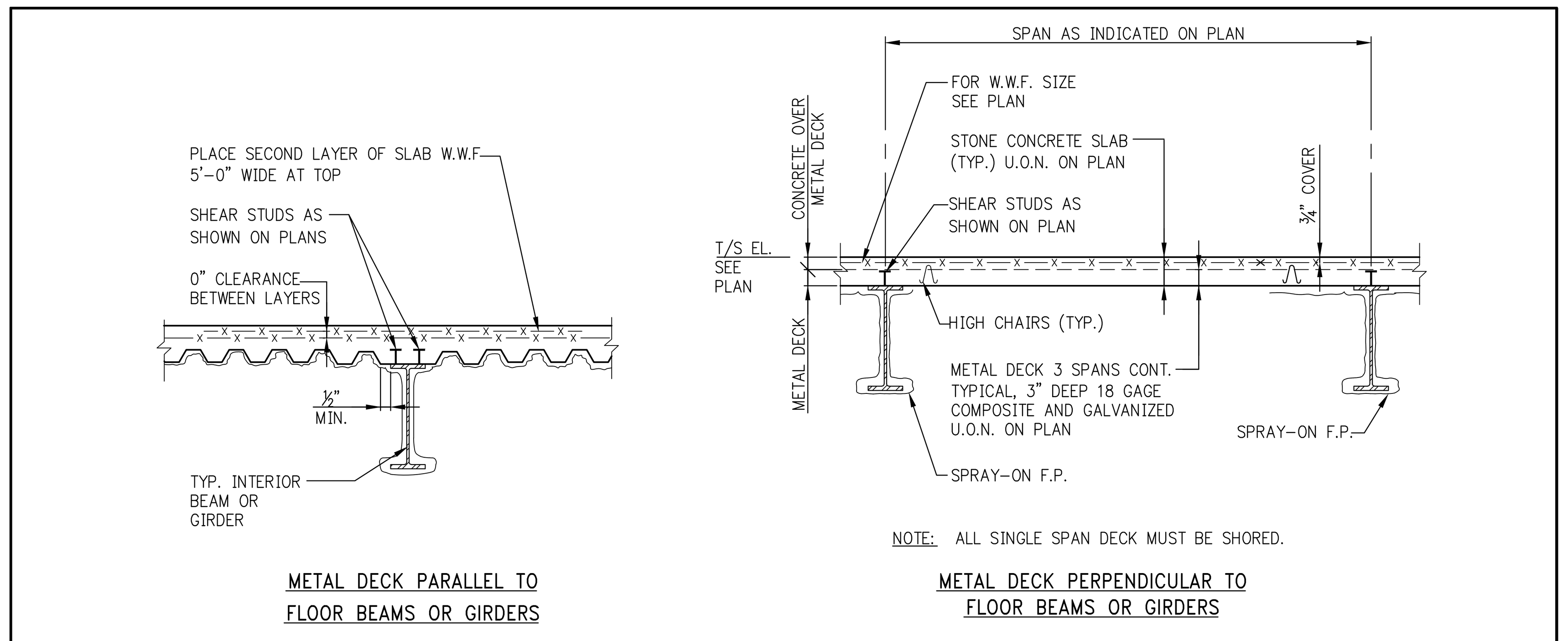

TYPICAL FLOOR CONSTRUCTION

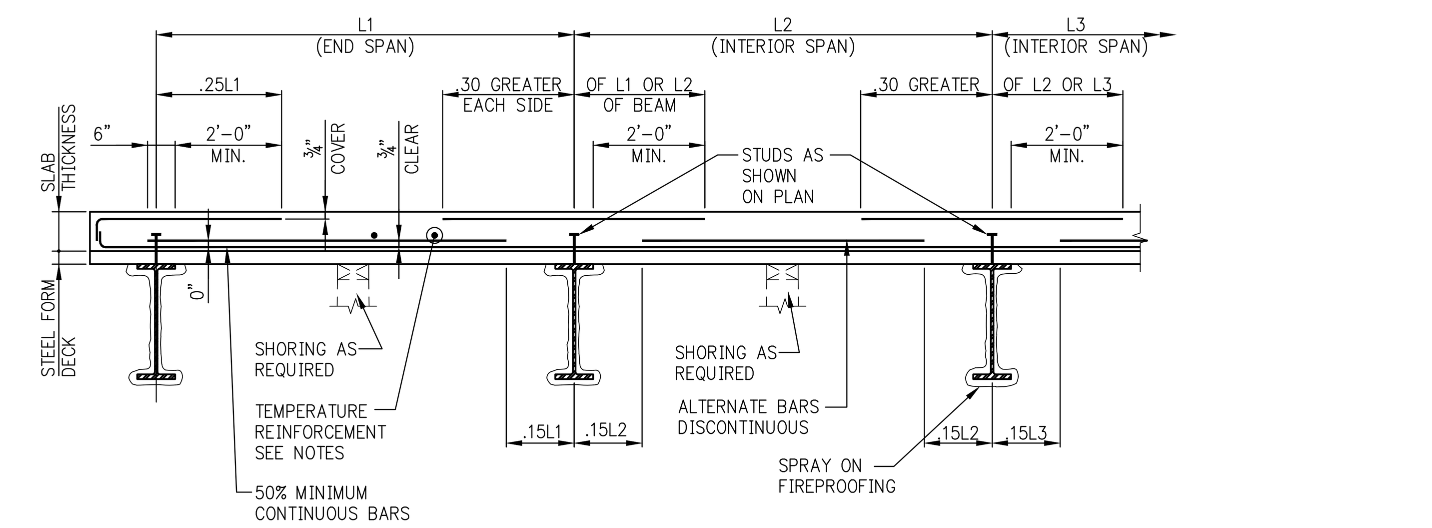

CONCRETE SLAB REINFORCEMENT DETAILS ON STEEL FORM DECK

NOTES:

1. FOR STEEL FORM DECK TYPE, DEPTH, GAGE, YIELD STRESS, PROTECTIVE COATING, ETC. SEE FRAMING PLANS AND NOTES.
2. THESE DETAILS ARE APPLICABLE TO REINFORCED CONCRETE SLAB PLACED ON STEEL FORM DECK SEE PLANS FOR LOCATIONS.
3. SLAB REINFORCEMENT INTERRUPTED BY AN OPENING IN THE SLAB SHALL BE COMPENSATED FOR BY PLACING ONE HALF OF THE REINFORCEMENT TERMINATED ON EACH SIDE OF THE OPENING. REINFORCEMENT SHALL EXTEND FOR FULL LENGTH OF SPAN.
4. PROVIDE 2–#4 TOP AND BOTTOM ADDITIONAL BARS AT ALL FOUR SIDES OF ALL SLAB OPENINGS. LENGTH OF BARS TO BE EQUAL TO OPENING PLUS FIVE FEET.
5. PROVIDE #4@12 TOP REINFORCEMENT OVER ALL STEEL FRAMING MEMBERS (GIRDERS) WHICH ARE PARALLEL TO THE SPAN DIRECTION OF THE SLAB. BARS TO EXTEND 2'–0" FROM EDGE OF GIRDER FLANGE ON EACH SIDE OF GIRDER.
6. HOOK ALL TOP BARS AT DISCONTINUOUS ENDS, I.E. FACE OF CANTILEVERS, EDGE OF SLAB, OPENINGS, ETC.
7. SLAB TEMPERATURE REINFORCEMENT SHALL BE #4@18 FOR SLAB THICKNESS UP TO 6", #4@12 FOR SLAB THICKNESS BETWEEN 6"+ AND 9", #4@9" BETWEEN 9"+ AND 12".

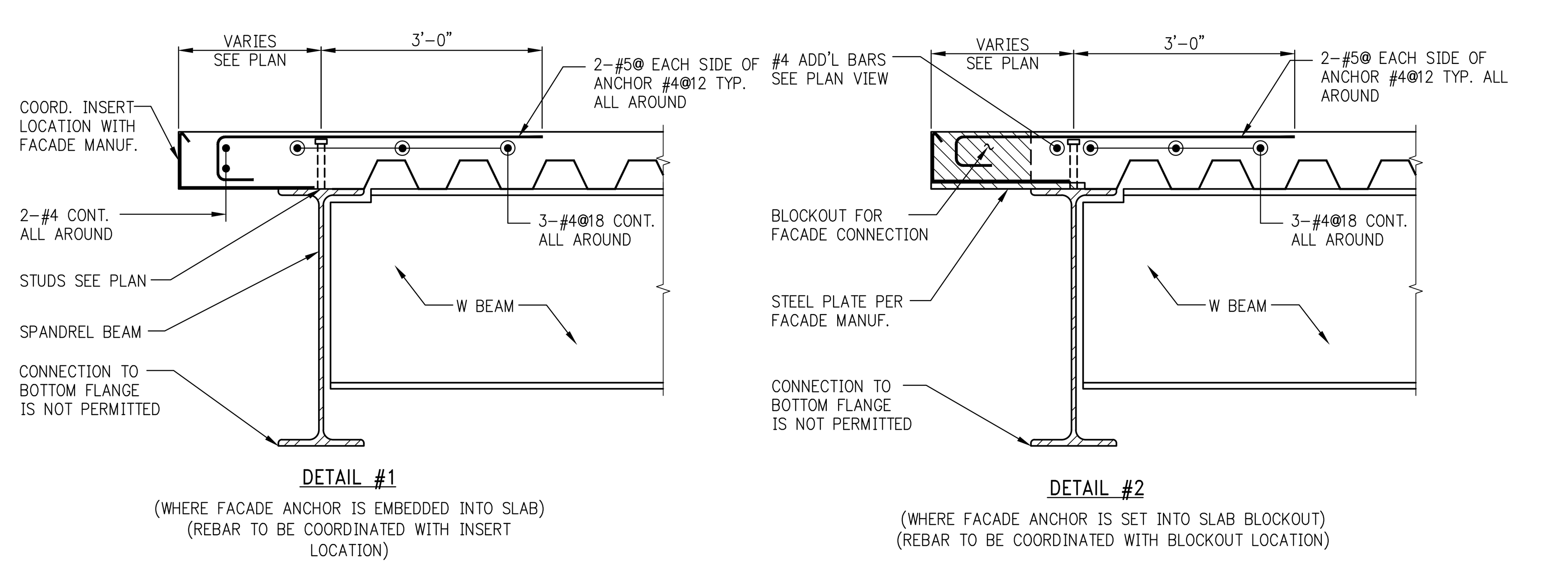

DECK SUPPORT AT PERIMETER

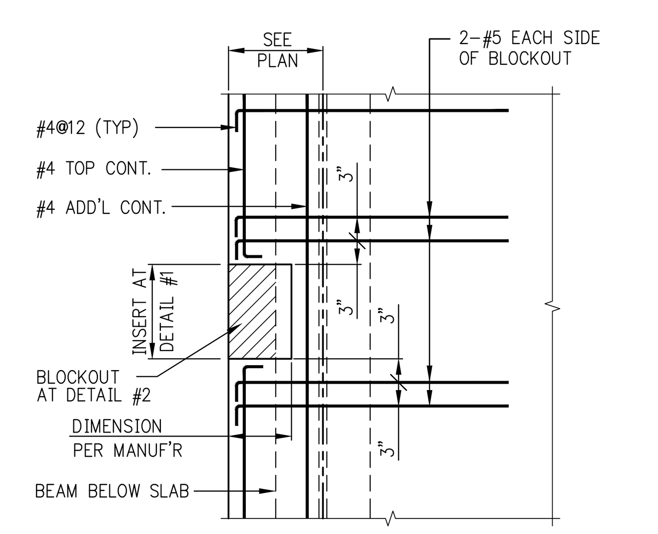

PLAN VIEW AT FACADE ANCHORS

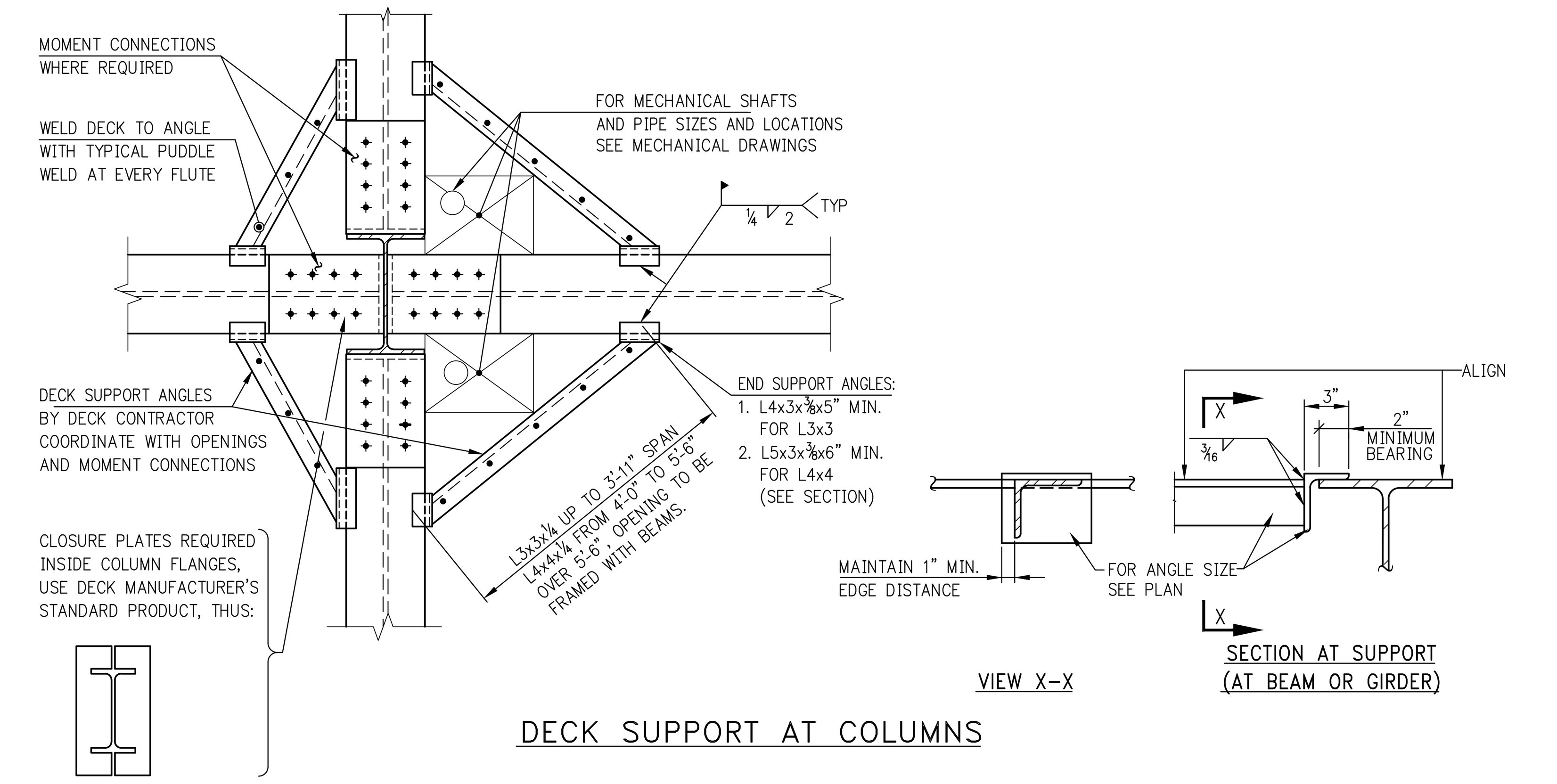

DECK SUPPORT AT COLUMNS

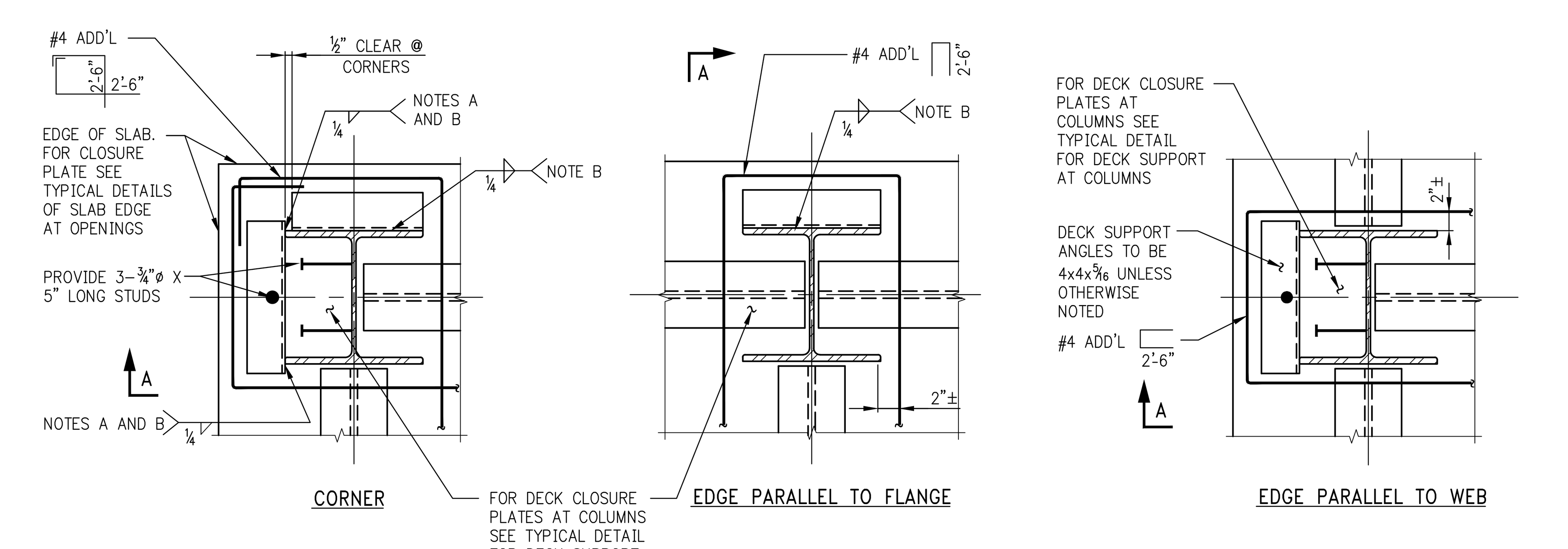

NOTE A:
RETURN WELD AT TOP FOR A DISTANCE EQUAL TO FLANGE THICKNESS

NOTE B:
USE 5/16" WELD AT COLUMN FLANGE OVER 3/4" THICK

DECK SUPPORT AT PERIMETER COLUMNS

NOTE:
DECK IS NOT SHOWN. SEE FRAMING PLANS FOR SIZE AND DIRECTION OF SPAN.

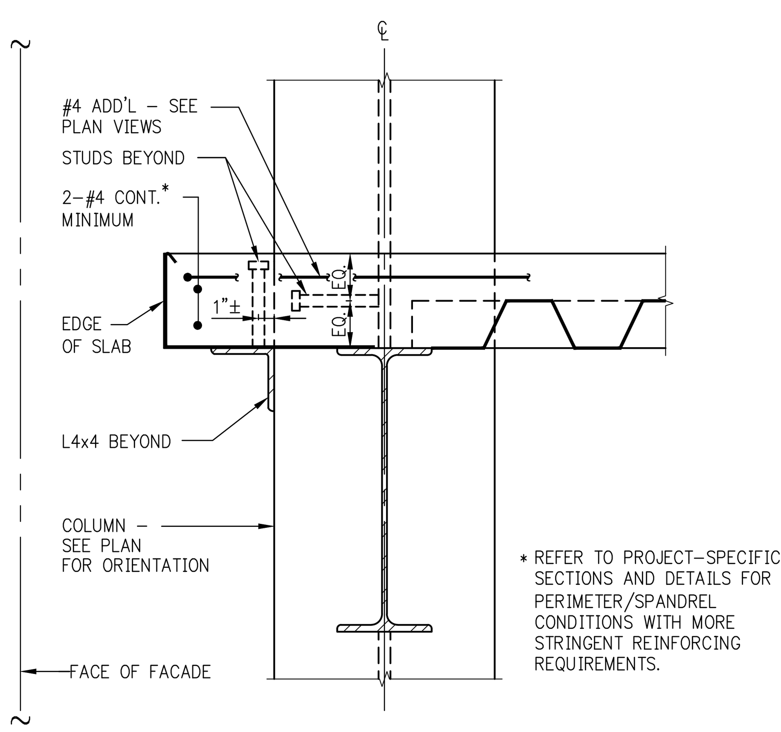

SECTION A

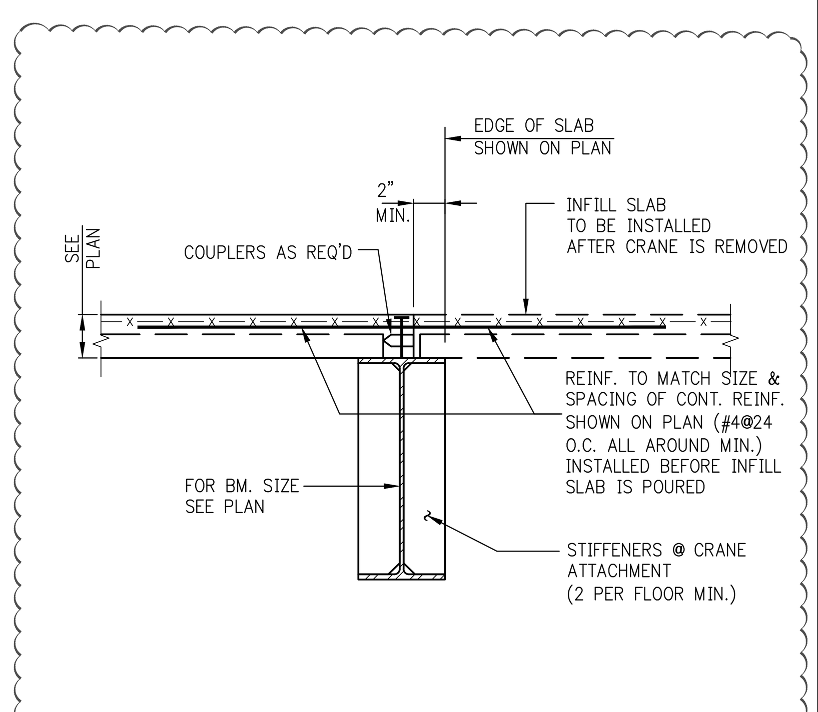

TYPICAL DETAIL AT TOWER CRANE OPENING/ TEMPORARY OPENING

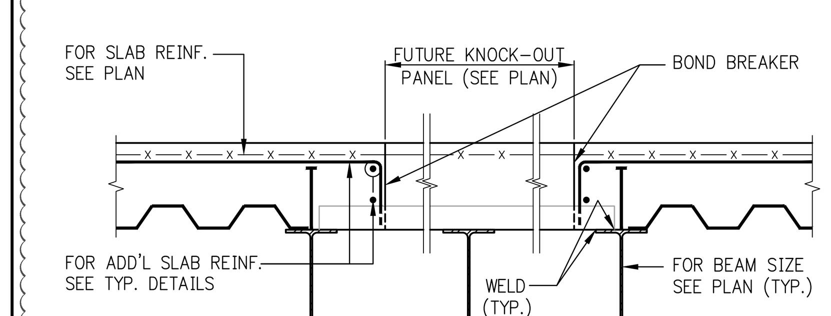

TYPICAL KNOCK OUT SLAB DETAIL

KEY PLAN:

PROJECT NORTH | TRUE NORTH

DEVELOPER:
EXTELL DEVELOPMENT COMPANY
805 Third Ave, 7th Floor
New York, NY 10022
TEL:212-712-6000 FAX: 212-712-6100

ARCHITECT OF RECORD:
AAI ARCHITECTS, P.C.
14 Wall Street, 2nd Floor
New York, NY 10005
TEL: 212-964-4040 FAX: 212-964-4090

INTERIOR DESIGNER:
MEYER DAVIS
180 Varick St, suite 404
New York, NY 10014
TEL: 212-627-5574

LANDSCAPE DESIGNER:
WEST 8 URBAN DESIGN & LANDSCAPE ARCHITECTURE P.C.
333 Hudson Street, Suite 905
New York, NY 10013
TEL: 212-285-0088 FAX: 212-285-0228

STRUCTURAL ENGINEERS:
WSP
228 East 45th Street
New York, NY 10017
TEL: 212-687-9888 FAX: 646-487-5501

MEP ENGINEERS:
ICOR ASSOCIATES, LLC
485 C Route 1 South, Suite 200
Iseline, NJ 08830
TEL: 908-272-3300 FAX: 908-272-4440

GEOTECHNICAL ENGINEERS:
LANGAN ENGINEERING & ENVIRONMENTAL SERVICES
21 Penn Plaza - 360 West 31st Street, 8th Floor
New York, NY 10001
TEL: 212.479.5400 FAX: 212.479.5444

No.	DESCRIPTION:	DATE:
	50% DD	08-01-14
	DESIGN DEVELOPMENT	10-07-14
	STEEL BID PACKAGE	02-24-15
	CONCRETE BID PACKAGE	03-06-15
	ADDENDUM #3	03-27-15
	ISSUED FOR FILING	07-28-15
	PRELIMINARY PRICING SET	09-21-15
	ISSUE FOR CONSTRUCTION	03-18-16
	ISSUED FOR FILING	05-22-17

Discrepancies must be reported immediately to the Architect before proceeding. Only figured dimensions are to be used. Contractors must check all dimensions on site. This drawing is protected by copyright.

ALL DIMENSIONS ARE SHOWN IN IMPERIAL.

CONSULTANT: WSP

PROJECT:
252 SOUTH STREET
NEW YORK, NY

DRAWING TITLE:
TYPICAL STEEL SUPERSTRUCTURE DETAILS 2

SEAL & SIGNATURE:

DATE:	07/25/14
PROJECT No:	1302510
DRAWN: CADD	REV:
CHK: CL	
SCALE: N.T.S.	
DWG No:	S-961.02
DOB PAGE No: of	

DOB EMPLOYEE STAMP: | DOB B-SCAN:

Tina Mathew, RA
APPROVED
Under Directive 2 of 1975
AMENDED APPLICATION
Date: 10/23/2017
NYC Development Hub

DEPT OF BLDGS 121185528 Job Number
ES579013814 Scan Code
30" x 42" Arch E1 - SHEET SIZE

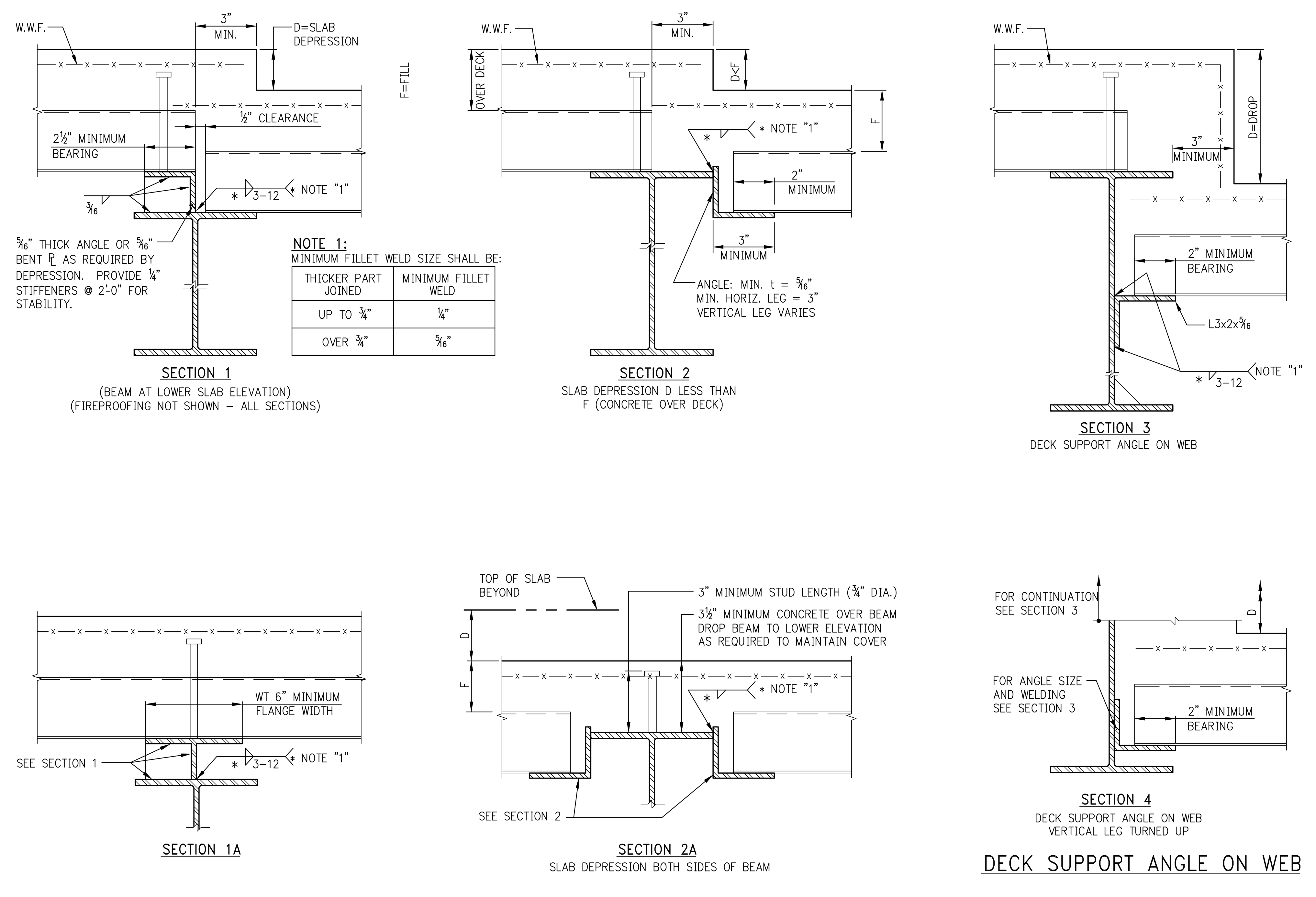

NOTE 1:
MINIMUM FILLET WELD SIZE SHALL BE:

THICKER PART JOINED	MINIMUM FILLET WELD
UP TO ¾"	¼"
OVER ¾"	5/16"

DECK SUPPORT ANGLE ON WEB

SLAB DEPRESSIONS ON STEEL DECK

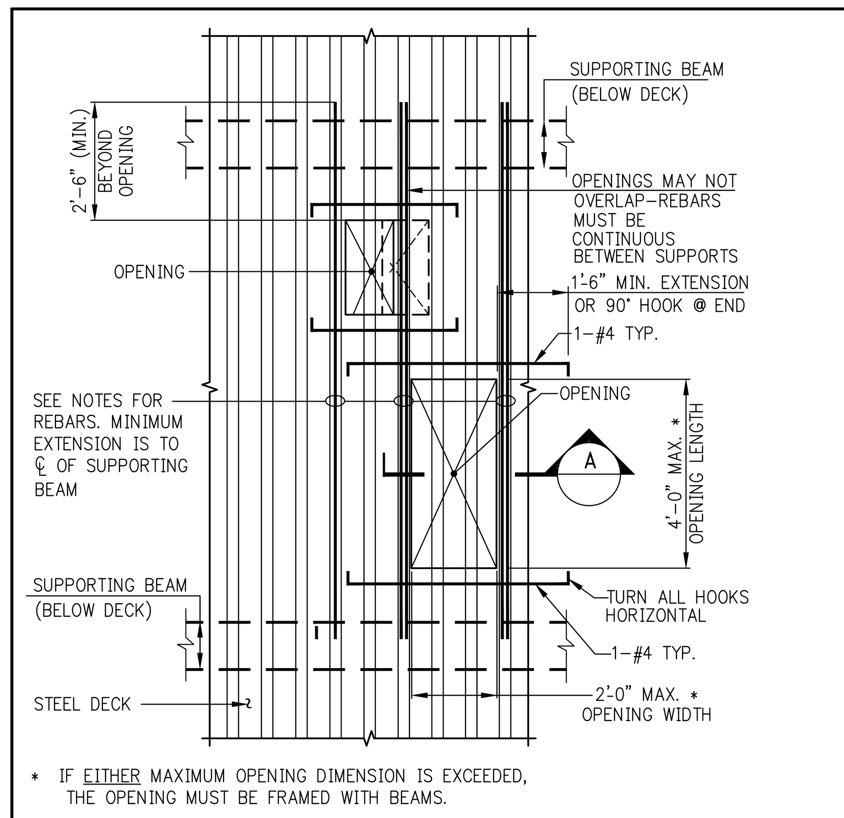

* IF EITHER MAXIMUM OPENING DIMENSION IS EXCEEDED, THE OPENING MUST BE FRAMED WITH BEAMS.

NOTES:

1. OPENINGS WHICH ARE DETERMINED BY THE CONTRACTOR TO BE REQUIRED BY JOB CONDITIONS, BUT WHICH ARE NOT SHOWN ON THE STRUCTURAL DRAWINGS, SHALL BE SUBMITTED TO THE ARCHITECT AND STRUCTURAL ENGINEER FOR REVIEW AND APPROVAL.
2. BLOCK OUT OPENING ON TOP OF DECK AND RIBS.
3. DECK IS NOT TO BE CUT WHEN OPENINGS ARE BLOCKED OUT.
4. PLACE REINFORCING BARS IN CONTINUOUS RIBS IMMEDIATELY ADJACENT TO OPENING AND IN TOPPING SLAB PERPENDICULAR TO RIBS.
5. WHEN RIBS ARE SPACED AT 12" OR 8" ON CENTER, REINFORCING REQUIRED = 2-#4 FOR EACH RIB PARTIALLY OR FULLY CUT, PLACE ONE HALF OF REBARS ON EACH SIDE OF OPENING, 2 BARS MAXIMUM PER RIB.
6. WHEN RIBS ARE SPACED AT 6" ON CENTER, REINFORCING REQUIRED = 1-#4 (MINIMUM) FOR EACH RIB PARTIALLY OR FULLY CUT. ADD 1-#4 IF AN ODD NUMBER OF RIBS IS CUT, PLACE ONE HALF OF REBARS ON EACH SIDE OF OPENING, ONE BAR PER RIB.
7. PROVIDE ADEQUATE CHAIRS AND SPACERS TO HOLD REBAR SECURELY IN PLACE DURING PLACEMENT OF CONCRETE.
8. AFTER CONCRETE HAS BEEN PLACED AND HAS ATTAINED AT LEAST 70 PERCENT OF ITS DESIGN STRENGTH, THE BLOCKOUTS MAY BE REMOVED AND THE STEEL DECK MAY BE BURNED OUT AT THE EDGES OF THE OPENING.
9. FOR HOLES UP TO 6" DIAMETER OR 6"x6", REINFORCING WILL NOT BE REQUIRED.

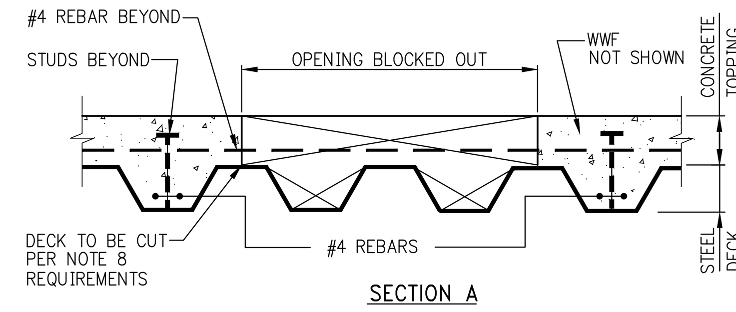

OPENING IN COMPOSITE SLAB

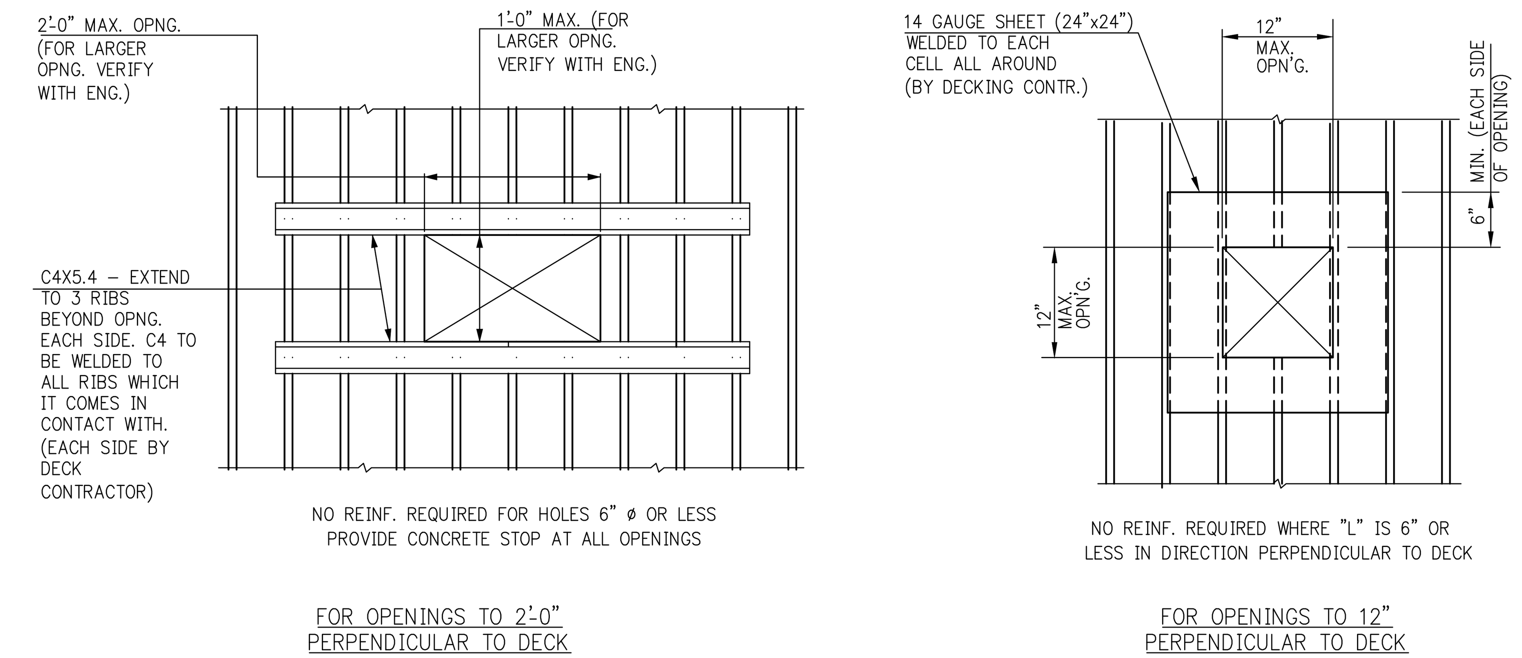

TYPICAL FLOOR DETAILS AT OPENINGS

NOTES:
1. FOR OPENING SIZE & LOC. SEE ARCH. & MEP DWG'S.
2. SPACING BETWEEN FLOOR OPENINGS SHOWN TO BE 3'-0" MIN. U.O.N.

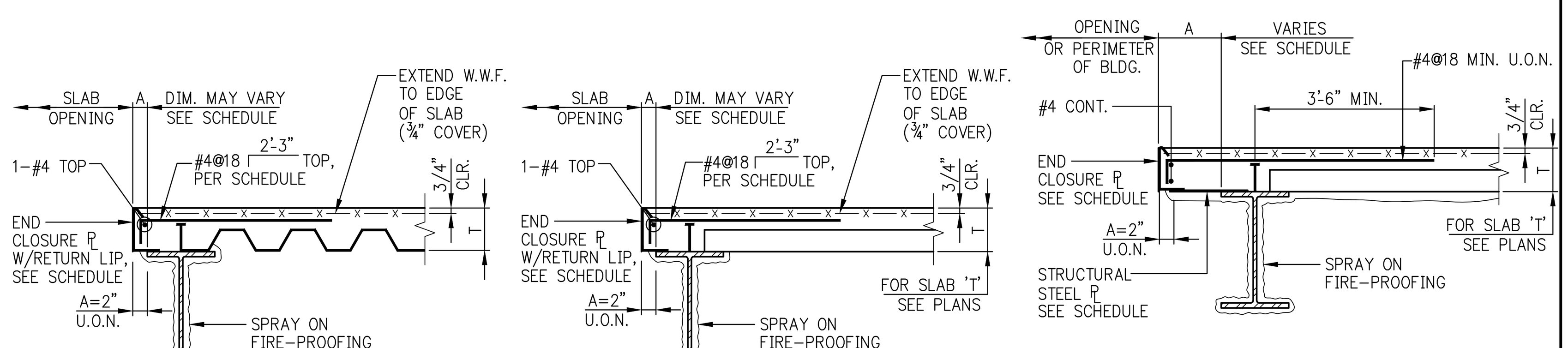

TYPICAL DETAILS OF SLAB EDGE AT OPENING

NOTES:
1. CLOSURE TO BEAR 2" ON FLANGE OF BEAM
2. WELD CLOSURE TO TOP FLANGE PER MANUFACTURER'S RECOMMENDATIONS.
3. PROVIDE RETURN LIP AT ALL VERTICAL LEGS, 1" FOR 10 GAGE, ¾" FOR 12 GAGE, ½" FOR 14 GAGE.
4. IF 'A' EXCEEDS DIMENSIONS SHOWN ABOVE, REINFORCE POUR STOP WITH STIFFENERS OR SHORE UP THE EDGE OF SLAB DURING POUR.

END CLOSURE PLATE SCHEDULE

T= UP TO AND INCLUDING 6¼"		T= OVER 6¼", UP TO AND INCLUDING 9"	
A	GAGE OF PLATE	A	GAGE OF PLATE
UP TO 4"	14	UP TO 4"	12
OVER 4" TO 8"	12	OVER 4" TO 8"	10
OVER 8" TO 10"	10	OVER 8" TO 12"	¼" THICK PL
10" TO 14"	3/16"	OVER 12" TO 15"	⅜" THICK PL
14" TO 18"	1/4"		

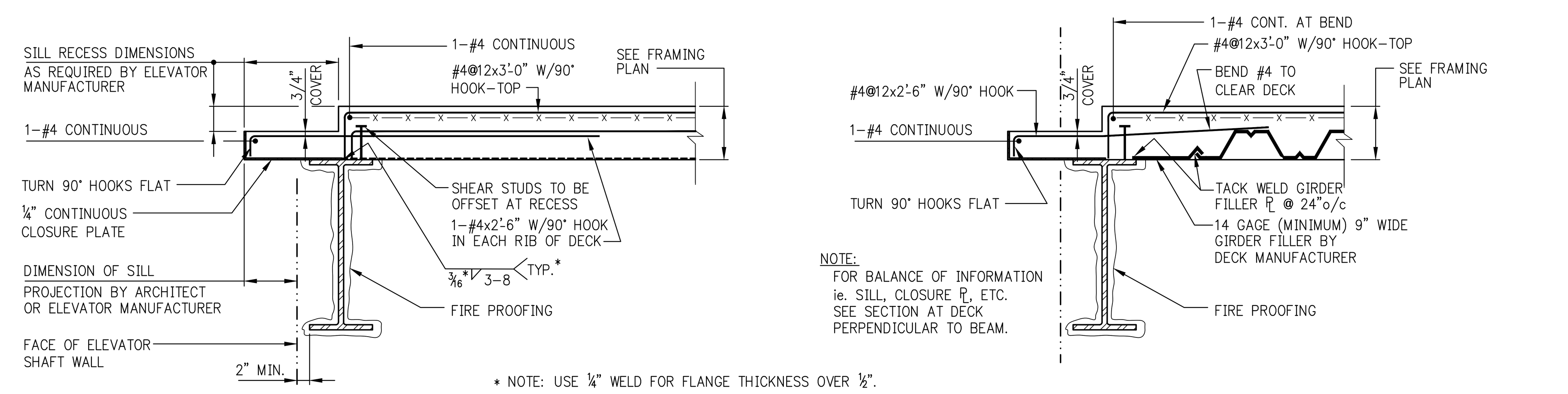

* NOTE: USE ¼" WELD FOR FLANGE THICKNESS OVER ½".

SECTION AT ELEVATOR DOORS-1
(DECK PERPENDICULAR TO BEAM)

SECTION AT ELEVATOR DOORS-2
(DECK PARALLEL TO BEAM)

ELEVATOR SILL RECESS

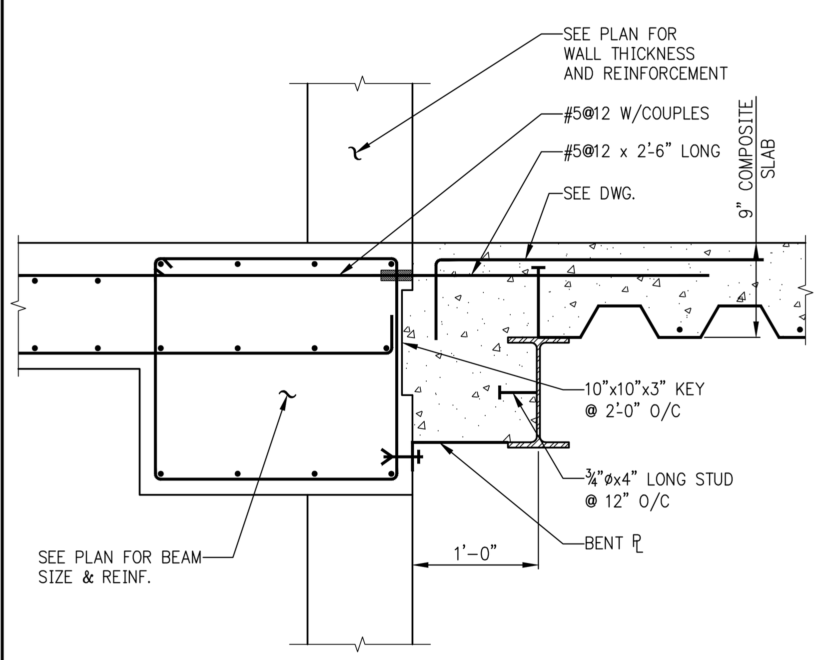

TYPICAL DETAIL-CONCRETE SLAB/CONCRETE WALL TO COMPOSITE SLAB CONNECTION

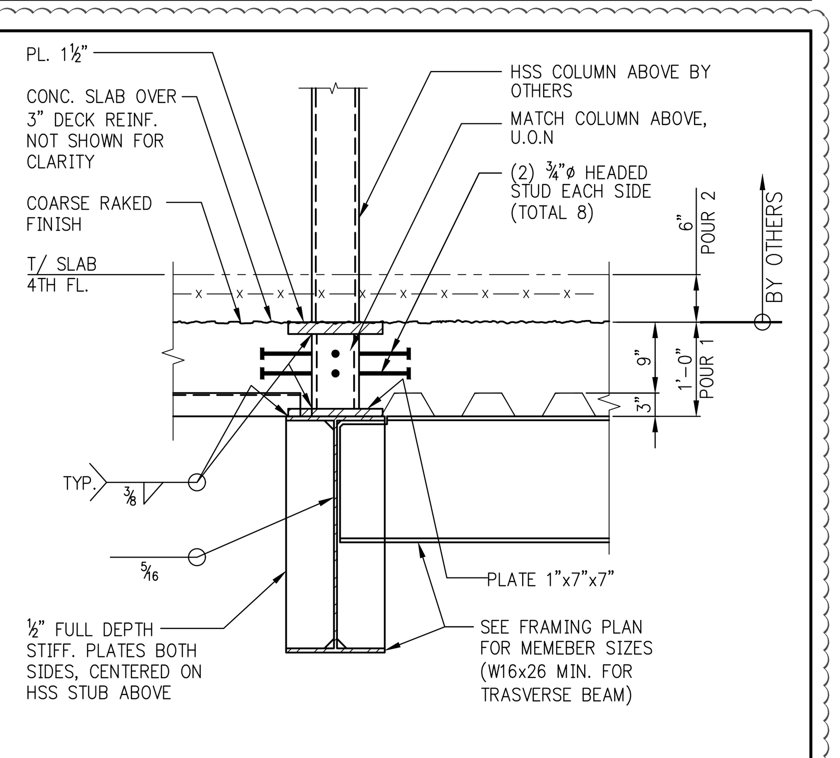

TYPICAL DETAIL FOR STEEL BEAM SUPPORTING SHEAR WALL POSTS/ BEARING WALL POSTS

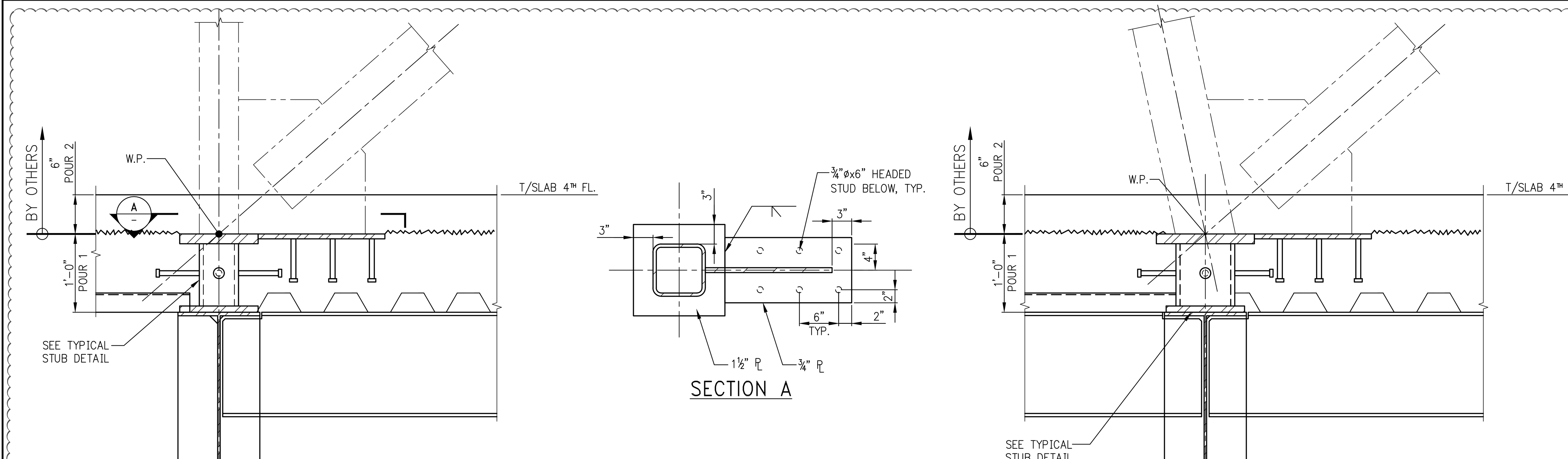

BRACED FRAME CONNECTIONS AT IH TOWER 4TH FLOOR

KEY PLAN:

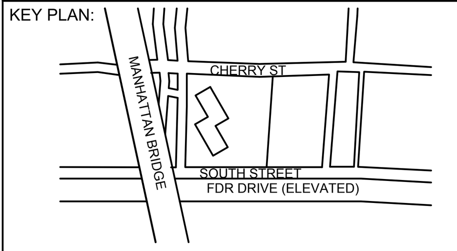

PROJECT NORTH | TRUE NORTH

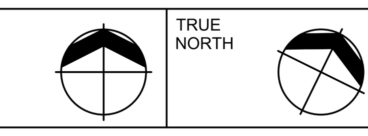

DEVELOPER:
EXTELL DEVELOPMENT COMPANY
805 Third Ave, 7th Floor
New York, NY 10022
TEL: 212-712-6000 FAX: 212-712-6100

ARCHITECT OF RECORD:
AAI ARCHITECTS, P.C.
14 Wall Street, 2nd Floor
New York, NY 10005
TEL: 212-964-4040 FAX: 212-964-4090

INTERIOR DESIGNER:
MEYER DAVIS
180 Varick St, suite 404
New York, NY 10014
TEL: 212-627-5574

LANDSCAPE DESIGNER:
WEST 8 URBAN DESIGN & LANDSCAPE ARCHITECTURE P.C.
333 Hudson Street, Suite 905
New York, NY 10013
TEL: 212-285-0088 FAX: 212-285-0228

STRUCTURAL ENGINEERS:
WSP
228 East 45th Street
New York, NY 10017
TEL: 212-687-9888 FAX: 646-487-5501

MEP ENGINEERS:
ICOR ASSOCIATES, LLC
485 C Route 1 South, Suite 200
Iseline, NJ 08830
TEL: 908-272-3300 FAX: 908-272-4440

GEOTECHNICAL ENGINEERS:
LANGAN ENGINEERING & ENVIRONMENTAL SERVICES
21 Penn Plaza - 360 West 31st Street, 8th Floor
New York, NY 10001
TEL: 212.479.5400 FAX: 212.479.5444

No.	DESCRIPTION:	DATE:
	50% DD	08-01-14
	DESIGN DEVELOPMENT	10-07-14
	STEEL BID PACKAGE	02-24-15
	ADDENDUM #3	03-27-15
	ADDENDUM #10	07-22-15
	ISSUED FOR FILING	07-28-15
	PRELIMINARY PRICING SET	09-21-15
	90% CONSTRUCTION DOCUMENTS	01-15-16
	ADDENDUM #16	02-04-16
	ISSUE FOR CONSTRUCTION	03-18-16
	ISSUED FOR FILING	05-22-17

Discrepancies must be reported immediately to the Architect before proceeding. Only figured dimensions are to be used. Contractors must check all dimensions on site. This drawing is protected by copyright.

ALL DIMENSIONS ARE SHOWN IN IMPERIAL.

CONSULTANT: WSP

PROJECT:
252 SOUTH STREET
NEW YORK, NY

DRAWING TITLE:
TYPICAL STEEL SUPERSTRUCTURE DETAILS 3

SEAL & SIGNATURE:

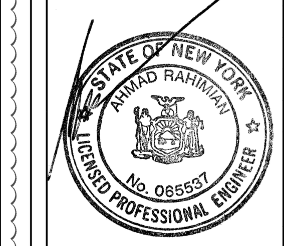

DATE:	07/25/14
PROJECT No:	1302510
DRAWN:	CADD
REV:	
CHK:	CL
SCALE:	N.T.S.
DWG No:	S-962.02
DOB PAGE No:	of

DOB EMPLOYEE STAMP: | DOB B-SCAN:

FILE NAME:
PLOT DATE:

DEPT OF BLDGS121180503 Job Number
E350761305-73 Scan Code
30" x 42" Arch E1 - SHEET SIZE

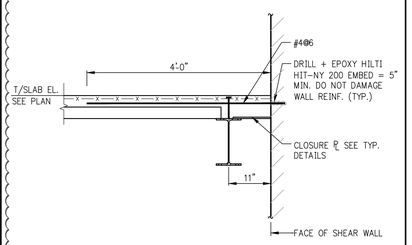

TYPICAL RING BEAM DETAIL

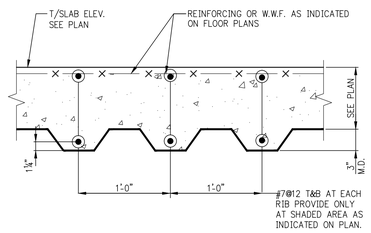

TYPICAL SLAB DETAIL WHERE LIVE LOAD + SUPER IMPOSED DEAD > 400 PSF

NOTES:
1. FOR LOCATION OF ADDITIONAL SLAB REINFORCING SEE PLAN.
2. REINFORCING SHALL BE DEVELOPED 5'-0" BEYOND THE NEAREST BEAMS SHOWN OUTSIDE THE SHADED AREAS ON PLAN.

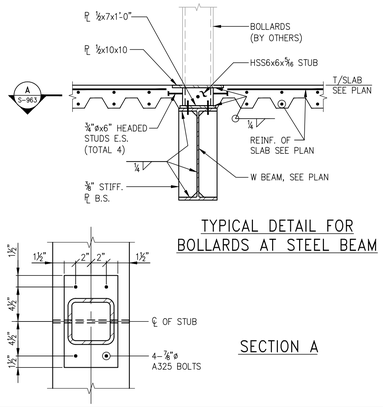

TYPICAL DETAIL FOR BOLLARDS AT STEEL BEAM

SECTION A

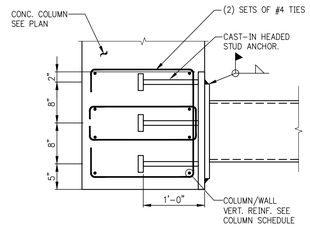

PLAN

TE2A

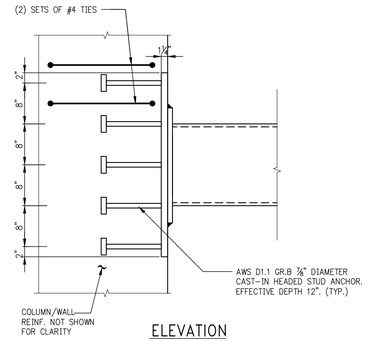

ELEVATION

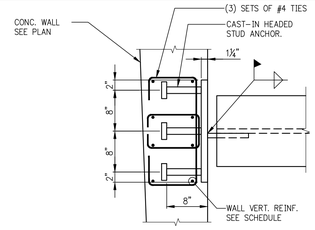

PLAN

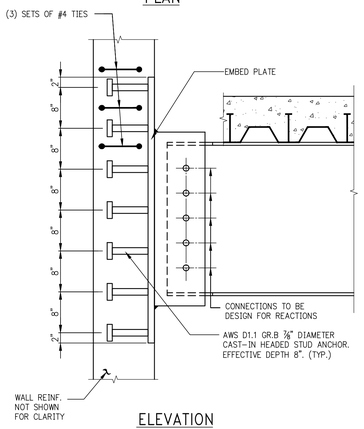

ELEVATION

TE12

TYPICAL DETAIL STEEL BEAM
TO CONCRETE WALL CONNECTION
SCALE: 1"= 1'-0"

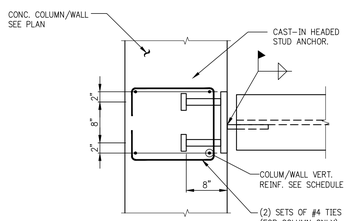

PLAN

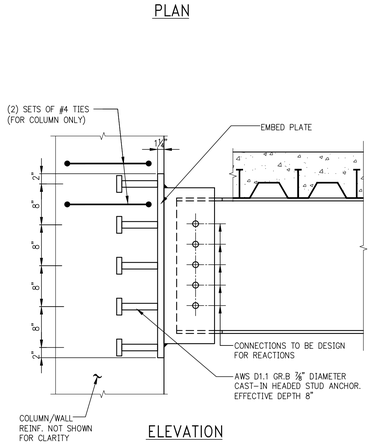

ELEVATION

TE7

TYPICAL DETAIL STEEL BEAM
TO CONCRETE COLUMN/WALL CONNECTION
SCALE: 1"= 1'-0"

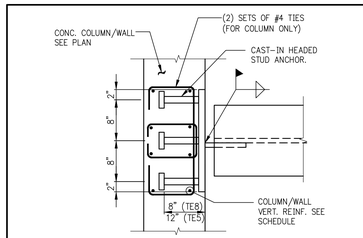

PLAN

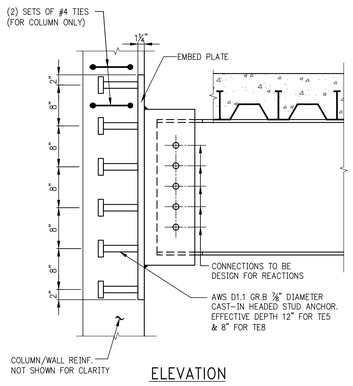

ELEVATION

TE5/TE8

TYPICAL DETAIL STEEL BEAM
TO CONCRETE COLUMN/WALL CONNECTION
SCALE: 1"= 1'-0"

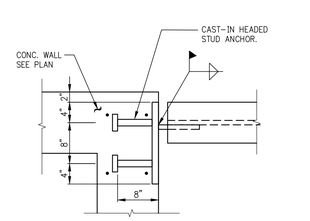

PLAN

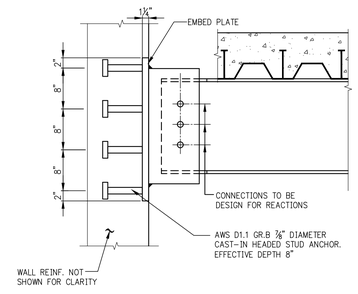

ELEVATION

TE9

TYPICAL DETAIL STEEL BEAM
TO CONCRETE WALL CONNECTION
SCALE: 1"= 1'-0"

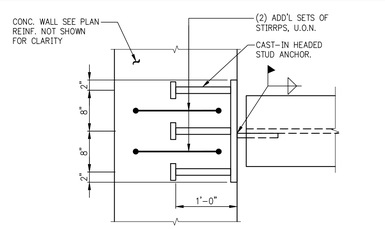

PLAN

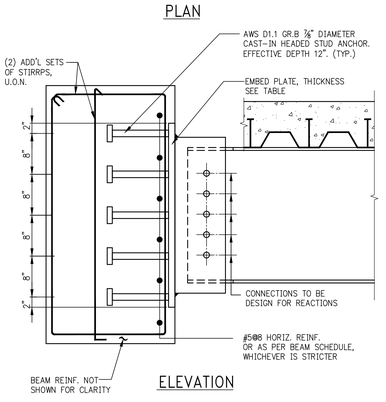

ELEVATION

TYPE	ROW	ENBED PLATE THICKNESS
TE1	4	1¼"
TE2	5	1¼"
TE3	6	1¼"
TE4	7	1¼"
TE6	9	1½"

TYPICAL DETAIL STEEL BEAM
TO CONCRETE BEAM CONNECTION
1"= 1'-0"

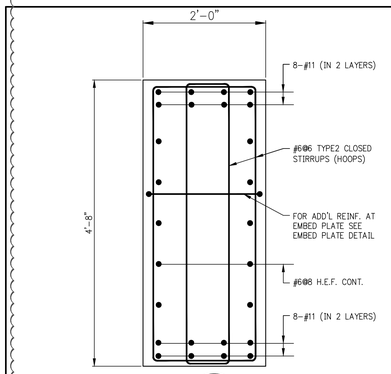

SECTION
SCALE: 1"=1'-0"

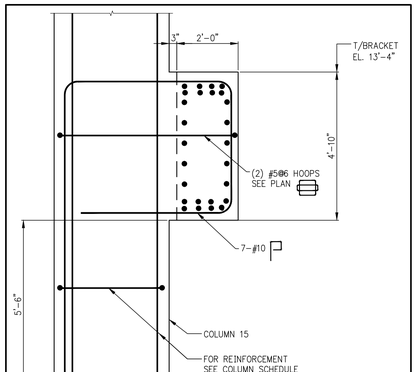

SECTION
SCALE: 1/2"=1'-0"

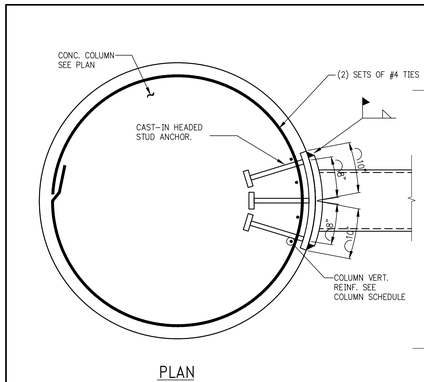

PLAN

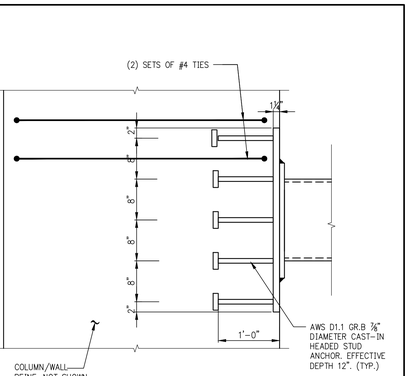

ELEVATION

TE10

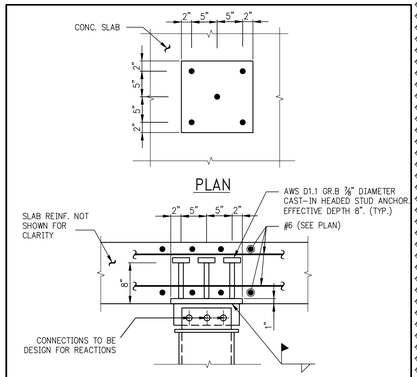

ELEVATION

TE11

KEY PLAN:

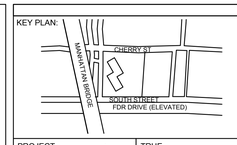

PROJECT NORTH

TRUE NORTH

DEVELOPER:
EXTELL DEVELOPMENT COMPANY
805 Third Ave, 7th Floor
New York, NY 10022
TEL: 212-712-6000 FAX: 212-712-6100

ARCHITECT OF RECORD:
AAI ARCHITECTS, P.C.
14 Wall Street, 2nd Floor
New York, NY 10005
TEL: 212-964-4040 FAX: 212-964-4090

INTERIOR DESIGNER:
MEYER DAVIS
180 Varick St, suite 404
New York, NY 10014
TEL: 212-627-5574

LANDSCAPE DESIGNER:
WEST 8 URBAN DESIGN & LANDSCAPE ARCHITECTURE P.C.
333 Hudson Street, Suite 905
New York, NY 10013
TEL: 212-285-0088 FAX: 212-285-0228

STRUCTURAL ENGINEERS:
WSP
228 East 45th Street
New York, NY 10017
TEL: 212-687-9888 FAX: 646-487-5501

MEP ENGINEERS:
ICOR ASSOCIATES, LLC
485 C Route 1 South, Suite 200
Iselin, NJ 08830
TEL: 908-272-3300 FAX: 908-272-4440

GEOTECHNICAL ENGINEERS:
LANGAN ENGINEERING & ENVIRONMENTAL SERVICES
21 Penn Plaza - 360 West 31st Street, 8th Floor
New York, NY 10001
TEL: 212.479.5400 FAX: 212.479.5444

No.	DESCRIPTION:	DATE:
	50% DD	08-01-14
	DESIGN DEVELOPMENT	10-07-14
	ADDENDUM #3	03-27-15
	50% CONSTRUCTION DOCUMENTS	04-08-15
	ADDENDUM #10	07-22-15
	ISSUED FOR FILING	07-28-15
	90% CONSTRUCTION DOCUMENTS	01-15-16
	ADDENDUM #16	02-04-16
	ASI #55	02-12-16
	ASI #58	03-04-16
	ASI #59	03-11-16
	ISSUE FOR CONSTRUCTION	03-18-16
	ISSUED FOR FILING	05-22-17

Discrepancies must be reported immediately to the Architect before proceeding. Only figured dimensions are to be used. Contractors must check all dimensions on site. This drawing is protected by copyright.

ALL DIMENSIONS ARE SHOWN IN IMPERIAL.

CONSULTANT:
WSP

PROJECT:
252 SOUTH STREET
NEW YORK, NY

DRAWING TITLE:
TYPICAL STEEL SUPERSTRUCTURE DETAILS 4

SEAL & SIGNATURE:

DATE:	07/25/14
PROJECT No:	1302510
DRAWN: CADD	REV:
CHK: CL	
SCALE: N.T.S.	
DWG No:	**S-963.01**
DOB PAGE No:	of

DOB EMPLOYEE STAMP:

Tina Mathew, RA
Tina Mathew
Building
APPROVED
Under Directive 2 of 1975
AMENDED APPLICATION
Date: 10/23/2017
NYC Development Hub

DOB B-SCAN:

FILE NAME:
PLOT DATE:

DEPT OF BLDGS121185069 Job Number
ES3121267111 Scan Code
30" x 42" Arch E1 - SHEET SIZE

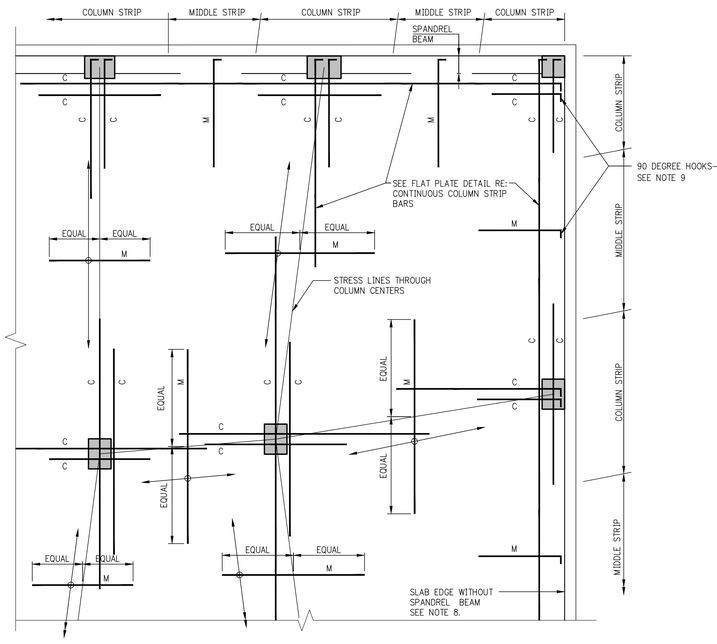

TOP REINFORCEMENT

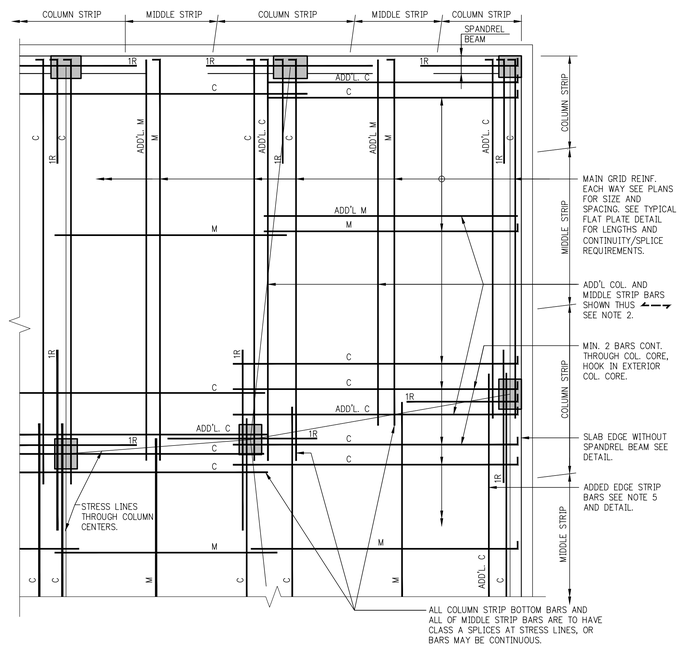

BOTTOM REINFORCEMENT

NOTES FOR TOP REINFORCEMENT

1. 'C' DENOTES COLUMN STRIP BARS (LONG AND SHORT BARS ARE ALTERNATED). 'M' DENOTES MIDDLE STRIP BARS.
2. FOR SIZE, SPACING, NUMBER, ETC. OF REINFORCING BARS, SEE FRAMING PLANS.
3. WHERE COLUMN STRIP BAR LENGTHS ARE SHOWN ON FRAMING PLANS THEY ARE FOR LONGER BARS, WHICH ARE TO BE ALTERNATED WITH SHORTER BARS. SEE TYPICAL FLAT PLATE DETAIL.
4. COLUMN STRIP BARS ARE TO BE CENTERED OVER COLUMNS UNLESS OTHERWISE INDICATED ON PLANS.
5. MIDDLE STRIP BARS ARE TO BE CENTERED OVER STRESS LINES UNLESS OTHERWISE INDICATED ON PLANS.
6. MIDDLE STRIP BARS ARE TO BE SPACED AS SHOWN ON PLANS. FIRST BAR IS TO BE LOCATED A DISTANCE FROM LAST COLUMN STRIP BAR NOT TO EXCEED MIDDLE STRIP BAR SPACING.
7. COLUMN STRIP BARS PARALLEL TO SPANDREL BEAMS ARE TO HAVE FIRST BAR LOCATED AT ONE–HALF SCHEDULED SPACING FROM INSIDE FACE OF BEAM, SIX INCHES MAXIMUM.
8. AT SLAB EDGES WITHOUT SPANDREL BEAMS, SEE TYPICAL DETAIL FOR ADDITIONAL CONTINUOUS EDGE BARS AND FOR COLUMN STRIP BAR PLACEMENT PARALLEL TO SLAB EDGE.
9. PROVIDE 90 DEGREE HOOK AT EVERY DISCONTINUOUS TOP BAR, COLUMN AND MIDDLE STRIPS, AT EDGE OF SLAB, WITH OR WITHOUT SPANDREL BEAMS (2" CLEAR COVER TO HOOK)

BAR LENGTH EXTENSIONS REQUIRED AT EPOXY COATED REINFORCEMENT (WHERE SPECIFIED ON PLANS)
1. TO REINFORCING BAR LENGTHS SHOWN ON PLAN OR AS DETERMINED FROM TYPICAL DETAILS, ADD AN ADDITIONAL LENGTH AT EACH END (EXCEPT AT HOOKED BARS) EQUAL TO 50% OF BAR DEVELOPMENT LENGTH (SEE TABLE #2)
2. DEVELOPMENT LENGTHS AND LAP SPLICE LENGTHS SHOWN ARE TO BE INCREASED, IN CONFORMANCE WITH TABLES 1 & 2 IN TYPICAL DETAILS FOR REINFORCEMENT DEVELOPMENT AND SPLICE LENGTHS, OVER VALUES FOR UNCOATED BARS.

FLAT SLAB REINFORCEMENT DETAILS

NOTES FOR BOTTOM REINFORCEMENT:

1. 'C' DENOTES A COLUMN STRIP BAR, PART OF MAIN GRID. 'ADD'L. C' DENOTES COLUMN STRIP BARS ADDITIONAL TO MAIN GRID BARS. 'M' DENOTES A MIDDLE STRIP BAR, PART OF MAIN GRID. 'ADD'L M' DENOTES MIDDLE STRIP BARS ADDITIONAL TO MAIN GRID BARS.
2. PLACE ADDITIONAL BARS BETWEEN MAIN GRID BARS. IN COLUMN STRIPS GROUP ABOUT STRESS LINE. IN MIDDLE STRIPS DISTRIBUTE THROUGHOUT STRIP.
3. ALL COLUMN STRIP BOTTOM BARS ARE TO BE CONTINUOUS AND HOOKED 90° AT EDGES OF SLAB OR AT SLAB OPENINGS, OR AT OTHER DISCONTINUITIES.
4. ALL MIDDLE STRIP BOTTOM BARS ARE TO BE CONTINUOUS AND ARE TO EXTEND TO EDGE OF SLAB WHERE 50% OF BARS ARE TO BE HOOKED.
5. IN EDGE STRIP WITHOUT SPANDREL BEAMS START ADDITIONAL BARS TWO INCHES FROM CONTINUOUS EDGE BARS – SEE FLAT PLATE DETAIL AT EDGE OF SLAB.
6. '1R' DENOTES HORIZONTAL STRUCTURAL INTEGRITY REINFORCEMENT. THE REINFORCEMENT SHALL BE PLACED INSIDE COLUMN CAGE AND SHALL BE EXTENDED ON ALL SIDES OF THE COLUMN INTO ADJACENT SLAB AT LEAST ONE–THIRD OF SPAN LENGTH WHERE REINFORCEMENT CANNOT BE EXTENDED BEYOND THE COLUMN–IT SHALL BE HOOKED

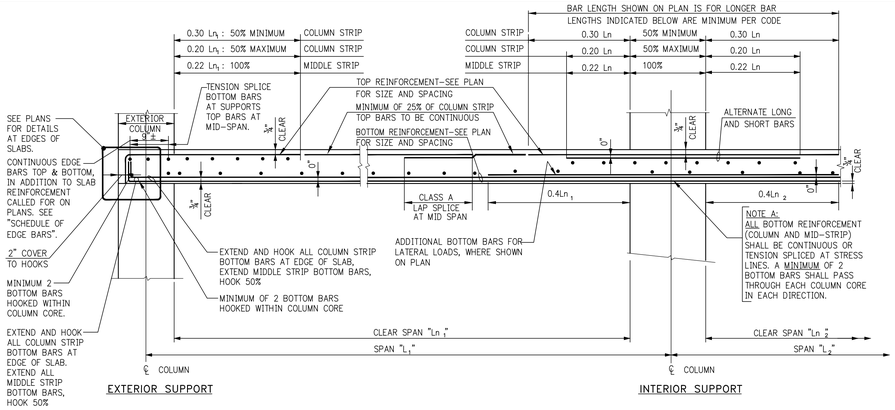

EXTERIOR SUPPORT

INTERIOR SUPPORT

FLAT PLATE DETAIL

(FOR DROP PANEL SEE DETAIL)

AT INTERIOR SUPPORTS USE LARGER OF Ln_1 OR Ln_2 FOR Ln

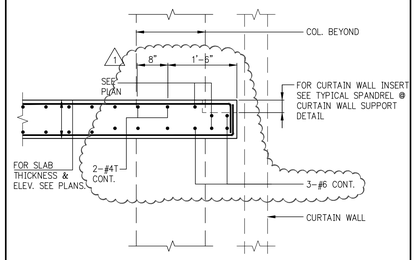

TYPICAL SPANDREL @ EDGE OF SLAB

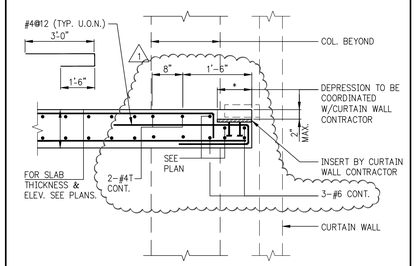

TYPICAL SPANDREL @ CURTAIN WALL SUPPORT

(AT EDGE OF SLAB W/O BEAM)

NOTE:
THIS CONNECTION IS APPLICABLE BETWEEN COLUMNS
CONNECTION MUST BE CHECK BY E.O.R AT ALL COLUMN LOCATION.

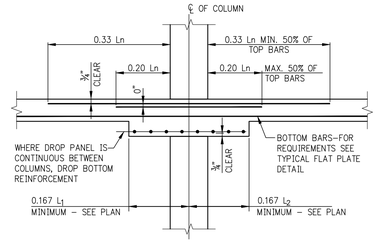

FLAT SLAB WITH DROP PANELS AT COLUMN STRIP

(MID–STRIP BARS SAME AS TYPICAL FLAT PLATE DETAIL)

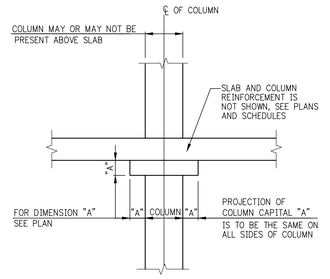

COLUMN WITH CAPITAL

KEY PLAN:

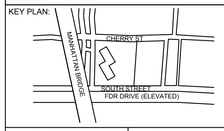

PROJECT NORTH

TRUE NORTH

DEVELOPER:
EXTELL DEVELOPMENT COMPANY
805 Third Ave, 7th Floor
New York, NY 10022
TEL: 212-712-6000 FAX: 212-712-6100

ARCHITECT OF RECORD:
AAI ARCHITECTS, P.C.
14 Wall Street, 2nd Floor
New York, NY 10005
TEL: 212-964-4040 FAX: 212-964-4090

INTERIOR DESIGNER:
MEYER DAVIS
180 Varick St, suite 404
New York, NY 10014
TEL: 212-627-5574

LANDSCAPE DESIGNER:
WEST 8 URBAN DESIGN & LANDSCAPE ARCHITECTURE P.C.
333 Hudson Street, Suite 905
New York, NY 10013
TEL: 212-285-0088 FAX: 212-285-0228

STRUCTURAL ENGINEERS:
WSP
228 East 45th Street
New York, NY 10017
TEL: 212-687-9888 FAX: 646-487-5501

MEP ENGINEERS:
ICOR ASSOCIATES, LLC
485 C Route 1 South, Suite 200
Iseline, NJ 08830
TEL: 908-272-3300 FAX: 908-272-4440

GEOTECHNICAL ENGINEERS:
LANGAN ENGINEERING & ENVIRONMENTAL SERVICES
21 Penn Plaza - 360 West 31st Street, 8th Floor
New York, NY 10001
TEL: 212.479.5400 FAX: 212.479.5444

No.	DESCRIPTION:	DATE:
	50% DD	08–01–14
	ISSUED FOR DOT	08–07–14
	DESIGN DEVELOPMENT	10–07–14
	CONCRETE BID PACKAGE	03–06–15
	ISSUE FOR CONSTRUCTION	03–18–16
1	ASI #68	07–01–16
	ISSUED FOR FILING	05–22–17

Discrepancies must be reported immediately to the Architect before proceeding. Only figured dimensions are to be used. Contractors must check all dimensions on site. This drawing is protected by copyright.

ALL DIMENSIONS ARE SHOWN IN IMPERIAL.

CONSULTANT:
WSP

PROJECT:
252 SOUTH STREET
NEW YORK, NY

DRAWING TITLE:
TYPICAL CONCRETE SUPERSTRUCTURE DETAILS 2

SEAL & SIGNATURE:

STATE OF NEW YORK · RICHARD RASTEGAR · No. 085857 · LICENSED PROFESSIONAL ENGINEER

DATE:	07/25/14
PROJECT No:	1302510
DRAWN: CADD	REV:
CHK: CL	
SCALE: N.T.S.	
DWG No:	**S-965.01**
DOB PAGE No:	of

DOB EMPLOYEE STAMP:

Tina Mathew, RA
APPROVED
Under Directive 2 of 1975
AMENDED APPLICATION
Date: 10/23/2017
NYC Development Hub

DOB B-SCAN:

FILE NAME:
PLOT DATE:

DEPT OF BLDGS 121185528 Job Number
ES431579853 Scan Code

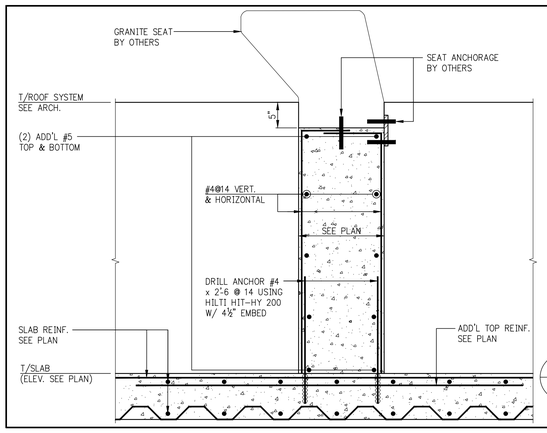

1 S-969

TYPICAL DETAIL @ CONC WALL SUPPORTING GRANITE SEAT
SCALE: 1"=1'-0"

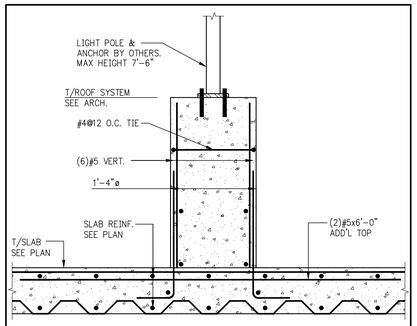

TYPICAL FOOTING FOR LIGHT POLE
SCALE: 1"=1'-0"

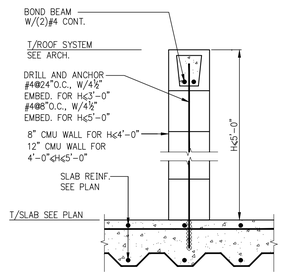

TYPICAL LANDSCAPE RETAINING WALL DETAIL 1
SCALE: 1"=1'-0"

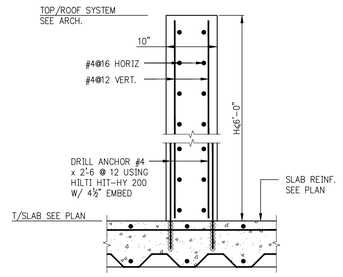

TYPICAL LANDSCAPE RETAINING WALL DETAIL 2
SCALE: 1"=1'-0"

KEY PLAN:

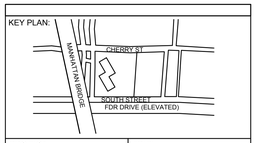

PROJECT NORTH

TRUE NORTH

DEVELOPER:
EXTELL DEVELOPMENT COMPANY
805 Third Ave, 7th Floor
New York, NY 10022
TEL: 212-712-6000 FAX: 212-712-6100

ARCHITECT OF RECORD:
AAI ARCHITECTS, P.C.
14 Wall Street, 2nd Floor
New York, NY 10005
TEL: 212-964-4040 FAX: 212-964-4090

INTERIOR DESIGNER:
MEYER DAVIS
180 Varick St, suite 404
New York, NY 10014
TEL: 212-627-5574

LANDSCAPE DESIGNER:
WEST 8 URBAN DESIGN & LANDSCAPE ARCHITECTURE P.C.
333 Hudson Street, Suite 905
New York, NY 10013
TEL: 212-285-0088 FAX: 212-285-0228

STRUCTURAL ENGINEERS:
WSP
228 East 45th Street
New York, NY 10017
TEL: 212-687-9888 FAX: 646-487-5501

MEP ENGINEERS:
ICOR ASSOCIATES, LLC
485 C Route 1 South, Suite 200
Iseline, NJ 08830
TEL: 908-272-3300 FAX: 908-272-4440

GEOTECHNICAL ENGINEERS:
LANGAN ENGINEERING & ENVIRONMENTAL SERVICES
21 Penn Plaza - 360 West 31st Street, 8th Floor
New York, NY 10001
TEL: 212.479.5400 FAX: 212.479.5444

No.	DESCRIPTION:	DATE:
	ISSUED FOR FILING	05-22-17

Discrepancies must be reported immediately to the Architect before proceeding. Only figured dimensions are to be used. Contractors must check all dimensions on site. This drawing is protected by copyright.

ALL DIMENSIONS ARE SHOWN IN IMPERIAL.

CONSULTANT:
WSP

PROJECT:
252 SOUTH STREET
NEW YORK, NY

DRAWING TITLE:
TYPICAL CONCRETE SUPERSTRUCTURE DETAILS 5

SEAL & SIGNATURE:

DATE:	07/25/14	
PROJECT No:	1302510	
DRAWN:	CADD	REV:
CHK:	CL	
SCALE:	N.T.S.	
DWG No:	S-969.00	
DOB PAGE No:	of	

DOB EMPLOYEE STAMP:

DOB B-SCAN:

30" x 42" Arch E1 - SHEET SIZE

FILE NAME:
PLOT DATE:

DEPT OF BLDGS121185039 Job Number
ES4089944092 Scan Code
30" x 42" ANSI E1 - SHEET SIZE

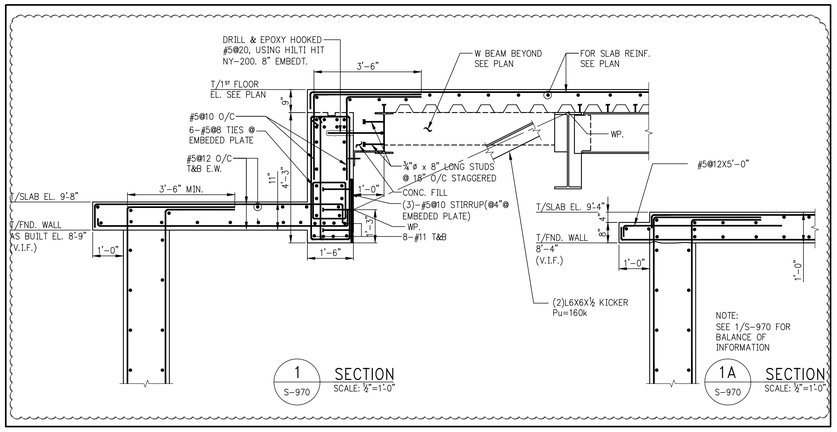

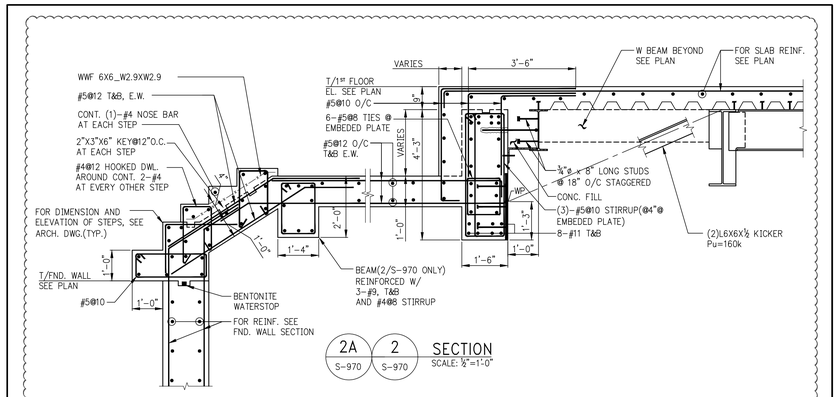

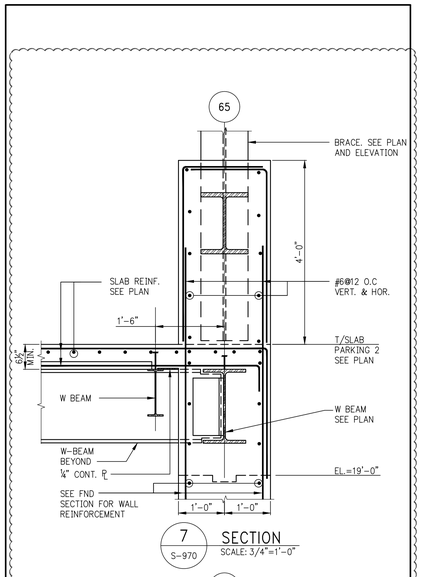

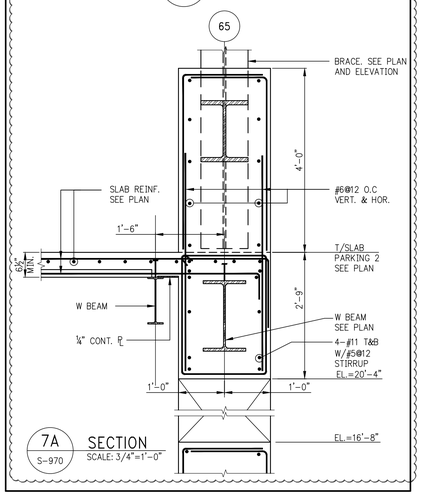

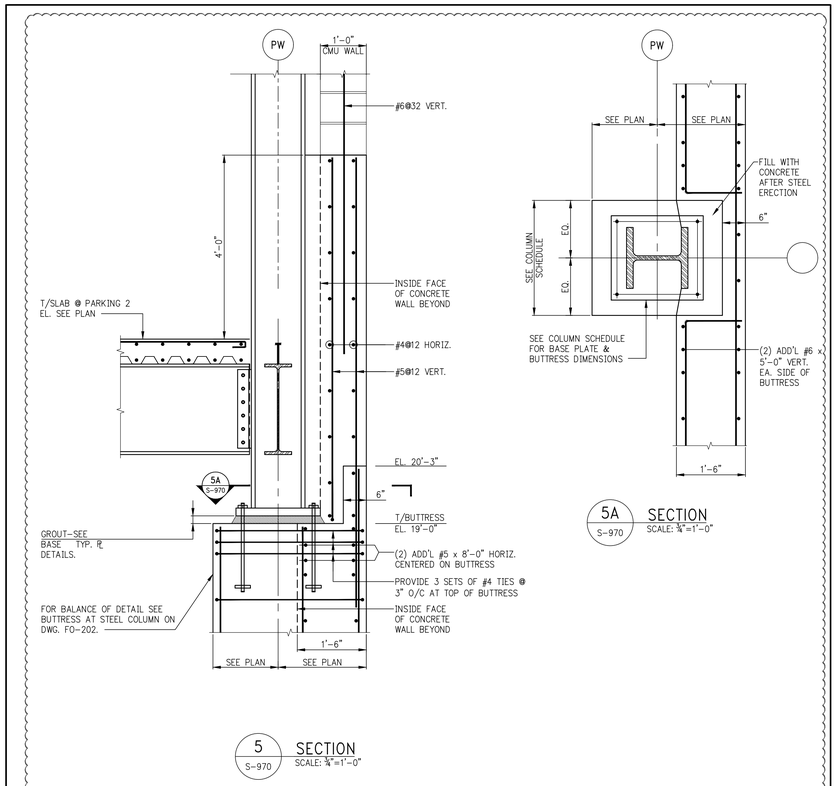

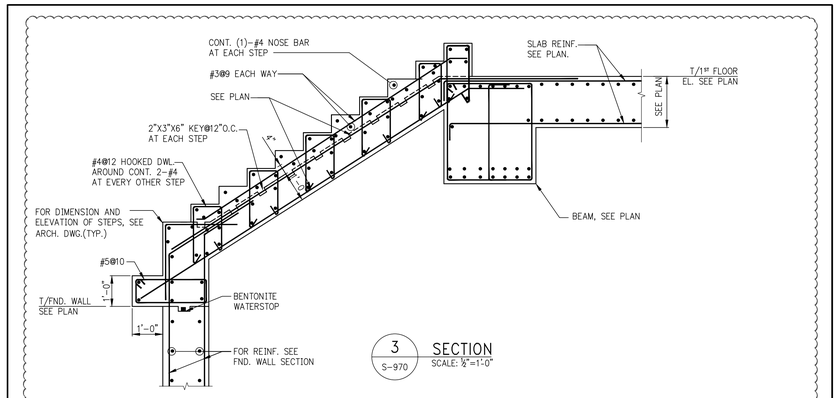

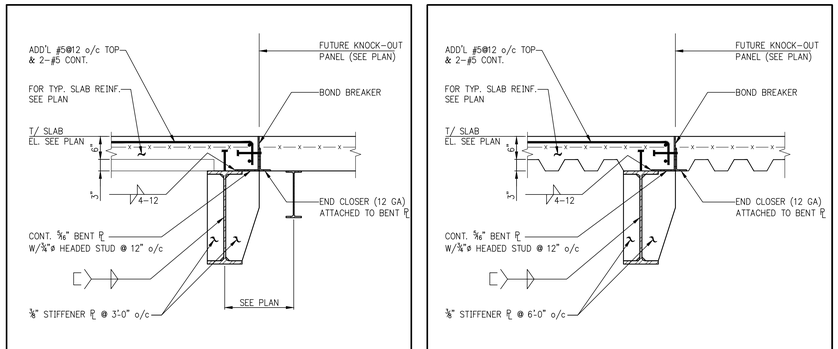

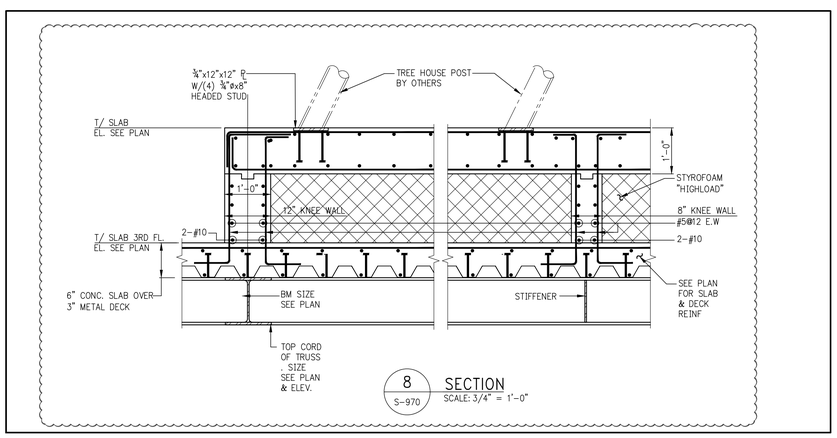

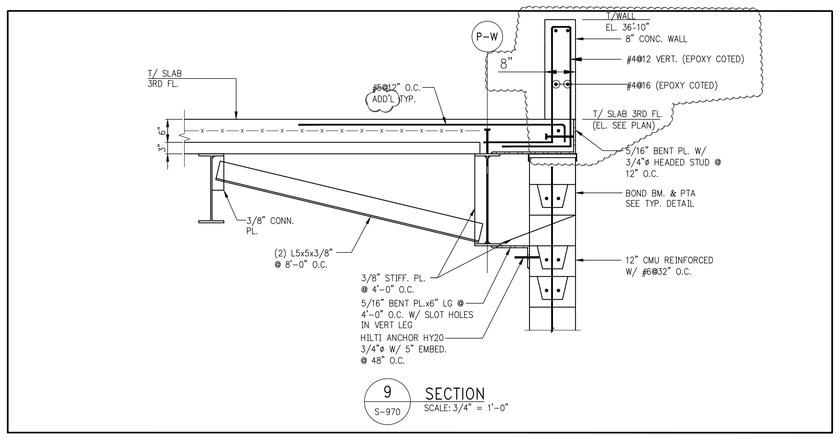

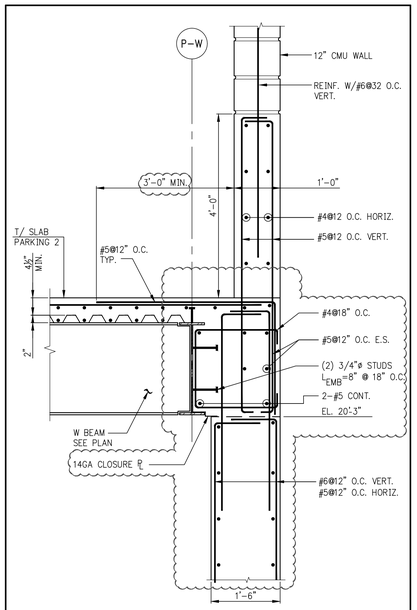

KEY PLAN:

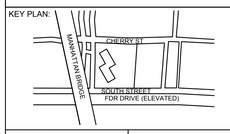

PROJECT NORTH | TRUE NORTH

DEVELOPER:
EXTELL DEVELOPMENT COMPANY
805 Third Ave, 7th Floor
New York, NY 10022
TEL: 212-712-6000 FAX: 212-712-6100

ARCHITECT OF RECORD:
AAI ARCHITECTS, P.C.
14 Wall Street, 2nd Floor
New York, NY 10005
TEL: 212-964-4040 FAX: 212-964-4090

INTERIOR DESIGNER:
MEYER DAVIS
180 Varick St, suite 404
New York, NY 10014
TEL: 212-627-5574

LANDSCAPE DESIGNER:
WEST 8 URBAN DESIGN & LANDSCAPE ARCHITECTURE P.C.
333 Hudson Street, Suite 905
New York, NY 10013
TEL: 212-285-0088 FAX: 212-285-0228

STRUCTURAL ENGINEERS:
WSP
228 East 45th Street
New York, NY 10017
TEL: 212-687-9888 FAX: 646-487-5501

MEP ENGINEERS:
ICOR ASSOCIATES, LLC
485 C Route 1 South, Suite 200
Iseline, NJ 08830
TEL: 908-272-3300 FAX: 908-272-4440

GEOTECHNICAL ENGINEERS:
LANGAN ENGINEERING & ENVIRONMENTAL SERVICES
21 Penn Plaza - 360 West 31st Street, 8th Floor
New York, NY 10001
TEL: 212.479.5400 FAX: 212.479.5444

No.	DESCRIPTION:	DATE:
	STEEL BID PACKAGE	02-24-15
	CONCRETE BID PACKAGE	03-06-15
	ADDENDUM #3	03-27-15
	50% CONSTRUCTION DOCUMENTS	04-08-15
	ADDENDUM #4	04-24-15
	ADDENDUM #5	05-01-15
	ISSUED FOR FILING	07-28-15
	ADDENDUM #14	10-22-15
	ADDENDUM #15	11-18-15
	90% CONSTRUCTION DOCUMENTS	01-15-16
	ADDENDUM #16	02-04-16
	ASI #57	02-26-16
	ISSUE FOR CONSTRUCTION	03-18-16
1	ASI #61	04-22-16
2	ASI #68	07-01-16
	ISSUED FOR FILING	05-22-17

Discrepancies must be reported immediately to the Architect before proceeding. Only figured dimensions are to be used. Contractors must check all dimensions on site. This drawing is protected by copyright.

ALL DIMENSIONS ARE SHOWN IN IMPERIAL.

CONSULTANT: WSP

PROJECT:
252 SOUTH STREET
NEW YORK, NY

DRAWING TITLE:
SUPERSTRUCTURE SECTIONS 1

SEAL & SIGNATURE: STATE OF NEW YORK · ANAND RAMNATH · LICENSED PROFESSIONAL ENGINEER · No. 085552

DATE:	07/25/14
PROJECT No:	1302510
DRAWN: CADD	REV:
CHK: CL	
SCALE: N.T.S.	
DWG No:	**S-970.02**
DOB PAGE No:	of

DOB EMPLOYEE STAMP: Tina Mathew, RA — APPROVED — Under Directive 2 of 1975 — AMENDED APPLICATION — Date: 10/23/2017 — NYC Development Hub

DOB B-SCAN:

FILE NAME:
PLOT DATE:

DEPT OF BLDGS121185028 Job Number
E50852256626 Scan Code
30" x 42" Arch E1 - SHEET SIZE

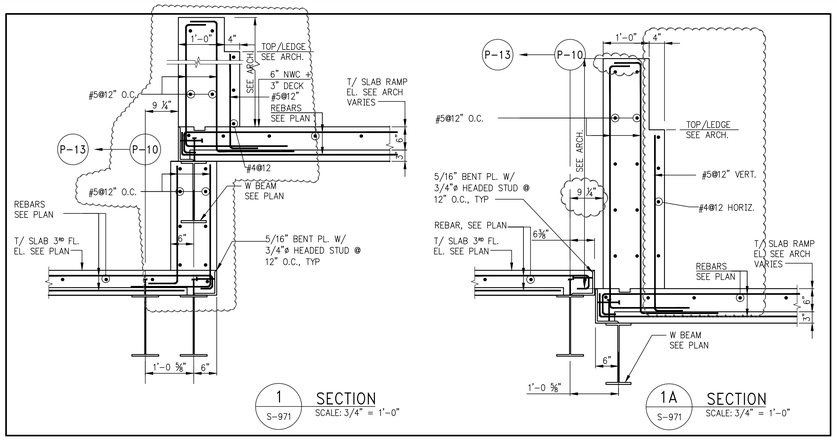

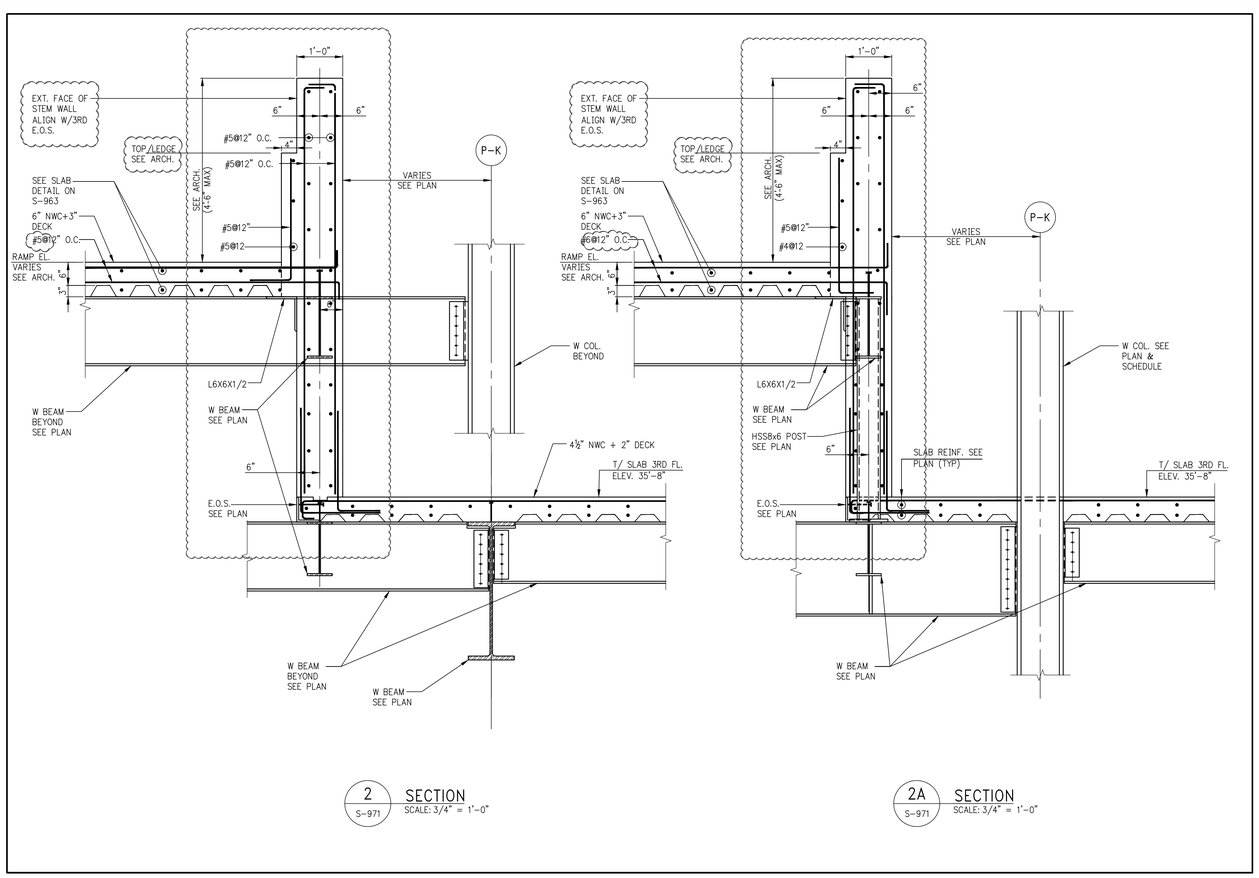

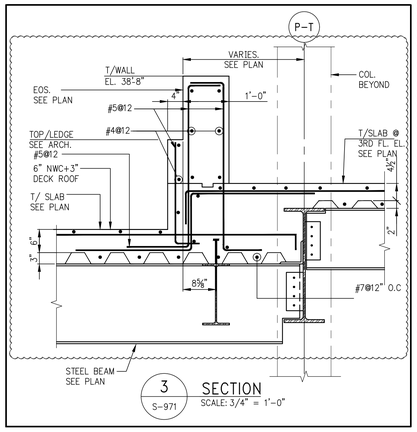

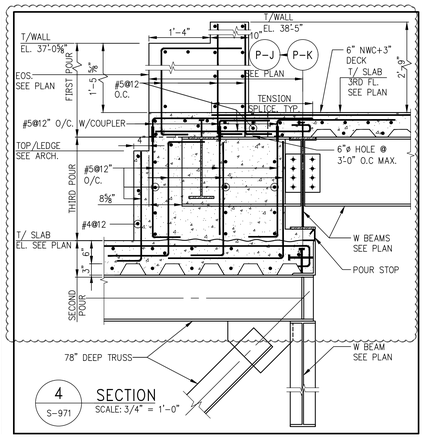

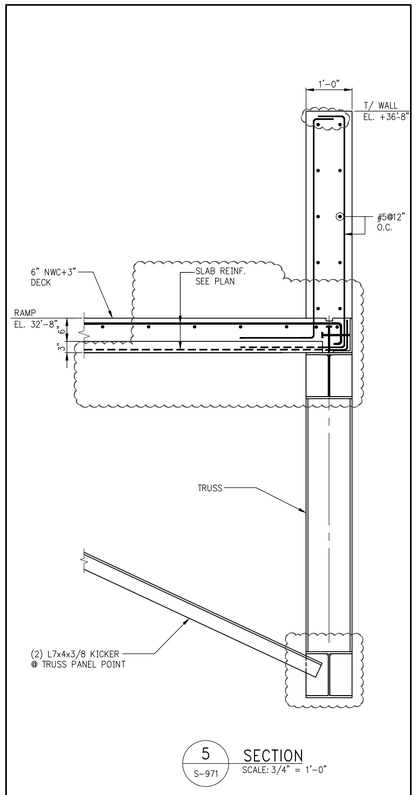

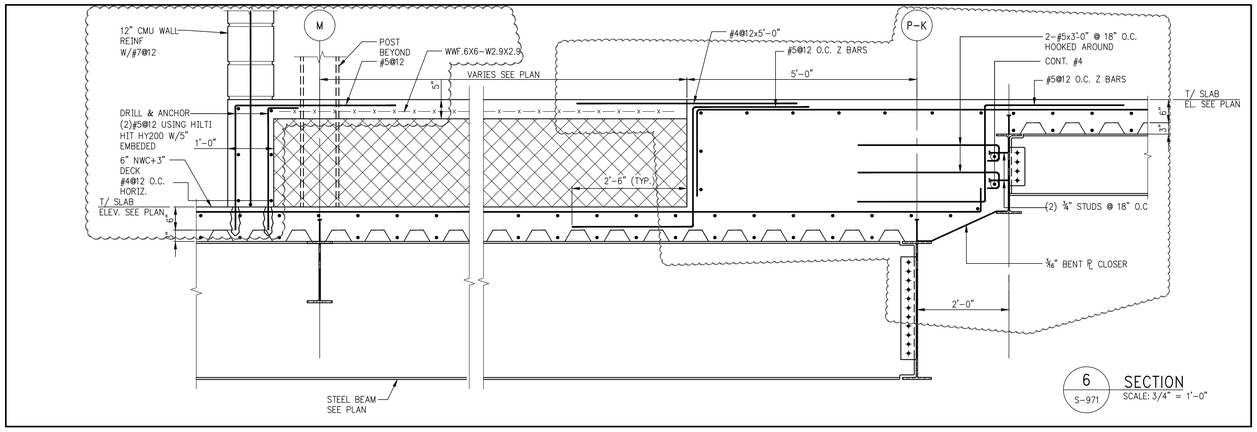

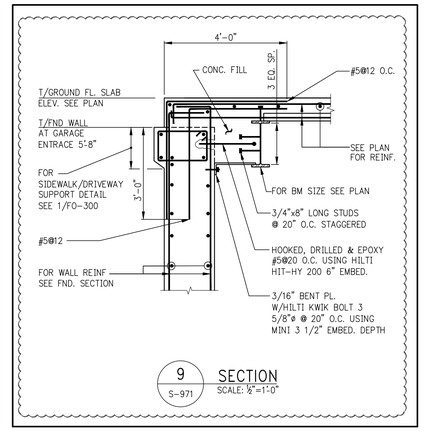

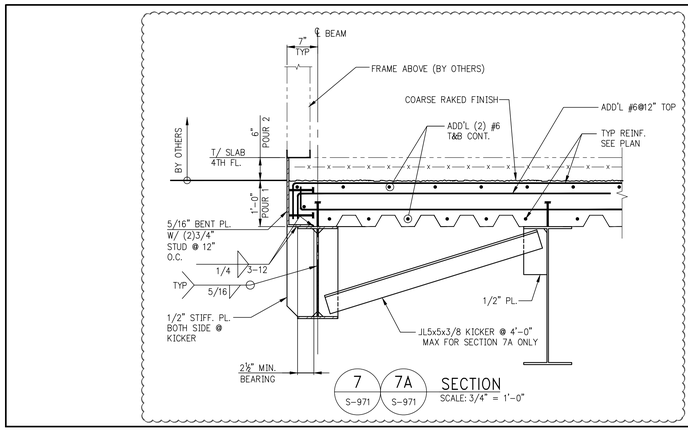

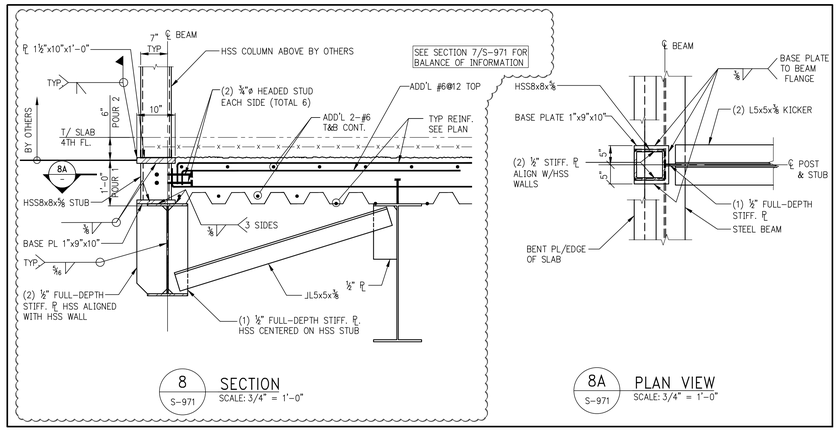

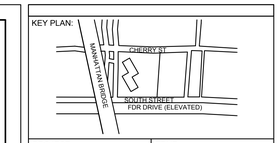

PROJECT NORTH | TRUE NORTH

DEVELOPER:
EXTELL DEVELOPMENT COMPANY
805 Third Ave, 7th Floor
New York, NY 10022
TEL: 212-712-6000 FAX: 212-712-6100

ARCHITECT OF RECORD:
AAI ARCHITECTS, P.C.
14 Wall Street, 2nd Floor
New York, NY 10005
TEL: 212-964-4040 FAX: 212-964-4090

INTERIOR DESIGNER:
MEYER DAVIS
180 Varick St, suite 404
New York, NY 10014
TEL: 212-627-5574

LANDSCAPE DESIGNER:
WEST 8 URBAN DESIGN & LANDSCAPE ARCHITECTURE P.C.
333 Hudson Street, Suite 905
New York, NY 10013
TEL: 212-285-0088 FAX: 212-285-0228

STRUCTURAL ENGINEERS:
WSP
228 East 45th Street
New York, NY 10017
TEL: 212-687-9888 FAX: 646-487-5501

MEP ENGINEERS:
ICOR ASSOCIATES, LLC
485 C Route 1 South, Suite 200
Iseline, NJ 08830
TEL: 908-272-3300 FAX: 908-272-4440

GEOTECHNICAL ENGINEERS:
LANGAN ENGINEERING & ENVIRONMENTAL SERVICES
21 Penn Plaza - 360 West 31st Street, 8th Floor
New York, NY 10001
TEL: 212.479.5400 FAX: 212.479.5444

No.	DESCRIPTION:	DATE:
	CONCRETE BID PACKAGE	03-06-15
	ADDENDUM #3	03-27-15
	50% CONSTRUCTION DOCUMENTS	04-08-15
	ADDENDUM #4	04-24-15
	ADDENDUM #5	05-01-15
	ADDENDUM #10	07-22-15
	ISSUED FOR FILING	07-28-15
	80% CONSTRUCTION DOCUMENTS	08-14-15
	PRELIMINARY PRICING SET	09-21-15
	90% CONSTRUCTION DOCUMENTS	01-15-16
	ADDENDUM #16	02-04-16
	ASI #57	02-26-16
	ISSUE FOR CONSTRUCTION	03-18-16
1	ASI #61	05-06-16
2	ASI #64	05-13-16
	ISSUED FOR FILING	05-22-17

Discrepancies must be reported immediately to the Architect before proceeding. Only figured dimensions are to be used. Contractors must check all dimensions on site. This drawing is protected by copyright.

ALL DIMENSIONS ARE SHOWN IN IMPERIAL.

CONSULTANT: WSP

PROJECT:
252 SOUTH STREET
NEW YORK, NY

DRAWING TITLE:
SUPERSTRUCTURE SECTIONS 2

SEAL & SIGNATURE: STATE OF NEW YORK — AHMAD RAHIMIAN — No. 085057 — LICENSED PROFESSIONAL ENGINEER

DATE:	07/25/14
PROJECT No:	1302510
DRAWN: CADD	REV:
CHK: CL	
SCALE: N.T.S.	
DWG No:	S-971.02
DOB PAGE No:	of

DOB EMPLOYEE STAMP: Tina Mathew, RA — APPROVED Under Directive 2 of 1975 — AMENDED APPLICATION — Date: 10/23/2017 — NYC Development Hub

DOB B-SCAN:

FILE NAME:
PLOT DATE:

30" x 42" Arch E1 - SHEET SIZE

DEPT OF BLDGS121185038 Job Number

ES1085284431 Scan Code

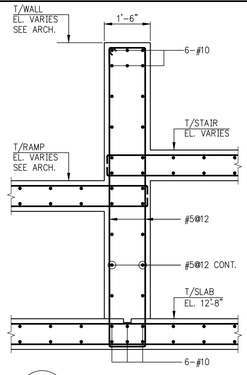

1 S-972 SECTION @ 1ST FLOOR
SCALE: ½"=1'-0"

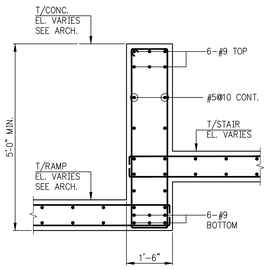

2 S-972 SECTION
SCALE: ½"=1'-0"

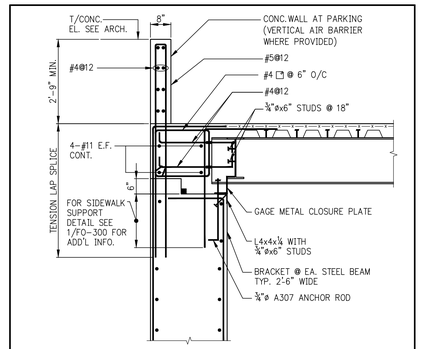

4 S-972 TYPICAL STEEL BEAM SUPPORT WITH PARAPET
SCALE: ½"=1'-0"

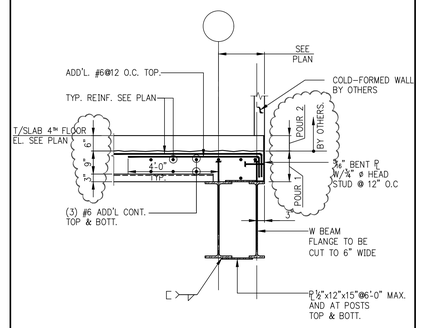

5 S-972 SECTION
SCALE: ½"=1'-0"

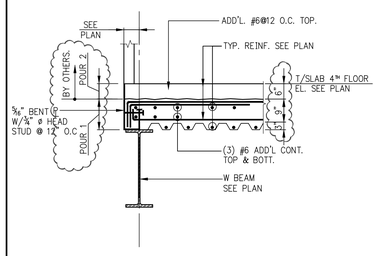

6 S-972 SECTION
SCALE: ½"=1'-0"

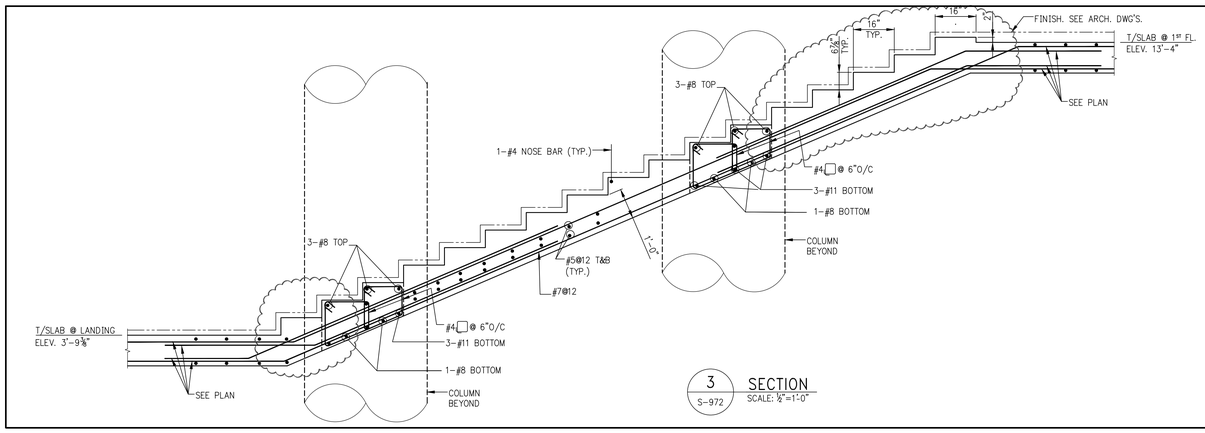

3 S-972 SECTION
SCALE: ½"=1'-0"

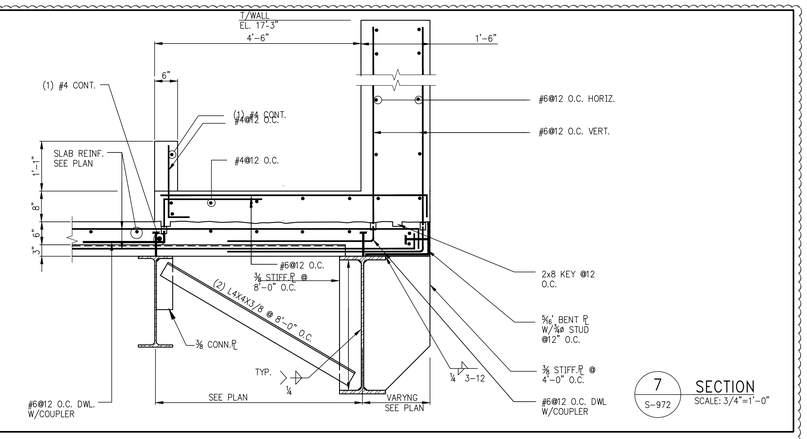

7 S-972 SECTION
SCALE: 3/4"=1'-0"

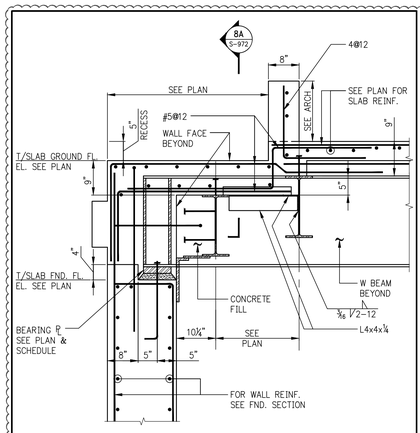

8 S-972 SECTION
SCALE: 3/4"=1'-0"

NOTES:
1. FOR BALANCE OF INFORMATION SEE TYPICAL STEEL BEAM SUPPORT ON FND WALL ON FO-300.

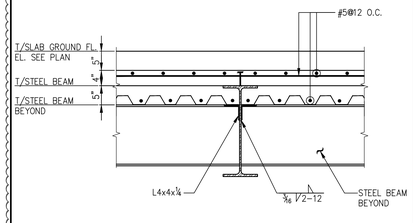

8A S-972 SECTION
SCALE: 3/4"=1'-0"

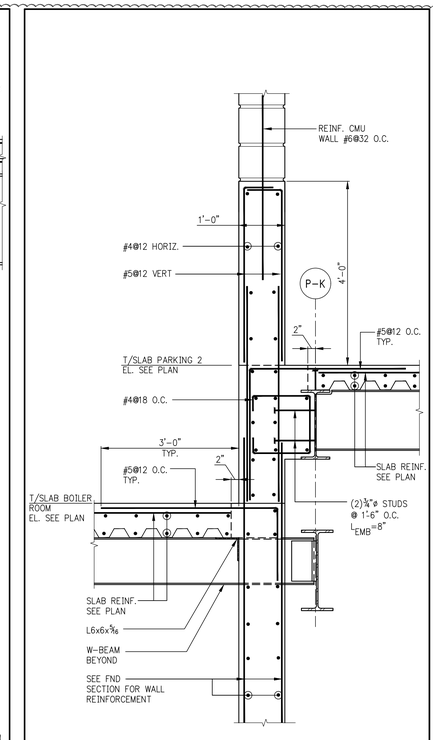

9 S-972 SECTION
SCALE: 3/4"=1'-0"

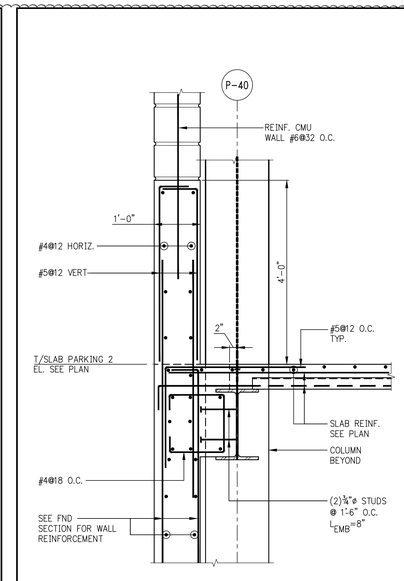

10 S-972 SECTION
SCALE: 3/4"=1'-0"

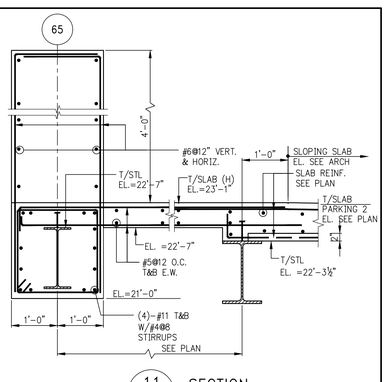

11 S-972 SECTION
SCALE: 3/4"=1'-0"

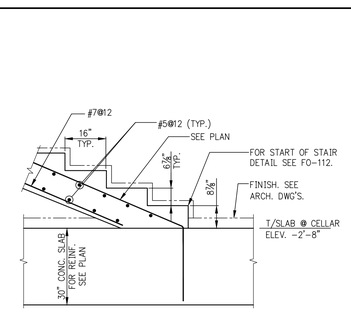

12 S-972 SECTION
SCALE: ½"=1'-0"

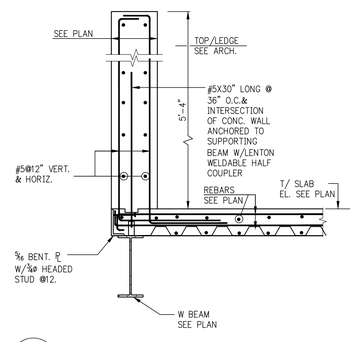

13 S-972 CONCRETE WALL ON COMPOSITE SLAB
SCALE: 3/4" = 1'-0"

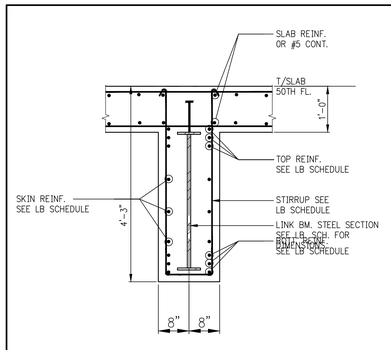

14 S-972 SECTION AT LB3 & LB11
SCALE: 3/4" = 1'-0"

FILE NAME:
PLOT DATE:

KEY PLAN:

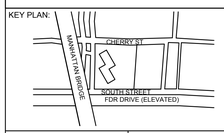

PROJECT NORTH

TRUE NORTH

DEVELOPER:
EXTELL DEVELOPMENT COMPANY
805 Third Ave, 7th Floor
New York, NY 10022
TEL: 212-712-6000 FAX: 212-712-6100

ARCHITECT OF RECORD:
AAI ARCHITECTS, P.C.
14 Wall Street, 2nd Floor
New York, NY 10005
TEL: 212-964-4040 FAX: 212-964-4090

INTERIOR DESIGNER:
MEYER DAVIS
180 Varick St, suite 404
New York, NY 10014
TEL: 212-627-5574

LANDSCAPE DESIGNER:
WEST 8 URBAN DESIGN & LANDSCAPE ARCHITECTURE P.C.
333 Hudson Street, Suite 905
New York, NY 10013
TEL: 212-285-0088 FAX: 212-285-0228

STRUCTURAL ENGINEERS:
WSP
228 East 45th Street
New York, NY 10017
TEL: 212-687-9888 FAX: 646-487-5501

MEP ENGINEERS:
ICOR ASSOCIATES, LLC
485 C Route 1 South, Suite 200
Iselin, NJ 08830
TEL: 908-272-3300 FAX: 908-272-4440

GEOTECHNICAL ENGINEERS:
LANGAN ENGINEERING & ENVIRONMENTAL SERVICES
21 Penn Plaza - 360 West 31st Street, 8th Floor
New York, NY 10001
TEL: 212.479.5400 FAX: 212.479.5444

No.	DESCRIPTION:	DATE:
	CONCRETE BID PACKAGE	03-06-15
	50% CONSTRUCTION DOCUMENTS	04-08-15
	ADDENDUM # 4	04-24-15
	ISSUED FOR FILING	07-28-15
	ADDENDUM #14	10-22-15
	90% CONSTRUCTION DOCUMENTS	01-15-16
	ADDENDUM #16	02-04-16
	ASI #57	02-26-16
	ISSUE FOR CONSTRUCTION	03-18-16
1	ASI #64	05-13-16
2	ASI #67	06-17-16
3	ASI #85	03-01-17
	ISSUED FILING	05-22-17

Discrepancies must be reported immediately to the Architect before proceeding. Only figured dimensions are to be used. Contractors must check all dimensions on site. This drawing is protected by copyright.

ALL DIMENSIONS ARE SHOWN IN IMPERIAL.

CONSULTANT: WSP

PROJECT:
252 SOUTH STREET
NEW YORK, NY

DRAWING TITLE:
SUPERSTRUCTURE
SECTIONS 3

SEAL & SIGNATURE:

DATE:	07/25/14
PROJECT No:	1302510
DRAWN: CADD	REV:
CHK: CL	
SCALE: N.T.S.	
DWG No:	**S-972.02**
DOB PAGE No:	of

DOB EMPLOYEE STAMP:

DOB B-SCAN:

DEPT OF BLDGS121185028 Job Number
E\S1806020969 Scan Code
30" x 42" Arch E1 - SHEET SIZE

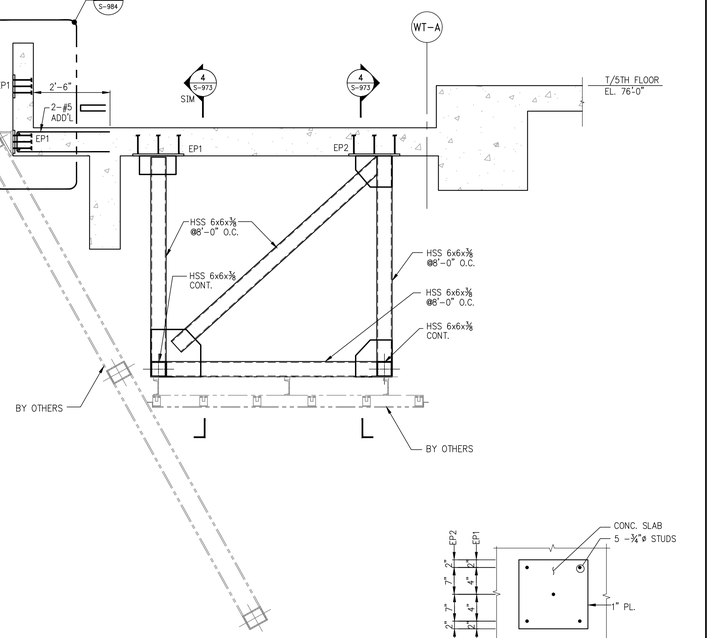

1 S-973 SECTION
SCALE: 1/2" = 1'-0"

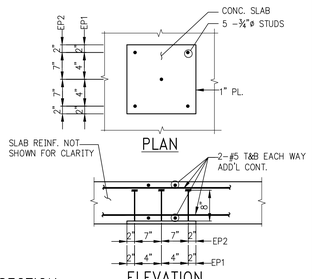

FOR LOCATION SEE ARCHITECTURAL DRAWINGS (TYP.)

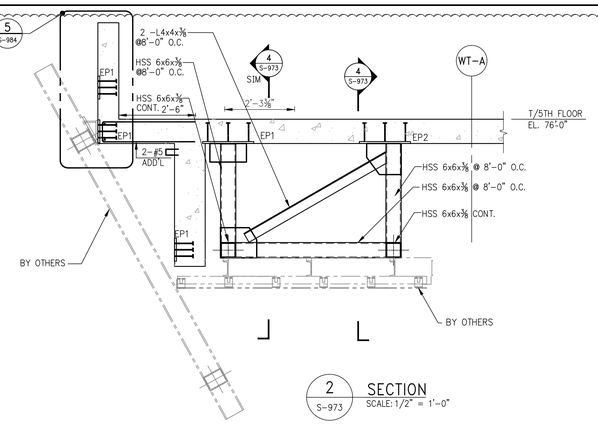

2 S-973 SECTION
SCALE: 1/2" = 1'-0"

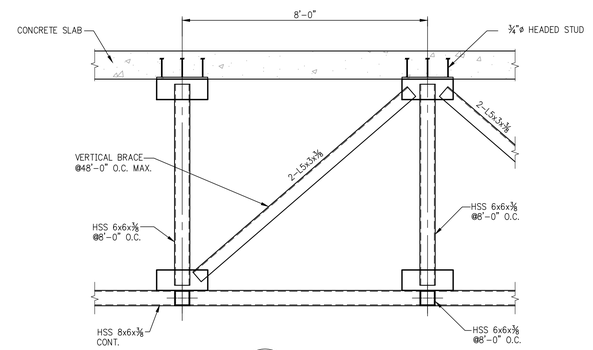

4 S-973 SECTION
SCALE: 1/2" = 1'-0"

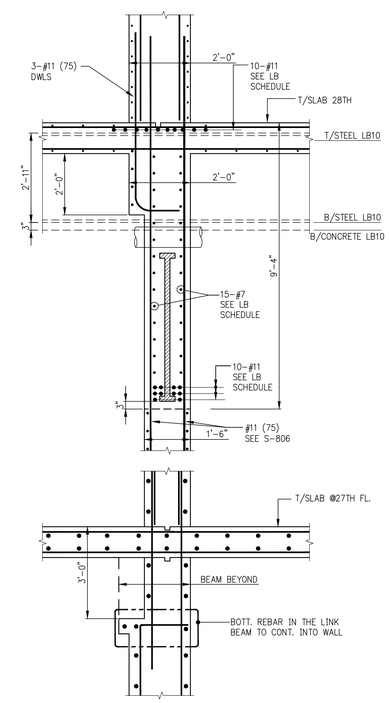

5 S-973 SECTION @ LB9
SCALE: 1/2" = 1'-0"

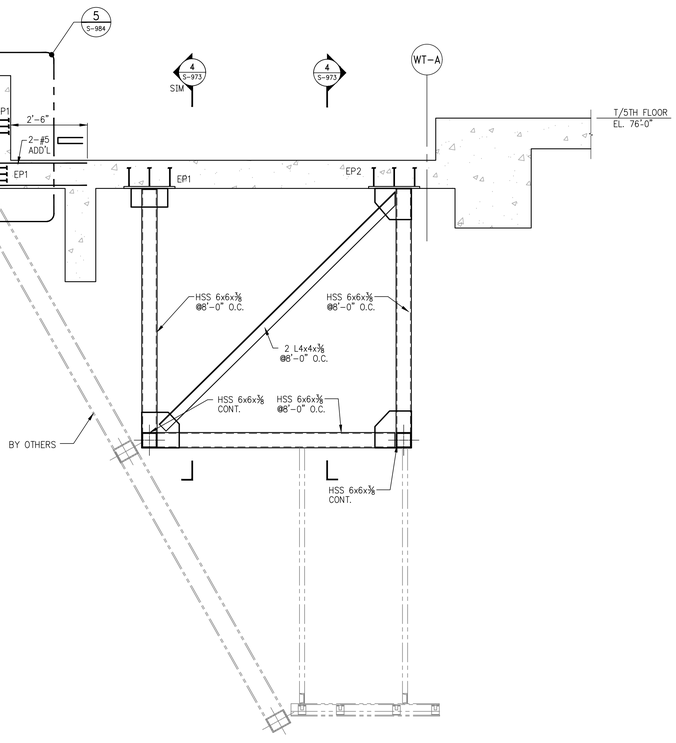

3 S-973 SECTION
SCALE: 1/2" = 1'-0"

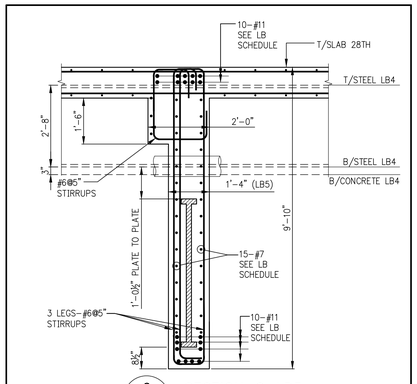

6 S-973 SECTION @ LB5
SCALE: 1/2" = 1'-0"

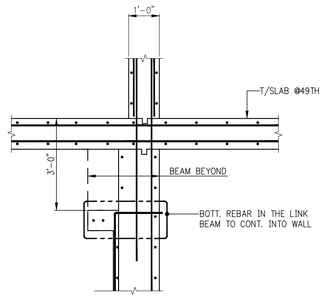

9 S-973 SECTION @ LB5
SCALE: 1/2" = 1'-0"

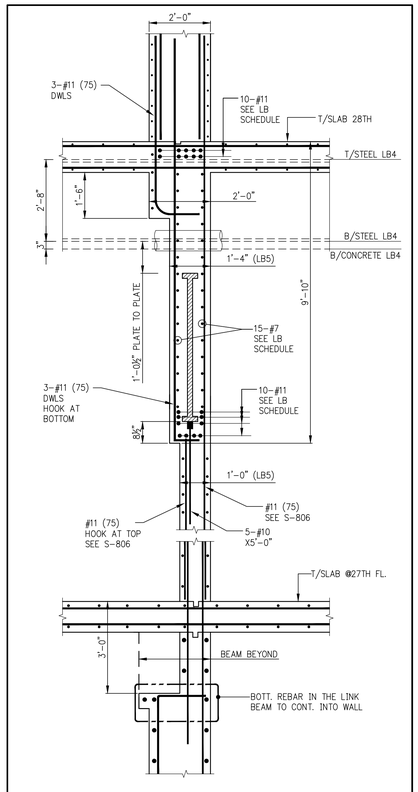

7 S-973 SECTION @ LB5
SCALE: 1/2" = 1'-0"

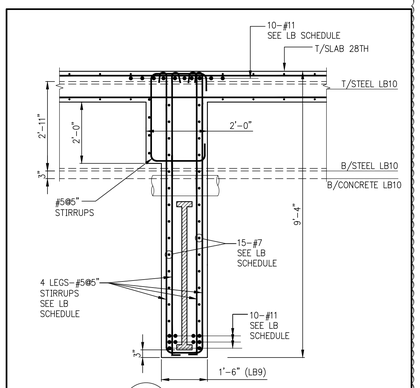

8 S-973 SECTION @ LB9
SCALE: 1/2" = 1'-0"

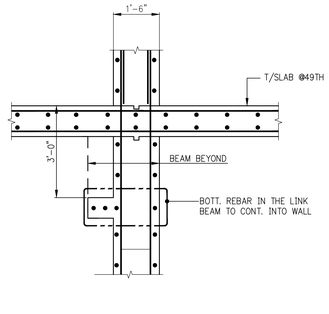

10 S-973 SECTION @ LB9
SCALE: 1/2" = 1'-0"

FILE NAME:
PLOT DATE:

PROJECT NORTH | TRUE NORTH

DEVELOPER:
EXTELL DEVELOPMENT COMPANY
805 Third Ave, 7th Floor
New York, NY 10022
TEL: 212-712-6000 FAX: 212-712-6100

ARCHITECT OF RECORD:
AAI ARCHITECTS, P.C.
14 Wall Street, 2nd Floor
New York, NY 10005
TEL: 212-964-4040 FAX: 212-964-4090

INTERIOR DESIGNER:
MEYER DAVIS
180 Varick St, suite 404
New York, NY 10014
TEL: 212-627-5574

LANDSCAPE DESIGNER:
WEST 8 URBAN DESIGN & LANDSCAPE ARCHITECTURE P.C.
333 Hudson Street, Suite 905
New York, NY 10013
TEL: 212-285-0088 FAX: 212-285-0228

STRUCTURAL ENGINEERS:
WSP
228 East 45th Street
New York, NY 10017
TEL: 212-687-9888 FAX: 646-487-5501

MEP ENGINEERS:
ICOR ASSOCIATES, LLC
485 C Route 1 South, Suite 200
Iselin, NJ 08830
TEL: 908-272-3300 FAX: 908-272-4440

GEOTECHNICAL ENGINEERS:
LANGAN ENGINEERING & ENVIRONMENTAL SERVICES
21 Penn Plaza - 360 West 31st Street, 8th Floor
New York, NY 10001
TEL: 212.479.5400 FAX: 212.479.5444

No.	DESCRIPTION:	DATE:
	50% CONSTRUCTION DOCUMENTS	04-08-15
	ISSUED FOR FILING	07-28-15
	ADDENDUM #14	10-22-15
	ISSUE FOR CONSTRUCTION	03-18-16
1	ASI #66	06-03-16
2	ASI #67	06-17-16
3	ASI #73	08-19-16
4	ASI #75	10-10-16
5	ASI #76	10-28-16
6	ASI #82	01-16-17
	ISSUED FILING	05-22-17

Discrepancies must be reported immediately to the Architect before proceeding. Only figured dimensions are to be used. Contractors must check all dimensions on site. This drawing is protected by copyright.

ALL DIMENSIONS ARE SHOWN IN IMPERIAL.

CONSULTANT: WSP

PROJECT:
252 SOUTH STREET
NEW YORK, NY

DRAWING TITLE:
SUPERSTRUCTURE
SECTIONS 4

SEAL & SIGNATURE:

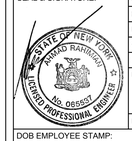

DATE:	07/25/14
PROJECT No:	1302510
DRAWN: CADD	REV:
CHK: CL	
SCALE: N.T.S.	

DWG No:
S-973.01

DOB PAGE No: of

DOB EMPLOYEE STAMP:

DOB B-SCAN:

DEPT OF BLDGS121305628 Job Number
E-5941305321 Scan Code

30" x 42" Arch E1 - SHEET SIZE

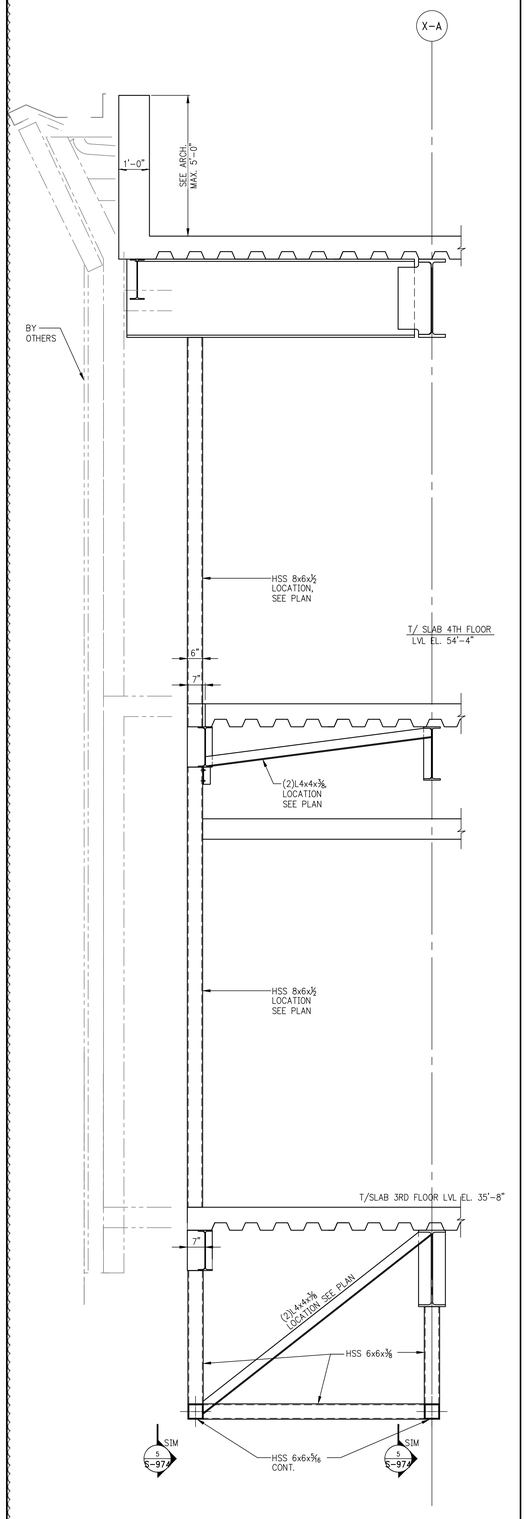

1 SECTION
S-974 SCALE: 1/2" = 1'-0"

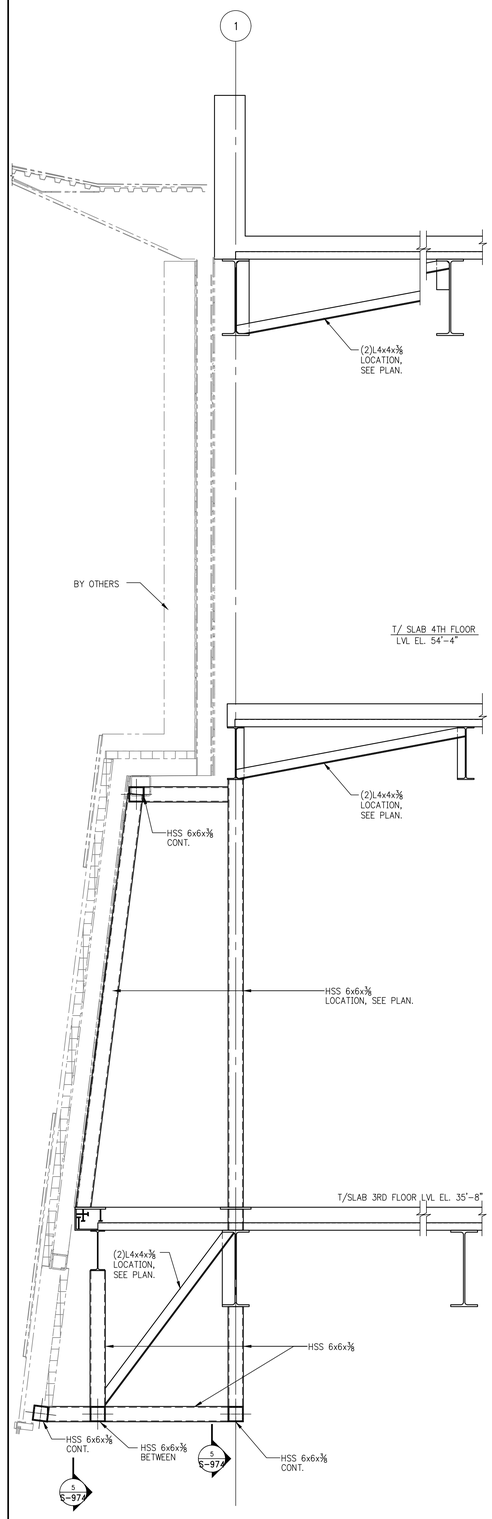

2 SECTION
S-974 SCALE: 1/2" = 1'-0"

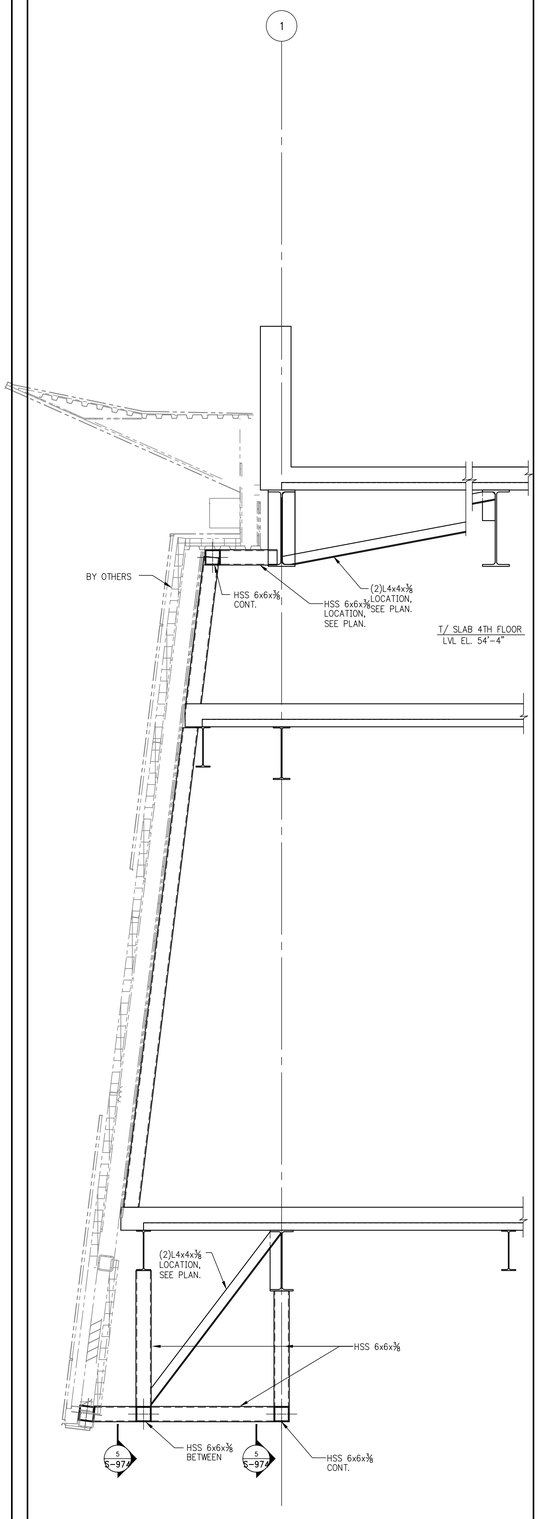

3 SECTION
S-974 SCALE: 1/2" = 1'-0"

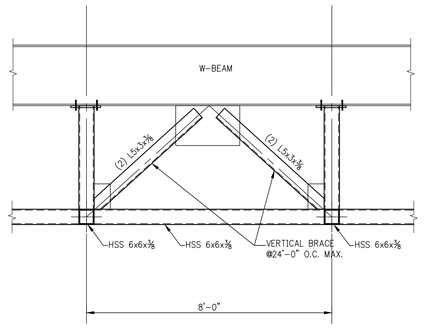

5 SECTION
S-974 SCALE: 1/2" = 1'-0"

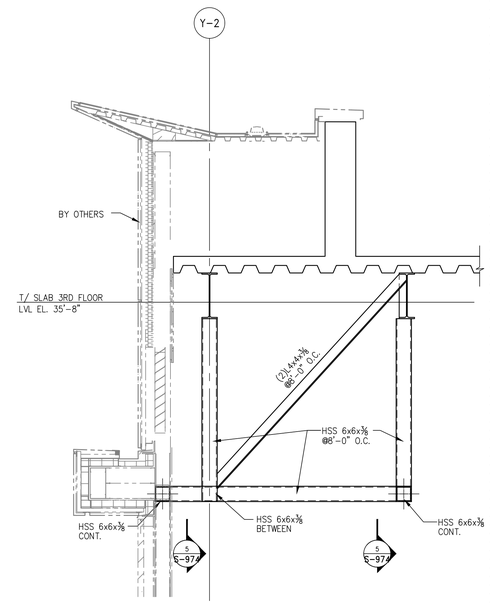

4 SECTION
S-974 SCALE: 1/2" = 1'-0"

KEY PLAN:

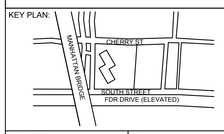

PROJECT NORTH | TRUE NORTH

DEVELOPER:
EXTELL DEVELOPMENT COMPANY
805 Third Ave, 7th Floor
New York, NY 10022
TEL: 212-712-6000 FAX: 212-712-6100

ARCHITECT OF RECORD:
AAI ARCHITECTS, P.C.
14 Wall Street, 2nd Floor
New York, NY 10005
TEL: 212-964-4040 FAX: 212-964-4090

INTERIOR DESIGNER:
MEYER DAVIS
180 Varick St, suite 404
New York, NY 10014
TEL: 212-627-5574

LANDSCAPE DESIGNER:
WEST 8 URBAN DESIGN & LANDSCAPE ARCHITECTURE P.C.
333 Hudson Street, Suite 905
New York, NY 10013
TEL: 212-285-0088 FAX: 212-285-0228

STRUCTURAL ENGINEERS:
WSP
228 East 45th Street
New York, NY 10017
TEL: 212-687-9888 FAX: 646-487-5501

MEP ENGINEERS:
ICOR ASSOCIATES, LLC
485 C Route 1 South, Suite 200
Iselin, NJ 08830
TEL: 908-272-3300 FAX: 908-272-4440

GEOTECHNICAL ENGINEERS:
LANGAN ENGINEERING & ENVIRONMENTAL SERVICES
21 Penn Plaza - 360 West 31st Street, 8th Floor
New York, NY 10001
TEL: 212.479.5400 FAX: 212.479.5444

No.	DESCRIPTION:	DATE:
	50% CONSTRUCTION DOCUMENTS	04-08-15
	ISSUED FOR FILING	07-28-15
	ADDENDUM #14	10-22-15
	ISSUE FOR CONSTRUCTION	03-18-16
1	ASI #75	10-10-16
	ISSUED FOR FILING	05-22-17

Discrepancies must be reported immediately to the Architect before proceeding. Only figured dimensions are to be used. Contractors must check all dimensions on site. This drawing is protected by copyright.

ALL DIMENSIONS ARE SHOWN IN IMPERIAL.

CONSULTANT: WSP

PROJECT:
252 SOUTH STREET
NEW YORK, NY

DRAWING TITLE:
SUPERSTRUCTURE
SECTIONS 5

SEAL & SIGNATURE:

DATE:	07/25/14
PROJECT No:	1302510
DRAWN: CADD	REV:
CHK: CL	
SCALE: N.T.S.	
DWG No:	**S-974.01**
DOB PAGE No:	of

DOB EMPLOYEE STAMP:

Tina Mathew, RA
APPROVED
Under Directive 2 of 1975
AMENDED APPLICATION
Date: 10/23/2017
NYC Development Hub

DOB B-SCAN:

FILE NAME:
PLOT DATE:

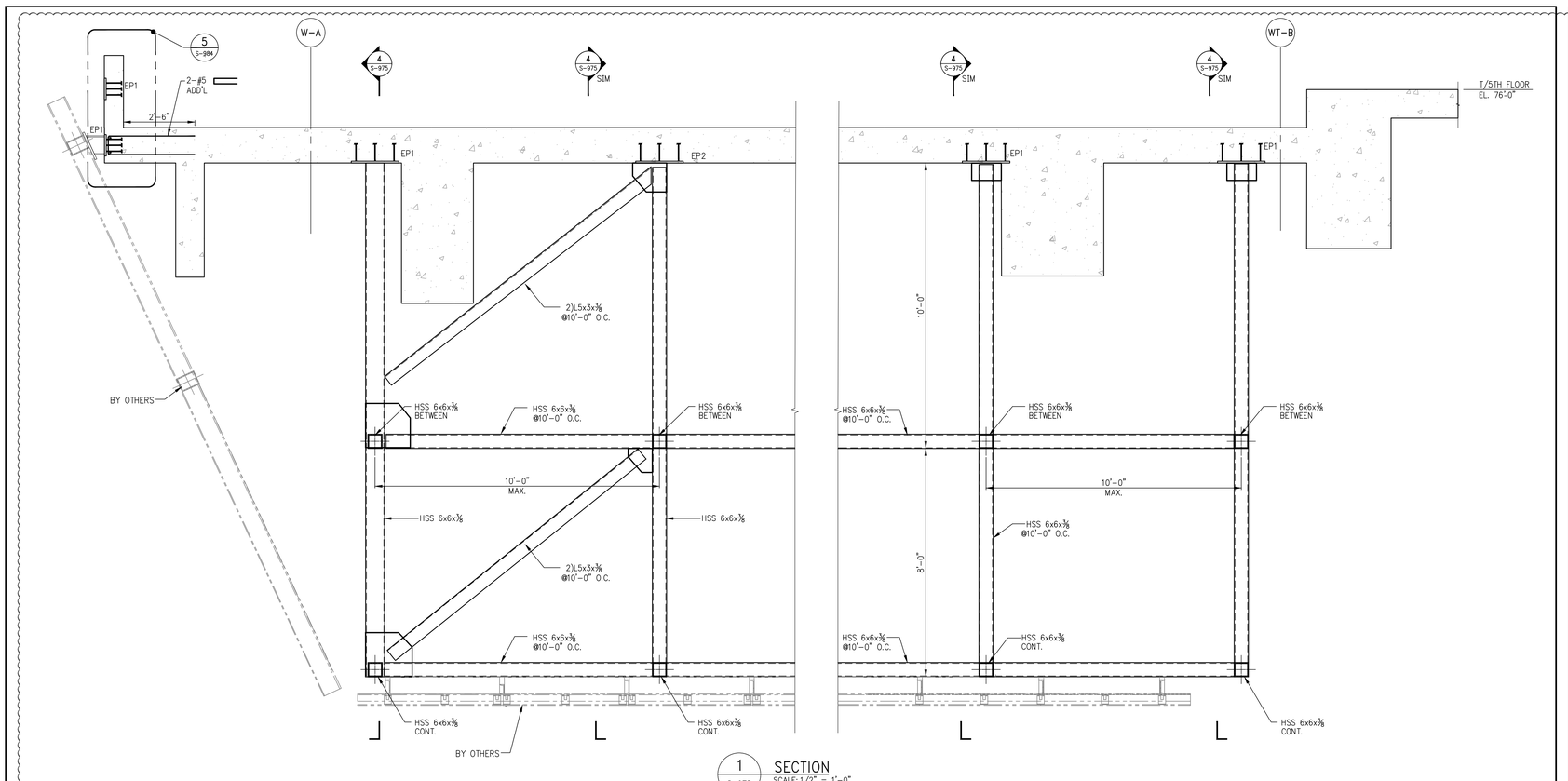

1 S-975 SECTION
SCALE: 1/2" = 1'-0"

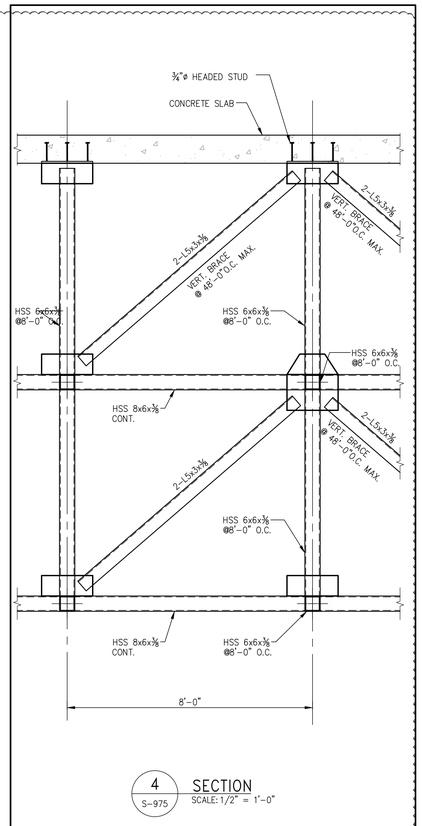

4 S-975 SECTION
SCALE: 1/2" = 1'-0"

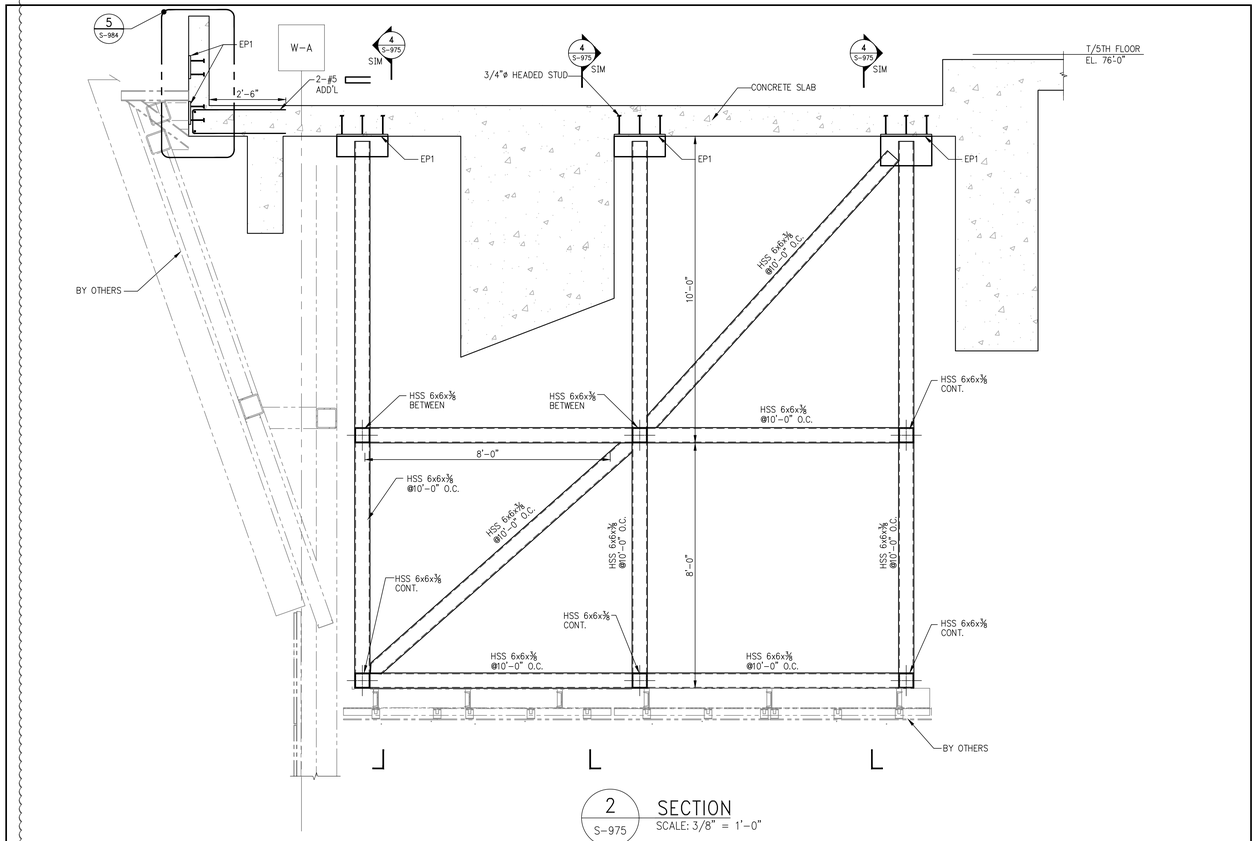

2 S-975 SECTION
SCALE: 3/8" = 1'-0"

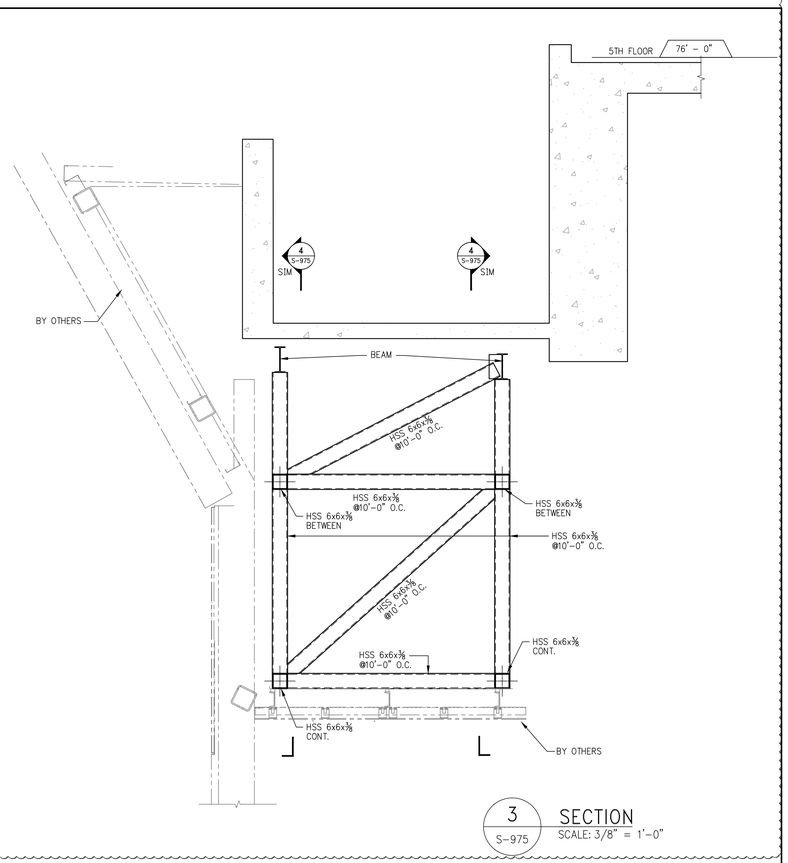

3 S-975 SECTION
SCALE: 3/8" = 1'-0"

KEY PLAN:

PROJECT NORTH | TRUE NORTH

DEVELOPER:
EXTELL DEVELOPMENT COMPANY
805 Third Ave, 7th Floor
New York, NY 10022
TEL: 212-712-6000 FAX: 212-712-6100

ARCHITECT OF RECORD:
AAI ARCHITECTS, P.C.
14 Wall Street, 2nd Floor
New York, NY 10005
TEL: 212-964-4040 FAX: 212-964-4090

INTERIOR DESIGNER:
MEYER DAVIS
180 Varick St, suite 404
New York, NY 10014
TEL: 212-627-5574

LANDSCAPE DESIGNER:
WEST 8 URBAN DESIGN & LANDSCAPE ARCHITECTURE P.C.
333 Hudson Street, Suite 905
New York, NY 10013
TEL: 212-285-0088 FAX: 212-285-0228

STRUCTURAL ENGINEERS:
WSP
228 East 45th Street
New York, NY 10017
TEL: 212-687-9888 FAX: 646-487-5501

MEP ENGINEERS:
ICOR ASSOCIATES, LLC
485 C Route 1 South, Suite 200
Iseline, NJ 08830
TEL: 908-272-3300 FAX: 908-272-4440

GEOTECHNICAL ENGINEERS:
LANGAN ENGINEERING & ENVIRONMENTAL SERVICES
21 Penn Plaza - 360 West 31st Street, 8th Floor
New York, NY 10001
TEL: 212.479.5400 FAX: 212.479.5444

No.	DESCRIPTION:	DATE:
	50% CONSTRUCTION DOCUMENTS	04-08-15
	ISSUED FOR FILING	07-28-15
	ADDENDUM #14	10-22-15
	ISSUE FOR CONSTRUCTION	03-18-16
1	ASI #66	06-03-16
2	ASI #67	06-17-16
	ISSUED FOR FILING	05-22-17

Discrepancies must be reported immediately to the Architect before proceeding. Only figured dimensions are to be used. Contractors must check all dimensions on site. This drawing is protected by copyright.

ALL DIMENSIONS ARE SHOWN IN IMPERIAL.

CONSULTANT:
WSP

PROJECT:
252 SOUTH STREET
NEW YORK, NY

DRAWING TITLE:
SUPERSTRUCTURE
SECTIONS 6

SEAL & SIGNATURE:
STATE OF NEW YORK · AHMAD RAHIMIAN · No. 065537 · LICENSED PROFESSIONAL ENGINEER

DATE:	07/25/14
PROJECT No:	1302510
DRAWN: CADD	REV:
CHK: CL	
SCALE: N.T.S.	
DWG No:	S-975.01
DOB PAGE No:	of

DOB EMPLOYEE STAMP:
Tina Mathew, RA
APPROVED
Under Directive 2 of 1975
AMENDED APPLICATION
Date: 10/23/2017
NYC Development Hub

DOB B-SCAN:

30" x 42" Arch E1 - SHEET SIZE
FILE NAME:
PLOT DATE:

DEPT OF BLDGS 121105439 Job Number
E1310962691 Scan Code
30" x 42" Arch E1 - SHEET SIZE

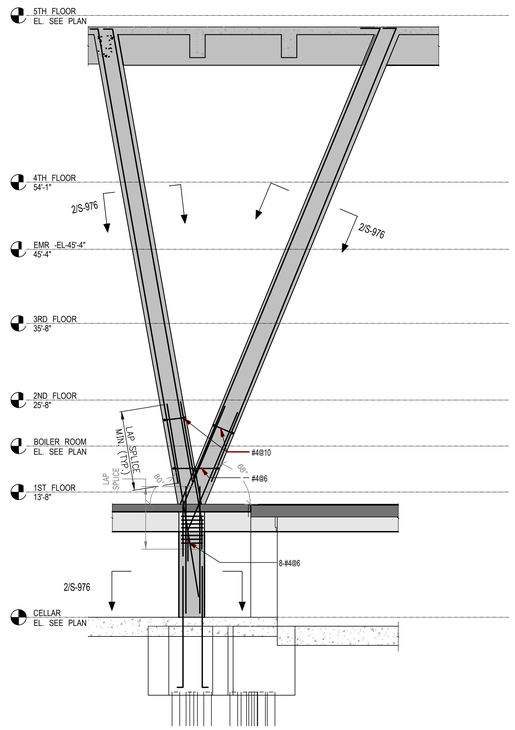

1 S-976 SECTION
SCALE: 1/8" = 1'-0"

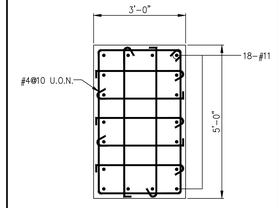

2 S-976 SECTION
SCALE: 1/2" = 1'-0"

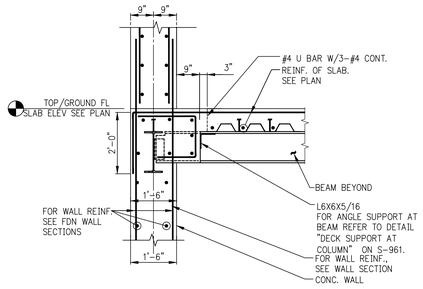

3 S-976 SECTION
SCALE: 1/2" = 1'-0"

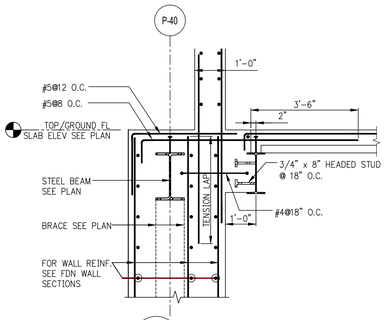

4 S-976 SECTION
SCALE: 1/2" = 1'-0"

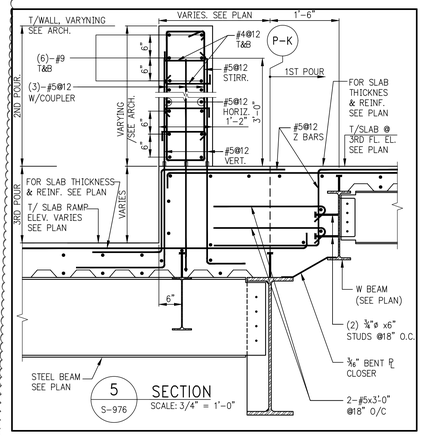

5 S-976 SECTION
SCALE: 3/4" = 1'-0"

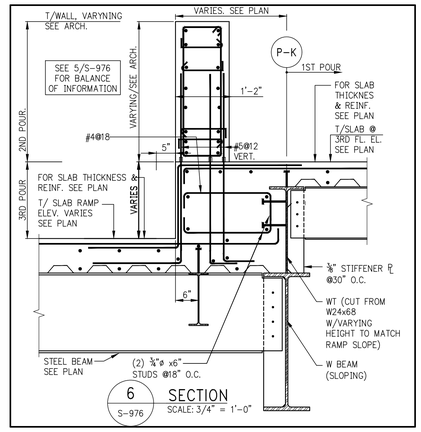

6 S-976 SECTION
SCALE: 3/4" = 1'-0"

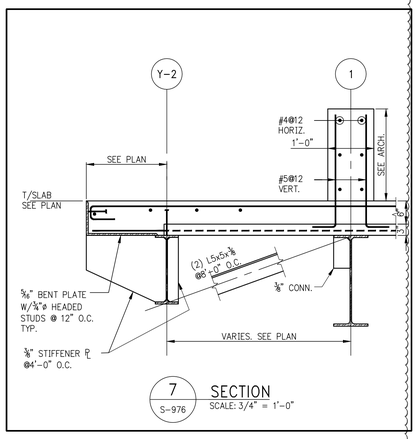

7 S-976 SECTION
SCALE: 3/4" = 1'-0"

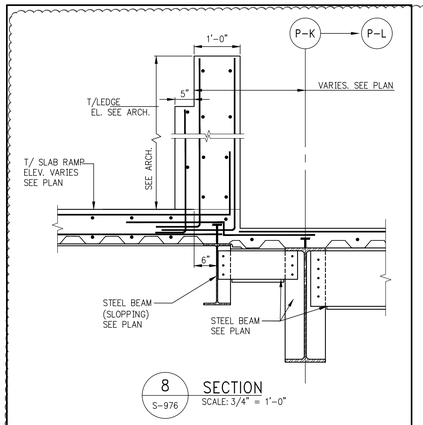

8 S-976 SECTION
SCALE: 3/4" = 1'-0"

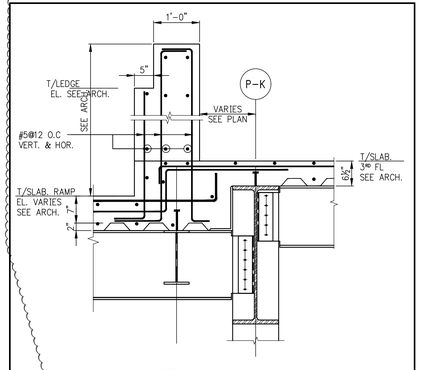

9 S-976 SECTION
SCALE: 3/4" = 1'-0"

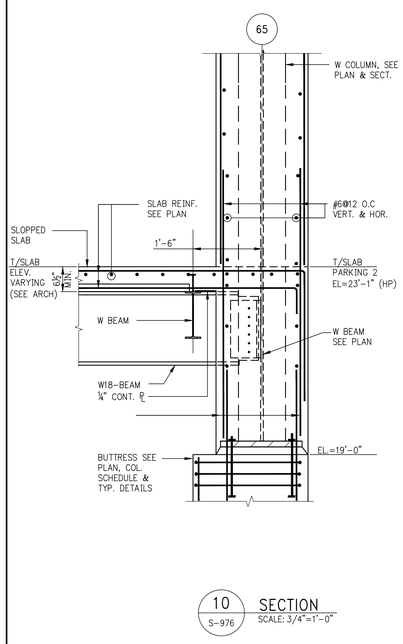

10 S-976 SECTION
SCALE: 3/4"=1'-0"

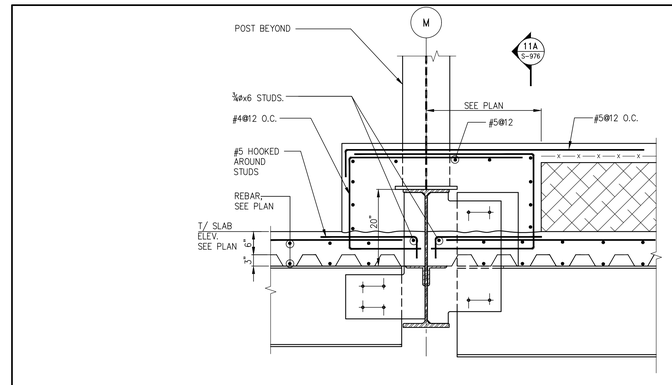

11 S-976 SECTION
SCALE: 3/4"=1'-0"

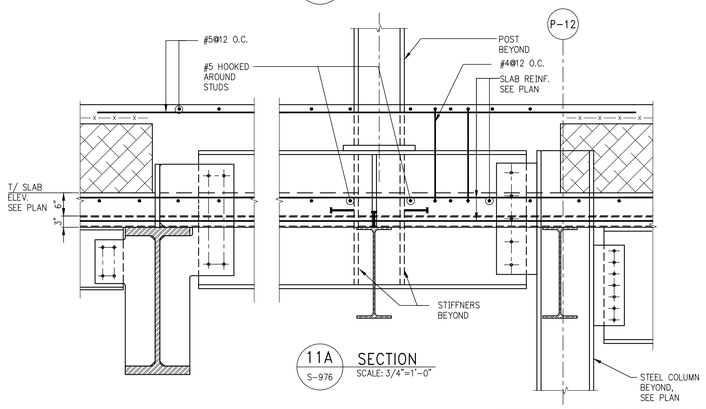

11A S-976 SECTION
SCALE: 3/4"=1'-0"

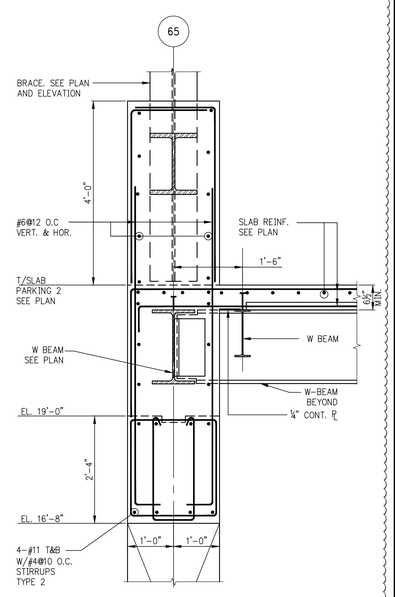

12 S-976 SECTION
SCALE: 3/4"=1'-0"

FILE NAME:
PLOT DATE:

KEY PLAN:

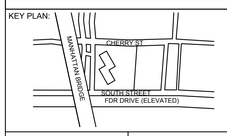

PROJECT NORTH | TRUE NORTH

DEVELOPER:
EXTELL DEVELOPMENT COMPANY
805 Third Ave, 7th Floor
New York, NY 10022
TEL: 212-712-6000 FAX: 212-712-6100

ARCHITECT OF RECORD:
AAI ARCHITECTS, P.C.
14 Wall Street, 2nd Floor
New York, NY 10005
TEL: 212-964-4040 FAX: 212-964-4090

INTERIOR DESIGNER:
MEYER DAVIS
180 Varick St, suite 404
New York, NY 10014
TEL: 212-627-5574

LANDSCAPE DESIGNER:
WEST 8 URBAN DESIGN & LANDSCAPE ARCHITECTURE P.C.
333 Hudson Street, Suite 905
New York, NY 10013
TEL: 212-285-0088 FAX: 212-285-0228

STRUCTURAL ENGINEERS:
WSP
228 East 45th Street
New York, NY 10017
TEL: 212-687-9888 FAX: 646-487-5501

MEP ENGINEERS:
ICOR ASSOCIATES, LLC
485 C Route 1 South, Suite 200
Iselin, NJ 08830
TEL: 908-272-3300 FAX: 908-272-4440

GEOTECHNICAL ENGINEERS:
LANGAN ENGINEERING & ENVIRONMENTAL SERVICES
21 Penn Plaza - 360 West 31st Street, 8th Floor
New York, NY 10001
TEL: 212.479.5400 FAX: 212.479.5444

No.	DESCRIPTION:	DATE:
	CONCRETE BID PACKAGE	03-06-15
	ADDENDUM #5	05-01-15
	ISSUED FOR FILING	07-28-15
	80% CONSTRUCTION DOCUMENTS	08-14-15
	ASI #13	08-26-15
	ADDENDUM #15	11-18-15
	90% CONSTRUCTION DOCUMENTS	01-15-16
	ADDENDUM #16	02-04-16
	ISSUE FOR CONSTRUCTION	03-18-16
1	ASI #80	12-09-16
	ISSUED FOR FILING	05-22-17

Discrepancies must be reported immediately to the Architect before proceeding. Only figured dimensions are to be used. Contractors must check all dimensions on site. This drawing is protected by copyright.

ALL DIMENSIONS ARE SHOWN IN IMPERIAL.

CONSULTANT: WSP

PROJECT:
252 SOUTH STREET
NEW YORK, NY

DRAWING TITLE:
SUPERSTRUCTURE
SECTIONS 7

SEAL & SIGNATURE:

DATE:	07/25/14
PROJECT No:	1302510
DRAWN: CADD	REV:
CHK: CL	
SCALE: N.T.S.	
DWG No:	**S-976.01**
DOB PAGE No:	of

DOB EMPLOYEE STAMP:

DOB B-SCAN:

DEPT OF BLDGS121180569 Job Number
ES-39142050 Scan Code

30" x 42" Arch E1 - SHEET SIZE

NOT USED

1 / S-977 DETAIL
SCALE: ½"=1'-0"

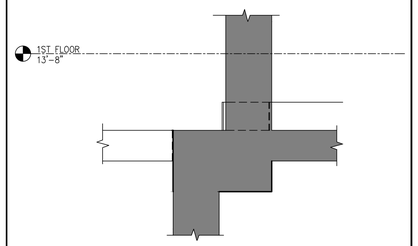

2 / S-977 SECTION CORNER RAMP CROSS
SCALE: ½"=1'-0"

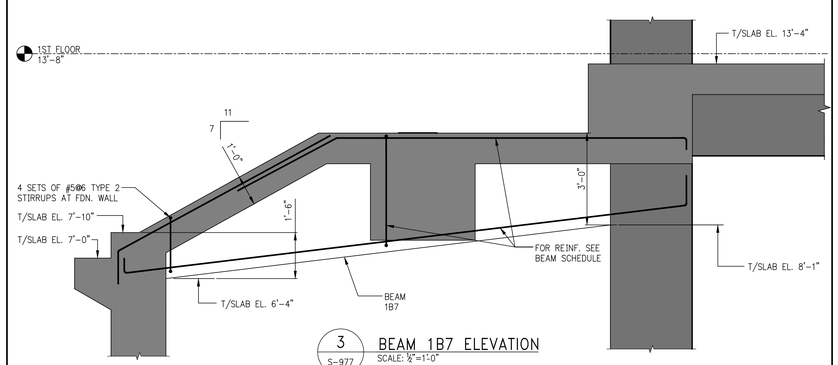

3 / S-977 BEAM 1B7 ELEVATION
SCALE: ½"=1'-0"

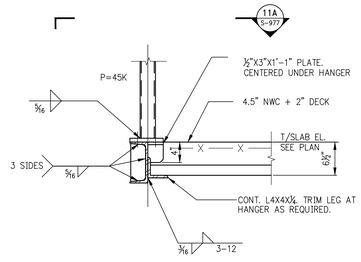

11 / S-977 SECTION
SCALE: 1"=1'-0"

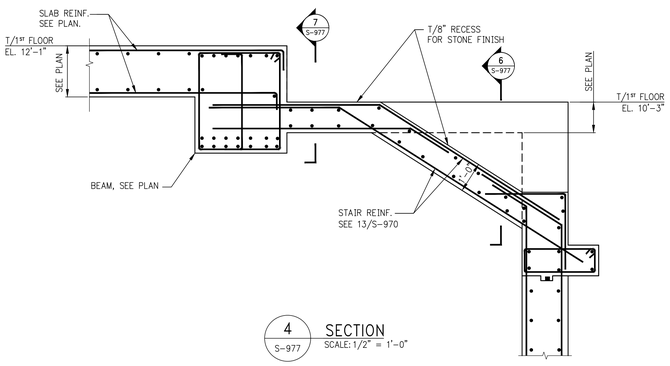

4 / S-977 SECTION
SCALE: 1/2" = 1'-0"

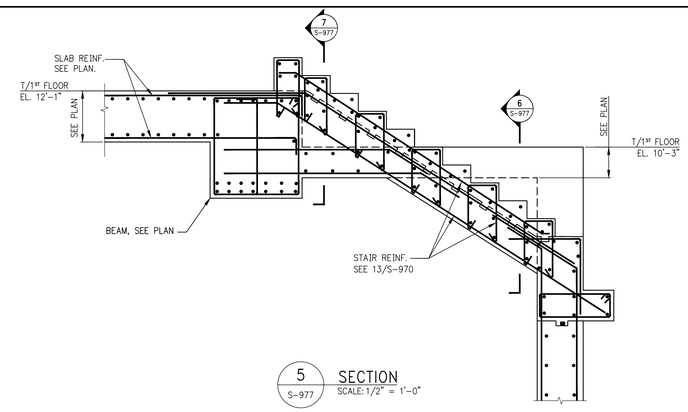

5 / S-977 SECTION
SCALE: 1/2" = 1'-0"

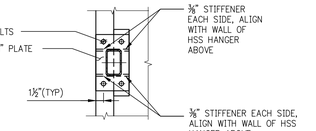

11A / S-977 SECTION
SCALE: 1"=1'-0"

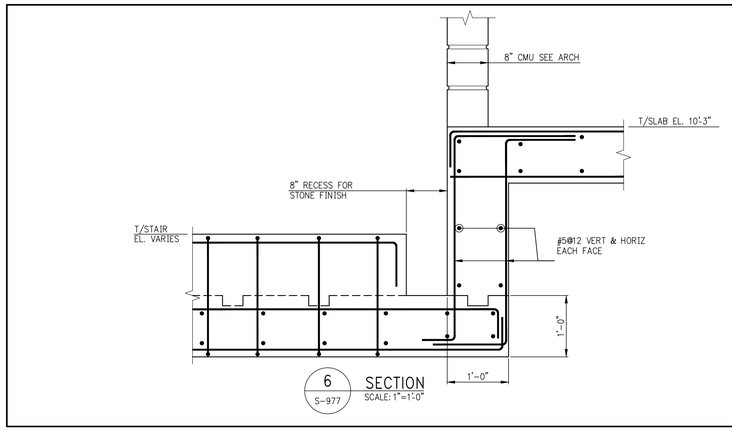

6 / S-977 SECTION
SCALE: 1"=1'-0"

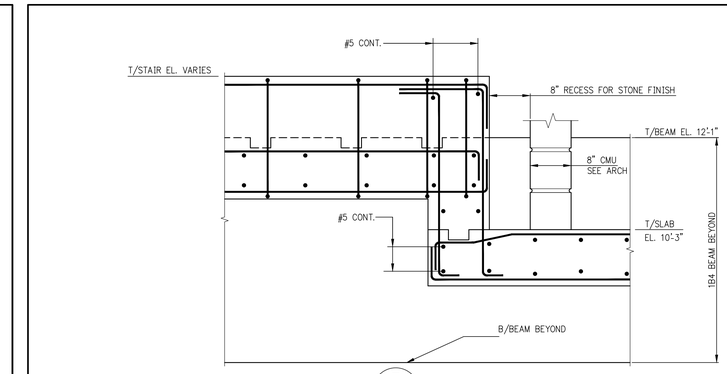

7 / S-977 SECTION
SCALE: 1"=1'-0"

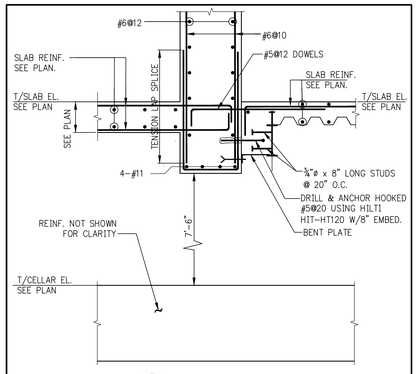

12 / S-977 SECTION
SCALE: 1/2" = 1'-0"

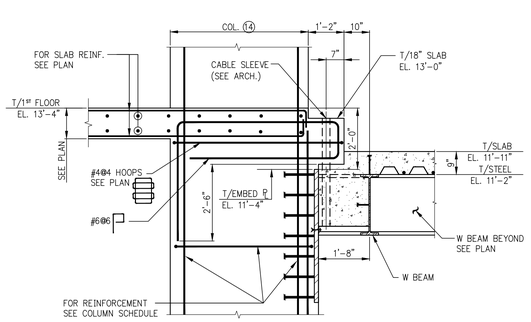

8 / S-977 SECTION
SCALE: 1/2"=1'-0"

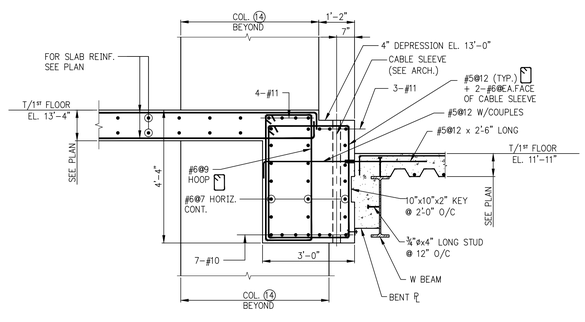

9 / S-977 SECTION
SCALE: 1/2"=1'-0"

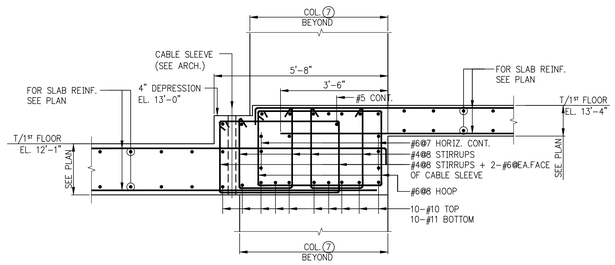

10 / S-977 SECTION
SCALE: 1/2"=1'-0"

FILE NAME:
PLOT DATE:

KEY PLAN:

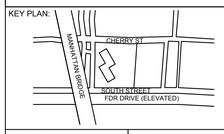

PROJECT NORTH | TRUE NORTH

DEVELOPER:
EXTELL DEVELOPMENT COMPANY
805 Third Ave, 7th Floor
New York, NY 10022
TEL: 212-712-6000 FAX: 212-712-6100

ARCHITECT OF RECORD:
AAI ARCHITECTS, P.C.
14 Wall Street, 2nd Floor
New York, NY 10005
TEL: 212-964-4040 FAX: 212-964-4090

INTERIOR DESIGNER:
MEYER DAVIS
180 Varick St, suite 404
New York, NY 10014
TEL: 212-627-5574

LANDSCAPE DESIGNER:
WEST 8 URBAN DESIGN & LANDSCAPE ARCHITECTURE P.C.
333 Hudson Street, Suite 905
New York, NY 10013
TEL: 212-285-0088 FAX: 212-285-0228

STRUCTURAL ENGINEERS:
WSP
228 East 45th Street
New York, NY 10017
TEL: 212-687-9888 FAX: 646-487-5501

MEP ENGINEERS:
ICOR ASSOCIATES, LLC
485 C Route 1 South, Suite 200
Iselin, NJ 08830
TEL: 908-272-3300 FAX: 908-272-4440

GEOTECHNICAL ENGINEERS:
LANGAN ENGINEERING & ENVIRONMENTAL SERVICES
21 Penn Plaza - 360 West 31st Street, 8th Floor
New York, NY 10001
TEL: 212.479.5400 FAX: 212.479.5444

No.	DESCRIPTION:	DATE:
	80% CONSTRUCTION DOCUMENTS	08-14-15
	ADDENDUM #15	11-18-15
	90% CONSTRUCTION DOCUMENTS	01-15-16
	ADDENDUM #16	02-04-16
	ASI #55	02-12-16
	ISSUE FOR CONSTRUCTION	03-18-16
1	ASI #61	04-22-16
2	ASI #62	04-29-16
	ISSUED FOR FILING	05-22-17

Discrepancies must be reported immediately to the Architect before proceeding. Only figured dimensions are to be used. Contractors must check all dimensions on site. This drawing is protected by copyright.

ALL DIMENSIONS ARE SHOWN IN IMPERIAL.

CONSULTANT: WSP

PROJECT:
252 SOUTH STREET
NEW YORK, NY

DRAWING TITLE:
SUPERSTRUCTURE SECTIONS 8

SEAL & SIGNATURE:
STATE OF NEW YORK · ARMAD RAMTOHAL · No. 065507 · LICENSED PROFESSIONAL ENGINEER

DATE:	07/25/14
PROJECT No:	1302510
DRAWN: CADD	REV:
CHK: CL	
SCALE: N.T.S.	
DWG No:	S-977.00
DOB PAGE No:	of

DOB EMPLOYEE STAMP:
Tina Mathew, RA
APPROVED
Under Directive 2 of 1975
AMENDED APPLICATION
Date: 10/23/2017
NYC Development Hub

DOB B-SCAN:

DEPT OF BLDGS121185539 Job Number
E:\SIDS\120714 Scan Code
30" x 42" Arch E1 SHEET SIZE

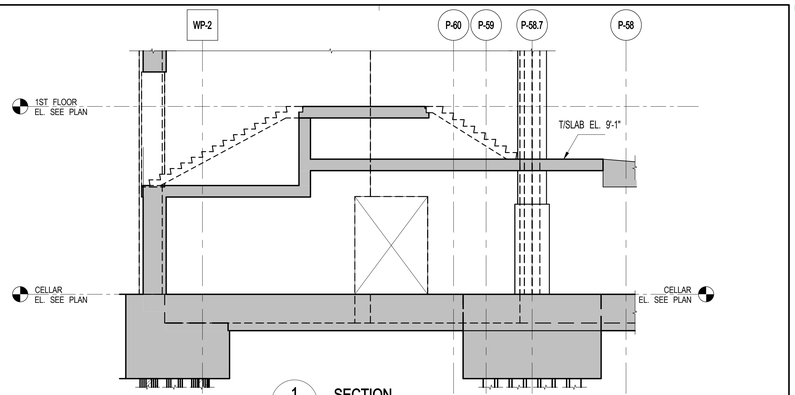

1 S-978 **SECTION**
SCALE: 3/16" = 1'-0"

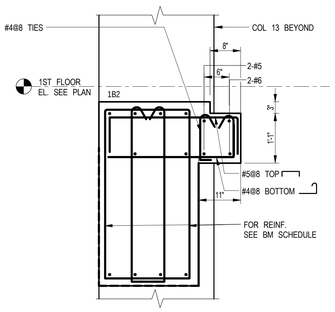

2 S-978 **SECTION**
SCALE: 3/4" = 1'-0"

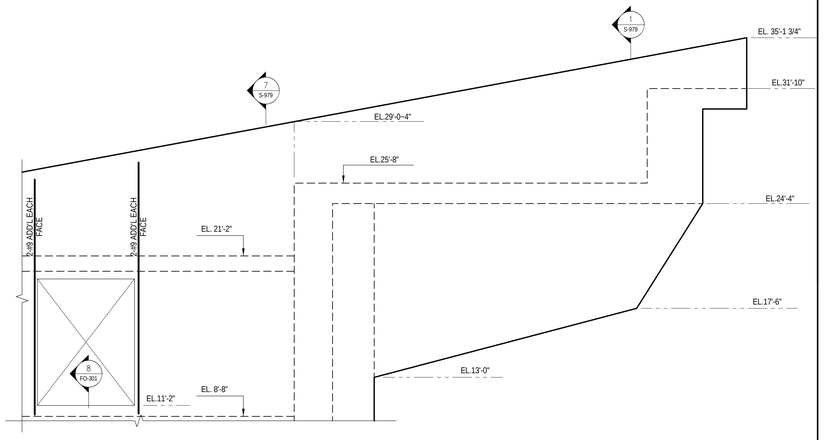

4 S-978 **ELEVATION**
SCALE: 1/4" = 1'-0"

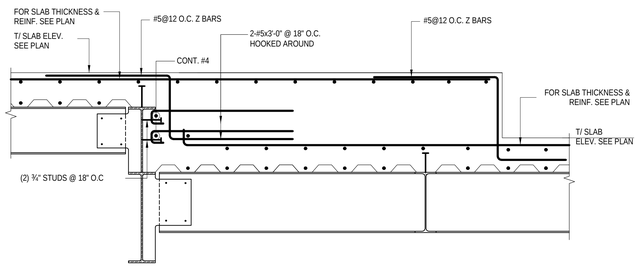

5 S-978 **SECTION**
SCALE: 3/4" = 1'-0"

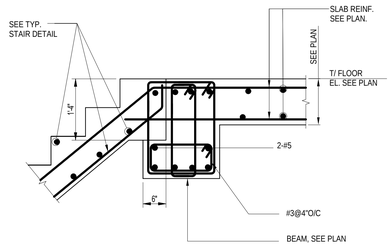

3 S-978 **SECTION**
SCALE: 3/4" = 1'-0"

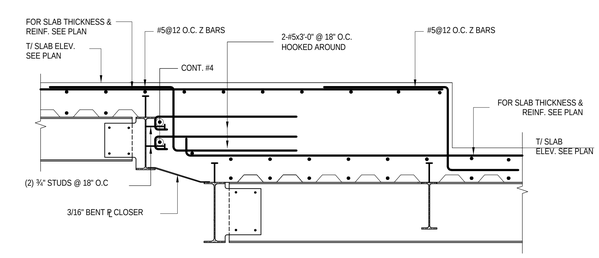

6 S-978 **SECTION**
SCALE: 3/4" = 1'-0"

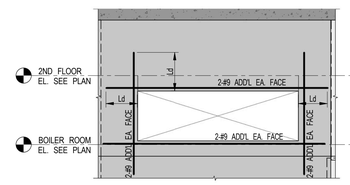

7 S-978 **ELEVATION**
SCALE: 3/16" = 1'-0"

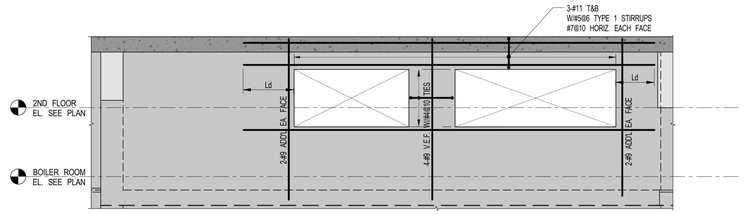

8 S-978 **ELEVATION**
SCALE: 3/16" = 1'-0"

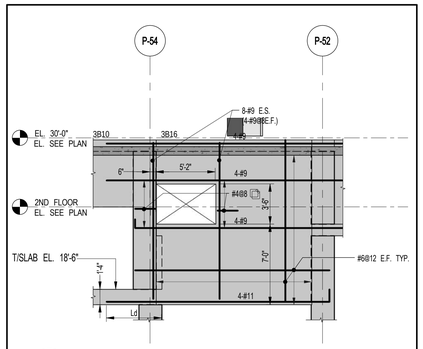

9 S-978 **3B16 ELEVATION-BOILER-U/S 3RD FLOOR**
SCALE: 3/16" = 1'-0"

NOTE:
TRUSS SUPPORTED BY BEAM NOT SHOWN FOR CLARITY

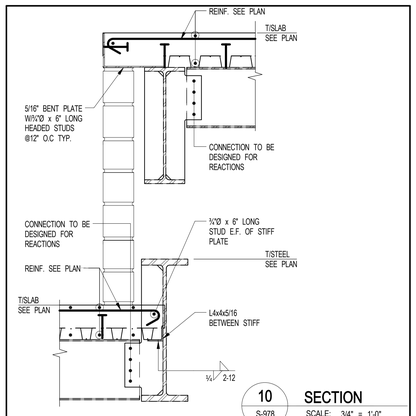

10 S-978 **SECTION**
SCALE: 3/4" = 1'-0"

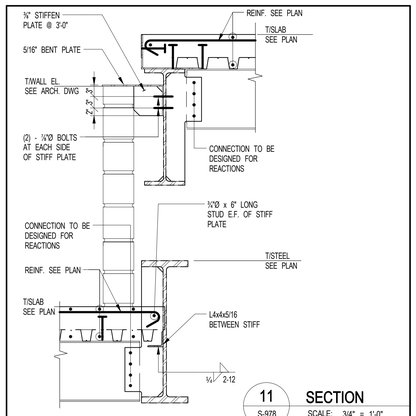

11 S-978 **SECTION**
SCALE: 3/4" = 1'-0"

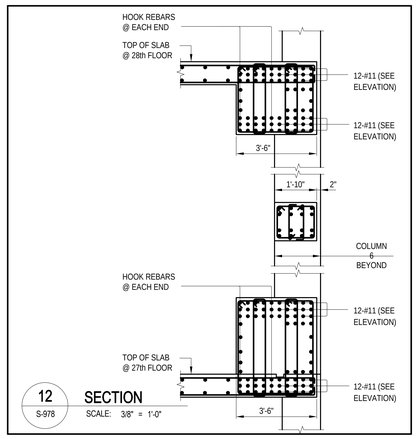

12 S-978 **SECTION**
SCALE: 3/8" = 1'-0"

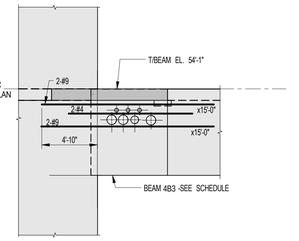

13 S-978 **SECTION**
SCALE: 3/16" = 1'-0"

FILE NAME:
PLOT DATE:

KEY PLAN:

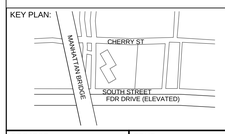

PROJECT NORTH

TRUE NORTH

DEVELOPER:
EXTELL DEVELOPMENT COMPANY
805 Third Ave, 7th Floor
New York, NY 10022
TEL: 212-712-6000 FAX: 212-712-6100

ARCHITECT OF RECORD:
AAI ARCHITECTS, P.C.
14 Wall Street, 2nd Floor
New York, NY 10005
TEL: 212-964-4040 FAX: 212-964-4090

INTERIOR DESIGNER:
MEYER DAVIS
180 Varick St, suite 404
New York, NY 10014
TEL: 212-627-5574

LANDSCAPE DESIGNER:
WEST 8 URBAN DESIGN & LANDSCAPE ARCHITECTURE P.C.
333 Hudson Street, Suite 905
New York, NY 10013
TEL: 212-285-0088 FAX: 212-285-0228

STRUCTURAL ENGINEERS:
WSP
228 East 45th Street
New York, NY 10017
TEL: 212-687-9888 FAX: 646-487-5501

MEP ENGINEERS:
ICOR ASSOCIATES, LLC
485 C Route 1 South, Suite 200
Iselin, NJ 08830
TEL: 908-272-3300 FAX: 908-272-4440

GEOTECHNICAL ENGINEERS:
LANGAN ENGINEERING & ENVIRONMENTAL SERVICES
21 Penn Plaza - 360 West 31st Street, 8th Floor
New York, NY 10001
TEL: 212.479.5400 FAX: 212.479.5444

No.	DESCRIPTION:	DATE:
	90% CONSTRUCTION DOCUMENTS	01-15-16
	ADDENDUM #16	02-04-16
	ASI #54	02-08-16
	ASI #55	02-12-16
	ASI #56	02-19-16
	ASI #57	02-26-16
	ASI #58	03-04-16
	ISSUE FOR CONSTRUCTION	03-18-16
1	ASI#61	04-22-16
	ISSUED FOR FILING	05-22-17

Discrepancies must be reported immediately to the Architect before proceeding. Only figured dimensions are to be used. Contractors must check all dimensions on site. This drawing is protected by copyright.

ALL DIMENSIONS ARE SHOWN IN IMPERIAL.

CONSULTANT:
WSP

PROJECT:
252 SOUTH STREET
NEW YORK, NY

DRAWING TITLE:
SUPERSTRUCTURE SECTIONS 9

SEAL & SIGNATURE:
STATE OF NEW YORK · AHMAD RASHIDIAN · No. 085857 · LICENSED PROFESSIONAL ENGINEER

DATE: 01/13/16
PROJECT No: 1302510
DRAWN: CAD REV:
CHK: CL
SCALE: As indicated
DWG No: **S-978.00**
DOB PAGE No: of

DOB EMPLOYEE STAMP:
Tina Mathew, RA
APPROVED
Under Directive 2 of 1975
AMENDED APPLICATION
Date: 10/23/2017
NYC Development Hub

DOB B-SCAN:

DEPT OF BLDGS121185539 Job Number
IES2516073594 Scan Code
30" x 42" Arch E1 - SHEET SIZE

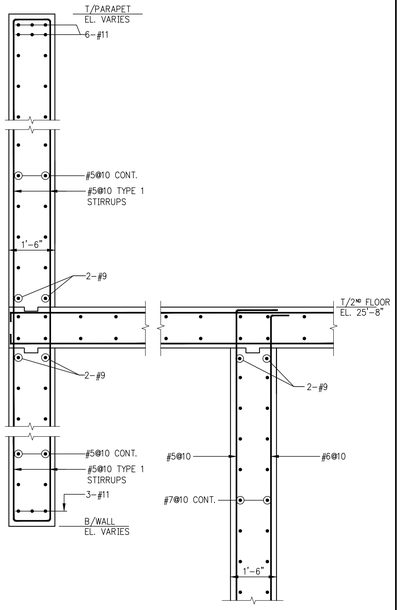

1 S-979 SECTION
SCALE: ½ = 1'-0"

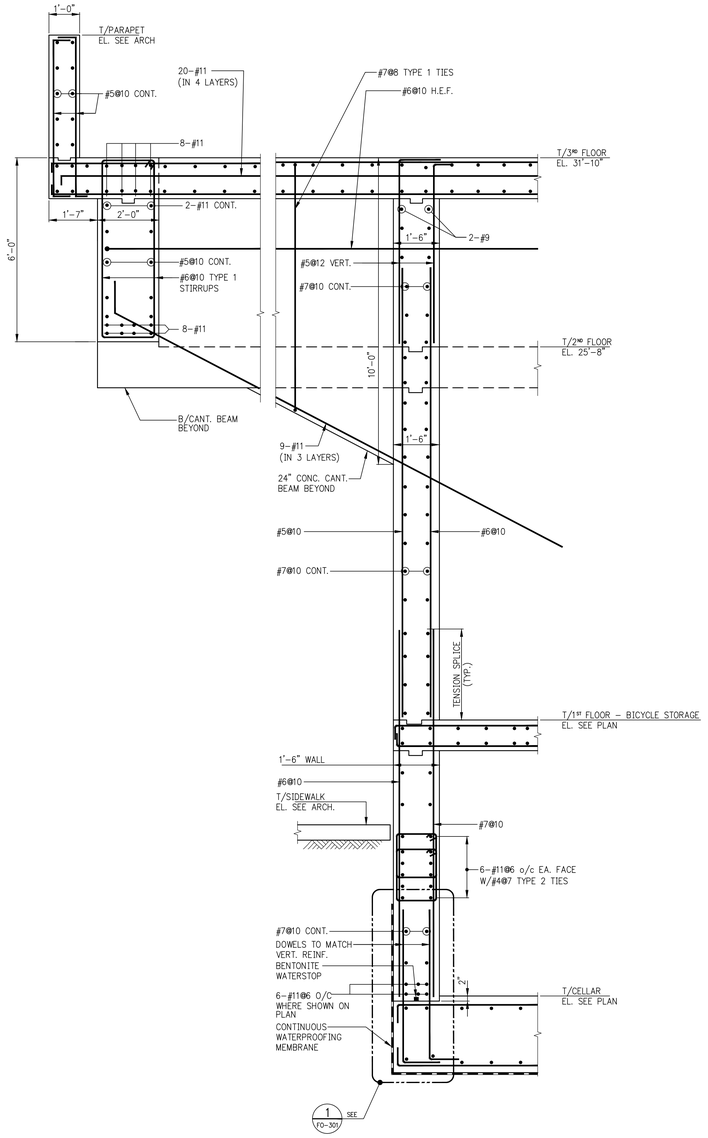

3 S-979 SECTION
SCALE: ½ = 1'-0"

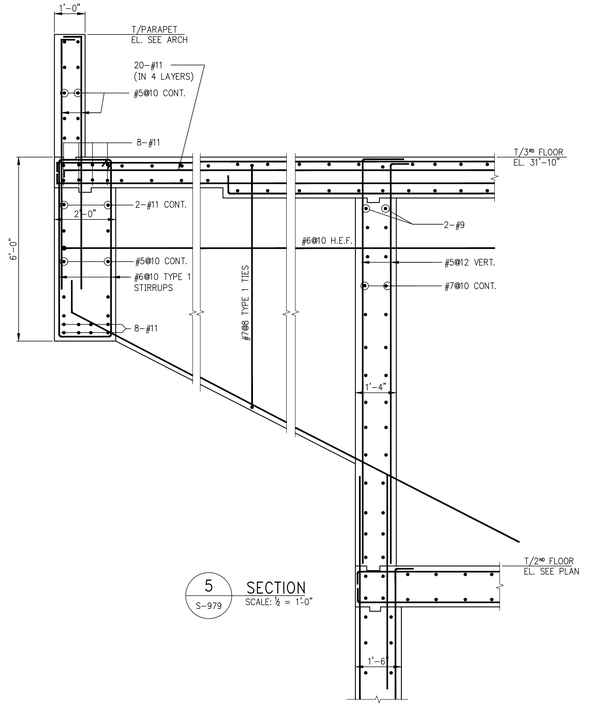

5 S-979 SECTION
SCALE: ½ = 1'-0"

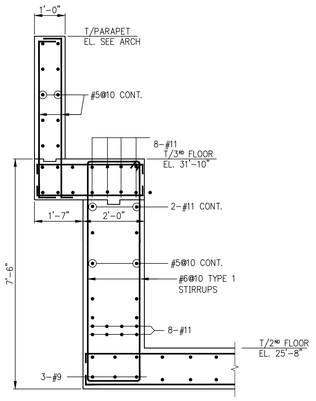

2 S-979 SECTION
SCALE: ½ = 1'-0"

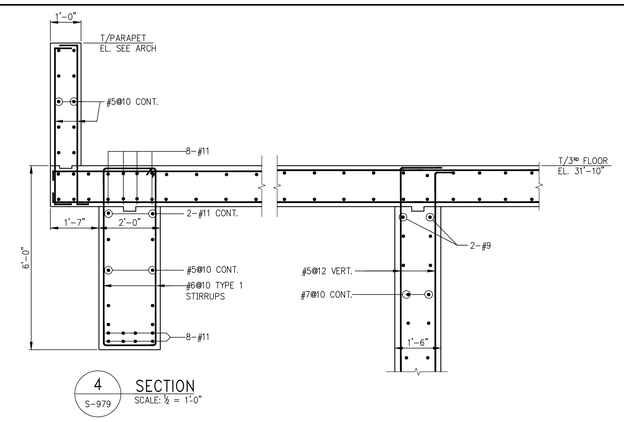

4 S-979 SECTION
SCALE: ½ = 1'-0"

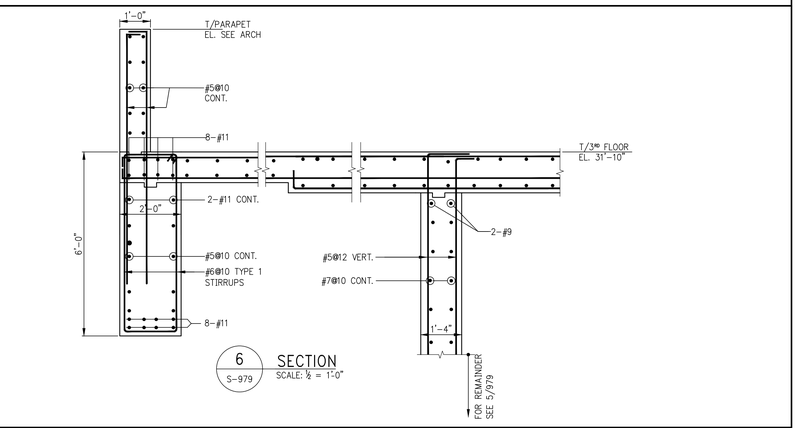

6 S-979 SECTION
SCALE: ½ = 1'-0"

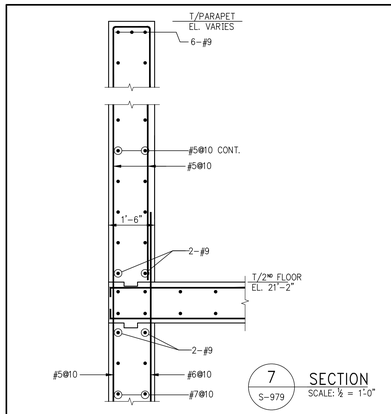

7 S-979 SECTION
SCALE: ½ = 1'-0"

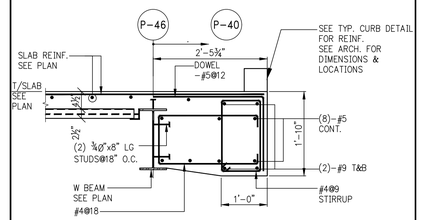

8 S-979 SECTION
SCALE: 3/4" = 1'-0"

KEY PLAN:

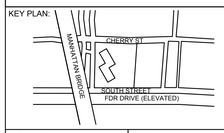

PROJECT NORTH

TRUE NORTH

DEVELOPER:
EXTELL DEVELOPMENT COMPANY
805 Third Ave, 7th Floor
New York, NY 10022
TEL: 212-712-6000 FAX: 212-712-6100

ARCHITECT OF RECORD:
AAI ARCHITECTS, P.C.
14 Wall Street, 2nd Floor
New York, NY 10005
TEL: 212-964-4040 FAX: 212-964-4090

INTERIOR DESIGNER:
MEYER DAVIS
180 Varick St, suite 404
New York, NY 10014
TEL: 212-627-5574

LANDSCAPE DESIGNER:
WEST 8 URBAN DESIGN & LANDSCAPE ARCHITECTURE P.C.
333 Hudson Street, Suite 905
New York, NY 10013
TEL: 212-285-0088 FAX: 212-285-0228

STRUCTURAL ENGINEERS:
WSP
228 East 45th Street
New York, NY 10017
TEL: 212-687-9888 FAX: 646-487-5501

MEP ENGINEERS:
ICOR ASSOCIATES, LLC
485 C Route 1 South, Suite 200
Iseline, NJ 08830
TEL: 908-272-3300 FAX: 908-272-4440

GEOTECHNICAL ENGINEERS:
LANGAN ENGINEERING & ENVIRONMENTAL SERVICES
21 Penn Plaza - 360 West 31st Street, 8th Floor
New York, NY 10001
TEL: 212.479.5400 FAX: 212.479.5444

No.	DESCRIPTION:	DATE:
	ADDENDUM #16	02-04-16
	ASI #57	02-26-16
	ISSUE FOR CONSTRUCTION	03-18-16
1	ASI #80	12-09-16
	ISSUED FOR FILING	05-22-17

Discrepancies must be reported immediately to the Architect before proceeding. Only figured dimensions are to be used. Contractors must check all dimensions on site. This drawing is protected by copyright.

ALL DIMENSIONS ARE SHOWN IN IMPERIAL.

CONSULTANT:
WSP

PROJECT:
252 SOUTH STREET
NEW YORK, NY

DRAWING TITLE:
SUPERSTRUCTURE
SECTIONS 10

SEAL & SIGNATURE:
STATE OF NEW YORK · ANMAD RASHEED · No. 085857 · LICENSED PROFESSIONAL ENGINEER

DATE:	07/25/14
PROJECT No:	1302510
DRAWN: CADD	REV:
CHK: CL	
SCALE: N.T.S.	

DWG No:
S-979.00

DOB PAGE No: of

DOB EMPLOYEE STAMP:
Tina Mathew, RA
APPROVED
Under Directive 2 of 1975
AMENDED APPLICATION
Date: 10/23/2017
NYC Development Hub

DOB B-SCAN:

FILE NAME:
PLOT DATE:

DEPT OF BLDGS121185039 Job Number
ES462961041 Scan Code
30" x 42" Arch E1 - SHEET SIZE

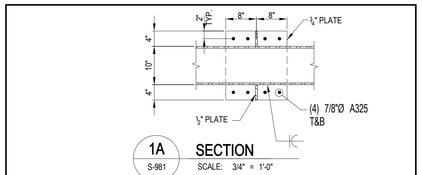

1A S-981 **SECTION**
SCALE: 3/4" = 1'-0"

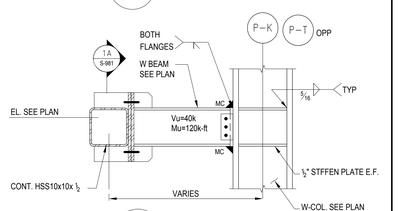

1 S-981 **SECTION**
SCALE: 3/4" = 1'-0"

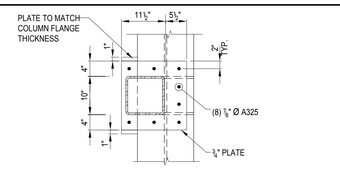

2A S-981 **SECTION**
SCALE: 3/4" = 1'-0"

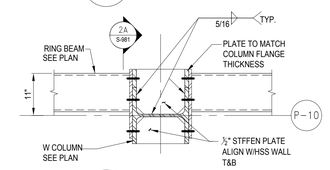

2 S-981 **PLAN VIEW**
SCALE: 3/4" = 1'-0"

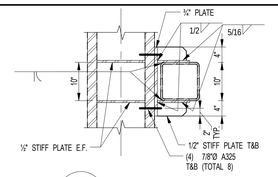

3A S-981 **SECTION**
SCALE: 3/4" = 1'-0"

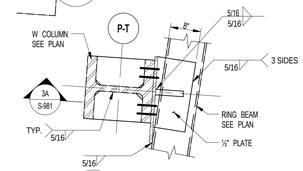

3 S-981 **PLAN VIEW**
SCALE: 3/4" = 1'-0"

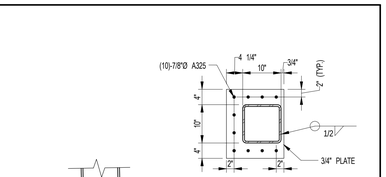

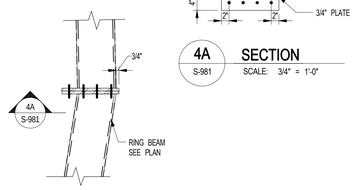

4A S-981 **SECTION**
SCALE: 3/4" = 1'-0"

4 S-981 **HSS SPLICE DETAIL**
SCALE: 3/4" = 1'-0"

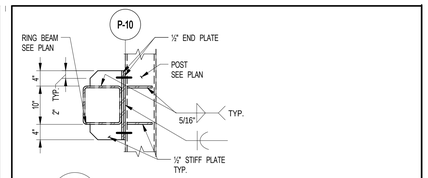

5A S-981 **SECTION**
SCALE: 3/4" = 1'-0"

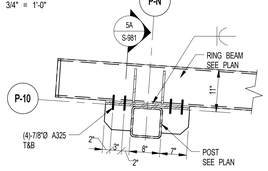

5 S-981 **PLAN VIEW**
SCALE: 3/4" = 1'-0"

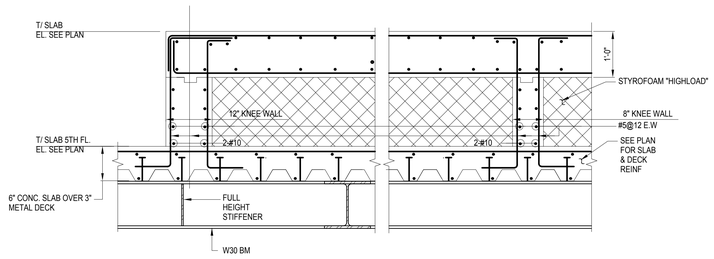

6 S-981 **SECTION**
SCALE: 3/4" = 1'-0"

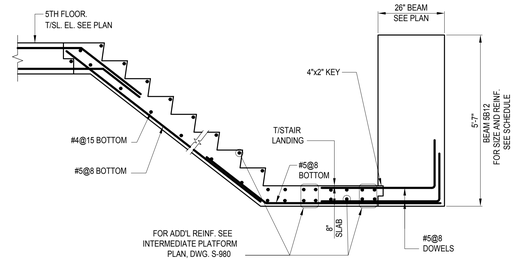

9 S-981 **SECTION**
SCALE: 1/2"=1'-0"

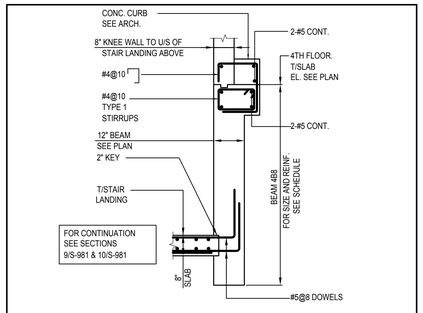

11 S-981 **SECTION**
SCALE: 1/2"=1'-0"
NOTE:
STEEL FRAMING NOT SHOWN

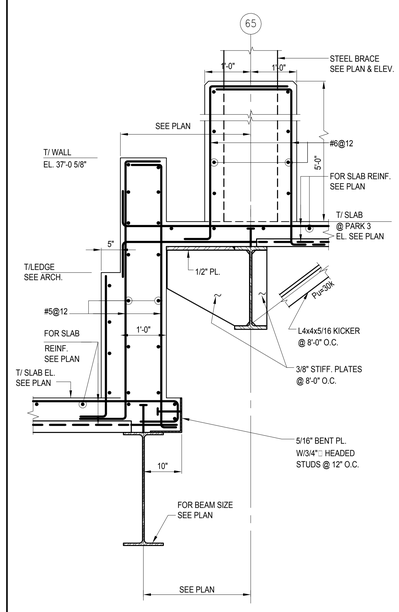

7 S-981 **SECTION**
SCALE: 3/4" = 1'-0"

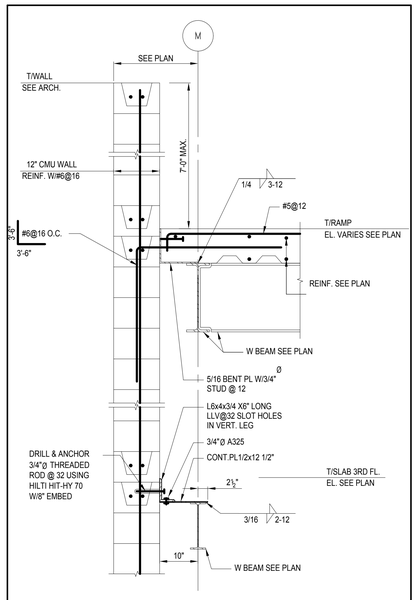

8 S-981 **SECTION**
SCALE: 3/4" = 1'-0"

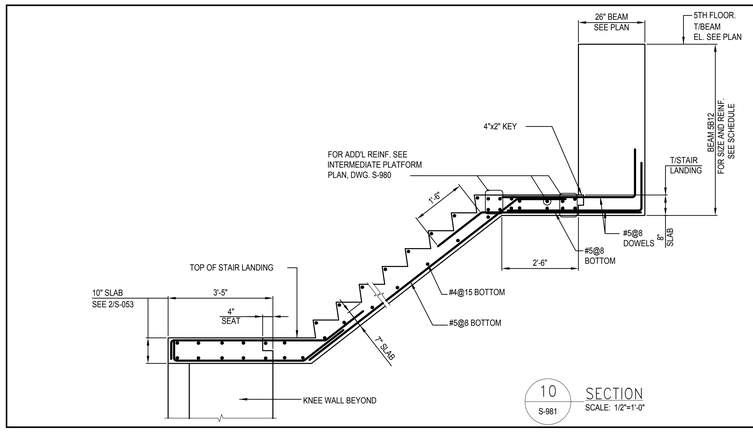

10 S-981 **SECTION**
SCALE: 1/2"=1'-0"

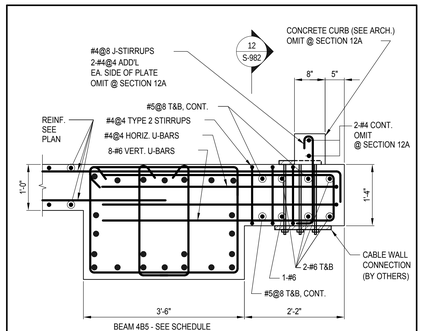

12 S-981 12A S-981 **SECTION**
SCALE: 3/4"=1'-0"

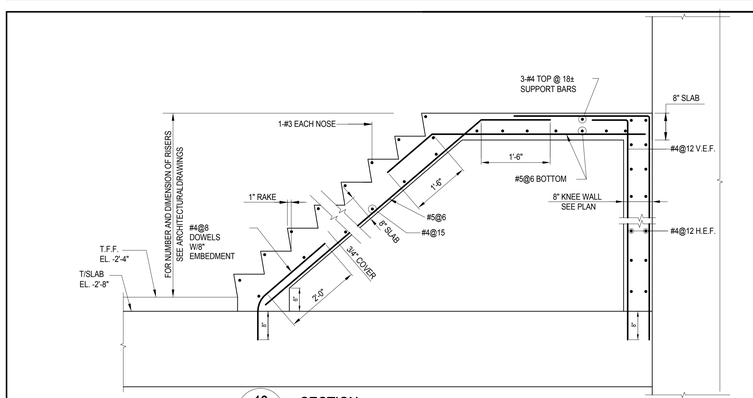

13 S-981 **SECTION**
SCALE: N.T.S

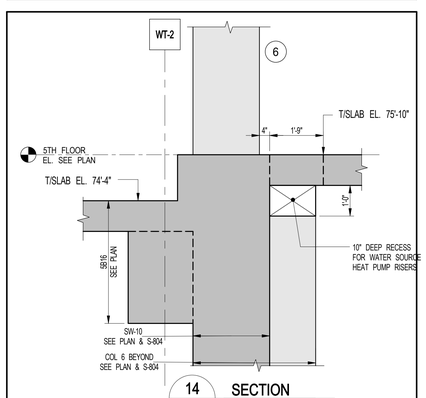

14 S-981 **SECTION**
SCALE: 1/2" = 1'-0"
NOTE:
1. REINF. NOT SHOWN

FILE NAME:
PLOT DATE:

KEY PLAN:

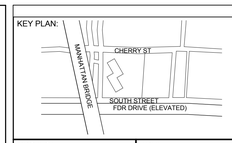

PROJECT NORTH | TRUE NORTH

DEVELOPER:
EXTELL DEVELOPMENT COMPANY
805 Third Ave, 7th Floor
New York, NY 10022
TEL: 212-712-6000 FAX: 212-712-6100

ARCHITECT OF RECORD:
AAI ARCHITECTS, P.C.
14 Wall Street, 2nd Floor
New York, NY 10005
TEL: 212-964-4040 FAX: 212-964-4090

INTERIOR DESIGNER:
MEYER DAVIS
180 Varick St, suite 404
New York, NY 10014
TEL: 212-627-5574

LANDSCAPE DESIGNER:
WEST 8 URBAN DESIGN & LANDSCAPE ARCHITECTURE P.C.
333 Hudson Street, Suite 905
New York, NY 10013
TEL: 212-285-0088 FAX: 212-285-0228

STRUCTURAL ENGINEERS:
WSP
228 East 45th Street
New York, NY 10017
TEL: 212-687-9888 FAX: 646-487-5501

MEP ENGINEERS:
ICOR ASSOCIATES, LLC
485 C Route 1 South, Suite 200
Iselin, NJ 08830
TEL: 908-272-3300 FAX: 908-272-4440

GEOTECHNICAL ENGINEERS:
LANGAN ENGINEERING & ENVIRONMENTAL SERVICES
21 Penn Plaza - 360 West 31st Street, 8th Floor
New York, NY 10001
TEL: 212.479.5400 FAX: 212.479.5444

No.	DESCRIPTION:	DATE:
	ASI #57	02-26-16
	ASI #58	03-04-16
	ASI#59	03-11-16
	ISSUE FOR CONSTRUCTION	03-18-16
1	ASI#61	04-22-16
2	ASI #62	04-29-16
3	ASI #63	05-06-16
4	ASI #64	05-13-16
5	ASI #74	09-16-16
	ISSUED FOR FILING	05-22-17

Discrepancies must be reported immediately to the Architect before proceeding. Only figured dimensions are to be used. Contractors must check all dimensions on site. This drawing is protected by copyright.

ALL DIMENSIONS ARE SHOWN IN IMPERIAL.

CONSULTANT:
WSP

PROJECT:
252 SOUTH STREET
NEW YORK, NY

DRAWING TITLE:
SUPERSTRUCTURE SECTIONS 11

SEAL & SIGNATURE:

DATE:	02/26/16
PROJECT No:	1302510
DRAWN: CAD	REV:
CHK: CL	
SCALE: As indicated	
DWG No:	S-981.00
DOB PAGE No:	of

DOB EMPLOYEE STAMP:

DOB B-SCAN:

DEPT OF BLDGS121185569 Job Number
ES505564917J7 Scan Code
30" x 42" Anti El. SHEET SIZE

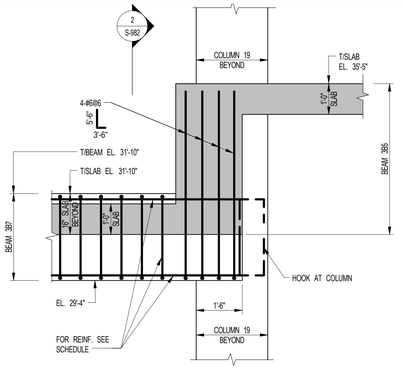

1 SECTION
1/2" = 1'-0"

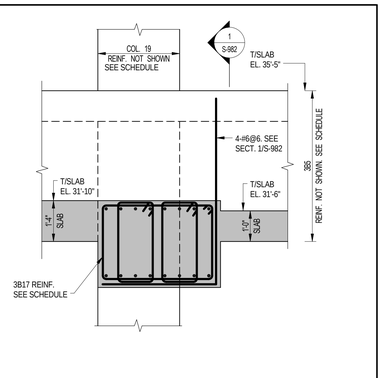

2 SECTION
1/2" = 1'-0"

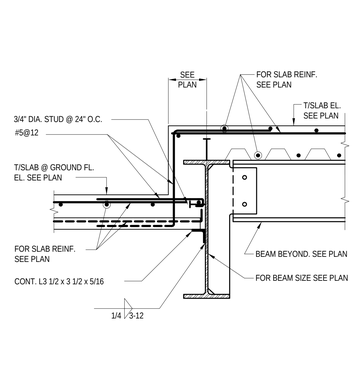

3 SECTION
3/4" = 1'-0"

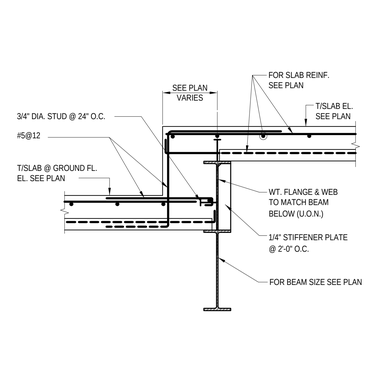

4 SECTION
3/4" = 1'-0"

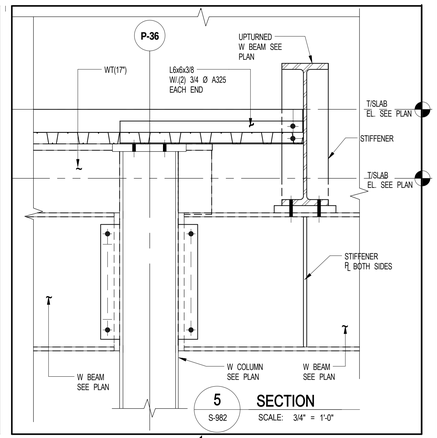

5 SECTION
S-982 SCALE: 3/4" = 1'-0"

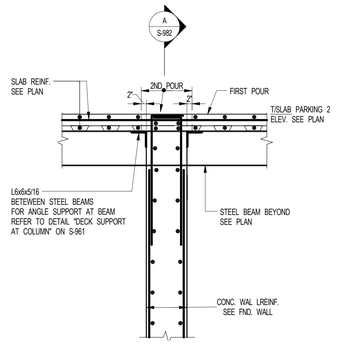

6 SECTION
S-982 SCALE: 1/2" = 1'-0"

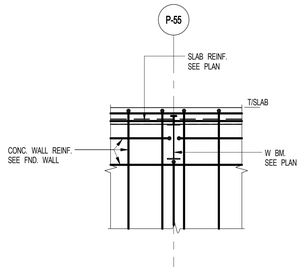

A SECTION
S-982 SCALE: 1/2" = 1'-0"

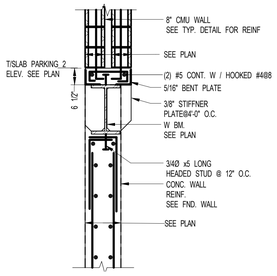

7 SECTION
S-982 SCALE: 1/2" = 1'-0"

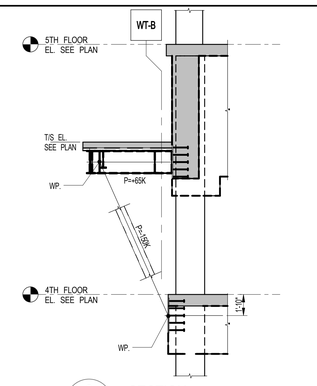

8 SECTION
S-982 SCALE: 3/16" = 1'-0"

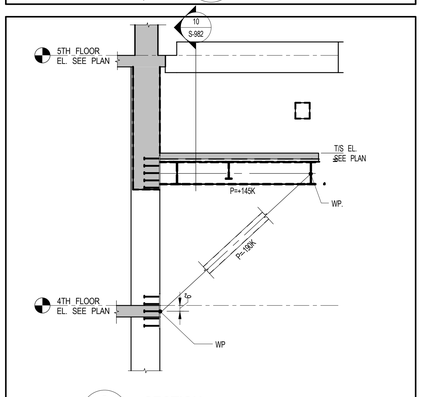

9 SECTION
S-982 SCALE: 3/16" = 1'-0"

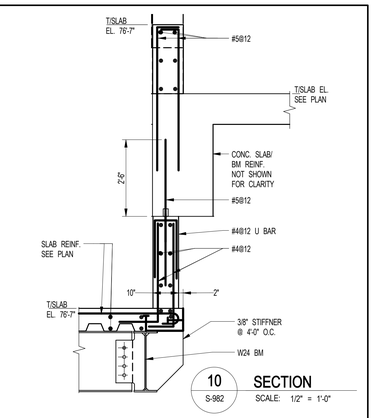

10 SECTION
S-982 SCALE: 1/2" = 1'-0"

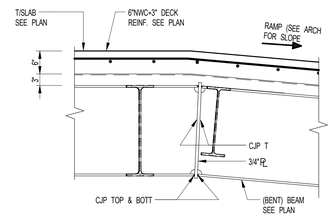

11 SECTION
S-982 SCALE: 3/4" = 1'-0"

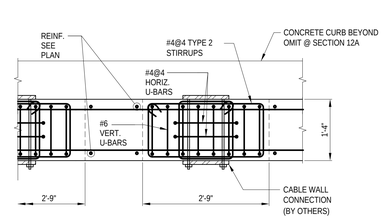

12 SECTION
S-982 SCALE: 3/4"=1'-0"

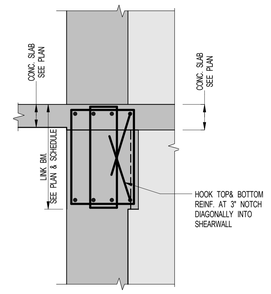

13 SECTION
S-982 SCALE: 1/2" = 1'-0"

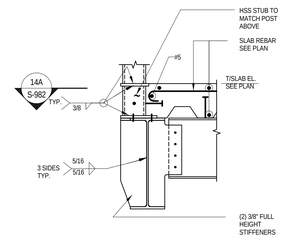

14 SECTION
S-982 SCALE: 3/4" = 1'-0"

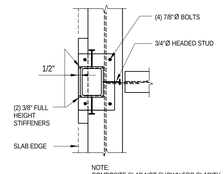

14A SECTION
S-982 SCALE: 3/4" = 1'-0"

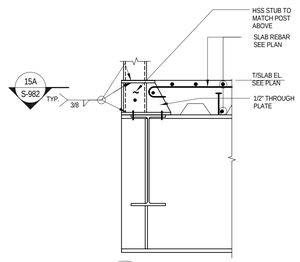

15 SECTION
S-982 SCALE: 3/4" = 1'-0"

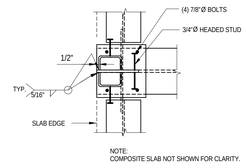

15A SECTION
S-982 SCALE: 3/4" = 1'-0"

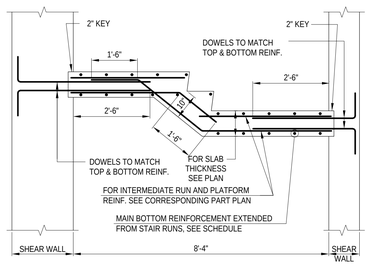

16 SECTION
S-982 SCALE: 1/2" = 1'-0"

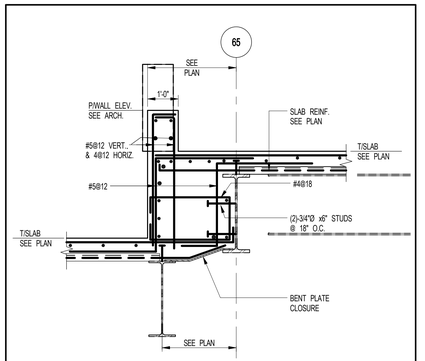

17 SECTION
S-982 SCALE: 1/2" = 1'-0"

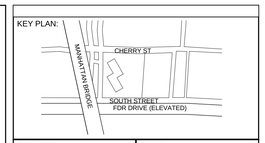

PROJECT NORTH

TRUE NORTH

DEVELOPER:
EXTELL DEVELOPMENT COMPANY
805 Third Ave, 7th Floor
New York, NY 10022
TEL: 212-712-6000 FAX: 212-712-6100

ARCHITECT OF RECORD:
AAI ARCHITECTS, P.C.
14 Wall Street, 2nd Floor
New York, NY 10005
TEL: 212-964-4040 FAX: 212-964-4090

INTERIOR DESIGNER:
MEYER DAVIS
180 Varick St, suite 404
New York, NY 10014
TEL: 212-627-5574

LANDSCAPE DESIGNER:
WEST 8 URBAN DESIGN & LANDSCAPE ARCHITECTURE P.C.
333 Hudson Street, Suite 905
New York, NY 10013
TEL: 212-285-0088 FAX: 212-285-0228

STRUCTURAL ENGINEERS:
WSP
228 East 45th Street
New York, NY 10017
TEL: 212-687-9888 FAX: 646-487-5501

MEP ENGINEERS:
ICOR ASSOCIATES, LLC
485 C Route 1 South, Suite 200
Iseline, NJ 08830
TEL: 908-272-3300 FAX: 908-272-4440

GEOTECHNICAL ENGINEERS:
LANGAN ENGINEERING & ENVIRONMENTAL SERVICES
21 Penn Plaza - 360 West 31st Street, 8th Floor
New York, NY 10001
TEL: 212.479.5400 FAX: 212.479.5444

No.	DESCRIPTION:	DATE:
	ISSUE FOR CONSTRUCTION	03-18-16
1	ASI#61	04-22-16
2	ASI #62	04-29-16
3	ASI #63	05-06-16
4	ASI #64	05-13-16
5	ASI #67	06-17-16
	ISSUED FOR FILING	05-22-17

Discrepancies must be reported immediately to the Architect before proceeding. Only figured dimensions are to be used. Contractors must check all dimensions on site. This drawing is protected by copyright.

ALL DIMENSIONS ARE SHOWN IN IMPERIAL.

CONSULTANT:
WSP

PROJECT:
252 SOUTH STREET
NEW YORK, NY

DRAWING TITLE:
SUPERSTRUCTURE SECTIONS 12

SEAL & SIGNATURE:
STATE OF NEW YORK · AHMAD RASTEGAR · No. 085857 · LICENSED PROFESSIONAL ENGINEER

DATE:	04/08/16
PROJECT No:	1302510
DRAWN: CAD	REV:
CHK: CL	
SCALE: As indicated	
DWG No:	S-982.00
DOB PAGE No:	of

DOB EMPLOYEE STAMP:
Tina Mathew, RA
APPROVED
Under Directive 1 of 1975
AMENDED APPLICATION
Date: 10/23/2017
NYC Development Hub

DOB B-SCAN:

FILE NAME:
PLOT DATE:

DEPT OF BLDGS121185539 Job Number
IE5064843039 Scan Code
30" x 42" Arch E1 - SHEET SIZE

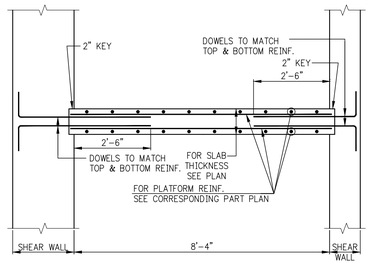

1 S-983 SECTION SCALE: 1/2"=1'-0"

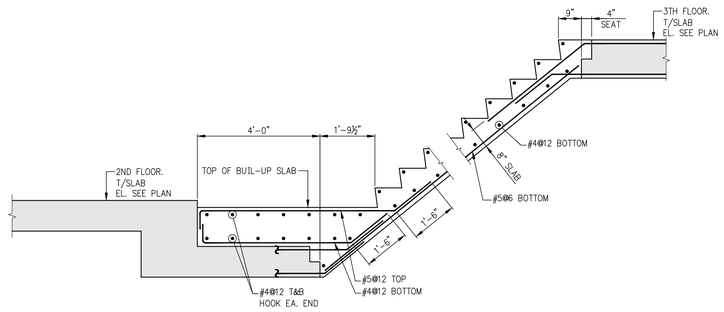

2 S-983 SECTION SCALE: 1/2"=1'-0"

NOTE: FOR ADD'L INFORMATION SEE S-980

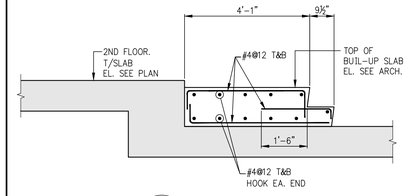

3 S-983 SECTION SCALE: 1/2"=1'-0"

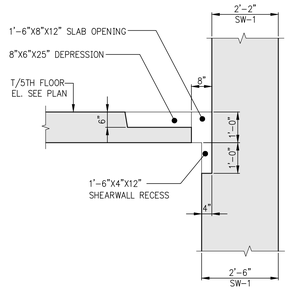

4 S-983 SECTION SCALE: 1/2"=1'-0"

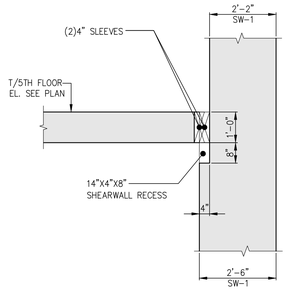

5 S-983 SECTION SCALE: 1/2"=1'-0"

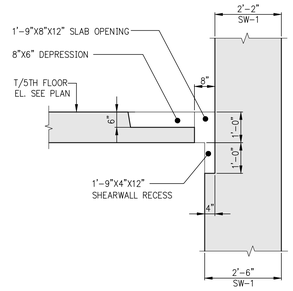

6 S-983 SECTION SCALE: 1/2"=1'-0"

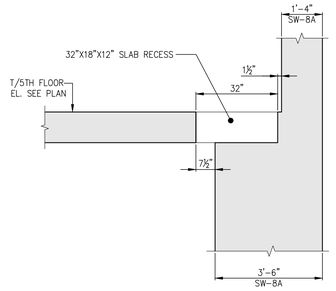

7 S-983 SECTION SCALE: 1/2"=1'-0"

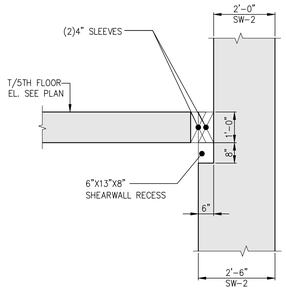

8 S-983 SECTION SCALE: 1/2"=1'-0"

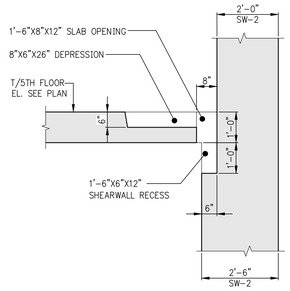

9 S-983 SECTION SCALE: 1/2"=1'-0"

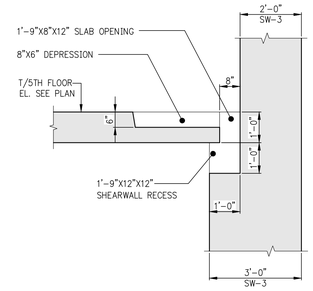

10 S-983 SECTION SCALE: 1/2"=1'-0"

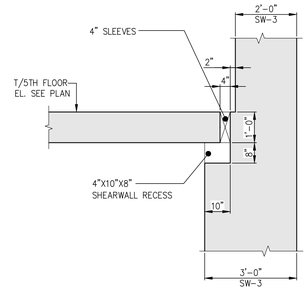

11 S-983 SECTION SCALE: 1/2"=1'-0"

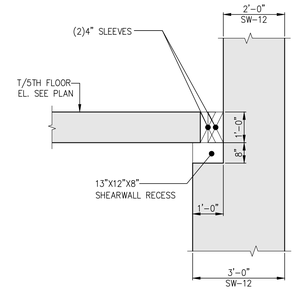

12 S-983 SECTION SCALE: 1/2"=1'-0"

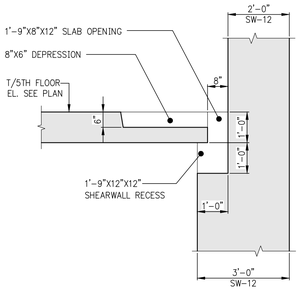

13 S-983 SECTION SCALE: 1/2"=1'-0"

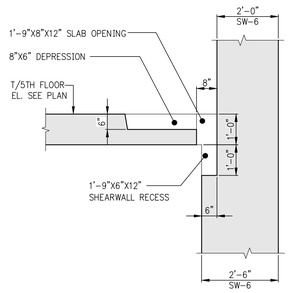

14 S-983 SECTION SCALE: 1/2"=1'-0"

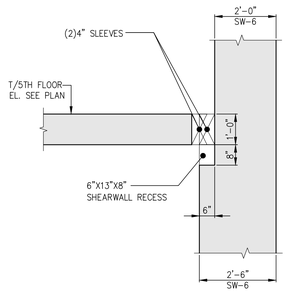

15 S-983 SECTION SCALE: 1/2"=1'-0"

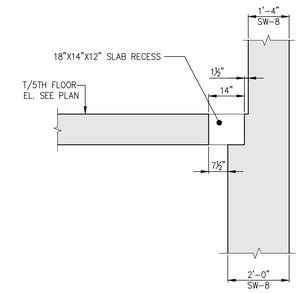

16 S-983 SECTION SCALE: 1/2"=1'-0"

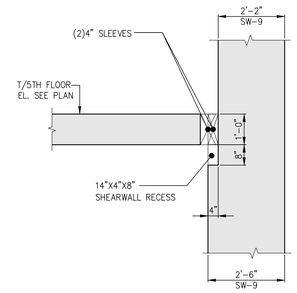

17 S-983 SECTION SCALE: 1/2"=1'-0"

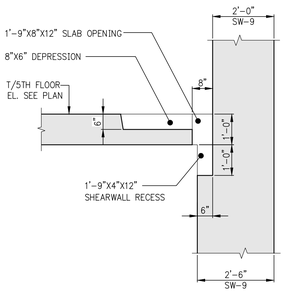

18 S-983 SECTION SCALE: 1/2"=1'-0"

KEY PLAN:

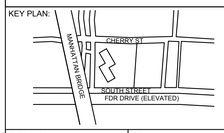

PROJECT NORTH | TRUE NORTH

DEVELOPER:
EXTELL DEVELOPMENT COMPANY
805 Third Ave, 7th Floor
New York, NY 10022
TEL: 212-712-6000 FAX: 212-712-6100

ARCHITECT OF RECORD:
AAI ARCHITECTS, P.C.
14 Wall Street, 2nd Floor
New York, NY 10005
TEL: 212-964-4040 FAX: 212-964-4090

INTERIOR DESIGNER:
MEYER DAVIS
180 Varick St, suite 404
New York, NY 10014
TEL: 212-627-5574

LANDSCAPE DESIGNER:
WEST 8 URBAN DESIGN & LANDSCAPE ARCHITECTURE P.C.
333 Hudson Street, Suite 905
New York, NY 10013
TEL: 212-285-0088 FAX: 212-285-0228

STRUCTURAL ENGINEERS:
WSP
228 East 45th Street
New York, NY 10017
TEL: 212-687-9888 FAX: 646-487-5501

MEP ENGINEERS:
ICOR ASSOCIATES, LLC
485 C Route 1 South, Suite 200
Iseline, NJ 08830
TEL: 908-272-3300 FAX: 908-272-4440

GEOTECHNICAL ENGINEERS:
LANGAN ENGINEERING & ENVIRONMENTAL SERVICES
21 Penn Plaza - 360 West 31st Street, 8th Floor
New York, NY 10001
TEL: 212.479.5400 FAX: 212.479.5444

No.	DESCRIPTION:	DATE:
1	ASI #65	05-20-16
2	ASI #67	06-17-16
	ISSUED FOR FILING	05-22-17

Discrepancies must be reported immediately to the Architect before proceeding. Only figured dimensions are to be used. Contractors must check all dimensions on site. This drawing is protected by copyright.

ALL DIMENSIONS ARE SHOWN IN IMPERIAL.

CONSULTANT: WSP

PROJECT:
252 SOUTH STREET
NEW YORK, NY

DRAWING TITLE:
SUPERSTRUCTURE SECTIONS 13

SEAL & SIGNATURE:
STATE OF NEW YORK ARMAND RANIERI No. 065552 LICENSED PROFESSIONAL ENGINEER

DATE:	07/25/14
PROJECT No:	1302510
DRAWN: CADD	REV:
CHK: CL	
SCALE: N.T.S.	
DWG No:	**S-983.00**
DOB PAGE No:	of

DOB EMPLOYEE STAMP:
Tina Mathew, RA
APPROVED
Under Directive 2 of 1975
AMENDED APPLICATION
Date: 10/23/2017
NYC Development Hub

DOB B-SCAN:

FILE NAME:
PLOT DATE:

DEPT OF BLDGS121105029 Job Number
E1539101302S9 Scan Code
30" x 42" Arch E1 - SHEET SIZE

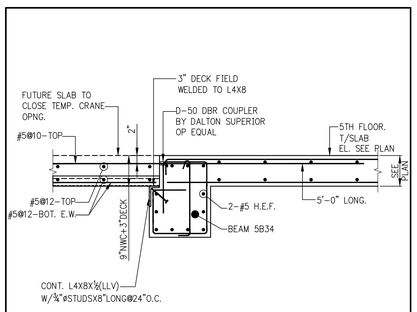

1 S-984 SECTION SCALE: 1/2"=1'-0"

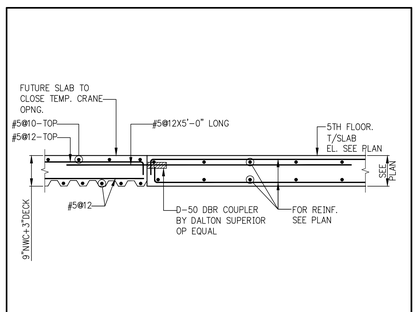

2 S-984 SECTION SCALE: 1/2"=1'-0"

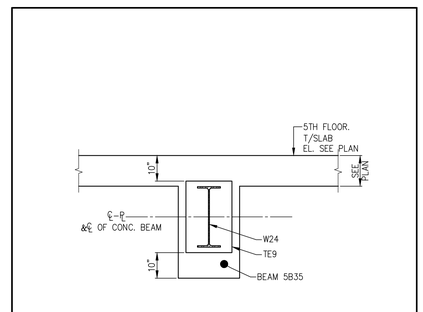

3 S-984 SECTION SCALE: 1/2"=1'-0"

NOTE: FOR ADD'L INFORMATION SEE DETAIL TE9, DWG'S S-963

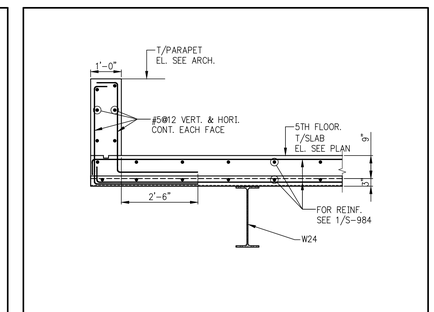

4 S-984 SECTION SCALE: 1/2"=1'-0"

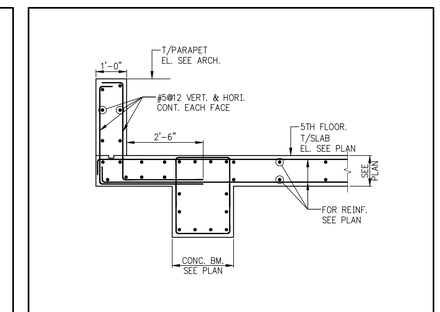

5 S-984 SECTION SCALE: 1/2"=1'-0"

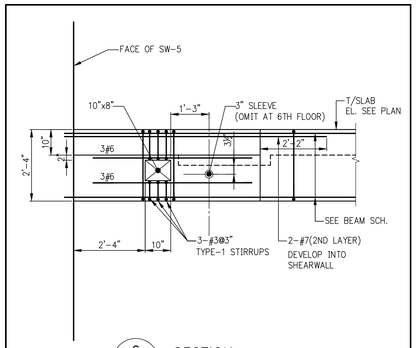

6 S-984 SECTION SCALE: 1/2"=1'-0"

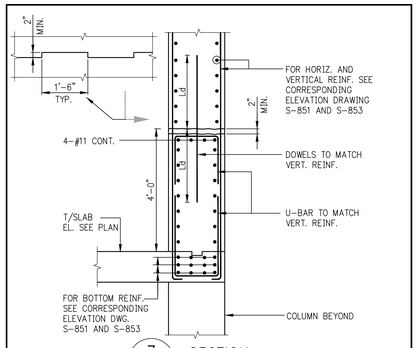

7 S-984 SECTION SCALE: 1/2"=1'-0"

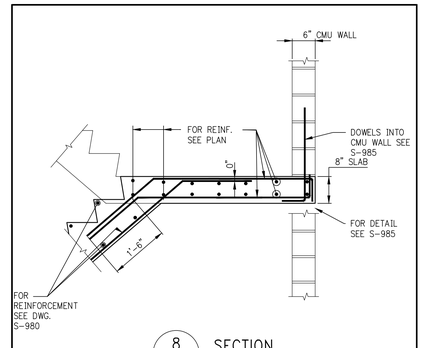

8 S-984 SECTION

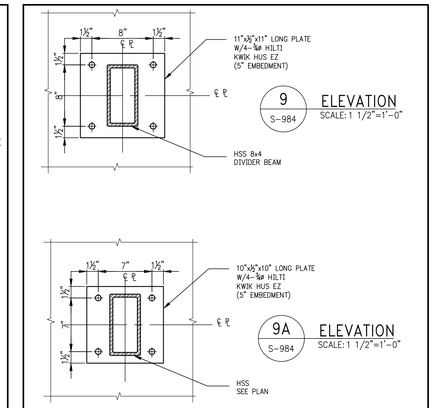

9 S-984 ELEVATION SCALE: 1 1/2"=1'-0"

9A S-984 ELEVATION SCALE: 1 1/2"=1'-0"

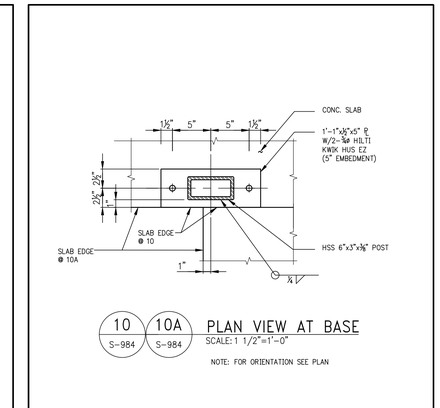

10 S-984 10A S-984 PLAN VIEW AT BASE SCALE: 1 1/2"=1'-0"

NOTE: FOR ORIENTATION SEE PLAN

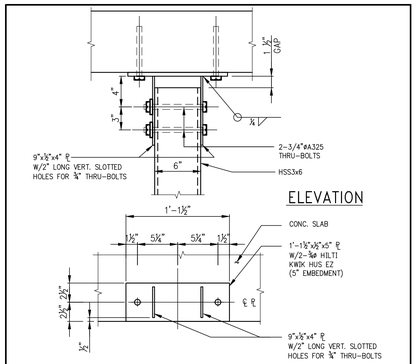

11 S-984 DETAIL SCALE: 1 1/2"=1'-0"

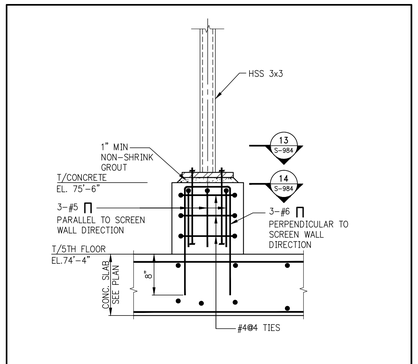

12 S-984 SECTION SCALE: 1"=1'-0"

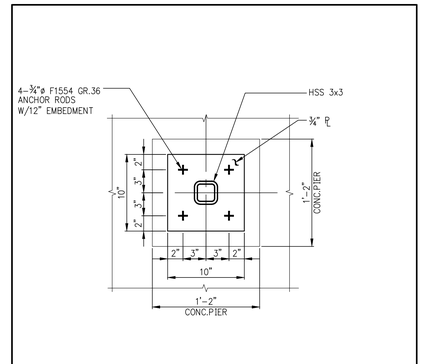

13 S-984 SECTION SCALE: 1½"=1'-0"

NOTE: FOR ORIENTATION SEE PLAN

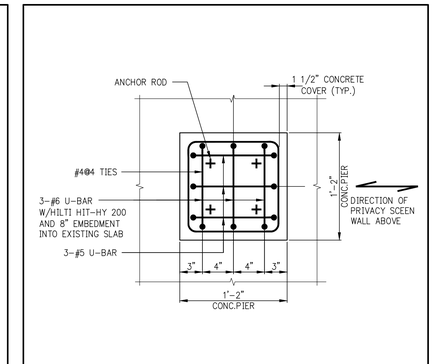

14 S-984 SECTION SCALE: 1½"=1'-0"

NOTE: FOR ORIENTATION SEE PLAN

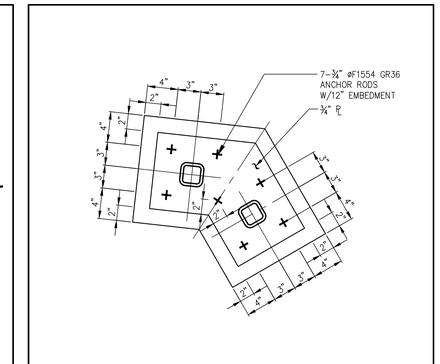

15 S-984 DETAIL SCALE: 1½"=1'-0"

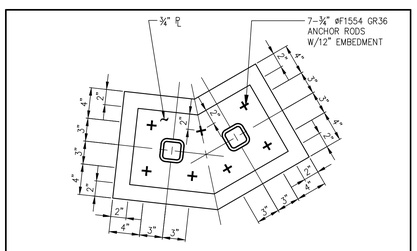

16 S-984 DETAIL SCALE: 1½"=1'-0"

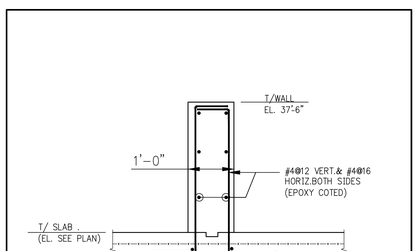

17 S-984 SECTION SCALE: 3/4" = 1'-0"

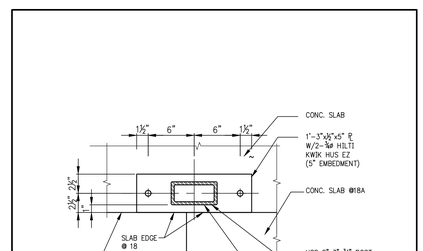

18 S-984 18A S-984 PLAN VIEW AT BASE SCALE: 1 1/2"=1'-0"

NOTE: FOR ORIENTATION SEE PLAN

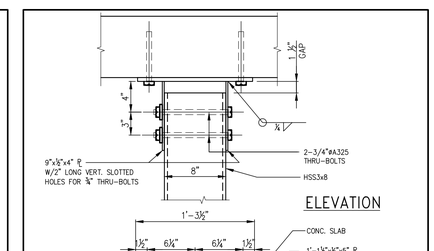

19 S-984 DETAIL SCALE: 1 1/2"=1'-0"

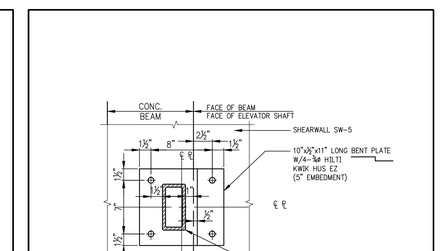

20 S-984 ELEVATION SCALE: 1 1/2"=1'-0"

KEY PLAN:

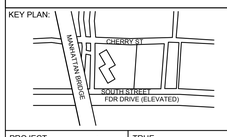

PROJECT NORTH | TRUE NORTH

DEVELOPER:
EXTELL DEVELOPMENT COMPANY
805 Third Ave, 7th Floor
New York, NY 10022
TEL: 212-712-6000 FAX: 212-712-6100

ARCHITECT OF RECORD:
AAI ARCHITECTS, P.C.
14 Wall Street, 2nd Floor
New York, NY 10005
TEL: 212-964-4040 FAX: 212-964-4090

INTERIOR DESIGNER:
MEYER DAVIS
180 Varick St, suite 404
New York, NY 10014
TEL: 212-627-5574

LANDSCAPE DESIGNER:
WEST 8 URBAN DESIGN & LANDSCAPE ARCHITECTURE P.C.
333 Hudson Street, Suite 905
New York, NY 10013
TEL: 212-285-0088 FAX: 212-285-0228

STRUCTURAL ENGINEERS:
WSP
228 East 45th Street
New York, NY 10017
TEL: 212-687-9888 FAX: 646-487-5501

MEP ENGINEERS:
ICOR ASSOCIATES, LLC
485 C Route 1 South, Suite 200
Iseline, NJ 08830
TEL: 908-272-3300 FAX: 908-272-4440

GEOTECHNICAL ENGINEERS:
LANGAN ENGINEERING & ENVIRONMENTAL SERVICES
21 Penn Plaza - 360 West 31st Street, 8th Floor
New York, NY 10001
TEL: 212.479.5400 FAX: 212.479.5444

No.	DESCRIPTION:	DATE:
1	ASI #66	06-03-16
2	ASI #67	06-17-16
3	ASI #68	07-01-16
4	ASI #71	07-29-16
	ISSUED FOR FILING	05-22-17

Discrepancies must be reported immediately to the Architect before proceeding. Only figured dimensions are to be used. Contractors must check all dimensions on site. This drawing is protected by copyright.

ALL DIMENSIONS ARE SHOWN IN IMPERIAL.

CONSULTANT: WSP

PROJECT:
252 SOUTH STREET
NEW YORK, NY

DRAWING TITLE:
SUPERSTRUCTURE SECTIONS 14

SEAL & SIGNATURE: STATE OF NEW YORK · ARMAND RAINIERI · No. 065552 · LICENSED PROFESSIONAL ENGINEER

DATE:		07/25/14
PROJECT No:		1302510
DRAWN:	CADD	REV:
CHK:	CL	
SCALE:	N.T.S.	
DWG No:	S-984.00	
DOB PAGE No:	of	

DOB EMPLOYEE STAMP: Tina Mathew, RA — APPROVED Under Directive 2 of 1975 AMENDED APPLICATION Date: 10/23/2017 NYC Development Hub

DOB B-SCAN:

FILE NAME:
PLOT DATE:

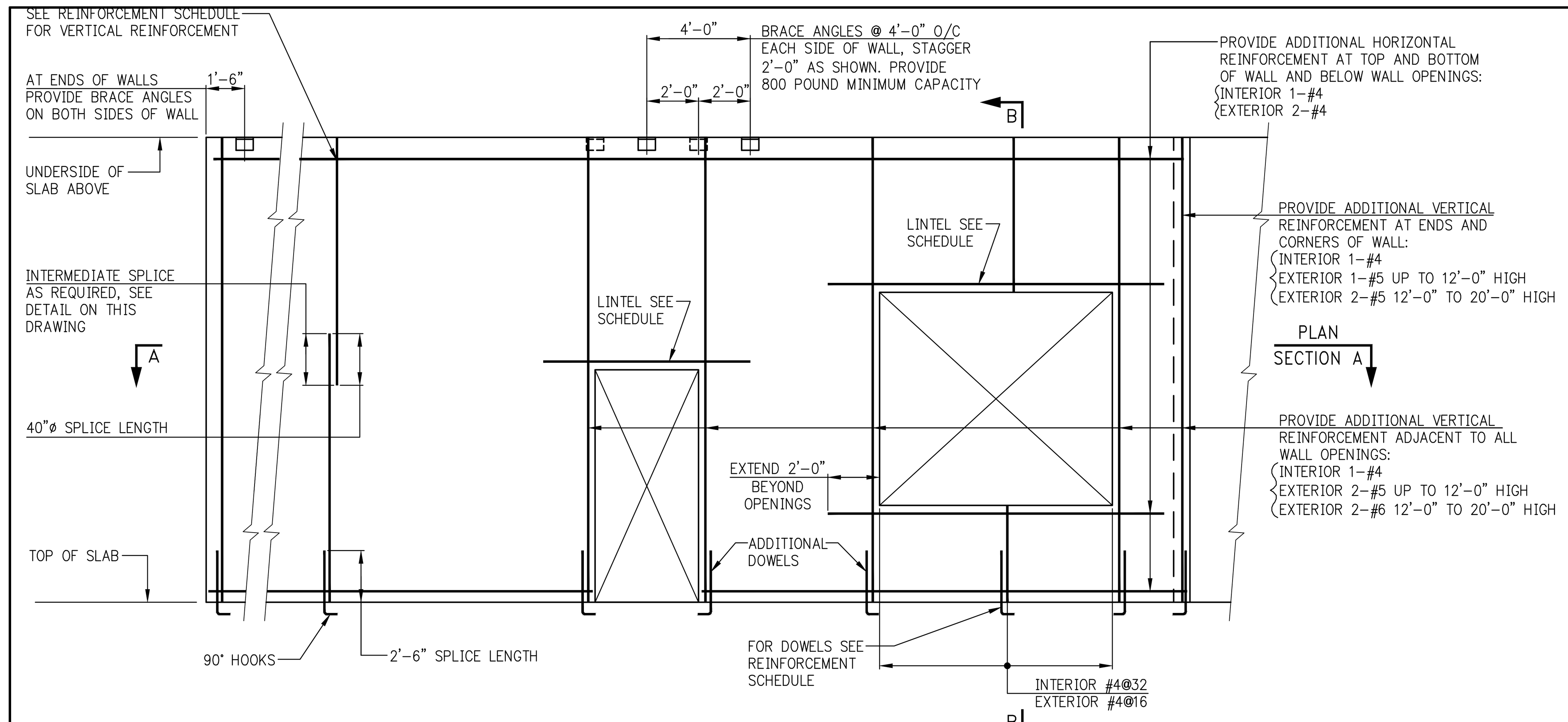

WALL REINFORCEMENT ELEVATION

NOTES:

1. ABOVE DETAIL APPLIES TO ALL MASONRY (C.M.U.) WALLS.
2. FOR MULTIWYTHE EXTERIOR WALLS ABOVE DETAIL APPLIES TO C.M.U. BACKUP WALL ONLY. SEE SECTION BELOW FOR ADDITIONAL INFORMATION

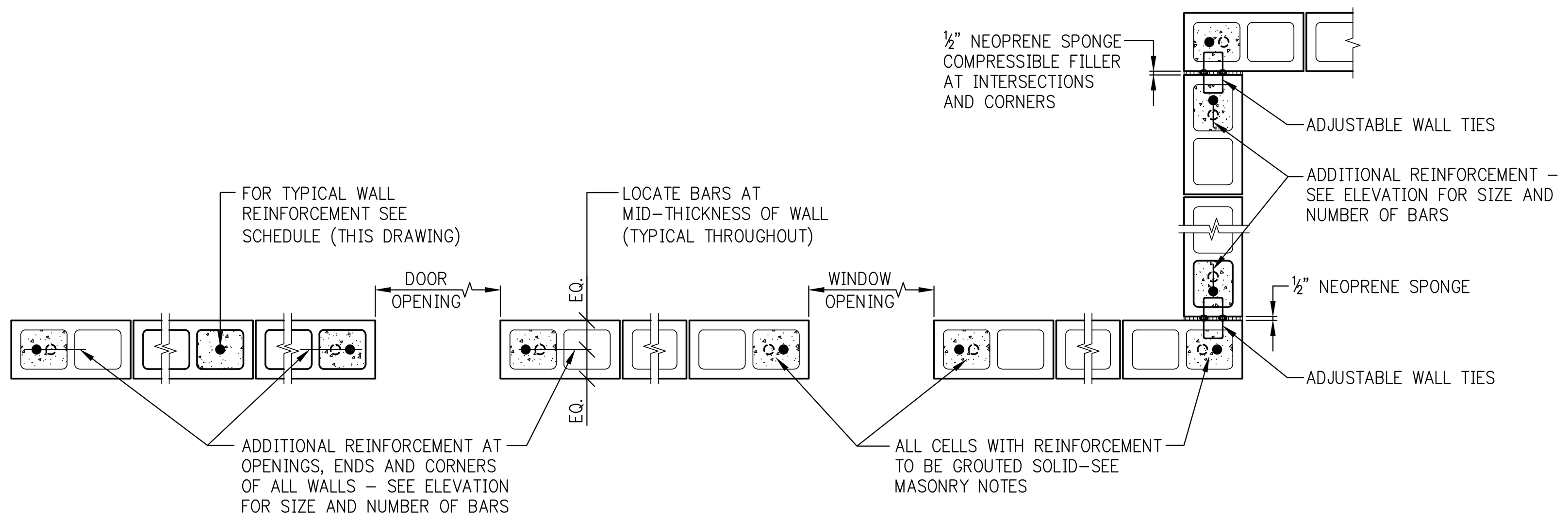

PLAN SECTION A

(FOR DOWELS SEE ELEVATION)

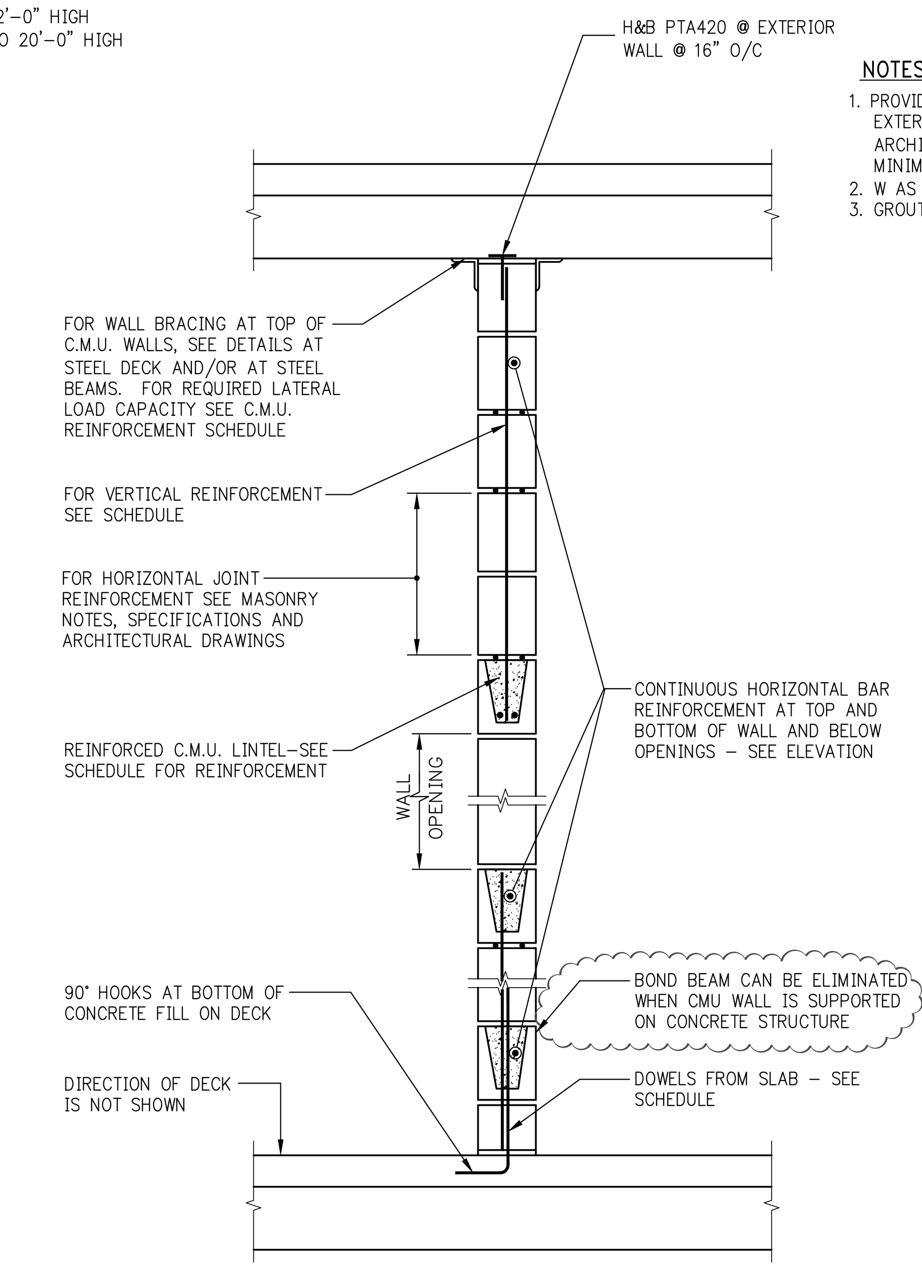

SECTION B

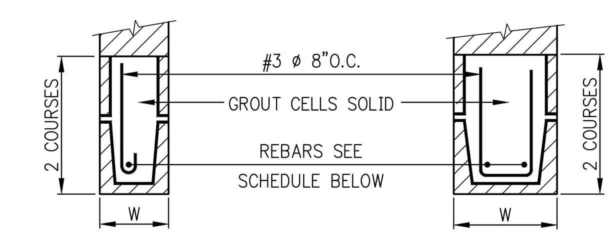

TWO COURSE (16" DEEP) LINTELS

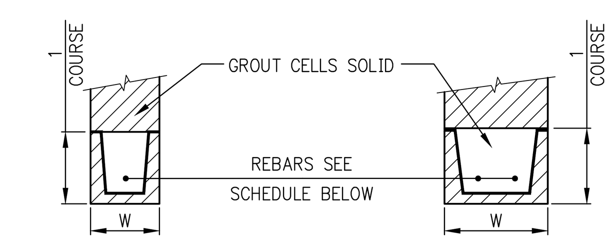

SINGLE COURSE (8" DEEP) LINTELS

NOTES:

1. PROVIDE BLOCK LINTELS FOR ALL OPENINGS IN INTERIOR BLOCK PARTITIONS, AND EXTERIOR WALLS FOR WHICH STEEL LINTELS ARE NOT SHOWN. REFER TO ARCHITECTURAL DRAWINGS FOR SIZE AND LOCATION OF OPENINGS. PROVIDE 8" MINIMUM BEARING AT EACH END.
2. W AS PER TABLE (FIRST DIMENSION).
3. GROUT SHALL BE FINE ONLY.

TYPE OF LOADING *	LINTEL SECTION NOMINAL SIZE (IN.)	REQUIRED REINFORCEMENT								
		CLEAR SPAN								
		3'-4"	4'-0"	4'-8"	5'-4"	6'-0"	6'-8"	7'-4"	8'-0"	10'-0"
WALL LOADS	6x8	1-#4	1-#4	1-#4	2-#4	2-#5	–	–	–	–
	6x16	–	–	–	–	2-#4	2-#4	2-#4	2-#4	2-#5
FLOOR & ROOF LOADS	6x16	1-#4	1-#4	1-#4	1-#5	2-#4	2-#4	2-#5	2-#5	2-#6
WALL LOADS	8x8	1-#4	2-#4	2-#4	2-#4	2-#4	2-#5	2-#6	–	–
	8x16	–	–	–	–	–	–	2-#5	2-#5	2-#6
FLOOR & ROOF LOADS	8x8	2-#4	–	–	–	–	–	–	–	–
	8x16	2-#4	2-#4	2-#4	2-#4	2-#4	2-#4	2-#5	2-#5	2-#6

(*) INCLUDES WEIGHT OF LINTEL

NOTES:

1. WALL LOADS ASSUMED 300lbs. PER LINEAR FOOT.
2. FLOOR & ROOF LOADS INCLUDING WALL LOADS ASSUMED 1000lbs. PER LINEAR FOOT.
3. 8" LINTELS ASSUMED TO WEIGH 50#/FT.
4. 16" LINTELS ASSUMED TO WEIGH 100#/FT.
5. IF ACTUAL LOADS EXCEED THOSE ASSUMED, CONTRACTOR IS TO OBTAIN DIRECTION FROM THE ENGINEER.
6. FOR LINTELS OVER 10'-0" LONG, CONTRACTOR IS TO OBTAIN DIRECTION FROM THE ENGINEER.

REINFORCED BLOCK LINTEL

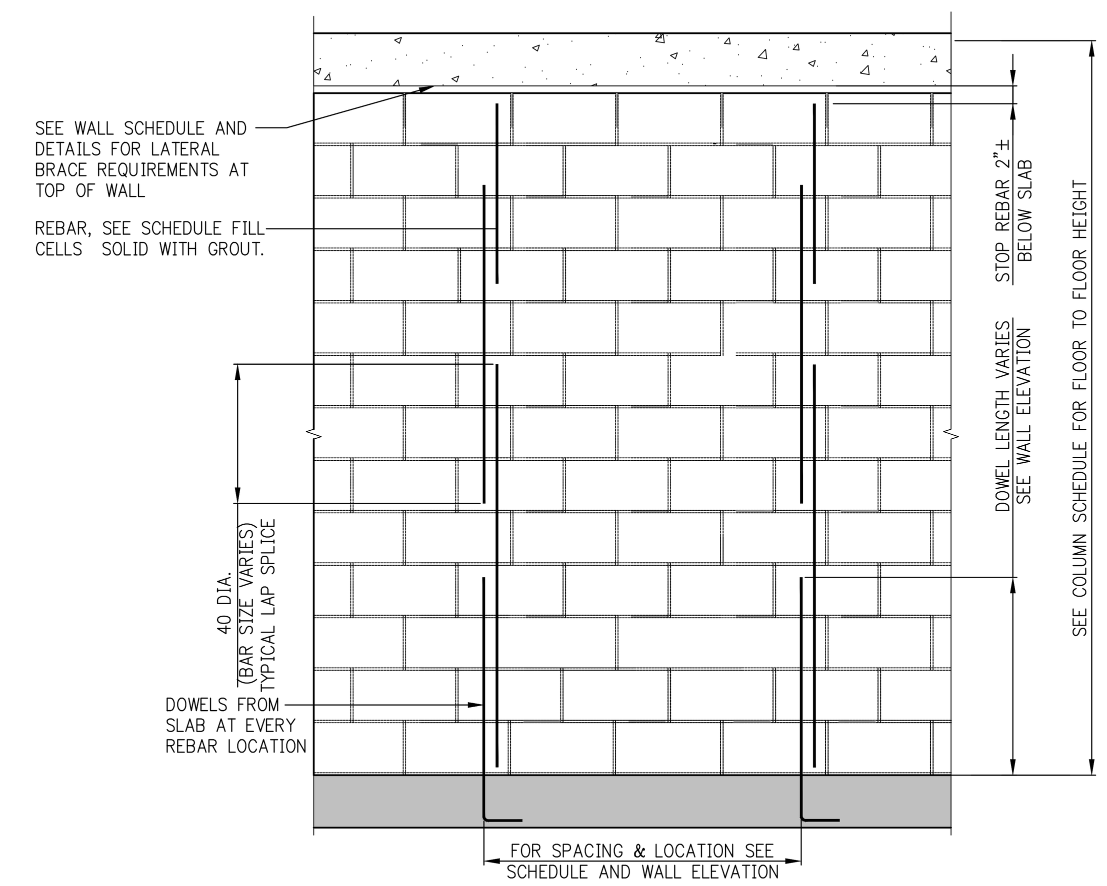

SPLICE LENGTH OF REBAR IN CMU WALL

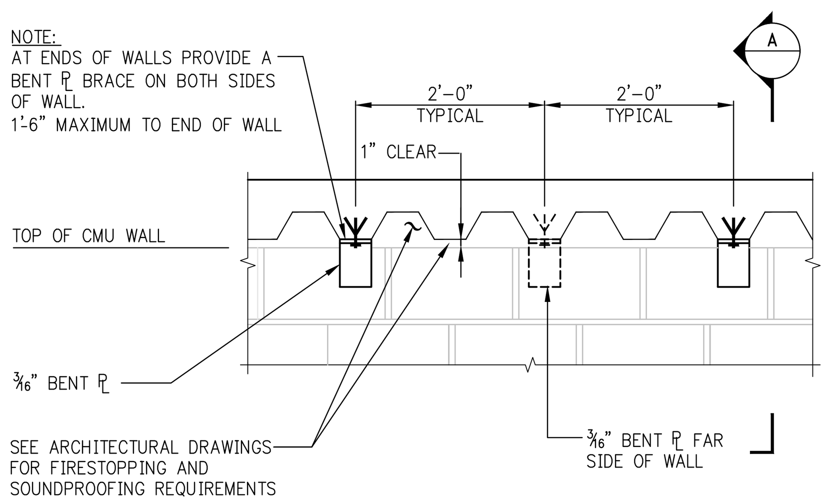

LATERAL BRACE AT TOP OF CMU WALL PERPENDICULAR TO STEEL DECK

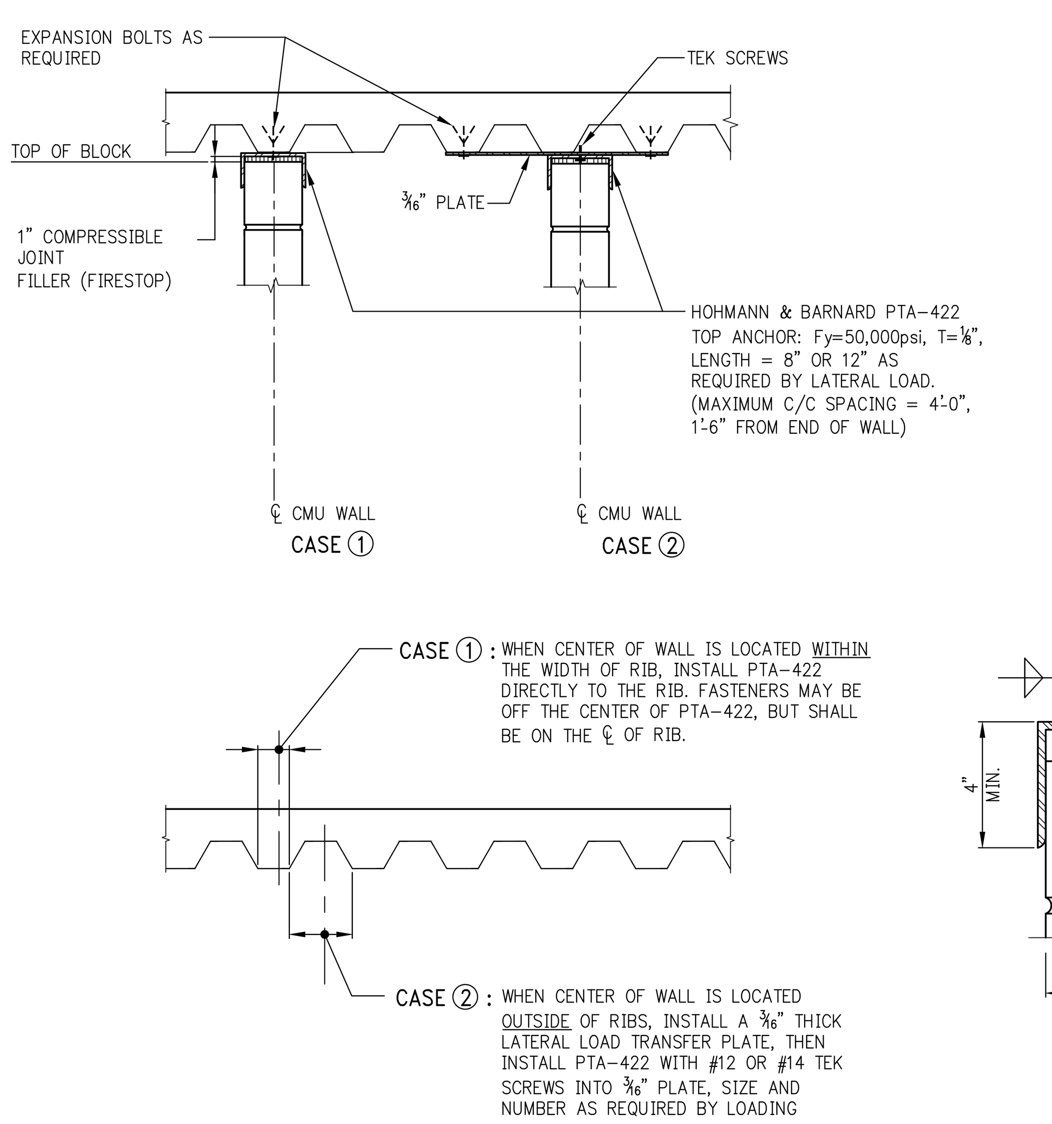

LATERAL BRACE AT TOP OF CMU WALL PARALLEL TO STEEL DECK

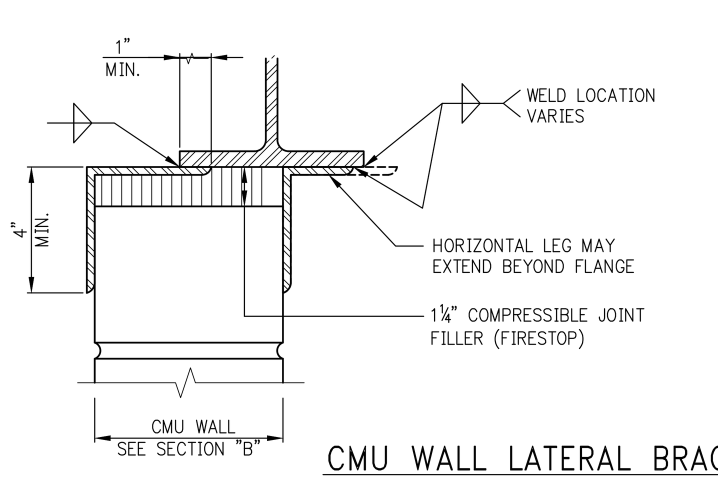

CMU WALL LATERAL BRACES AT UNDERSIDE OF STEEL BEAM

NOTES:

1. HORIZONTAL LEG LENGTH REQUIRED WILL VERY AS A FUNCTION OF:
   a. BEAM FLANGE WIDTH
   b. CMU WALL THICKNESS.
   c. POSITION OF CMU WALL IN RELATION TO BEAM FLANGE.
2. THE APPROPRIATE HORIZONTAL LEG DIMENSION SHALL BE DETERMINED BY THE STEEL FABRICATOR.
3. THE VERTICAL LEG MUST BE A MINIMUM OF 4" LONG.
4. ANGLE THICKNESS MAY BE THE MINIMUM FOR EACH ANGLE SIZE.
5. LENGTH OF CLIPS (BRACES) TO BE 4", SPACED AT 4'-0" O/C- STAGGER OPPOSITE SIDES TO PROVIDE CLEARANCE FOR WELDING AND CMU ERECTION.

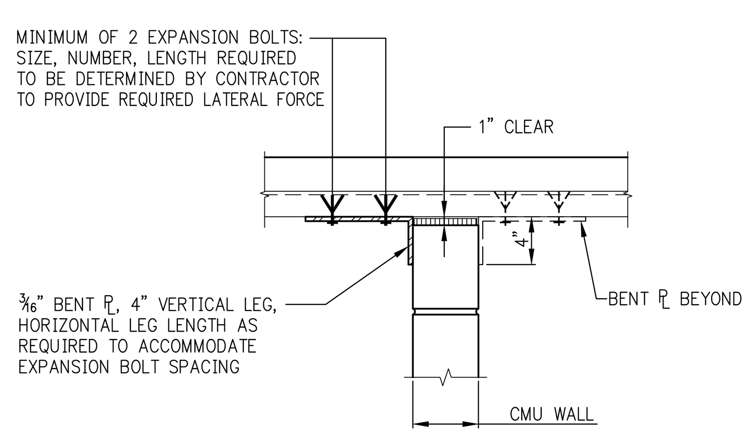

SECTION "A" THROUGH CMU WALL PERPENDICULAR TO STEEL DECK

C.M.U. WALL REINFORCEMENT SCHEDULE (AND LATERAL BRACING LOAD AT TOP)

LOCATION AND HEIGHT OF WALL	MINIMUM BLOCK THICKNESS	VERTICAL REINFORCEMENT	DOWELS FROM SLAB	LATERAL BRACING FORCE (TOP) #/FOOT	REMARKS
INTERIOR UP TO 16'-0"	6"	#4@48	#4@48		
INTERIOR 16'-1" TO 20'-0"	8"	#4@48	#4@48		
EXTERIOR UP TO 10'-0"	6"	#4@32	#4@16		
EXTERIOR 10'-1" TO 12'-0"	8"	#4@32	#4@16		*
EXTERIOR 12'-1" TO 16'-0"	8"	#4@16	#5@16		*
EXTERIOR 16'-1" TO 20'-0"	12"	#4@16	#5@16		*
EXTERIOR CANTILEVER (PARAPET, ETC.) UP TO 8'-0"	8"	#4@16	#5@16		*

* APPLICABLE FOR LATERAL LOAD UP TO 25 PSF

LOOSE LINTEL SCHEDULE (ANGLES OR W-SHAPE PLUS PLATE)

MASONRY OPENING	ANGLE SIZE PER EACH 4" WIDTH OF MASONRY (OR W + PL)	ANGLE SIZE FOR 6" WIDTH OF MASONRY
UP TO 5'-0"	L3½ x 3½ x 5/16	L6 x 4 x 3/8
5'-1" TO 8'-0"	L6 x 3½ x 5/16	L6 x 4 x ½
8'-1" TO 10'-8"	L6 x 3½ x 3/8	–
10'-9" TO 14'-0"	W8x15 + BOTTOM PL 3/8 x 7 (WELD PLATE TO BOTTOM FLANGE)	–

NOTES:

1. ANGLE LENGTH = MASONRY OPENING PLUS 1'-0" (6" BEARING AT EACH END).
2. ANGLE LONG LEG IS VERTICAL.
3. W8 + PL TO BE USED AT 8" WIDE WALL ONLY.
4. PROVIDE FIREPROOFING ON LINTELS FOR MASONRY OPENINGS GREATER THAN 4'-0", AS REQUIRED BY CODE.
5. JOINTS SHALL NOT BE LOCATED OVER THE MASONRY OPENING.

DEPT OF BLDGS 121185528 Job Number
ES457485600 Scan Code

KEY PLAN:

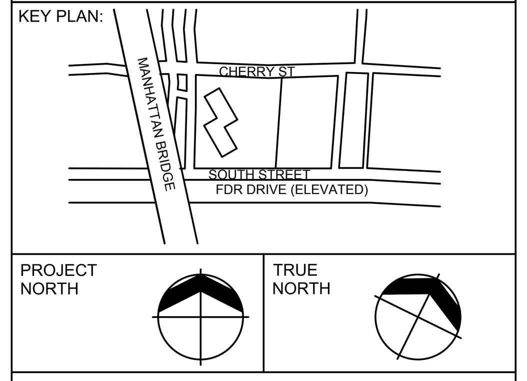

DEVELOPER:
EXTELL DEVELOPMENT COMPANY
805 Third Ave, 7th Floor
New York, NY 10022
TEL: 212-712-6000 FAX: 212-712-6100

ARCHITECT OF RECORD:
AAI ARCHITECTS, P.C.
14 Wall Street, 2nd Floor
New York, NY 10005
TEL: 212-964-4040 FAX: 212-964-4090

INTERIOR DESIGNER:
MEYER DAVIS
180 Varick St, suite 404
New York, NY 10014
TEL: 212-627-5574

LANDSCAPE DESIGNER:
WEST 8 URBAN DESIGN & LANDSCAPE ARCHITECTURE P.C.
333 Hudson Street, Suite 905
New York, NY 10013
TEL: 212-285-0088 FAX: 212-285-0228

STRUCTURAL ENGINEERS:
WSP
228 East 45th Street
New York, NY 10017
TEL: 212-687-9888 FAX: 646-487-5501

MEP ENGINEERS:
ICOR ASSOCIATES, LLC
485 C Route 1 South, Suite 200
Iseline, NJ 08830
TEL: 908-272-3300 FAX: 908-272-4440

GEOTECHNICAL ENGINEERS:
LANGAN ENGINEERING & ENVIRONMENTAL SERVICES
21 Penn Plaza - 360 West 31st Street, 8th Floor
New York, NY 10001
TEL: 212.479.5400 FAX: 212.479.5444

No.	DESCRIPTION:	DATE:
	CONCRETE BID PACKAGE	03-06-15
	ISSUE FOR CONSTRUCTION	03-18-16
1	ASI #68	07-01-16
	ISSUED FOR FILING	05-22-17

Discrepancies must be reported immediately to the Architect before proceeding. Only figured dimensions are to be used. Contractors must check all dimensions on site. This drawing is protected by copyright.

ALL DIMENSIONS ARE SHOWN IN IMPERIAL.

CONSULTANT: WSP

PROJECT:
252 SOUTH STREET
NEW YORK, NY

DRAWING TITLE:
TYPICAL MASONRY DETAILS 1

SEAL & SIGNATURE: STATE OF NEW YORK · AHMAD RAHIMIAN · No. 065537 · LICENSED PROFESSIONAL ENGINEER

DATE:	07/25/14
PROJECT No:	1302510
DRAWN: CADD	REV:
CHK: CL	
SCALE: N.T.S.	
DWG No:	S-985.01
DOB PAGE No:	of

DOB EMPLOYEE STAMP: Tina Mathew, RA · APPROVED Under Directive 2 of 1975 · AMENDED APPLICATION · Date: 10/23/2017 · NYC Development Hub

DOB B-SCAN:

30" x 42" Arch E1 - SHEET SIZE

FILE NAME:
PLOT DATE:

DEPT OF BLDGS121185529 Job Number
ES7784350648 Scan Code
30" x 42" Arch E1 - SHEET SIZE

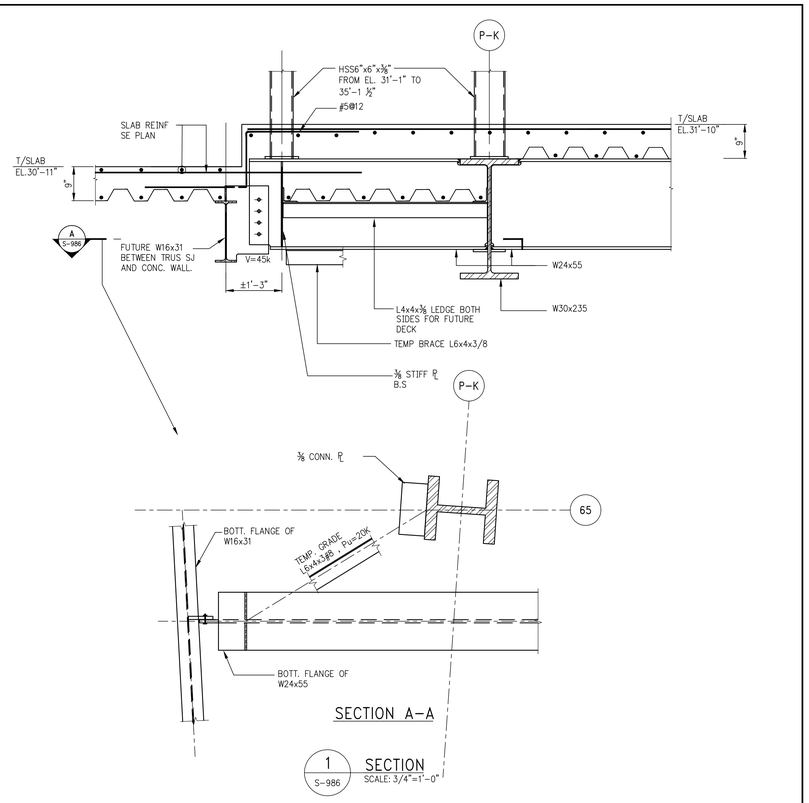

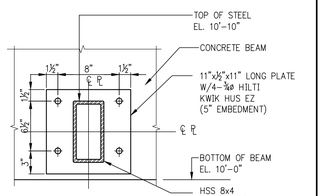

2 S-986 ELEVATION SCALE: 1 1/2"=1'-0"

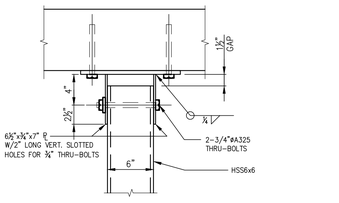

ELEVATION

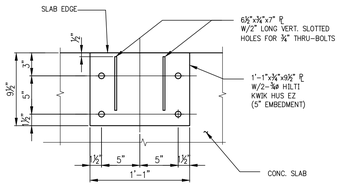

PLAN VIEW AT TOP

4 S-986 DETAIL SCALE: 1 1/2"=1'-0"

NOTE: FOR ORIENTATION SEE PLAN

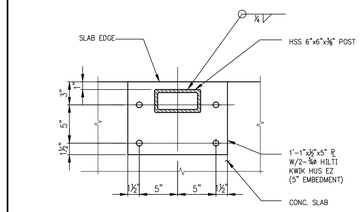

5 S-986 PLAN VIEW AT BASE SCALE: 1 1/2"=1'-0"

NOTE: FOR ORIENTATION SEE PLAN

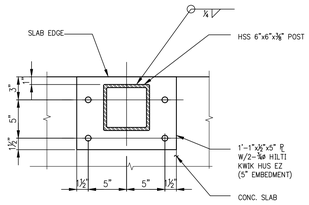

3 S-986 PLAN VIEW AT BASE SCALE: 1 1/2"=1'-0"

NOTE: FOR ORIENTATION SEE PLAN

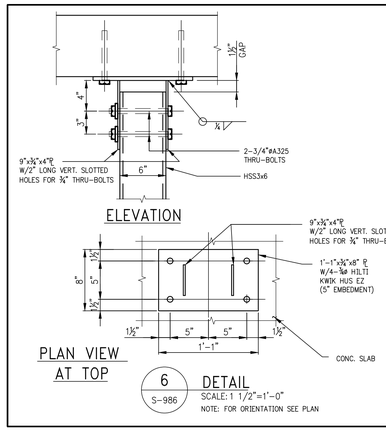

6 S-986 DETAIL SCALE: 1 1/2"=1'-0"

NOTE: FOR ORIENTATION SEE PLAN

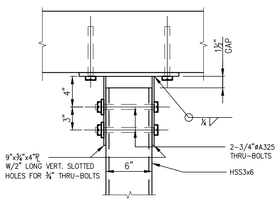

ELEVATION

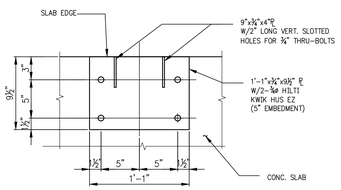

PLAN VIEW AT TOP

7 S-986 DETAIL SCALE: 1 1/2"=1'-0"

NOTE: FOR ORIENTATION SEE PLAN

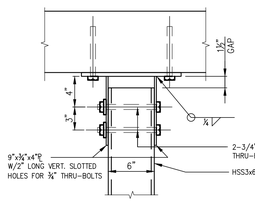

ELEVATION

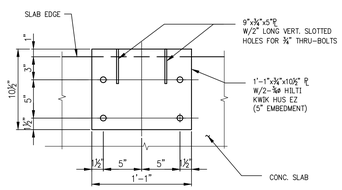

PLAN VIEW AT TOP

8 S-986 DETAIL SCALE: 1 1/2"=1'-0"

NOTE: FOR ORIENTATION SEE PLAN

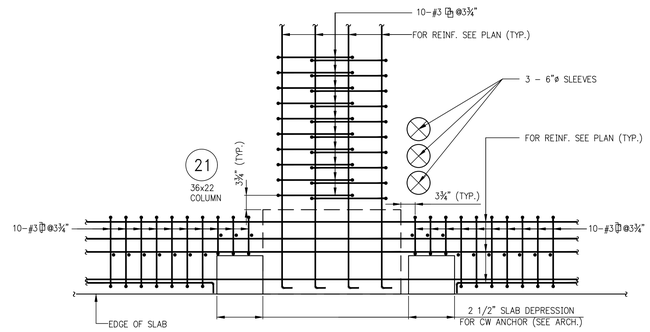

FROM 6TH FLOOR TO 17TH FLOOR

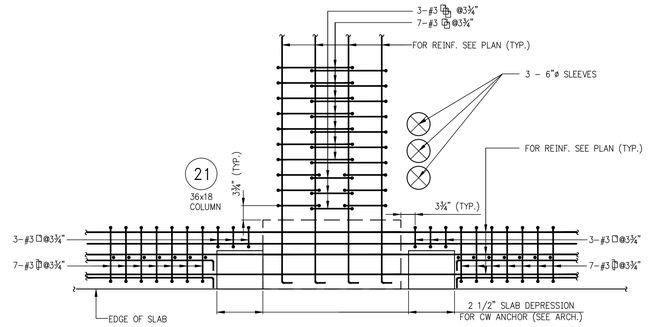

FROM 18TH FLOOR TO 26TH FLOOR

9 S-986 ADDITIONAL SHEAR REINF. AT COLUMN 21 SCALE: 3/4"=1'-0"

NOTE: SLAB REINF. NOT SHOWN

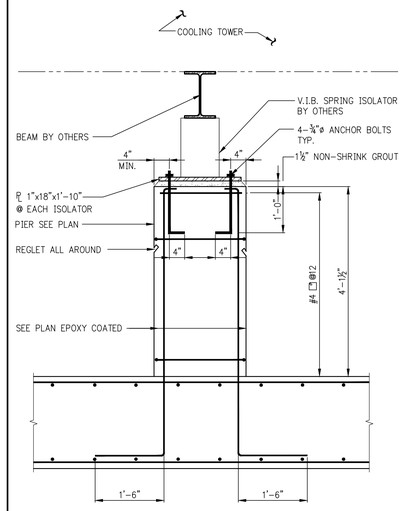

10 S-970 SECTION SCALE: ¾"=1'-0"

3

KEY PLAN:

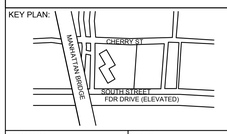

PROJECT NORTH | TRUE NORTH

DEVELOPER:
EXTELL DEVELOPMENT COMPANY
805 Third Ave, 7th Floor
New York, NY 10022
TEL: 212-712-6000 FAX: 212-712-6100

ARCHITECT OF RECORD:
AAI ARCHITECTS, P.C.
14 Wall Street, 2nd Floor
New York, NY 10005
TEL: 212-964-4040 FAX: 212-964-4090

INTERIOR DESIGNER:
MEYER DAVIS
180 Varick St, suite 404
New York, NY 10014
TEL: 212-627-5574

LANDSCAPE DESIGNER:
WEST 8 URBAN DESIGN & LANDSCAPE ARCHITECTURE P.C.
333 Hudson Street, Suite 905
New York, NY 10013
TEL: 212-285-0088 FAX: 212-285-0228

STRUCTURAL ENGINEERS:
WSP
228 East 45th Street
New York, NY 10017
TEL: 212-687-9888 FAX: 646-487-5501

MEP ENGINEERS:
ICOR ASSOCIATES, LLC
485 C Route 1 South, Suite 200
Iseline, NJ 08830
TEL: 908-272-3300 FAX: 908-272-4440

GEOTECHNICAL ENGINEERS:
LANGAN ENGINEERING & ENVIRONMENTAL SERVICES
21 Penn Plaza - 360 West 31st Street, 8th Floor
New York, NY 10001
TEL: 212.479.5400 FAX: 212.479.5444

No.	DESCRIPTION:	DATE:
1	ASI #71	07-29-16
2	ASI #73	08-19-16
3	ASI #88	04-14-17
	ISSUED FOR FILING	05-22-17

Discrepancies must be reported immediately to the Architect before proceeding. Only figured dimensions are to be used. Contractors must check all dimensions on site. This drawing is protected by copyright.

ALL DIMENSIONS ARE SHOWN IN IMPERIAL.

CONSULTANT: WSP

PROJECT:
252 SOUTH STREET
NEW YORK, NY

DRAWING TITLE:
SUPERSTRUCTURE SECTIONS 15

SEAL & SIGNATURE:

DATE:	07/25/14	
PROJECT No:	1302510	
DRAWN:	CADD	REV:
CHK:	CL	
SCALE:	N.T.S.	

DWG No: **S-986.00**

DOB PAGE No: of

DOB EMPLOYEE STAMP: DOB B-SCAN:

Tina Mathew, RA
APPROVED
Under Directive 2 of 1975
AMENDED APPLICATION
Date: 10/23/2017
NYC Development Hub

FILE NAME:
PLOT DATE:

DEPT OF BLDGS121185569 Job Number
E1391539777 Scan Code
30" x 42" Arch E1 - SHEET SIZE

NOT USED

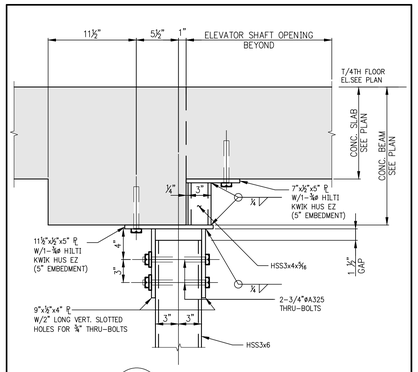

2 S-987 ELEVATION
SCALE: 1 1/2"=1'-0"

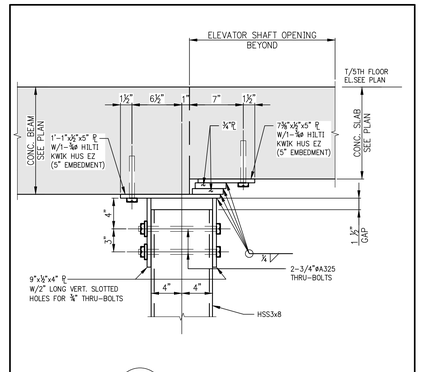

3 S-987 ELEVATION
SCALE: 1 1/2"=1'-0"

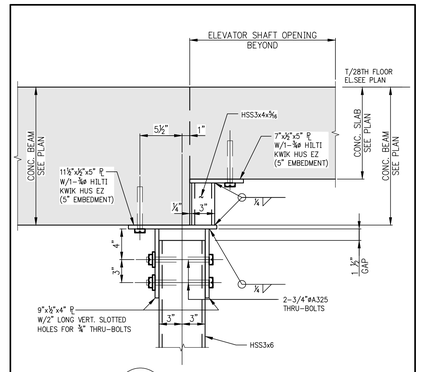

4 S-987 ELEVATION
SCALE: 1 1/2"=1'-0"

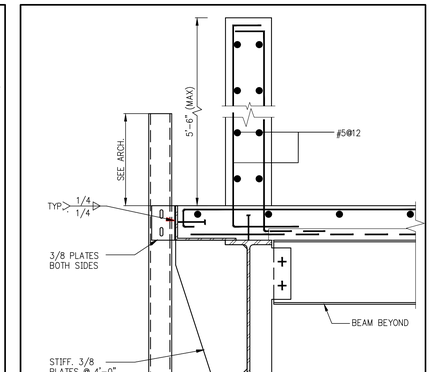

7 S-987 SECTION
SCALE: ¾"=1'-0"

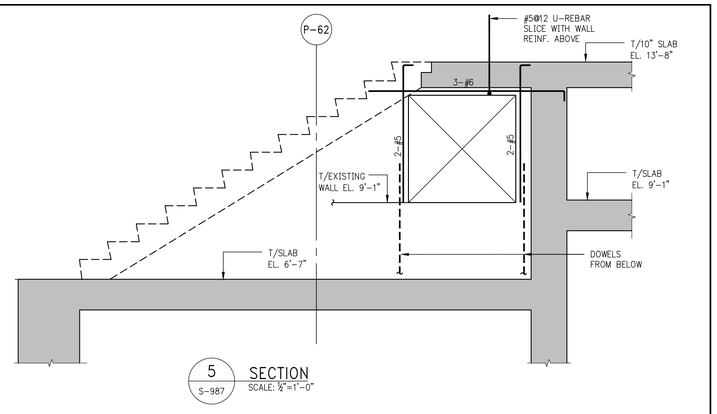

5 S-987 SECTION
SCALE: ½"=1'-0"

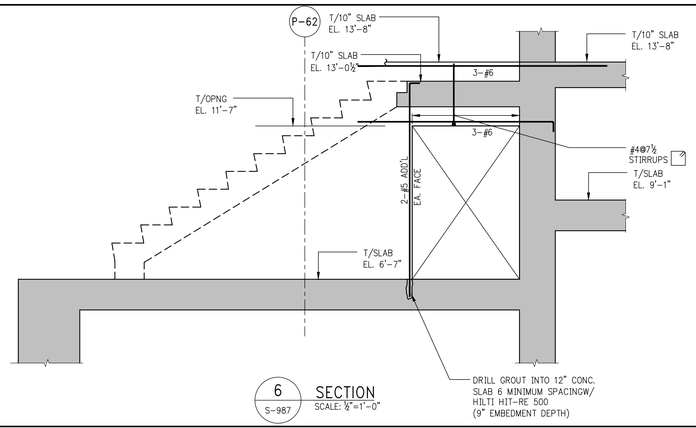

6 S-987 SECTION
SCALE: ½"=1'-0"

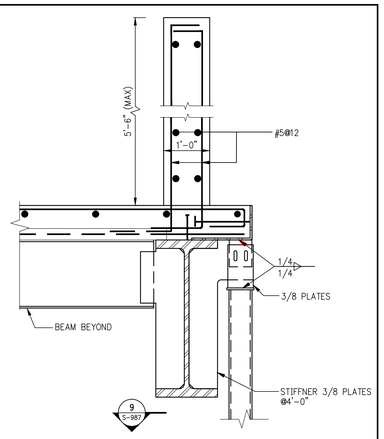

8 S-987 SECTION
SCALE: ¾"=1'-0"

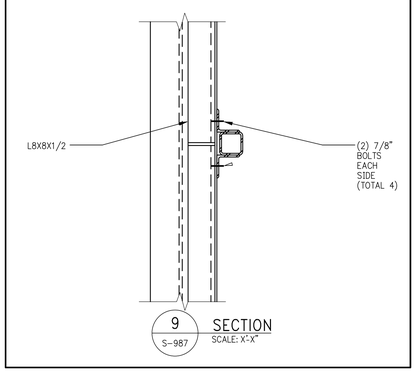

9 S-987 SECTION
SCALE: X'-X"

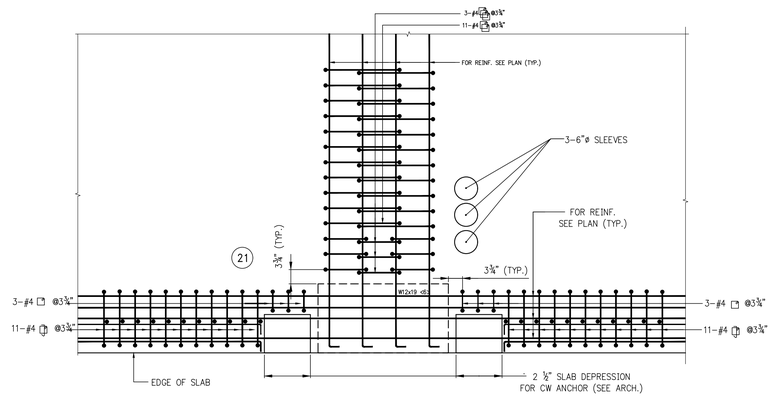

FROM 29TH FLOOR TO 48TH FLOOR
FROM 51ST FLOOR TO 59TH FLOOR

10 S-987 ADDITIONAL SHEAR REINF. AT COLUMN 21
SCALE: ¾"=1'-0"

NOTE: SLAB REINF. NOT SHOWN

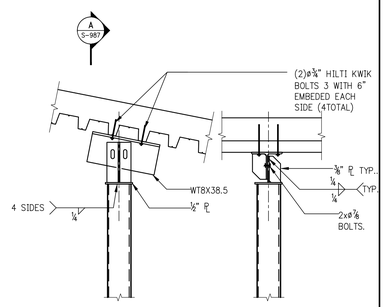

SECTION A

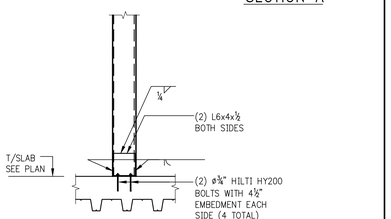

11 S-987 SECTION
SCALE: ¾"=1'-0"

KEY PLAN:

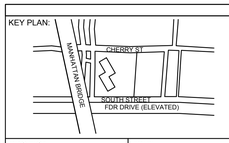

PROJECT NORTH | TRUE NORTH

DEVELOPER:
EXTELL DEVELOPMENT COMPANY
805 Third Ave, 7th Floor
New York, NY 10022
TEL: 212-712-6000 FAX: 212-712-6100

ARCHITECT OF RECORD:
AAI ARCHITECTS, P.C.
14 Wall Street, 2nd Floor
New York, NY 10005
TEL: 212-964-4040 FAX: 212-964-4090

INTERIOR DESIGNER:
MEYER DAVIS
180 Varick St, suite 404
New York, NY 10014
TEL: 212-627-5574

LANDSCAPE DESIGNER:
WEST 8 URBAN DESIGN & LANDSCAPE ARCHITECTURE P.C.
333 Hudson Street, Suite 905
New York, NY 10013
TEL: 212-285-0088 FAX: 212-285-0228

STRUCTURAL ENGINEERS:
WSP
228 East 45th Street
New York, NY 10017
TEL: 212-687-9888 FAX: 646-487-5501

MEP ENGINEERS:
ICOR ASSOCIATES, LLC
485 C Route 1 South, Suite 200
Iselin, NJ 08830
TEL: 908-272-3300 FAX: 908-272-4440

GEOTECHNICAL ENGINEERS:
LANGAN ENGINEERING & ENVIRONMENTAL SERVICES
21 Penn Plaza - 360 West 31st Street, 8th Floor
New York, NY 10001
TEL: 212.479.5400 FAX: 212.479.5444

No.	DESCRIPTION:	DATE:
1	ASI #73	08-19-16
2	ASI #74	09-16-16
3	ASI #75	10-10-16
4	ASI #76	10-28-16
5	ASI #82	01-16-17
	ISSUED FOR FILING	05-22-17

Discrepancies must be reported immediately to the Architect before proceeding. Only figured dimensions are to be used. Contractors must check all dimensions on site. This drawing is protected by copyright.

ALL DIMENSIONS ARE SHOWN IN IMPERIAL.

CONSULTANT: WSP

PROJECT:
252 SOUTH STREET
NEW YORK, NY

DRAWING TITLE:
SUPERSTRUCTURE SECTIONS 16

SEAL & SIGNATURE:

DATE:	07/25/14
PROJECT No:	1302510
DRAWN: CADD	REV:
CHK: CL	
SCALE:	
DWG No:	**S-987.00**
DOB PAGE No:	of

DOB EMPLOYEE STAMP:

DOB B-SCAN:

FILE NAME:
PLOT DATE:

DEPT OF BLDGS121185028 Job Number
ES5703205482 Scan Code

30" x 42" Arch E1 - SHEET SIZE

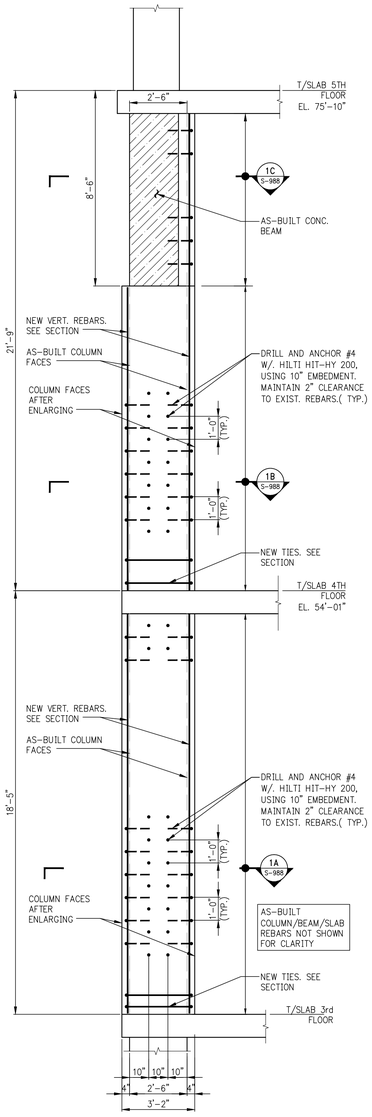

1 S-988 COL. 8 ELEVATION
SCALE: 3/8"=1'-0"

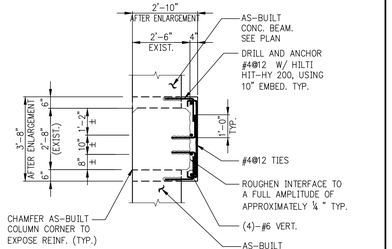

1C S-988 COLUMN 8 UNDER 5TH FLOOR
SCALE: 3/8"=1'-0"

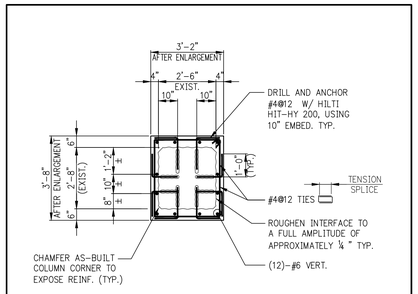

1B S-988 COLUMN 8 UNDER 5TH FLOOR
SCALE: 3/8"=1'-0"

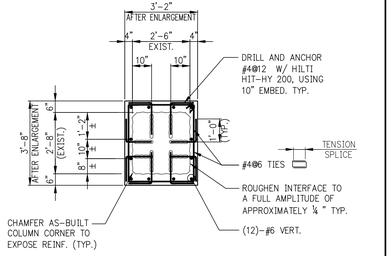

1A S-988 COLUMN 8 UNDER 5TH FLOOR
SCALE: 3/8"=1'-0"

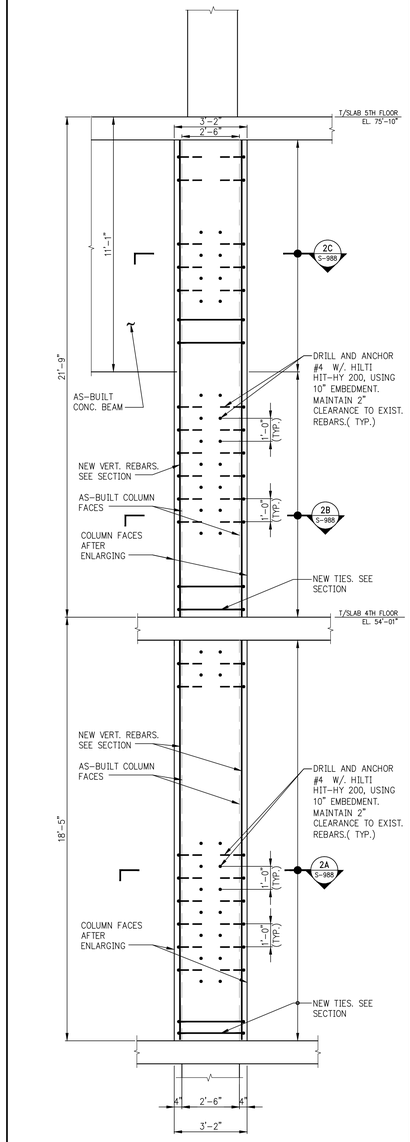

2 S-988 COL. 27 ELEVATION
SCALE: 3/8"=1'-0"

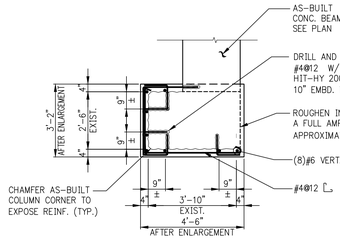

2C S-988 COLUMN 28 UNDER 5TH FLOOR
SCALE: 3/8"=1'-0"

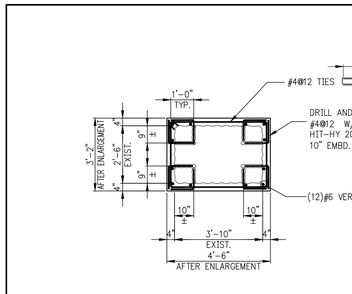

2B S-988 COLUMN 27 BETWEEN 3RD AND 4TH FL.
SCALE: 3/8"=1'-0"

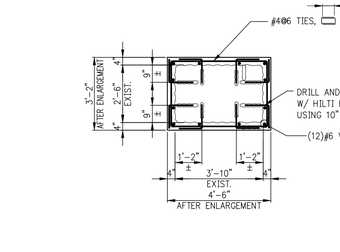

2A S-988 COLUMN 27 BETWEEN 3RD AND 4TH FL.
SCALE: 3/8"=1'-0"

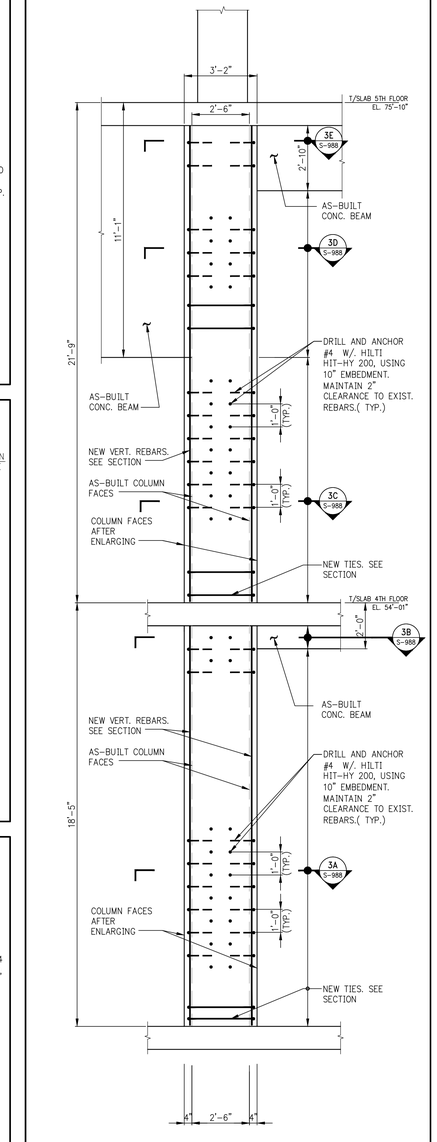

3 S-988 COL. 28 ELEVATION
SCALE: 3/8"=1'-0"

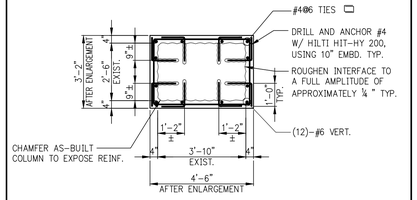

3A S-988 COLUMN 28 BETWEEN 3RD and 4TH FL.
SCALE: 3/8"=1'-0"

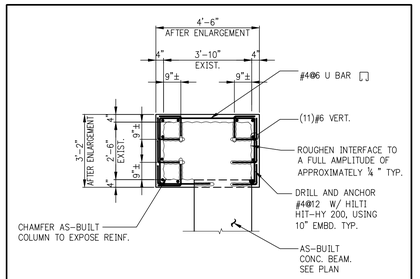

3B S-988 COLUMN 28 UNDER 5TH FLOOR
SCALE: 3/8"=1'-0"

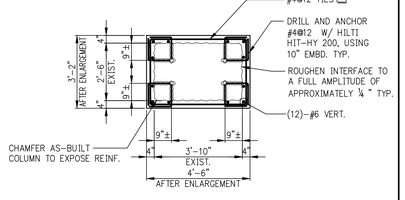

3C S-988 COLUMN 28 BETWEEN 3RD AND 4TH FL.
SCALE: 3/8"=1'-0"

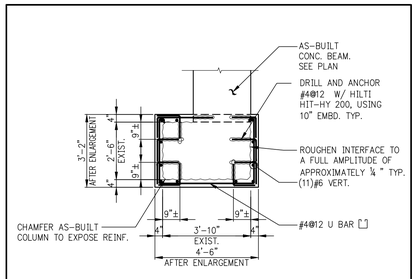

3D S-988 COLUMN 28 UNDER 5TH FLOOR
SCALE: 3/8"=1'-0"

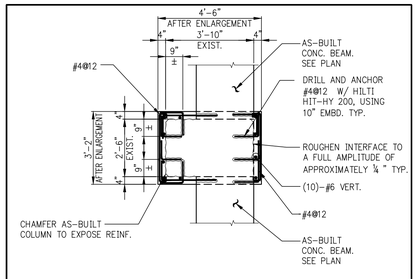

3E S-988 COLUMN 28 UNDER 5TH FLOOR
SCALE: 3/8"=1'-0"

PROJECT NORTH | TRUE NORTH

DEVELOPER:
EXTELL DEVELOPMENT COMPANY
805 Third Ave, 7th Floor
New York, NY 10022
TEL: 212-712-6000 FAX: 212-712-6100

ARCHITECT OF RECORD:
AAI ARCHITECTS, P.C.
14 Wall Street, 2nd Floor
New York, NY 10005
TEL: 212-964-4040 FAX: 212-964-4090

INTERIOR DESIGNER:
MEYER DAVIS
180 Varick St, suite 404
New York, NY 10014
TEL: 212-627-5574

LANDSCAPE DESIGNER:
WEST 8 URBAN DESIGN & LANDSCAPE ARCHITECTURE P.C.
333 Hudson Street, Suite 905
New York, NY 10013
TEL: 212-285-0088 FAX: 212-285-0228

STRUCTURAL ENGINEERS:
WSP
228 East 45th Street
New York, NY 10017
TEL: 212-687-9888 FAX: 646-487-5501

MEP ENGINEERS:
ICOR ASSOCIATES, LLC
485 C Route 1 South, Suite 200
Iselin, NJ 08830
TEL: 908-272-3300 FAX: 908-272-4440

GEOTECHNICAL ENGINEERS:
LANGAN ENGINEERING & ENVIRONMENTAL SERVICES
21 Penn Plaza - 360 West 31st Street, 8th Floor
New York, NY 10001
TEL: 212.479.5400 FAX: 212.479.5444

No.	DESCRIPTION:	DATE:
1	ASI #81	12-22-12
	ISSUED FOR FILING	05-22-17

Discrepancies must be reported immediately to the Architect before proceeding. Only figured dimensions are to be used. Contractors must check all dimensions on site. This drawing is protected by copyright.

ALL DIMENSIONS ARE SHOWN IN IMPERIAL.

CONSULTANT: WSP

PROJECT:
252 SOUTH STREET
NEW YORK, NY

DRAWING TITLE:
SUPERSTRUCTURE SECTIONS 17

SEAL & SIGNATURE:
STATE OF NEW YORK · AHMAD RAMADAN · No. 085037 · LICENSED PROFESSIONAL ENGINEER

DATE:	07/25/14
PROJECT No:	1302510
DRAWN: CADD	REV:
CHK: CL	
SCALE:	
DWG No:	S-988.00
DOB PAGE No:	of

DOB EMPLOYEE STAMP:
Tina Mathew, RA
APPROVED
Under Directive 2 of 1975
AMENDED APPLICATION
Date: 10/23/2017
NYC Development Hub

DOB B-SCAN:

FILE NAME:
PLOT DATE:

DEPT OF BLDGS121185539 Job Number
E389994671 Scan Code
30" x 42" Arch E1 SHEET SIZE

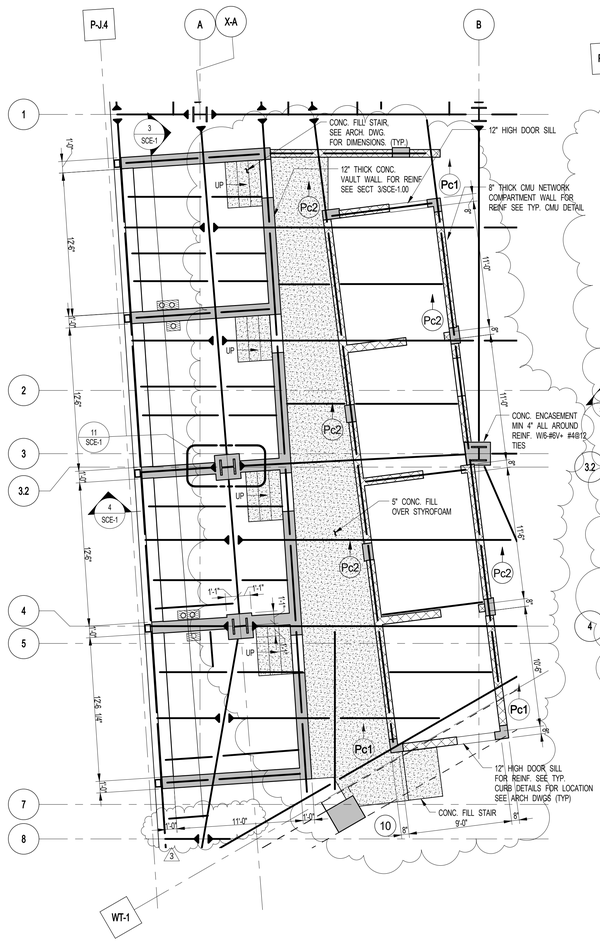

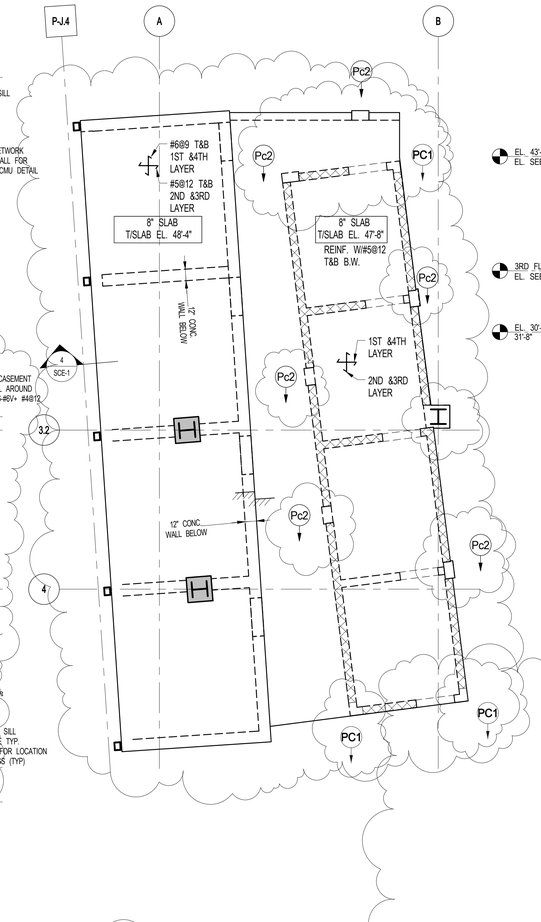

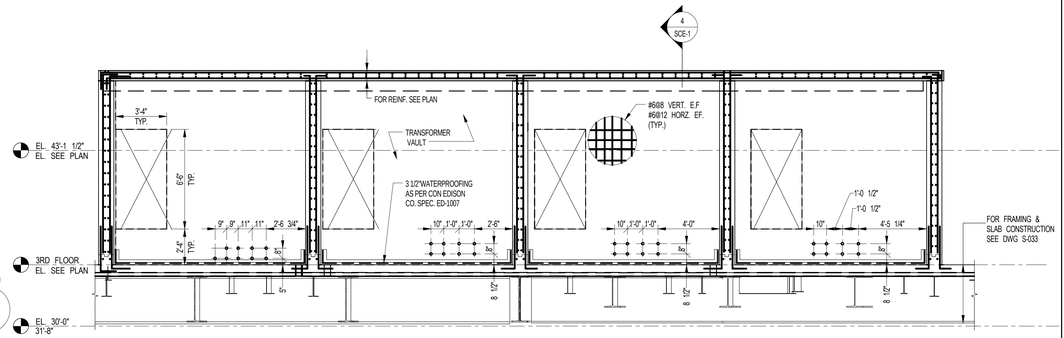

3 SCE-1 SECTION
SCALE: 1/4" = 1'-0"

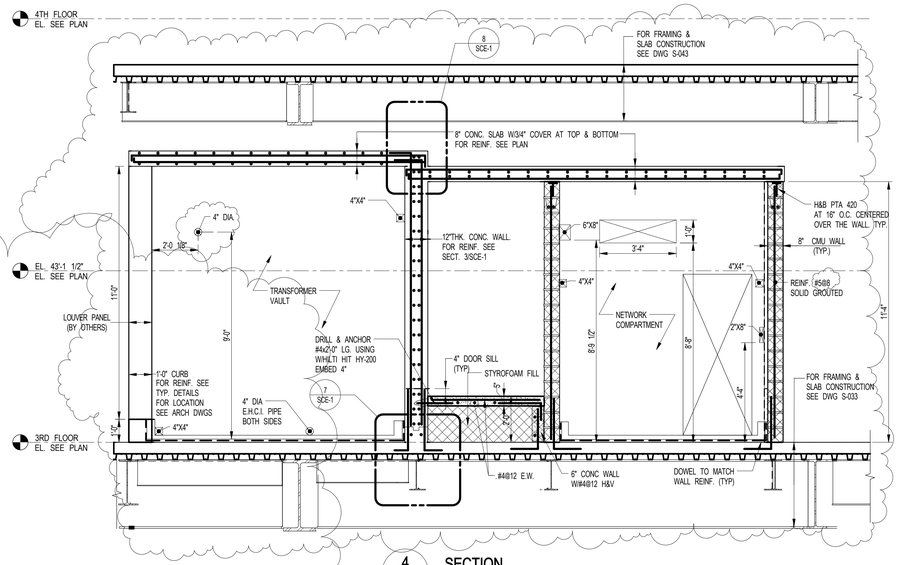

4 SCE-1 SECTION
SCALE: 3/8" = 1'-0"

1 SCE-1 3RD FLOOR PART PLAN-VAULT @ TRANSFORMER & NETWORK COMPARTMENT
SCALE: 3/16" = 1'-0"
NOTE: FOR 3RD FLOOR FRAMING SEE DWG. S-033

2 SCE-1 ROOF PART PLAN-VAULT & NETWORK COMPARTMENT
SCALE: 3/16" = 1'-0"

NOTE:
Pc1 SEE DETAIL DWG 6/SCE-1
Pc2 INDICATE 10x18 POST REINF. W/4-#6 V+#3@6 TIES

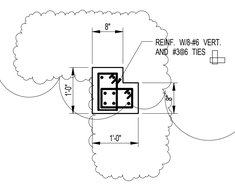

6 SCE-1 L-SHAPE CORNER COLUMN (PC1) DETAIL
SCALE: 3/4" = 1'-0"

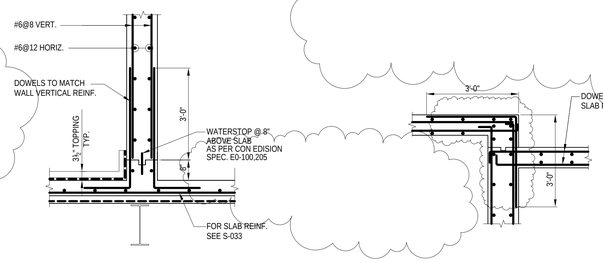

7 SCE-1 TRANSFORMER VAULT DETAIL
SCALE: 1/2" = 1'-0"

8 SCE-1 DETAIL
SCALE: 1/2" = 1'-0"

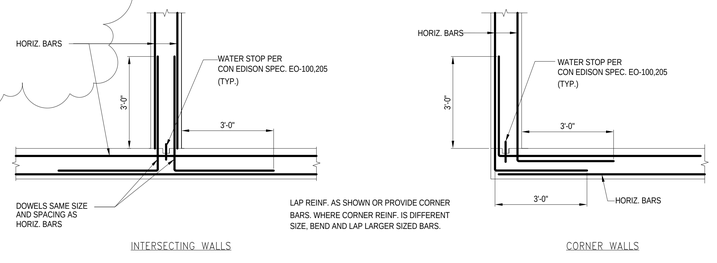

9 SCE-1 TYPICAL WALL INTERSECTION DETAILS
SCALE: 1/2" = 1'-0"

MATERIAL SPECIFICATIONS:

ALL REINFORCING BARS SHALL BE BILLET STEEL, INTERMEDIATE GRADE, DEFORMED, AND SHALL CONFORM TO A.S.T.M. SPEC. DES. A-615 GRADE 60.
REINFORCING BARS SHALL BE EPOXY-COATED IN ACCORDANCE WITH A.S.T.M. SPEC. A-775.
REINFORCING BARS SHALL BE WIRE TIED AT ALL CONTACT POINTS WITH PLASTIC COATED TIE WIRE.
REINFORCEMENT SUPPORTED FROM FORMWORK SHALL REST ON COATED WIRE BAR SUPPORTS.
EPOXY COATING DAMAGED AS A RESULT OF HANDLING OR CUTTING OF REBARS SHALL BE REPAIRED WITH PATCHING MATERIAL CONFORMING TO A.S.T.M. SPEC. A-775 STRUCTURAL STEEL SHALL CONFIRM TO A.S.T.M. A992 GRADE 50 (Fy=50 KSI) AND PLATES SHALL CONFORM TO A.S.T.M. A572 GRADE 50 (Fy=50KSI)

CONSTRUCTION SPECIFICATION:

ALL CONCRETE SHALL BE NORMAL WEIGHT CONTROLLED CONCRETE (f'c=5,000 P.S.I) TYPE 1. AND COMPLY WITH A.C.I. BUILDING CODE AND 2008 NEW YORK CITY BUILDING CODE.
ALL CONCRETE MATERIAL FOR CONSTRUCTION AND PROTECTION FOR REINFORCING BARS SHALL CONFORM TO NYC BLDG. CODE 2008 AND ACI 318-08 CEMENT MORTAR SHALL BE IN ACCORDANCE WITH CON EDISON CO. SPEC. EO-100-167.
ALL REINFORCING BARS SHALL HAVE 2" MINIMUM CONCRETE PROTECTION UNLESS OTHERWISE NOTED. THE USE OF FORM TIES IS NOT ALLOWED.
DO NOT USE FLY ASH OR SLAG IN CONCRETE. FLOOR AND EXTERIOR WALLS SHALL BE POURED CONTINUOUSLY UP TO THE HORIZONTAL WALL KEYS TO FORM MONOLITHIC STRUCTURE. (SEE TRANSFORMER VAULT DETAIL ON THIS SHEET.)
INSTALL 2 NO. 5 BARS ABOVE ALL WALL OPENINGS.

SPECIAL INSPECTION

-STRUCTURAL STEEL-WELDING - 1704.3.1
-STRUCTURAL STEEL-ERECTION & BOLTING - 1704.3.3
-CONCRETE-CAST-IN-PLACE - 1704.4
-CONCRETE TEST CYLINDERS * (TR-2) - 1905.6
-CONCRETE DESIGN MIX * (TR-3) - 1905.3
-MASONRY - 1704.5

PROGRESS INSPECTION
-FINAL -28-116.2.4.2 & 109.5 & DIRECTIVE 14 (1975)

*THESE TESTS MUST BE PERFORMED BY A LICENSED CONCRETE TESTING LAB

NOTES:

1. REFER TO THE PROJECT SPECIFICATIONS FOR ADDITIONAL INFORMATION ON SCOPE AND DETAILED REQUIREMENTS FOR INSPECTIONS.
2. ALL SPECIAL INSPECTIONS SHALL BE PERFORMED UNDER THE SUPERVISION OF A PROFESSIONAL ENGINEER LICENSED IN THE STATE OF NEW YORK.
3. REPORTS OF RESULTS SHALL BE SUBMITTED TO THE OWNER AND ARCHITECT FOR REVIEW. SIGNED COPIES OF ALL TESTS AND INSPECTION REPORTS SHALL BE FILED WITH THE BUILDING DEPARTMENT (THROUGH THE APPLICANT).
4. REPORTS SHALL STATE WHETHER RESULTS COMPLY WITH CONTRACT REQUIREMENTS, SUMMARIZE THE TYPE OF TEST, THE LOCATION OR COMPONENT TESTED, AND RECOMMEND ANY REMEDIAL MEASURES REQUIRED. REPORT SHOULD NOTE ANY OTHER DEVIATIONS FROM THE CONTRACT DOCUMENTS.
5. FOR ITEMS OF WORK OF OTHER TRADES WHICH ARE SUBJECT TO SPECIAL INSPECTION, SEE THE CITY OF NEW YORK BUILDING CODE, AS WELL AS ARCHITECTURAL, MECHANICAL, ELECTRICAL, PLUMBING, ETC. DRAWINGS AND SPECIFICATIONS.

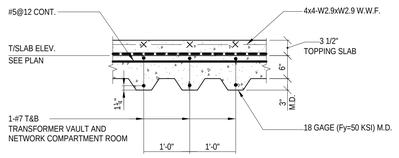

10 SCE-1 TYPICAL SLAB ON METAL DECK
SCALE: 3/4" = 1'-0"
NOTE:
1. REINFORCING SHALL BE DEVELOPED 5'-0" BEYOND THE NEAREST BEAMS SHOWN OUTSIDE THE SHADED AREAS ON PLAN.

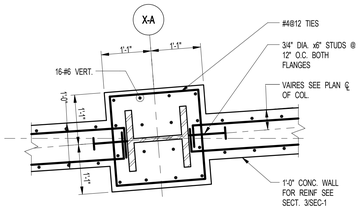

11 SCE-1 TYPICAL CONCRETE ENCASEMENT DETAIL FOR COLUMNS INSIDE THE VAULT
SCALE: 3/4" = 1'-0"

KEY PLAN:
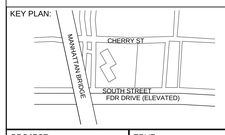

PROJECT NORTH | TRUE NORTH

DEVELOPER:
EXTELL DEVELOPMENT COMPANY
805 Third Ave, 7th Floor
New York, NY 10022
TEL: 212-712-6000 FAX: 212-712-6100

ARCHITECT OF RECORD:
AAI ARCHITECTS, P.C.
14 Wall Street, 2nd Floor
New York, NY 10005
TEL: 212-964-4040 FAX: 212-964-4090

INTERIOR DESIGNER:
MEYER DAVIS
180 Varick St, suite 404
New York, NY 10014
TEL: 212-627-5574

LANDSCAPE DESIGNER:
WEST 8 URBAN DESIGN & LANDSCAPE ARCHITECTURE P.C.
333 Hudson Street, Suite 905
New York, NY 10013
TEL: 212-285-0088 FAX: 212-285-0228

STRUCTURAL ENGINEERS:
WSP
228 East 45th Street
New York, NY 10017
TEL: 212-687-9888 FAX: 646-487-5501

MEP ENGINEERS:
ICOR ASSOCIATES, LLC
485 C Route 1 South, Suite 200
Iseline, NJ 08830
TEL: 908-272-3300 FAX: 908-272-4440

GEOTECHNICAL ENGINEERS:
LANGAN ENGINEERING & ENVIRONMENTAL SERVICES
21 Penn Plaza - 360 West 31st Street, 8th Floor
New York, NY 10001
TEL: 212.479.5400 FAX: 212.479.5444

No.	DESCRIPTION:	DATE:
	ADDENDUM #5	05-01-15
	ADDENDUM #10	07-20-15
	ISSUED FOR FILING	07-28-15
	ASI #56	02-19-16
	ISSUE FOR CONSTRUCTION	03-18-16
1	ASI#61	04-22-16
2	ISSUED FOR CON-ED REVIEW	12-15-16
3	ASI #81	12-22-16
	ISSUED FOR FILING	05-22-17

Discrepancies must be reported immediately to the Architect before proceeding. Only figured dimensions are to be used. Contractors must check all dimensions on site. This drawing is protected by copyright.

ALL DIMENSIONS ARE SHOWN IN IMPERIAL.

CONSULTANT: WSP

PROJECT:
252 SOUTH STREET
NEW YORK, NY

DRAWING TITLE:
CON-ED TRANSFORMER WALL PLAN SECTIONS

SEAL & SIGNATURE: STATE OF NEW YORK · ARMAD RAINCHIK · No. 065037 · LICENSED PROFESSIONAL ENGINEER

DATE:	04/30/15
PROJECT No:	1302510
DRAWN: CAD	REV:
CHK: CL	
SCALE: As indicated	
DWG No:	**SCE-1.01**
DOB PAGE No:	of

DOB EMPLOYEE STAMP: Tina Mathew, RA — APPROVED Under Directive 2 of 1975 AMENDED APPLICATION Date: 10/23/2017 NYC Development Hub

DOB B-SCAN:

FILE NAME:
PLOT DATE:

30" x 42" Arch E1 - SHEET SIZE

DEPT OF BLDGS121305628 Job Number
E1508535500 Scan Code

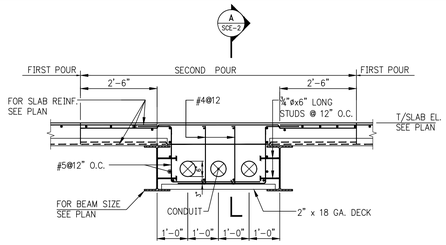

TYPICAL DETAIL 1 OF CONDUIT ENCASEMENT AND SUPPORT FOR CUSTOMER FEEDERS

NOTES:
1. FOR LOCATION AND LAYOUT OF CONDUITS SEE ARCHITECTURAL AND MECHANICAL DRAWINGS.
2. FIREPROOF AS REQ'D.
3. EMF SHIELDING AS REQ'D.
4. CONDUITS TO BE SUPPORTED BY OTHERS.

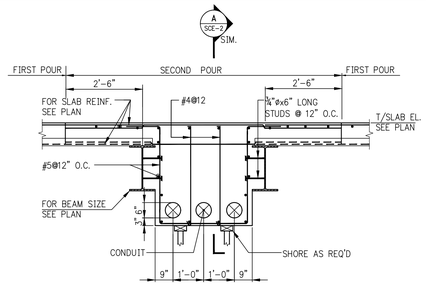

TYPICAL DETAIL 2 OF CONDUIT ENCASEMENT AND SUPPORT FOR CUSTOMER FEEDERS

NOTE:
FOR BALANCE OF INFO SEE TYP. DETAIL 1, THIS SHEET

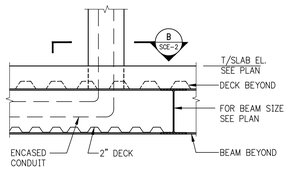

A SCE-2 SECTION
SCALE: N.T.S.

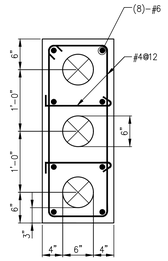

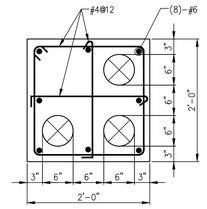

B SCE-2 SECTION
SCALE: N.T.S.

KEY PLAN:

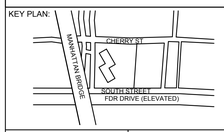

PROJECT NORTH | TRUE NORTH

DEVELOPER:
EXTELL DEVELOPMENT COMPANY
805 Third Ave, 7th Floor
New York, NY 10022
TEL: 212-712-6000 FAX: 212-712-6100

ARCHITECT OF RECORD:
AAI ARCHITECTS, P.C.
14 Wall Street, 2nd Floor
New York, NY 10005
TEL: 212-964-4040 FAX: 212-964-4090

INTERIOR DESIGNER:
MEYER DAVIS
180 Varick St, suite 404
New York, NY 10014
TEL: 212-627-5574

LANDSCAPE DESIGNER:
WEST 8 URBAN DESIGN & LANDSCAPE ARCHITECTURE P.C.
333 Hudson Street, Suite 905
New York, NY 10013
TEL: 212-285-0088 FAX: 212-285-0228

STRUCTURAL ENGINEERS:
WSP
228 East 45th Street
New York, NY 10017
TEL: 212-687-9888 FAX: 646-487-5501

MEP ENGINEERS:
ICOR ASSOCIATES, LLC
485 C Route 1 South, Suite 200
Iselin, NJ 08830
TEL: 908-272-3300 FAX: 908-272-4440

GEOTECHNICAL ENGINEERS:
LANGAN ENGINEERING & ENVIRONMENTAL SERVICES
21 Penn Plaza - 360 West 31st Street, 8th Floor
New York, NY 10001
TEL: 212.479.5400 FAX: 212.479.5444

No.	DESCRIPTION:	DATE:
	90% CONSTRUCTION DOCUMENTS	01-15-16
	ISSUE FOR CONSTRUCTION	03-18-16
1	ASI#67	06-17-16
2	ASI#74	09-16-16
	ISSUED FOR FILING	05-22-17

Discrepancies must be reported immediately to the Architect before proceeding. Only figured dimensions are to be used. Contractors must check all dimensions on site. This drawing is protected by copyright.

ALL DIMENSIONS ARE SHOWN IN IMPERIAL.

CONSULTANT: WSP

PROJECT:
252 SOUTH STREET
NEW YORK, NY

DRAWING TITLE:
TYPICAL CONDUIT ENCASEMENT AND SUPPORT DETAILS

SEAL & SIGNATURE:
STATE OF NEW YORK · AHMAD RAHIMIAN · No. 065057 · LICENSED PROFESSIONAL ENGINEER

DATE:	07/25/14
PROJECT No:	1302510
DRAWN: CADD	REV:
CHK: CL	
SCALE: N.T.S.	
DWG No:	**SCE-2.00**
DOB PAGE No:	of

DOB EMPLOYEE STAMP:
Tina Mathew, RA
APPROVED
Under Directive 2 of 1975
AMENDED APPLICATION
Date: 10/23/2017
NYC Development Hub

DOB B-SCAN:

FILE NAME:
PLOT DATE:

1 (S-010) **1ST FLOOR OVERALL FRAMING PLAN**

SCALE: 1/16" = 1'-0"

NOTE:
FOR ALL EXTERIOR SLABS - SLAB THICKNESSES SHOWN IS MINIMUM REQUIRED, MANTAIN LEVEL SOFFIT AND COORDINATE SLOPING TOP OF SLAB / PITCH TO DRAIN WITH ARCHITECTURAL / LANDSCAPING DRAWINGS.

NOTE FOR:
PARKING FLOORS, RAMPS, DRIVEWAYS EXPOSED TOPPING, SIDE WALKS - ALL DIRECTLY EXPOSED TO CARS AND/OR PEDESTRIAN TRAFFIC.
1. DCI (CALCIUM NITRITE) CORROSION INHIBITOR, (4.0 GAL/YD3)
2. WATER/CEMENT RATIO NOT TO EXCEED 0.40
3. USE OF SUPERPLASTICIZER TO ACHIEVE THE W/C RATIO.
4. CONCRETE TO CONTAIN SILICIA FUME (5% OF TOTAL CEMENT) OR SLAG (40%)
5. 1.5 LBS/YD3 FIBER MESH.
6. ENTRAINED AIR AT 6% ± 1.
7. ALL TOP & BOTTOM REBAR SHALL BE EPOXY COATED.
8. ALL CONSTRUCTION JOINTS SHALL HAVE WATER STOP AS PER DETAIL ON S-962.
9. THE CURING SHALL BE ONLY MOIST TYPE. NO CURING COMPOUND ACCEPTABLE.
10. ALTHOUGH PROTECTIVE MEASURES WERE INCORPORATED IN THE DESIGN OF THE PARKING AREAS AND RAMPS, THESE AREAS MUST BE CAREFULLY MAINTAINED IN ORDER TO PREVENT EARLY DETERIORATION.

NOTES:

1. TOP OF SLAB ELEVATION TO BE 13'-4" U.O.N. THUS [......] ON PLAN.
2. SLAB TO BE 12" THICK U.O.N. THUS [......] ON PLAN.
3. CONCRETE STRENGTH f'c, OF SLAB SHALL BE 8,600 psi
4. BOTTOM REINFORCEMENT TO BE: #5@12 CONT. E.W. FOR 12" SLAB AND 14" SLAB
   #5@10 CONT. EW. FOR 16" SLAB.
   #6@12 CONT. EW. FOR 20" SLAB.
5. LOCATION AND QUANTITY OF SLEEVES, FLOOR DRAINS, WALL PENETRATIONS, ETC TO BE COORDINATED WITH ARCH. AND MECH. DRAWINGS
6. FOR SIZE AND LOCATION OF CURBS SEE ARCH. DWGS. FOR REINF. SEE TYPICAL DETAILS ON S-967.
7. PROVIDE HOUSEKEEPING PADS BENEATH MECHANICAL EQUIPMENT AS REQUIRED. COORDINATE SIZE, THICKNESS AND LOCATION WITH MECHANICAL DRAWINGS. SEE TYPICAL DETAIL ON S-967.
8. * INDICATES SEISMIC / WIND BARS.
9. FOR DETAILS OF INTEGRITY REINFORCEMENT, SEE DWG. S-965
10. FOR DEPRESSION @ BUILDING PERIMETER (SPANDREL DETAIL) SEE S-965.
11. FOR SHEARWALL DETAILS ELEVATION AND REINFORCEMENT SEE S-800 AND S-940 SERIES DWG'S.
12. FOR COLUMN SCHEDULE AND DETAILS SEE S-950 SERIES DWG'S.
13. FOR TYPICAL SUPERSTRUCTURE DETAILS SEE S-960 SERIES DWG'S
14. FOR SUPERSTRUCTURE SECTIONS SEE S-970 SERIES DRAWINGS.
15. FOR STAIR SECTIONS AND TYPICAL DETAIL SEE S-980 SERIES DRAWINGS.
16. ALL REINF. AT EXPOSED CONCRETE ELEMENTS (COLUMNS, WALLS, BEAMS, SLAB & TIES) SHALL BE EPOXY COATED. REBARS IN SWIMMING POOL REGION (BEAM & SLAB ABOVE THE POOL, WALL, BEAM & SLAB @ SIDE OF POOL) SHALL BE EPOXY COATED.
17. FOR GENERAL NOTES AND LEGEND SEE FO-001 AND FO-002.

ADD'L STEEL FRAMING NOTES:

1. COMPOSITE SLAB CONSTRUCTION SHALL BE 6 " NORMAL WEIGHT CONCRETE ON TOP OF 3" DEEP 18GA (Fy=50 KSI) COMPOSITE GALVANIZED METAL DECK (TOTAL SLAB DEPTH= 9"), REINFORCED WITH #5@12 TOP E.W. + #4@12 BOTTOM (FLUTE) (CONCRETE f'c=4000psi AT 28 DAYS) U.O.N.
2. TOP OF STEEL TO BE 9" BELOW TOP OF SLAB ELEVATION SPECIFIED IN NOTE 1 U.O.N. THUS (±...) INDICATING DISTANCE ABOVE OR BELOW TOP OF SLAB ELEVATION.
3. STUDS SHALL BE ¾"Ø x 5" LONG. ALL STEEL BEAMS SHALL HAVE MIN. 1 STUD/FT. U.O.N. THUS <...> ON PLAN.
4. ALL BEAM CONNECTIONS SHALL DEVELOP AXIAL FORCE OF P=75k, GIRDERS (SUPPORTING OTHER MEMBERS) P=150K AT EACH END U.O.N. ON PLAN, IN ADDITION TO ALL OTHER LOADS.
5. FOR BEAM REACTIONS NOT SHOWN USE A MINIMUM OF 30 KIPS FOR BEAMS LESS THAN 15 FEET LONG.

LEGEND:

TEx - INDICATES EMBEDMENT PLATE REQUIRED FOR STEEL BEAM CONNECTION TO CONCRETE COLUMN

- P1 INDICATES HSS10X10X5/8 POST.
- P1A INDICATES W12X120 POST.
- P2 INDICATES W8X28 POST.
- P3 INDICATES W12X65 POST.
- P4 INDICATES HSS6X6X3/8 POST.
- P5 INDICATES W10X45 POST.
- P6 INDICATES HSS8X8X1/2 POST.
- P7 INDICATES HSS9X7X1/2 POST.
- H1 INDICATES W12X65 HANGER.
- H2 INDICATES HSS6X6X3/8 HANGER.
- H3 INDICATES HSS8X8X1/2 HANGER.
- BP1 INDICATES BEARING PLATE, SEE FO-300 FOR DETAILS
- BP2 INDICATES BEARING PLATE, SEE FO-300 FOR DETAILS

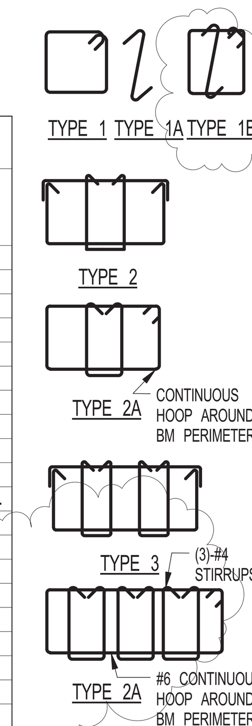

STIRRUP TYPES

1ST FLOOR BEAM SCHEDULE

BEAM MARK	SIZE WIDTH	SIZE DEPTH	REINFORCEMENT BOTTOM CONTINUOUS	REINFORCEMENT TOP CONTINUOUS	STIRRUPS TYPE	STIRRUPS SIZE	STIRRUPS SPACING	REMARKS
1B1	36	36	6-#9	6-#11	2	#4	@10	
1B1A	26	36	6-#9	6-#11	2	#4	@10	
1B2	26	48	4-#10	4-#10	2	#4	@10	#4@10 HORIZ. E.F. CONT.
1B3	36	52	7-#10	7-#11	2A	#6	@9	#6@7 HORIZ. E.F. CONT.; DEVELOP 5-#11 TOP INTO COL. 14
1B4	36	42	14-#11 (2 LAYERS)	7-#11	2	#5	@12	7-#11@SUPPORT @ WALL ,SEE PLAN
1B5	12	40	2-#11	2-#11	1	#4	@8	#4@10 HORIZ. E.F. CONT.
1B6	24	69	4-#8	4-#8	1	#4	@12	#4@10 HORIZ. E.F., CONT.
1B7	32	VARIES	10-#11(2LAYERS)	4-#9	2	#5	@8	SEE 3/S-977;#4@10 HORIZ. E.F.,CONT.
1B8	12	40	2-#9	2-#9	1	#4	@10	#4@10 HORIZ. E.F. CONT.
1B9	12	30	2-#11	2-#9	1	#4	@8	#4@10 HORIZ. E.F. CONT.
1B10	16 /12	40	2-#11	2-#9	1	#4	@8	1-#11B & 1-#9 T ADD'L IN 16" WIDE BM ; #4@10 HORIZ. E.F. CONT.
1B15	24	24	4-#10	4-#10	1	#4	@10	
1B16	16	36	3-#9	3-#8	1	#4	@12	#4@10 HORIZ. E.F. CONT.
1B17	18	32	3-#11	3-#9	1	#4	@8	
1B19	68	35	10-#11	10-#10	4A	#6, #4 SEE DET.	@8	#6@7 HORIZ E.F. CONT.
1B20	24	28	7-#11	7-#11	2	#6	@5	
1B21	36	42 /31	12-#11 (2LAYERS)	6-#11	2	#4	@7	+7-#11 (2ND LAYER) @ SUPPORT @ WALL, SEE PLAN
1B22	16	72	6-#11 (2LAYERS)	6-#11 (2 LAYERS)	1B	#6	@5 (HOOPS)	#6@8 HORIZ EA. FACE CONT.+ADD'L EMBEDED PLATE REINF.
1B23	16	60	6-#11 (2LAYERS)	6-#11 (2 LAYERS)	1B	#6	@5 (HOOPS)	#6@8 HORIZ EA. FACE CONT.+ADD'L EMBEDED PLATE REINF.
1B24	16	180 /99	6-#11 (2LAYERS)	6-#11 (2 LAYERS)	1B	#6	@5 (HOOPS)	#6@8 HORIZ EA. FACE CONT.+ADD'L EMBEDED PLATE REINF.
1B25	24	26	4-#11	4-#11	2	#4	@10	
1B26	6	10	1-#7	1-#7	1A	#4	@3 1/2	

TYPICAL BEAM SCHEDULE

BEAM MARK	SIZE WIDTH	SIZE DEPTH	REINFORCEMENT BOTTOM	REINFORCEMENT TOP	REINFORCEMENT TOP	STIRRUPS TYPE	STIRRUPS SIZE	STIRRUPS SPACING	REMARKS
TB1	12	24	3-#8	3-#7		1	#4	@8	
TB2	18	18	3-#8	2-#6		1	#4	@8	
TB3	8	18	2-#7	2-#5		1	#4	@8	
TB4	16/12	10	1-#6	1-#6		1A	#3	@4	
TB5	16	40	3-#8	3-#7		1	#4	@8	
TB6	16/12	48	3-#10	3-#6		1	#4	@12	
TB7	16	48	3-#10	3-#6		1	#4	@12	
TB8	14	14	3-#8	3-#8		1	#4	@5 (HOOPS)	1-#8 H.E.F. CONT

30" x 42" Arch E1 - SHEET SIZE

FILE NAME:
PLOT DATE:

DEPT OF BLDGS 121185528 Job Number
ES902950225 Scan Code

KEY PLAN:

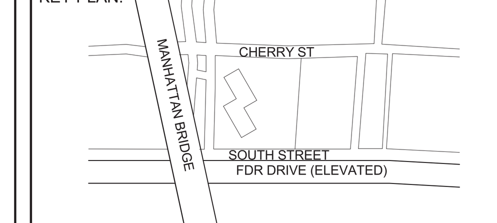

PROJECT NORTH
TRUE NORTH

DEVELOPER:
EXTELL DEVELOPMENT COMPANY
805 Third Ave, 7th Floor
New York, NY 10022
TEL: 212-712-6000 FAX: 212-712-6100

ARCHITECT OF RECORD:
AAI ARCHITECTS, P.C.
14 Wall Street, 2nd Floor
New York, NY 10005
TEL: 212-964-4040 FAX: 212-964-4090

INTERIOR DESIGNER:
MEYER DAVIS
180 Varick St, suite 404
New York, NY 10014
TEL: 212-627-5574

LANDSCAPE DESIGNER:
WEST 8 URBAN DESIGN & LANDSCAPE ARCHITECTURE P.C.
333 Hudson Street, Suite 905
New York, NY 10013
TEL: 212-285-0088 FAX: 212-285-0228

STRUCTURAL ENGINEERS:
WSP
228 East 45th Street
New York, NY 10017
TEL: 212-687-9888 FAX: 646-487-5501

MEP ENGINEERS:
ICOR ASSOCIATES, LLC
485 C Route 1 South, Suite 200
Iseline, NJ 08830
TEL: 908-272-3300 FAX: 908-272-4440

GEOTECHNICAL ENGINEERS:
LANGAN ENGINEERING & ENVIRONMENTAL SERVICES
21 Penn Plaza - 360 West 31st Street, 8th Floor
New York, NY 10001
TEL: 212.479.5400 FAX: 212.479.5444

No.	DESCRIPTION:	DATE:
1	50% SD	02-28-14
2	100%SD	04-25-14
3	ISSUED FOR DOT	04-28-14
4	FOUNDATION FILING	06-10-14
5	50% DD	08-01-14
6	DESIGN DEVELOPMENT	10-07-14
7	ISSUED FOR FILING	02-13-15
8	STEEL BID PACKAGE	02-24-15
9	CONCRETE BID PACKAGE	03-06-15
10	ADDENDUM #3	03-27-15
11	50% CONSTRUCTION DOCUMENTS	04-08-15
12	ADDENDUM #9	07-10-15
13	ADDENDUM #10	07-20-15
14	ISSUED FOR FILING	07-28-15
15	ASI #13	08-26-15
16	ADDENDUM #11	09-25-15
17	ADDENDUM #14	10-22-15
18	ADDENDUM #15	11-18-15
19	90% CONSTRUCTION DOCUMENTS	01-15-16
20	ADDENDUM #16	02-04-16
21	ASI #55	02-12-16
22	ASI #57	02-26-16
23	ASI #58	03-04-16
24	ISSUED FOR FILING	03-07-16

Discrepancies must be reported immediately to the Architect before proceeding. Only figured dimensions are to be used. Contractors must check all dimensions on site. This drawing is protected by copyright.

ALL DIMENSIONS ARE SHOWN IN IMPERIAL.

CONSULTANT: WSP

PROJECT:
252 SOUTH STREET
NEW YORK, NY

DRAWING TITLE:
1ST FLOOR OVERALL FRAMING PLAN

SEAL & SIGNATURE: STATE OF NEW YORK · AHMAD RAHIMIAN · No. 065537 · LICENSED PROFESSIONAL ENGINEER

DATE:	02/28/14
PROJECT No:	1302510
DRAWN: CAD	REV:
CHK: CL	
SCALE:	
DWG No:	**S-010.02**
DOB PAGE No: of	

DOB EMPLOYEE STAMP:
Damian Titus
Buildings
APPROVED
Under Directive 2 of 1975
AMENDED APPLICATION
Date: 04/11/2016
NYC Development Hub

DOB B-SCAN:

DEPT OF BLDGS 121185539 Job Number
E 598626 20050 Scan Code

30" x 42" Arch E1 - SHEET SIZE

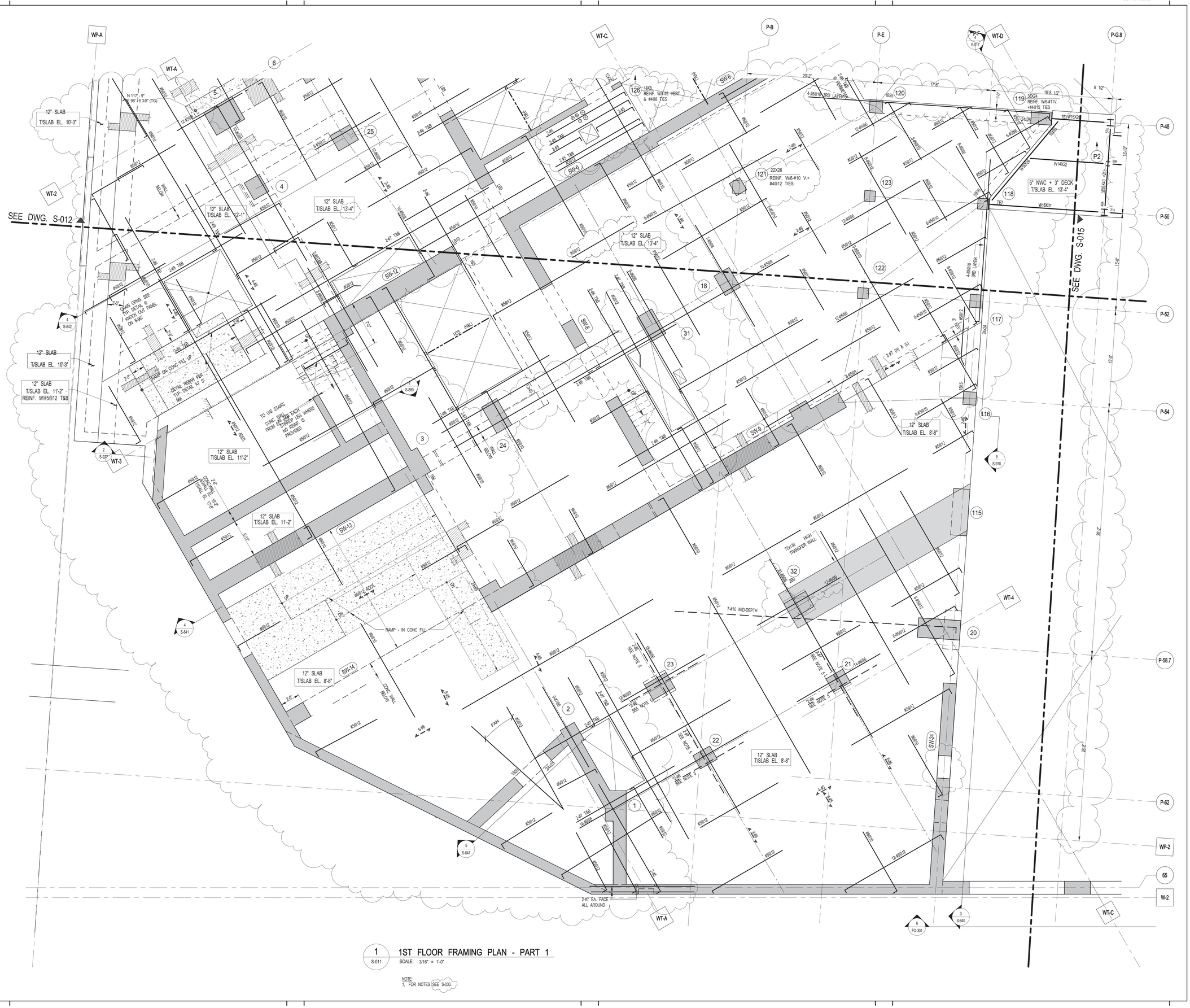

1 S-011 — 1ST FLOOR FRAMING PLAN - PART 1

SCALE: 3/16" = 1'-0"

NOTE:
1. FOR NOTES SEE S-030.

KEY PLAN:

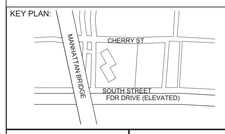

PROJECT NORTH

TRUE NORTH

DEVELOPER:
EXTELL DEVELOPMENT COMPANY
805 Third Ave, 7th Floor
New York, NY 10022
TEL: 212-712-6000 FAX: 212-712-6100

ARCHITECT OF RECORD:
AAI ARCHITECTS, P.C.
14 Wall Street, 2nd Floor
New York, NY 10005
TEL: 212-964-4040 FAX: 212-964-4090

INTERIOR DESIGNER:
MEYER DAVIS
180 Varick St, suite 404
New York, NY 10014
TEL: 212-627-5574

LANDSCAPE DESIGNER:
WEST 8 URBAN DESIGN & LANDSCAPE ARCHITECTURE P.C.
333 Hudson Street, Suite 905
New York, NY 10013
TEL: 212-285-0088 FAX: 212-285-0228

STRUCTURAL ENGINEERS:
WSP
228 East 45th Street
New York, NY 10017
TEL: 212-687-9888 FAX: 646-487-5501

MEP ENGINEERS:
ICOR ASSOCIATES, LLC
485 C Route 1 South, Suite 200
Iseline, NJ 08830
TEL: 908-272-3300 FAX: 908-272-4440

GEOTECHNICAL ENGINEERS:
LANGAN ENGINEERING & ENVIRONMENTAL SERVICES
21 Penn Plaza - 360 West 31st Street, 8th Floor
New York, NY 10001
TEL: 212.479.5400 FAX: 212.479.5444

No.	DESCRIPTION:	DATE:
1	DESIGN DEVELOPMENT	10-07-14
2	STEEL BID PACKAGE	02-24-15
3	CONCRETE BID PACKAGE	03-06-15
4	ADDENDUM #3	03-27-15
5	50% CONSTRUCTION DOCUMENTS	04-08-15
6	ADDENDUM #5	05-01-15
7	ADDENDUM #10	07-20-15
8	ISSUED FOR FILING	07-28-15
9	80% CONSTRUCTION DOCUMENTS	08-14-15
10	ADDENDUM #11	09-25-15
11	ADDENDUM #15	11-18-15
12	90% CONSTRUCTION DOCUMENTS	01-15-16
13	ASI #58	03-04-16
14	ISSUED FOR FILING	03-07-16

Discrepancies must be reported immediately to the Architect before proceeding. Only figured dimensions are to be used. Contractors must check all dimensions on site. This drawing is protected by copyright.

ALL DIMENSIONS ARE SHOWN IN IMPERIAL.

CONSULTANT:
WSP

PROJECT:
252 SOUTH STREET
NEW YORK, NY

DRAWING TITLE:
1ST FLOOR FRAMING PLAN - PART 1

SEAL & SIGNATURE:
STATE OF NEW YORK — AHMAD RAFIMOOH — No. 095052 — LICENSED PROFESSIONAL ENGINEER

DATE:	03/03/14
PROJECT No:	1302510
DRAWN: CAD	REV:
CHK: CL	
SCALE:	
DWG No:	**S-011.02**
DOB PAGE No:	of

DOB EMPLOYEE STAMP:
Damian Titus
NYC Buildings
APPROVED
Under Directive 2 of 1975
AMENDED APPLICATION
Date: 04/11/2016
NYC Development Hub

DOB B-SCAN:

FILE NAME:
PLOT DATE:

DEPT OF BLDGS 121185528 Job Number

ES503043992 Scan Code

30" x 42" Arch E1 - SHEET SIZE

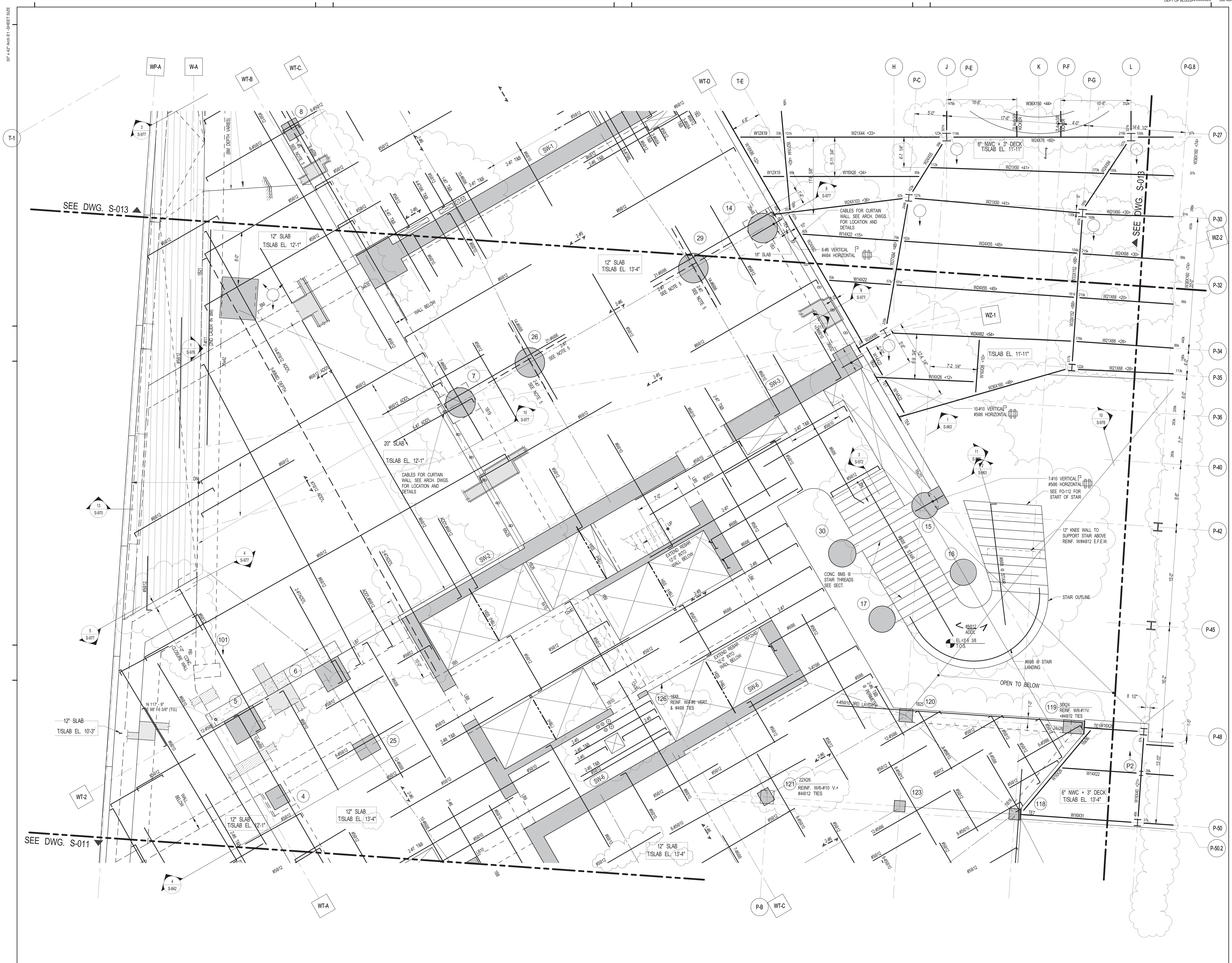

1 S-012 **1ST FLOOR FRAMING PLAN - PART 2**

SCALE: 3/16" = 1'-0"

NOTE:
1. FOR NOTES SEE S-030.

FILE NAME:
PLOT DATE:

KEY PLAN:

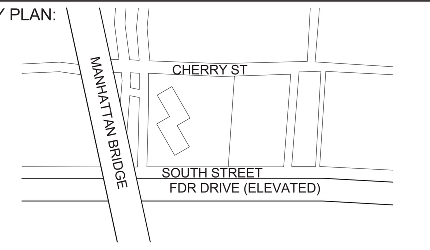

PROJECT NORTH

TRUE NORTH

DEVELOPER:
EXTELL DEVELOPMENT COMPANY
805 Third Ave, 7th Floor
New York, NY 10022
TEL: 212-712-6000 FAX: 212-712-6100

ARCHITECT OF RECORD:
AAI ARCHITECTS, P.C.
14 Wall Street, 2nd Floor
New York, NY 10005
TEL: 212-964-4040 FAX: 212-964-4090

INTERIOR DESIGNER:
MEYER DAVIS
180 Varick St, suite 404
New York, NY 10014
TEL: 212-627-5574

LANDSCAPE DESIGNER:
WEST 8 URBAN DESIGN & LANDSCAPE ARCHITECTURE P.C.
333 Hudson Street, Suite 905
New York, NY 10013
TEL: 212-285-0088 FAX: 212-285-0228

STRUCTURAL ENGINEERS:
WSP
228 East 45th Street
New York, NY 10017
TEL: 212-687-9888 FAX: 646-487-5501

MEP ENGINEERS:
ICOR ASSOCIATES, LLC
485 C Route 1 South, Suite 200
Iseline, NJ 08830
TEL: 908-272-3300 FAX: 908-272-4440

GEOTECHNICAL ENGINEERS:
LANGAN ENGINEERING & ENVIRONMENTAL SERVICES
21 Penn Plaza - 360 West 31st Street, 8th Floor
New York, NY 10001
TEL: 212.479.5400 FAX: 212.479.5444

No.	DESCRIPTION:	DATE:
1	DESIGN DEVELOPMENT	10-07-14
2	STEEL BID PACKAGE	02-24-15
3	CONCRETE BID PACKAGE	03-06-15
4	ADDENDUM #3	03-27-15
5	50% CONSTRUCTION DOCUMENTS	04-08-15
6	ADDENDUM #4	04-24-15
7	ISSUED FOR FILING	07-28-15
8	80% CONSTRUCTION DOCUMENTS	08-14-15
9	ADDENDUM #11	09-25-15
10	ADDENDUM #14	10-22-15
11	ADDENDUM #15	11-18-15
12	90% CONSTRUCTION DOCUMENTS	01-15-16
13	ADDENDUM #16	02-04-16
14	ISSUED FOR FILING	03-07-16

Discrepancies must be reported immediately to the Architect before proceeding. Only figured dimensions are to be used. Contractors must check all dimensions on site. This drawing is protected by copyright.

ALL DIMENSIONS ARE SHOWN IN IMPERIAL.

CONSULTANT:
WSP

PROJECT:
252 SOUTH STREET
NEW YORK, NY

DRAWING TITLE:
1ST FLOOR FRAMING PLAN - PART 2

SEAL & SIGNATURE:
STATE OF NEW YORK
AHMAD RAHIMIAN
No. 065537
LICENSED PROFESSIONAL ENGINEER

DATE:	03/03/14	
PROJECT No:	1302510	
DRAWN:	CAD	REV:
CHK:	CL	
SCALE:		
DWG No:	S-012. 02	
DOB PAGE No:	of	

DOB EMPLOYEE STAMP:
Damian Titus
Buildings
APPROVED
Under Directive 2 of 1975
AMENDED APPLICATION
Date: 04/11/2016
NYC Development Hub

DOB B-SCAN:

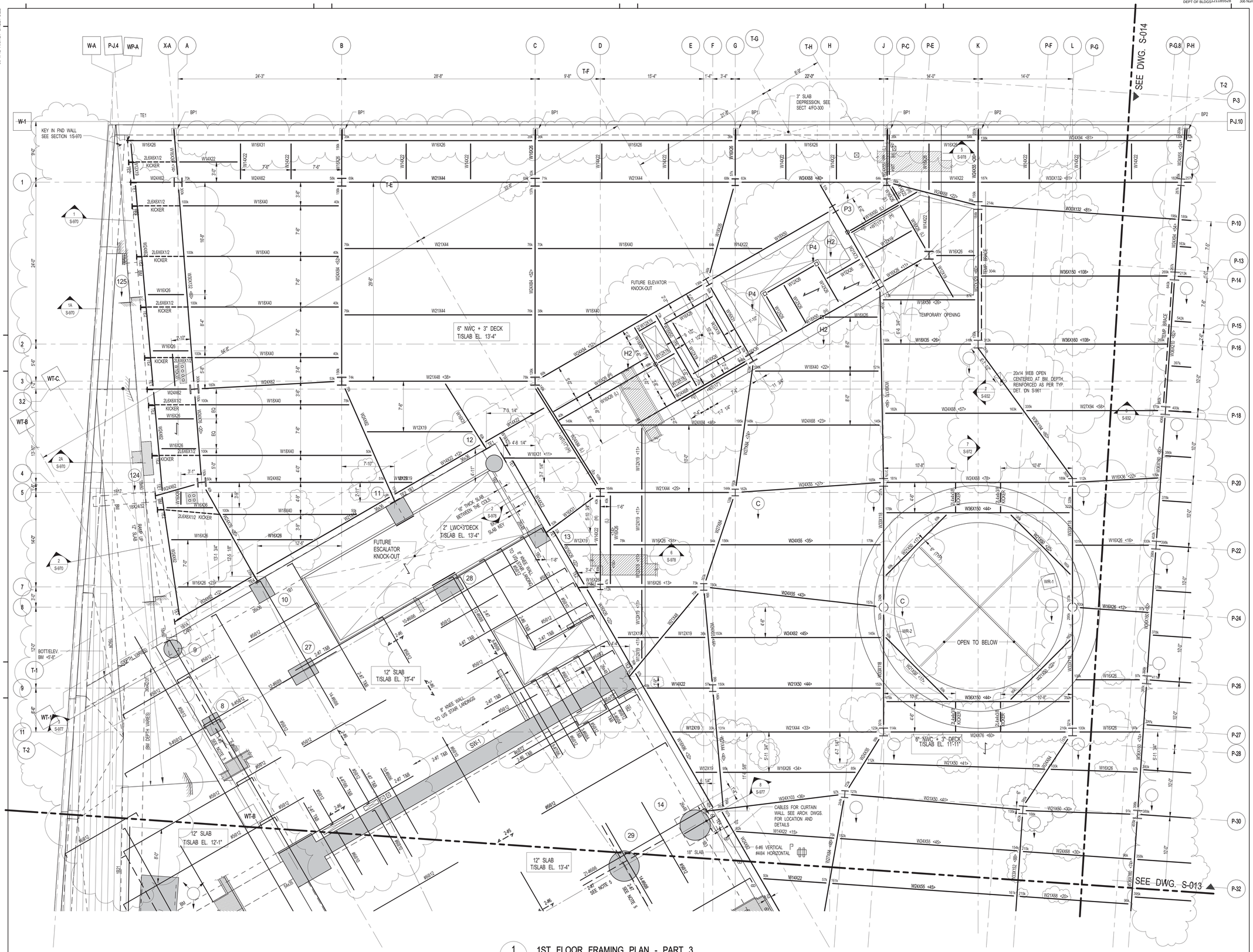

1 S-013 1ST FLOOR FRAMING PLAN - PART 3

SCALE: 3/16" = 1'-0"

NOTE:
1. FOR NOTES SEE S-030.

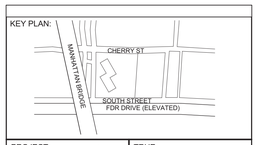

PROJECT NORTH

TRUE NORTH

DEVELOPER:
EXTELL DEVELOPMENT COMPANY
805 Third Ave, 7th Floor
New York, NY 10022
TEL: 212-712-6000 FAX: 212-712-6100

ARCHITECT OF RECORD:
AAI ARCHITECTS, P.C.
14 Wall Street, 2nd Floor
New York, NY 10005
TEL: 212-964-4040 FAX: 212-964-4090

INTERIOR DESIGNER:
MEYER DAVIS
180 Varick St, suite 404
New York, NY 10014
TEL: 212-627-5574

LANDSCAPE DESIGNER:
WEST 8 URBAN DESIGN & LANDSCAPE ARCHITECTURE P.C.
333 Hudson Street, Suite 905
New York, NY 10013
TEL: 212-285-0088 FAX: 212-285-0228

STRUCTURAL ENGINEERS:
WSP
228 East 45th Street
New York, NY 10017
TEL: 212-687-9888 FAX: 646-487-5501

MEP ENGINEERS:
ICOR ASSOCIATES, LLC
485 C Route 1 South, Suite 200
Iseline, NJ 08830
TEL: 908-272-3300 FAX: 908-272-4440

GEOTECHNICAL ENGINEERS:
LANGAN ENGINEERING & ENVIRONMENTAL SERVICES
21 Penn Plaza - 360 West 31st Street, 8th Floor
New York, NY 10001
TEL: 212.479.5400 FAX: 212.479.5444

No.	DESCRIPTION:	DATE:
1	DESIGN DEVELOPMENT	10-07-14
2	STEEL BID PACKAGE	02-24-15
3	Revision 22	Date 22
4	CONCRETE BID PACKAGE	03-06-15
5	ADDENDUM #3	03-27-15
6	50% CONSTRUCTION DOCUMENTS	04-08-15
7	ADDENDUM #4	04-24-15
8	ADDENDUM #5	05-01-15
9	ADDENDUM #9	07-10-15
10	ADDENDUM #10	07-20-15
11	ISSUED FOR FILING	07-28-15
12	80% CONSTRUCTION DOCUMENTS	08-14-15
13	ADDENDUM #11	09-25-15
14	ADDENDUM #14	10-22-15
15	ADDENDUM #15	11-18-15
16	90% CONSTRUCTION DOCUMENTS	01-15-16
17	ASI #55	02-12-16
18	ASI #56	02-19-16
19	ISSUED FOR FILING	03-07-16

Discrepancies must be reported immediately to the Architect before proceeding. Only figured dimensions are to be used. Contractors must check all dimensions on site. This drawing is protected by copyright.

ALL DIMENSIONS ARE SHOWN IN IMPERIAL.

CONSULTANT:
WSP

PROJECT:
252 SOUTH STREET
NEW YORK, NY

DRAWING TITLE:
1ST FLOOR FRAMING PLAN - PART 3

SEAL & SIGNATURE:
STATE OF NEW YORK
AHMAD RAHIMIAN
No. 065537
LICENSED PROFESSIONAL ENGINEER

DATE:	03/03/14
PROJECT No:	1302510
DRAWN: CAD	REV:
CHK: CL	
SCALE:	
DWG No:	S-013.02
DOB PAGE No:	of

DOB EMPLOYEE STAMP:
Damian Titus
Buildings
APPROVED
Under Directive 2 of 1975
AMENDED APPLICATION
Date: 04/11/2016
NYC Development Hub

DOB B-SCAN:

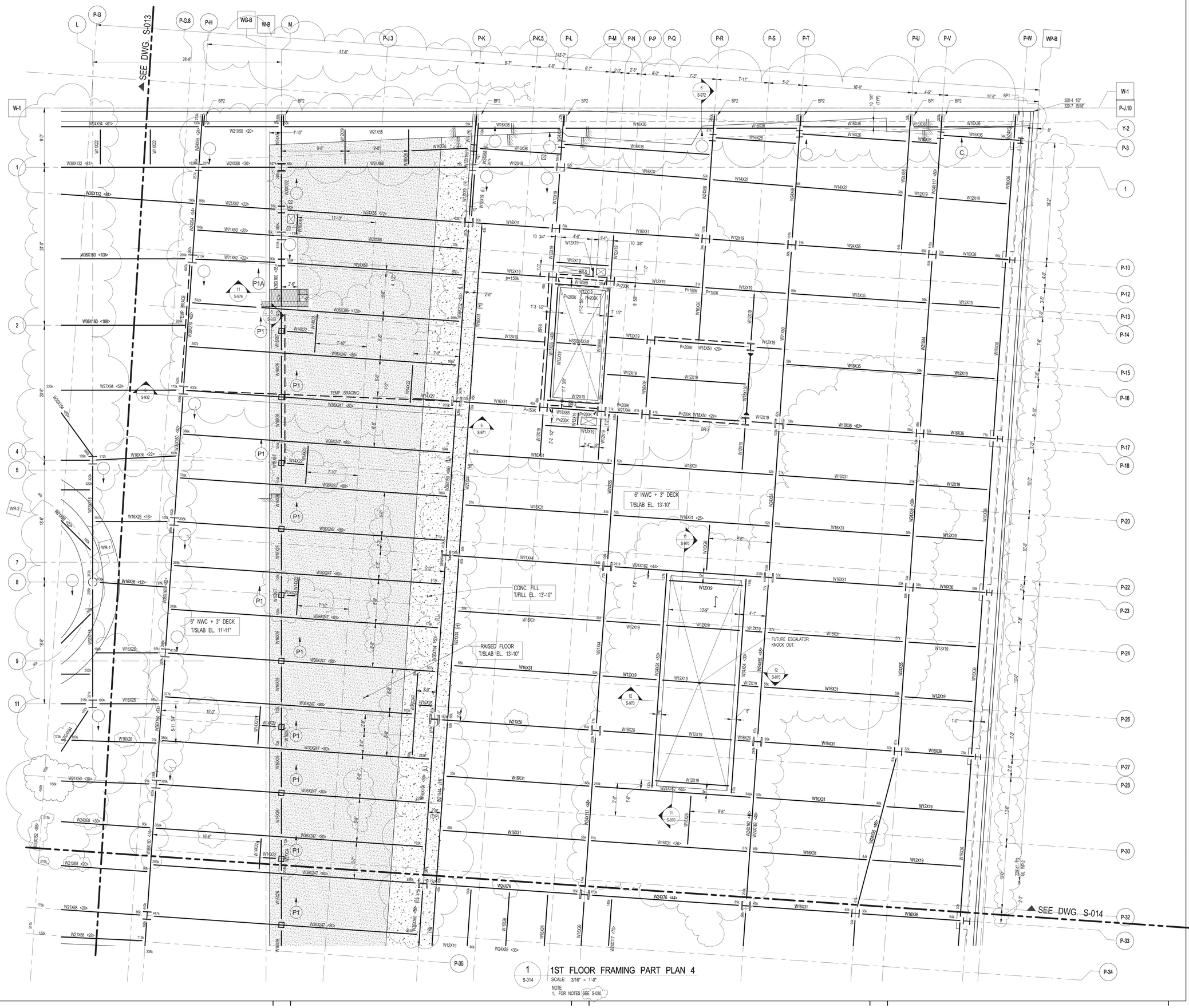

1 S-014 1ST FLOOR FRAMING PART PLAN 4

SCALE: 3/16" = 1'-0"

NOTE:
1. FOR NOTES SEE S-030.

KEY PLAN:

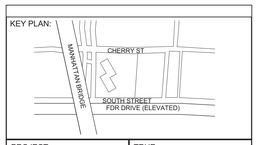

PROJECT NORTH | TRUE NORTH

DEVELOPER:
EXTELL DEVELOPMENT COMPANY
805 Third Ave, 7th Floor
New York, NY 10022
TEL: 212-712-6000 FAX: 212-712-6100

ARCHITECT OF RECORD:
AAI ARCHITECTS, P.C.
14 Wall Street, 2nd Floor
New York, NY 10005
TEL: 212-964-4040 FAX: 212-964-4090

INTERIOR DESIGNER:
MEYER DAVIS
180 Varick St, suite 404
New York, NY 10014
TEL: 212-627-5574

LANDSCAPE DESIGNER:
WEST 8 URBAN DESIGN & LANDSCAPE ARCHITECTURE P.C.
333 Hudson Street, Suite 905
New York, NY 10013
TEL: 212-285-0088 FAX: 212-285-0228

STRUCTURAL ENGINEERS:
WSP
228 East 45th Street
New York, NY 10017
TEL: 212-687-9888 FAX: 646-487-5501

MEP ENGINEERS:
ICOR ASSOCIATES, LLC
485 C Route 1 South, Suite 200
Iseline, NJ 08830
TEL: 908-272-3300 FAX: 908-272-4440

GEOTECHNICAL ENGINEERS:
LANGAN ENGINEERING & ENVIRONMENTAL SERVICES
21 Penn Plaza - 360 West 31st Street, 8th Floor
New York, NY 10001
TEL: 212.479.5400 FAX: 212.479.5444

No.	DESCRIPTION:	DATE:
1	DESIGN DEVELOPMENT	10-07-14
2	STEEL BID PACKAGE	02-24-15
3	ADDENDUM #3	03-27-15
4	50% CONSTRUCTION DOCUMENTS	04-08-15
5	ADDENDUM #4	04-24-15
6	ADDENDUM #5	05-01-15
7	ADDENDUM #9	07-10-15
8	ADDENDUM #10	07-20-15
9	ISSUED FOR FILING	07-28-15
10	80% CONSTRUCTION DOCUMENTS	08-14-15
11	ADDENDUM #11	09-25-15
12	ADDENDUM #14	10-22-15
13	ADDENDUM #15	11-18-15
14	90% CONSTRUCTION DOCUMENTS	01-15-16
15	ADDENDUM #16	02-04-16
16	ASI #55	02-12-16
17	ASI #56	02-19-16
18	ASI #58	03-04-16
19	ISSUED FOR FILING	03-07-16

Discrepancies must be reported immediately to the Architect before proceeding. Only figured dimensions are to be used. Contractors must check all dimensions on site. This drawing is protected by copyright.

ALL DIMENSIONS ARE SHOWN IN IMPERIAL.

CONSULTANT:
WSP

PROJECT:
252 SOUTH STREET
NEW YORK, NY

DRAWING TITLE:
1ST FLOOR FRAMING PLAN - PART 4

SEAL & SIGNATURE:
STATE OF NEW YORK
AHMAD RAHIMIAN
No. 065537
LICENSED PROFESSIONAL ENGINEER

DATE:	03/03/14
PROJECT No:	1302510
DRAWN: CAD	REV:
CHK: CL	
SCALE:	
DWG No:	S-014.02
DOB PAGE No:	of

DOB EMPLOYEE STAMP:
Damian Titus
Buildings
APPROVED
Under Directive 2 of 1975
AMENDED APPLICATION
Date: 04/11/2016
NYC Development Hub

DOB B-SCAN:

DEPT OF BLDGS 121105639 Job Number
E38699983923 Scan Code

30" x 42" Arch E1 - SHEET SIZE

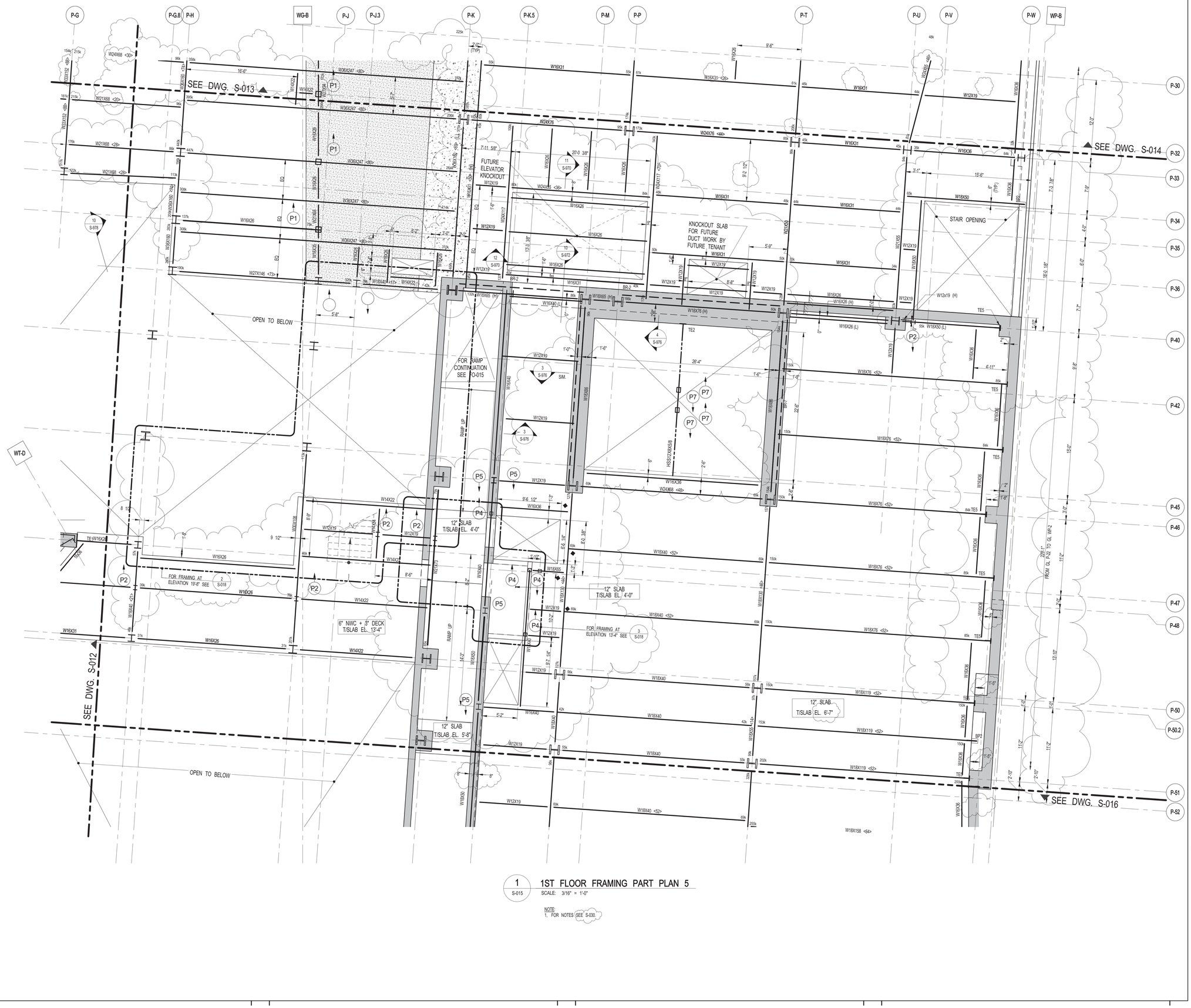

1 S-015 — 1ST FLOOR FRAMING PART PLAN 5

SCALE: 3/16" = 1'-0"

NOTE:
1. FOR NOTES SEE S-030.

FILE NAME:
PLOT DATE:

KEY PLAN:

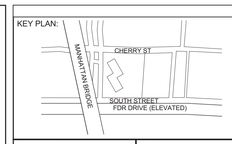

PROJECT NORTH

TRUE NORTH

DEVELOPER:
EXTELL DEVELOPMENT COMPANY
805 Third Ave, 7th Floor
New York, NY 10022
TEL: 212-712-6000 FAX: 212-712-6100

ARCHITECT OF RECORD:
AAI ARCHITECTS, P.C.
14 Wall Street, 2nd Floor
New York, NY 10005
TEL: 212-964-4040 FAX: 212-964-4090

INTERIOR DESIGNER:
MEYER DAVIS
180 Varick St, suite 404
New York, NY 10014
TEL: 212-627-5574

LANDSCAPE DESIGNER:
WEST 8 URBAN DESIGN & LANDSCAPE ARCHITECTURE P.C.
333 Hudson Street, Suite 905
New York, NY 10013
TEL: 212-285-0088 FAX: 212-285-0228

STRUCTURAL ENGINEERS:
WSP
228 East 45th Street
New York, NY 10017
TEL: 212-687-9888 FAX: 646-487-5501

MEP ENGINEERS:
ICOR ASSOCIATES, LLC
485 C Route 1 South, Suite 200
Iseline, NJ 08830
TEL: 908-272-3300 FAX: 908-272-4440

GEOTECHNICAL ENGINEERS:
LANGAN ENGINEERING & ENVIRONMENTAL SERVICES
21 Penn Plaza - 360 West 31st Street, 8th Floor
New York, NY 10001
TEL: 212.479.5400 FAX: 212.479.5444

No.	DESCRIPTION:	DATE:
1	DESIGN DEVELOPMENT	10-07-14
2	STEEL BID PACKAGE	02-24-15
3	ADDENDUM #3	03-27-15
4	50% CONSTRUCTION DOCUMENTS	04-08-15
5	ADDENDUM #4	04-24-15
6	ADDENDUM #5	05-01-15
7	ADDENDUM #9	07-10-15
8	ISSUED FOR FILING	07-28-15
9	80% CONSTRUCTION DOCUMENTS	08-14-15
10	ADDENDUM #11	09-25-15
11	90% CONSTRUCTION DOCUMENTS	01-15-16
12	ADDENDUM #16	02-04-16
13	ASI #55	02-12-16
14	ASI #56	02-19-16
15	ASI #58	03-04-16
16	ISSUED FOR FILING	03-07-16

Discrepancies must be reported immediately to the Architect before proceeding. Only figured dimensions are to be used. Contractors must check all dimensions on site. This drawing is protected by copyright.

ALL DIMENSIONS ARE SHOWN IN IMPERIAL.

CONSULTANT:
WSP

PROJECT:
252 SOUTH STREET
NEW YORK, NY

DRAWING TITLE:
1ST FLOOR FRAMING PLAN - PART 5

SEAL & SIGNATURE:
STATE OF NEW YORK — AHMAD RAZDAN — No. 085057 — LICENSED PROFESSIONAL ENGINEER

DATE:	03/03/14
PROJECT No:	1302510
DRAWN: CAD	REV:
CHK: CL	
SCALE:	
DWG No:	**S-015.02**
DOB PAGE No:	of

DOB EMPLOYEE STAMP:
Damian Titus
Buildings
APPROVED
Under Directive 2 of 1975
AMENDED APPLICATION
Date: 04/11/2016
NYC Development Hub

DOB B-SCAN:

DEPT OF BLDGS121805628 Job Number
E300157669 Scan Code

30" x 42" Arch E1 - SHEET SIZE

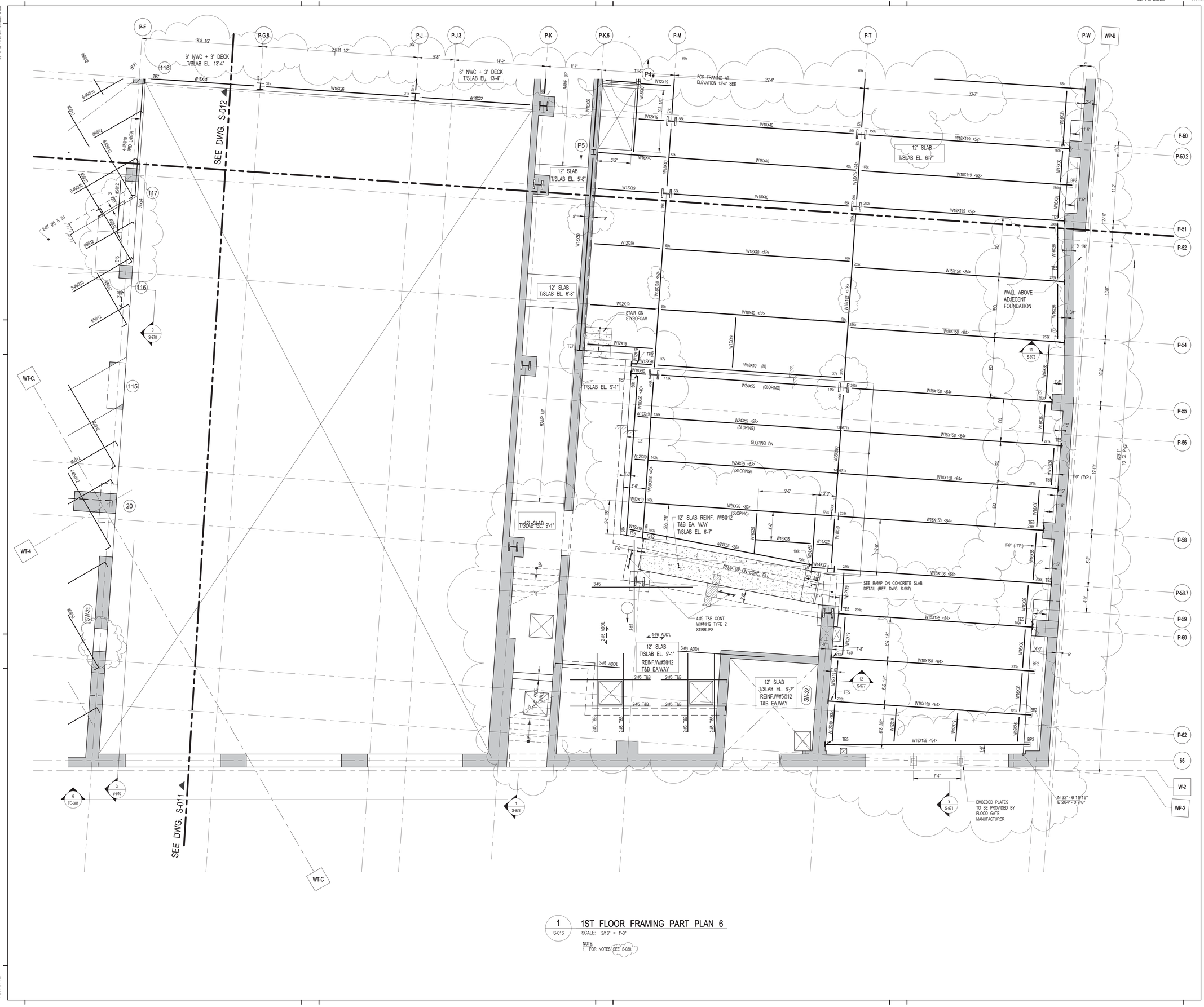

1 S-016 — 1ST FLOOR FRAMING PART PLAN 6

SCALE: 3/16" = 1'-0"

NOTE:
1. FOR NOTES SEE S-030.

FILE NAME:
PLOT DATE:

KEY PLAN:

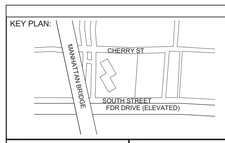

PROJECT NORTH

TRUE NORTH

DEVELOPER:
EXTELL DEVELOPMENT COMPANY
805 Third Ave, 7th Floor
New York, NY 10022
TEL: 212-712-6000 FAX: 212-712-6100

ARCHITECT OF RECORD:
AAI ARCHITECTS, P.C.
14 Wall Street, 2nd Floor
New York, NY 10005
TEL: 212-964-4040 FAX: 212-964-4090

INTERIOR DESIGNER:
MEYER DAVIS
180 Varick St, suite 404
New York, NY 10014
TEL: 212-627-5574

LANDSCAPE DESIGNER:
WEST 8 URBAN DESIGN & LANDSCAPE ARCHITECTURE P.C.
333 Hudson Street, Suite 905
New York, NY 10013
TEL: 212-285-0088 FAX: 212-285-0228

STRUCTURAL ENGINEERS:
WSP
228 East 45th Street
New York, NY 10017
TEL: 212-687-9888 FAX: 646-487-5501

MEP ENGINEERS:
ICOR ASSOCIATES, LLC
485 C Route 1 South, Suite 200
Iseline, NJ 08830
TEL: 908-272-3300 FAX: 908-272-4440

GEOTECHNICAL ENGINEERS:
LANGAN ENGINEERING & ENVIRONMENTAL SERVICES
21 Penn Plaza - 360 West 31st Street, 8th Floor
New York, NY 10001
TEL: 212.479.5400 FAX: 212.479.5444

No.	DESCRIPTION:	DATE:
1	DESIGN DEVELOPMENT	10-07-14
2	STEEL BID PACKAGE	02-24-15
3	ADDENDUM #3	03-27-15
4	50% CONSTRUCTION DOCUMENTS	04-08-15
5	ADDENDUM #4	04-24-15
6	ADDENDUM #5	05-01-15
7	ADDENDUM #9	07-10-15
8	ISSUED FOR FILING	07-28-15
9	80% CONSTRUCTION DOCUMENTS	08-14-15
10	ADDENDUM #11	09-25-15
11	90% CONSTRUCTION DOCUMENTS	01-15-16
12	ADDENDUM #16	02-04-16
13	ASI #55	02-12-16
14	ASI #56	02-19-16
15	ASI #58	03-04-16
16	ISSUED FOR FILING	03-07-16

Discrepancies must be reported immediately to the Architect before proceeding. Only figured dimensions are to be used. Contractors must check all dimensions on site. This drawing is protected by copyright.

ALL DIMENSIONS ARE SHOWN IN IMPERIAL.

CONSULTANT:
WSP

PROJECT:
252 SOUTH STREET
NEW YORK, NY

DRAWING TITLE:
1ST FLOOR FRAMING PLAN - PART 6

SEAL & SIGNATURE:
STATE OF NEW YORK · ARMAND RAMBOSKY · No. 085552 · LICENSED PROFESSIONAL ENGINEER

DATE:	03/03/14
PROJECT No:	1302510
DRAWN: CAD	REV:
CHK: CL	
SCALE:	
DWG No:	**S-016.02**
DOB PAGE No:	of

DOB EMPLOYEE STAMP:
Damian Titus
Buildings
APPROVED
Under Directive 2 of 1975
AMENDED APPLICATION
Date: 04/11/2016
NYC Development Hub

DOB B-SCAN:

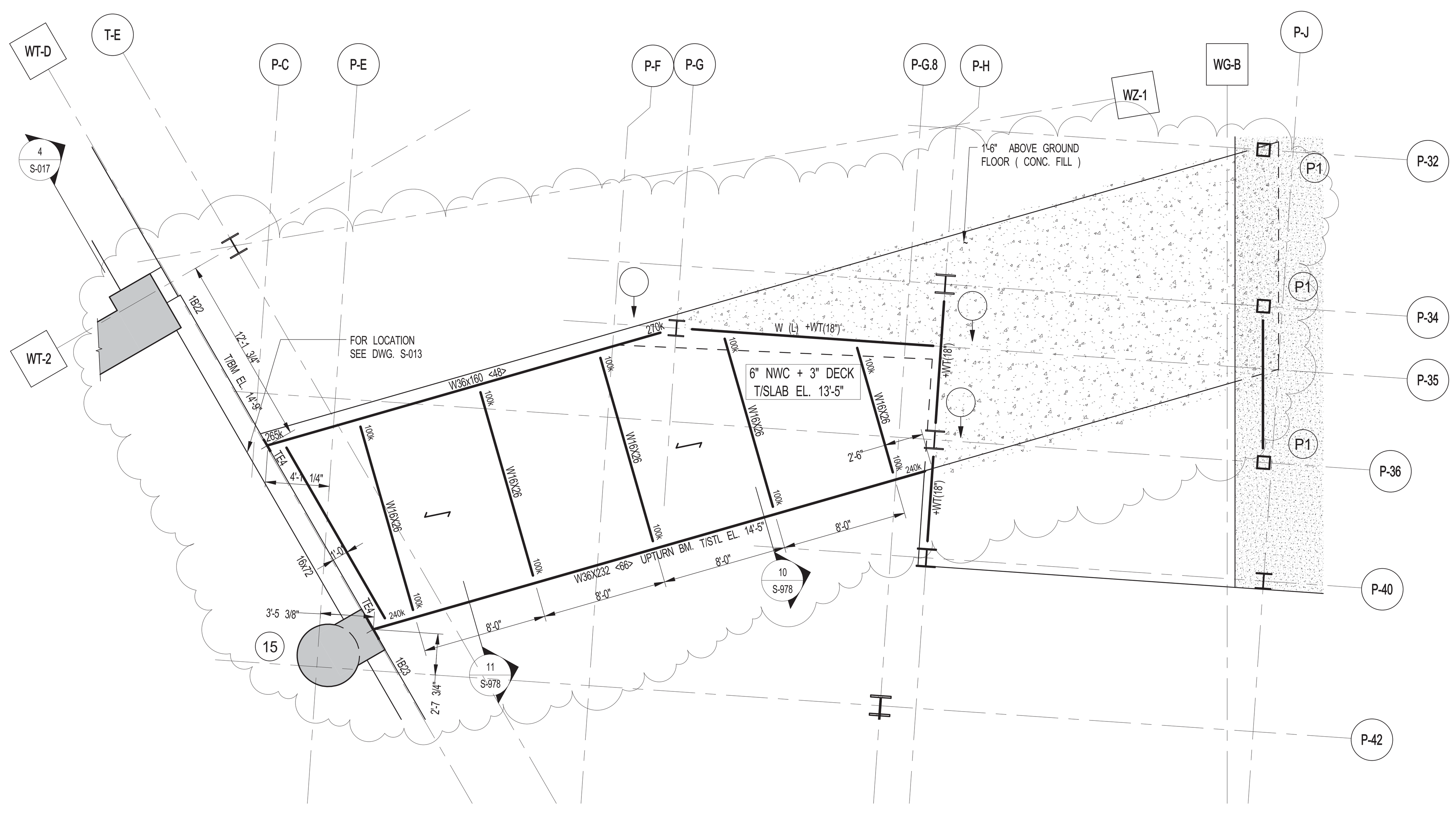

1 PART FRAMING PLAN AT EL. 13'-5"
S-017 SCALE: 3/16" = 1'-0"

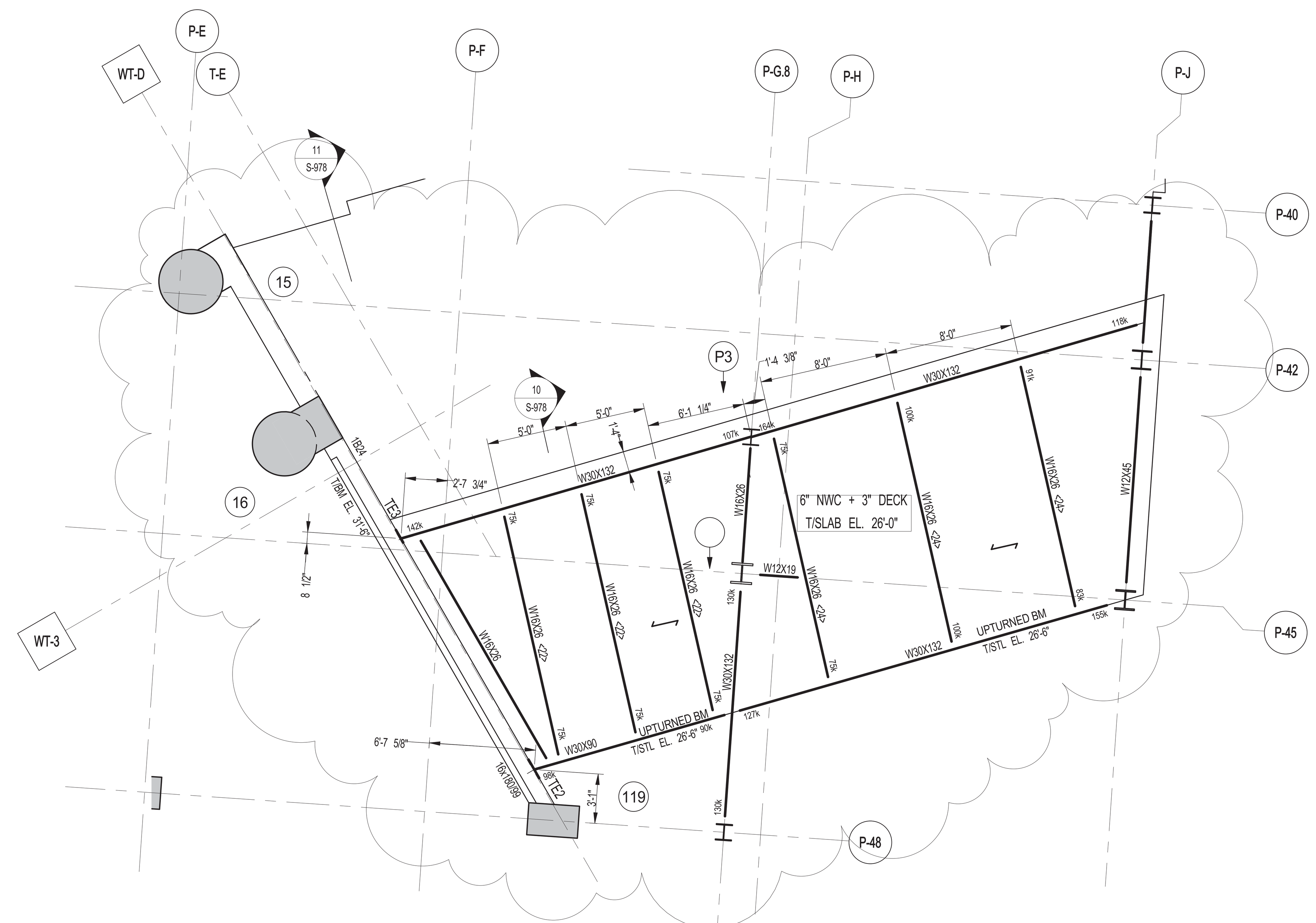

3 PART FRAMING PLAN AT EL.= 26'-0"
S-017 SCALE: 3/16" = 1'-0"

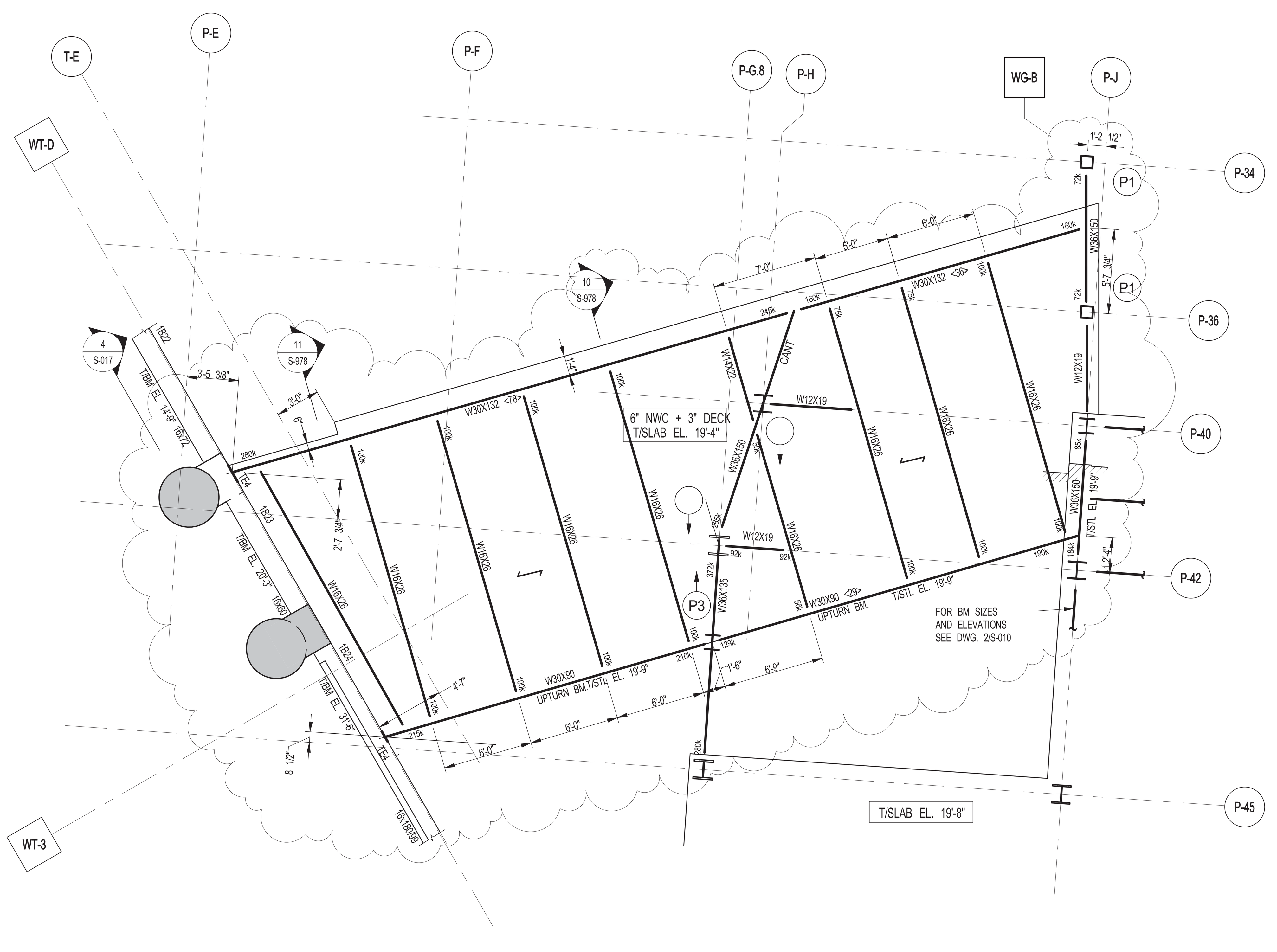

2 PART FRAMING PLAN AT EL. 19'-4"
S-017 SCALE: 3/16" = 1'-0"

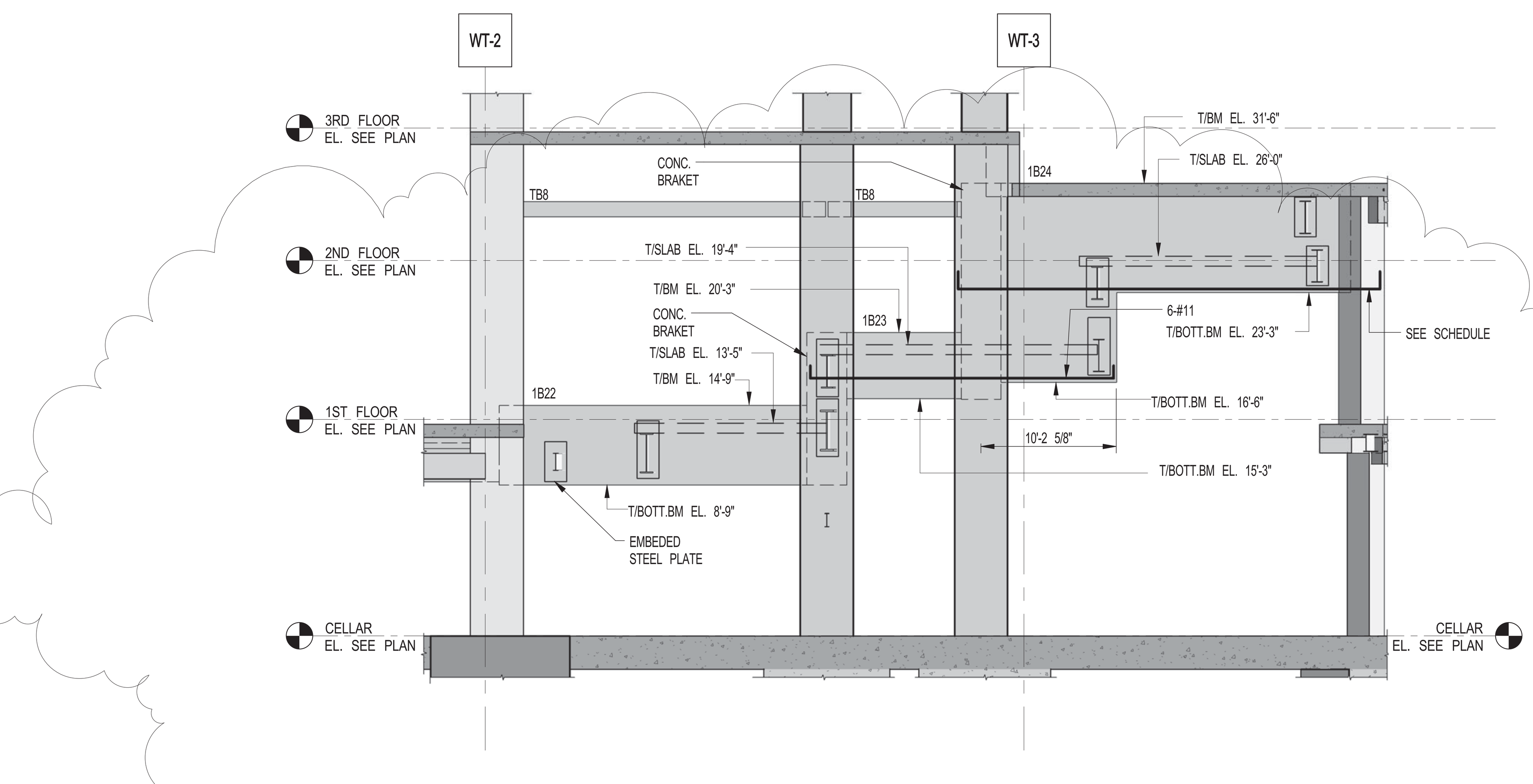

4 ELEVATION
S-017 SCALE: 1/8" = 1'-0"

NOTE:
1. FOR NOTES SEE S-030.

KEY PLAN:

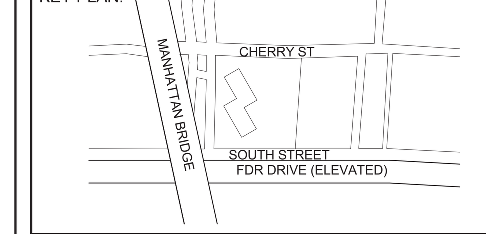

PROJECT NORTH | TRUE NORTH

DEVELOPER:
EXTELL DEVELOPMENT COMPANY
805 Third Ave, 7th Floor
New York, NY 10022
TEL: 212-712-6000 FAX: 212-712-6100

ARCHITECT OF RECORD:
AAI ARCHITECTS, P.C.
14 Wall Street, 2nd Floor
New York, NY 10005
TEL: 212-964-4040 FAX: 212-964-4090

INTERIOR DESIGNER:
MEYER DAVIS
180 Varick St, suite 404
New York, NY 10014
TEL: 212-627-5574

LANDSCAPE DESIGNER:
WEST 8 URBAN DESIGN & LANDSCAPE ARCHITECTURE P.C.
333 Hudson Street, Suite 905
New York, NY 10013
TEL: 212-285-0088 FAX: 212-285-0228

STRUCTURAL ENGINEERS:
WSP
228 East 45th Street
New York, NY 10017
TEL: 212-687-9888 FAX: 646-487-5501

MEP ENGINEERS:
ICOR ASSOCIATES, LLC
485 C Route 1 South, Suite 200
Iseline, NJ 08830
TEL: 908-272-3300 FAX: 908-272-4440

GEOTECHNICAL ENGINEERS:
LANGAN ENGINEERING & ENVIRONMENTAL SERVICES
21 Penn Plaza - 360 West 31st Street, 8th Floor
New York, NY 10001
TEL: 212.479.5400 FAX: 212.479.5444

No.	DESCRIPTION:	DATE:
1	STEEL BID PACKAGE	02-24-15
2	ADDENDUM #3	03-27-15
3	50% CONSTRUCTION DOCUMENTS	04-08-15
4	ADDENDUM #4	04-24-15
5	ISSUED FOR FILING	07-28-15
6	80% CONSTRUCTION DOCUMENTS	08-14-15
7	ADDENDUM #14	10-22-15
8	ADDENDUM #15	11-18-15
9	90% CONSTRUCTION DOCUMENTS	01-15-16
10	ADDENDUM #16	02-04-16
11	ASI #55	02-12-16
12	ASI #58	03-04-16
13	ISSUED FOR FILING	03-07-16

Discrepancies must be reported immediately to the Architect before proceeding. Only figured dimensions are to be used. Contractors must check all dimensions on site. This drawing is protected by copyright.

ALL DIMENSIONS ARE SHOWN IN IMPERIAL.

CONSULTANT:
WSP

PROJECT:
252 SOUTH STREET
NEW YORK, NY

DRAWING TITLE:
SUMAC MEANDER PART FRAMING PLANS AND ELEVATIONS.

SEAL & SIGNATURE:

DATE:	02/24/15
PROJECT No:	1302510
DRAWN:	CAD REV:
CHK:	CL
SCALE:	As indicated
DWG No:	S-017.02
DOB PAGE No:	of

DOB EMPLOYEE STAMP: DOB B-SCAN:

Damian Titus
Buildings
APPROVED
Under Directive 2 of 1975
AMENDED APPLICATION
Date: 04/11/2016
NYC Development Hub

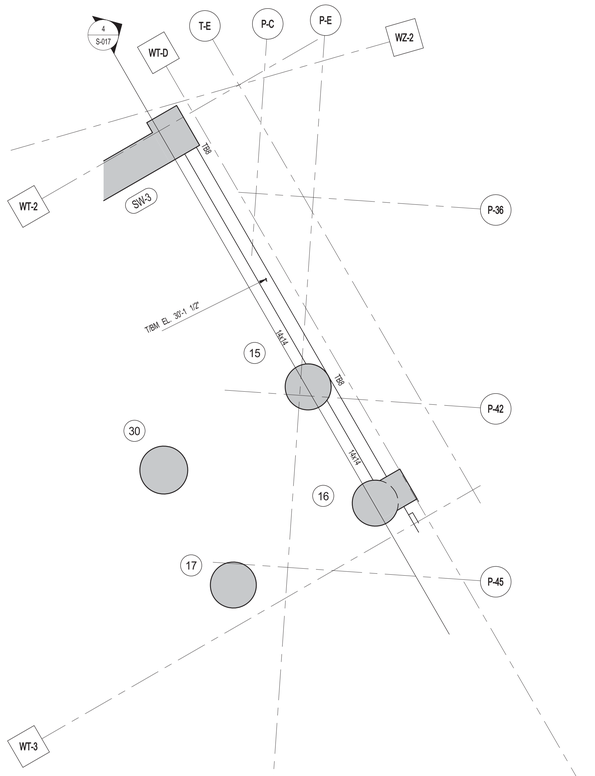

1 S-018 1ST FLOOR INTERMEDIATE FRAMING PART PLAN
SCALE: 3/16" = 1'-0"

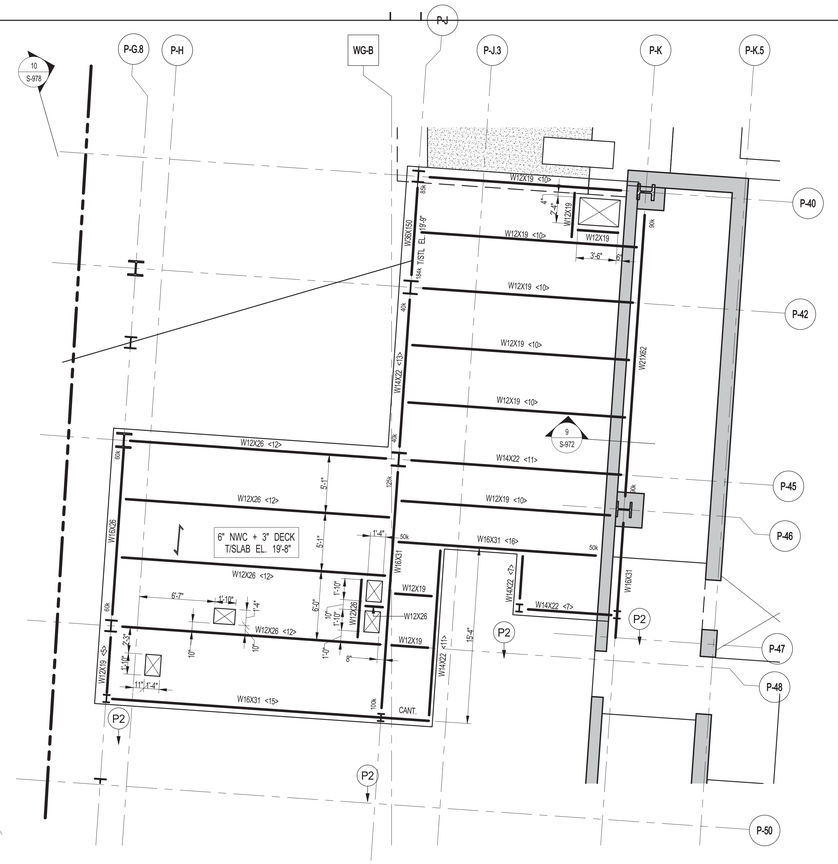

2 S-018 PART FRAMING PLAN @ EL. 19'-8"
SCALE: 3/16" = 1'-0"

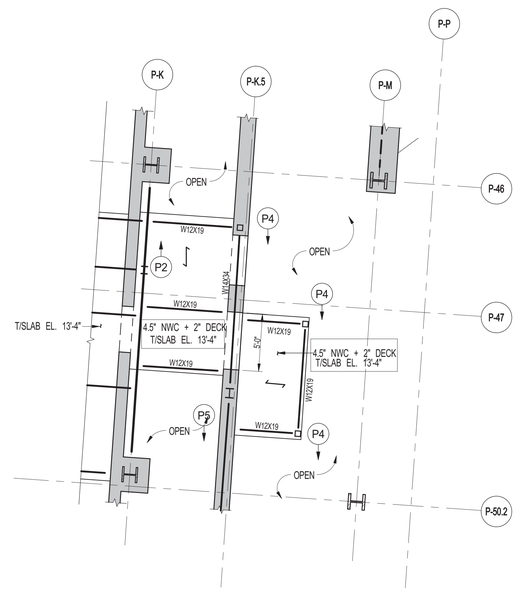

3 S-018 PART FRAMING PLAN AT RAMP EL. 13'-4"
SCALE: 3/16" = 1'-0"

KEY PLAN:

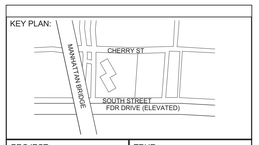

PROJECT NORTH

TRUE NORTH

DEVELOPER:
EXTELL DEVELOPMENT COMPANY
805 Third Ave, 7th Floor
New York, NY 10022
TEL: 212-712-6000 FAX: 212-712-6100

ARCHITECT OF RECORD:
AAI ARCHITECTS, P.C.
14 Wall Street, 2nd Floor
New York, NY 10005
TEL: 212-964-4040 FAX: 212-964-4090

INTERIOR DESIGNER:
MEYER DAVIS
180 Varick St, suite 404
New York, NY 10014
TEL: 212-627-5574

LANDSCAPE DESIGNER:
WEST 8 URBAN DESIGN & LANDSCAPE ARCHITECTURE P.C.
333 Hudson Street, Suite 905
New York, NY 10013
TEL: 212-285-0088 FAX: 212-285-0228

STRUCTURAL ENGINEERS:
WSP
228 East 45th Street
New York, NY 10017
TEL: 212-687-9888 FAX: 646-487-5501

MEP ENGINEERS:
ICOR ASSOCIATES, LLC
485 C Route 1 South, Suite 200
Iseline, NJ 08830
TEL: 908-272-3300 FAX: 908-272-4440

GEOTECHNICAL ENGINEERS:
LANGAN ENGINEERING & ENVIRONMENTAL SERVICES
21 Penn Plaza - 360 West 31st Street, 8th Floor
New York, NY 10001
TEL: 212.479.5400 FAX: 212.479.5444

No.	DESCRIPTION:	DATE:
1	50% CONSTRUCTION DOCUMENTS	04-08-15
2	ADDENDUM #4	04-24-15
3	80% CONSTRUCTION DOCUMENTS	08-14-15
4	ASI #55	02-12-16
5	ASI #56	02-19-16
6	ASI #58	03-04-16
7	ISSUED FOR FILING	03-07-16

Discrepancies must be reported immediately to the Architect before proceeding. Only figured dimensions are to be used. Contractors must check all dimensions on site. This drawing is protected by copyright.

ALL DIMENSIONS ARE SHOWN IN IMPERIAL.

CONSULTANT:
WSP

PROJECT:
252 SOUTH STREET
NEW YORK, NY

DRAWING TITLE:
PART FRAMING PLANS

SEAL & SIGNATURE:
STATE OF NEW YORK
AHMAD RAHIMIAN
No. 065537
LICENSED PROFESSIONAL ENGINEER

DATE:	12/15/15
PROJECT No:	1302510
DRAWN: CAD	REV:
CHK: CL	
SCALE: 3/16" = 1'-0"	
DWG No:	S-018.00
DOB PAGE No:	of

DOB EMPLOYEE STAMP:
Damian Titus
Buildings
APPROVED
Under Directive 2 of 1975
AMENDED APPLICATION
Date: 04/11/2016
NYC Development Hub

DOB B-SCAN:

DEPT OF BLDGS121185539 Job Number
E3142158109 Scan Code
30" x 42" Arch E1 - SHEET SIZE

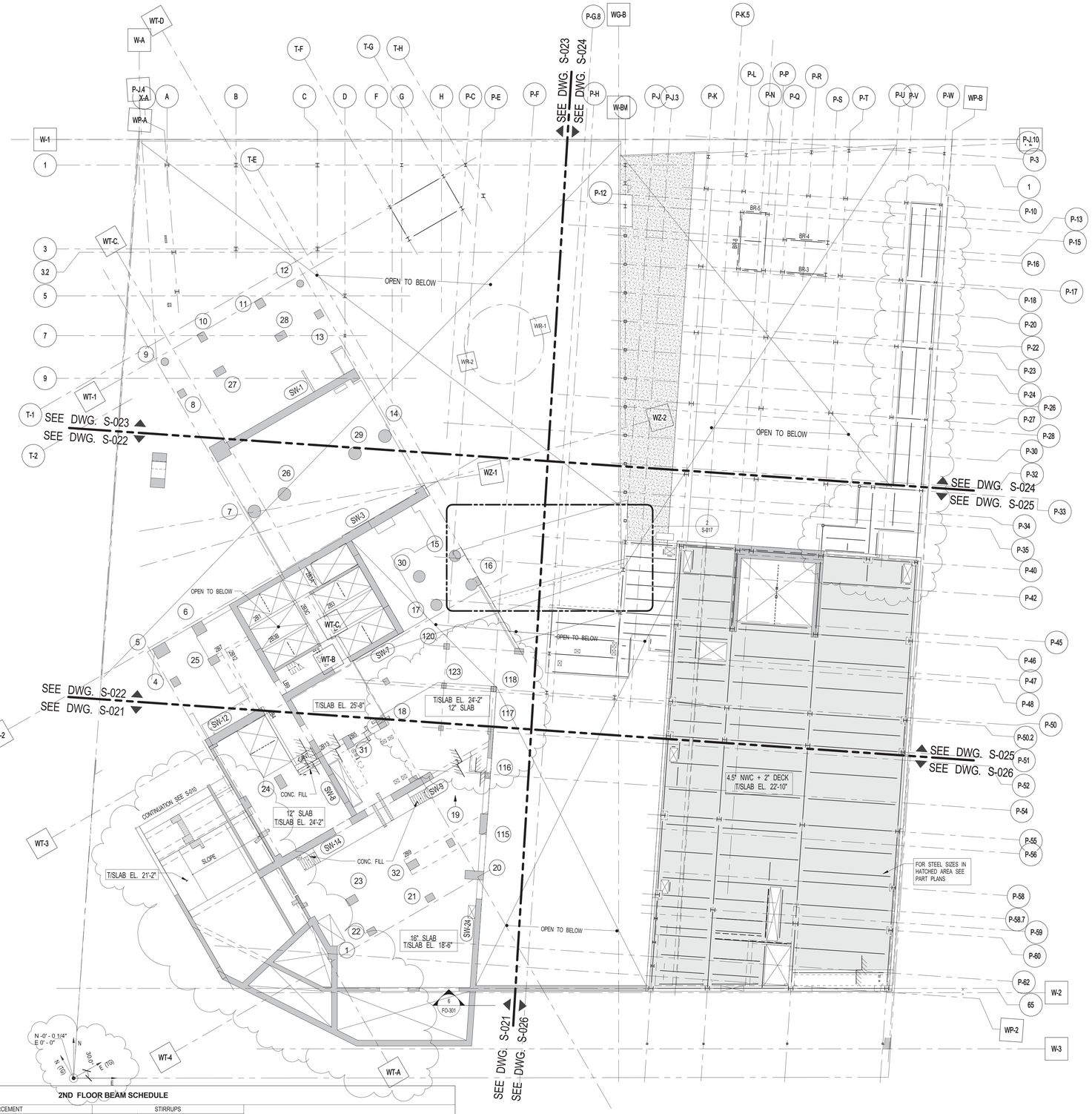

2ND FLOOR BEAM SCHEDULE

BEAM MARK	SIZE WIDTH	SIZE DEPTH	REINFORCEMENT BOTTOM CONTINUOUS	REINFORCEMENT TOP CONTINUOUS	STIRRUPS TYPE	STIRRUPS SIZE	STIRRUPS SPACING	REMARKS
2B1	12	43/36/22	3-#11	3-#11	1	#4	@6	#5@6 TYPE 1 STIRRUP @ 22" DEEP BEAM , #4@8 HORIZ. E.F. CONT.
2B3	12	16	2-#9	2-#9	1	#4	@6	
2B3A	18/14	16	3-#11	2-#11	1	#4	@6	1-#9 T&B ADD'L IN 18" WIDE BEAM
2B3B	10	31	2-#9	2-#9	1	#4	@10	
2B3C	10	24	2-#11	2-#11	1	#4	@10	
2B4	12	30	2-#10	2-#8	1	#4	@10	
2B5	24	30	4-#11	4-#9	2	#4	@12	
2B7	16	26	2-#10	2-#8	1	#4	@10	
2B9	72	130	65-#11 (5 LAYERS)	26-#11 (2 LAYERS)	3	#6	@8	#7@8 HORIZ. E.F., CONT. FOR BOTT. REINF. AT COL. 115 PROVIDE D6 LENTON TERMINATORS
2B11	18	36	3-#10	3-#9	1	#4	@10	
2B12	20	26	4-#10	4-#8	2	#4	@10	
2B13	22	30	4-#8	4-#10	2	#4	@12	
2B14	18	84/36	4-#11 @ 36" BM, 4-#9 @ 84" BM	2-#9	1	#4	@10	#4@10 HORIZ. E.F. CONT.
2B26	6	10	1-#7	1-#7	1A	#4	@3 1/2	

TYPE 1 TYPE 1A TYPE 2 TYPE 3

STIRRUP TYPES

1 S-020 — 2ND FLOOR OVERALL FRAMING PLAN
SCALE: 1/16" = 1'-0"

STEEL NOTES:
1. TOP OF SLAB AT STEEL CONSTRUCTION SHALL BE AS NOTED ON PLAN.
2. SLAB CONSTRUCTION SHALL BE 4 1/2" NORMAL WEIGHT CONCRETE ON TOP OF 2" 18GA. (Fsy=50 KSI) COMPOSITE GALVANIZED METAL DECK (TOTAL SLAB DEPTH - 6 1/2") REINFORCED WITH #5@12 TOP E.W. + #5@12 BOTTOM (FLUTE) U.O.N.
3. STUDS SHALL BE 3/4"Ø x 5" LONG. ALL STEEL BEAMS SHALL HAVE MIN 1 STUD/FT. AP THUS < > ON PLAN.
4. ALL BEAMS DIRECTLY CONNECTING TO COLUMNS/WALLS SHALL BE DESIGNED TO TRANSFER AN AXIAL FORCE (TENSION OR COMPRESSION) OF AP = 150kips. AT EACH END AP ON PLAN IN ADDITION TO ALL OTHER LOADS.
5. FOR BALANCE OF NOTES SEE DRAWING S-010.

CONCRETE NOTES:
1. TOP OF SLAB ELEVATION TO BE 25'-8" AP ON PLAN
2. FOR DETAILS OF THE INTEGRITY REINFORCEMENT SEE DRAWING S-965.
3. FOR BALANCE OF NOTES SEE DRAWING S-010.

KEY PLAN:
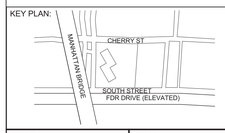

PROJECT NORTH | TRUE NORTH

DEVELOPER:
EXTELL DEVELOPMENT COMPANY
805 Third Ave, 7th Floor
New York, NY 10022
TEL: 212-712-6000 FAX: 212-712-6100

ARCHITECT OF RECORD:
AAI ARCHITECTS, P.C.
14 Wall Street, 2nd Floor
New York, NY 10005
TEL: 212-964-4040 FAX: 212-964-4090

INTERIOR DESIGNER:
MEYER DAVIS
180 Varick St, suite 404
New York, NY 10014
TEL: 212-627-5574

LANDSCAPE DESIGNER:
WEST 8 URBAN DESIGN & LANDSCAPE ARCHITECTURE P.C.
333 Hudson Street, Suite 905
New York, NY 10013
TEL: 212-285-0088 FAX: 212-285-0228

STRUCTURAL ENGINEERS:
WSP
228 East 45th Street
New York, NY 10017
TEL: 212-687-9888 FAX: 646-487-5501

MEP ENGINEERS:
ICOR ASSOCIATES, LLC
485 C Route 1 South, Suite 200
Iseline, NJ 08830
TEL: 908-272-3300 FAX: 908-272-4440

GEOTECHNICAL ENGINEERS:
LANGAN ENGINEERING & ENVIRONMENTAL SERVICES
21 Penn Plaza - 360 West 31st Street, 8th Floor
New York, NY 10001
TEL: 212.479.5400 FAX: 212.479.5444

No.	DESCRIPTION:	DATE:
1	50% SD	02-28-14
2	50% DD	08-01-14
3	DESIGN DEVELOPMENT	10-07-14
4	STEEL BID PACKAGE	02-24-15
5	CONCRETE BID PACKAGE	03-06-15
6	ADDENDUM #3	03-27-15
7	50% CONSTRUCTION DOCUMENTS	04-08-15
8	ADDENDUM #4	04-24-15
9	ADDENDUM #5	05-01-15
10	ADDENDUM #10	07-20-15
11	ISSUED FOR FILING	07-28-15
12	80% CONSTRUCTION DOCUMENTS	08-14-15
13	ASI #13	08-26-15
14	ADDENDUM #11	09-25-15
15	ADDENDUM #14	10-22-15
16	90% CONSTRUCTION DOCUMENTS	01-15-16
17	ADDENDUM #16	02-04-16
18	ASI #55	02-12-16
19	ASI #56	02-19-16
20	ASI #57	02-26-16
21	ISSUED FOR FILING	03-07-16

Discrepancies must be reported immediately to the Architect before proceeding. Only figured dimensions are to be used. Contractors must check all dimensions on site. This drawing is protected by copyright.

ALL DIMENSIONS ARE SHOWN IN IMPERIAL.

CONSULTANT: WSP

PROJECT:
252 SOUTH STREET
NEW YORK, NY

DRAWING TITLE:
2ND FLOOR OVERALL FRAMING PLAN

SEAL & SIGNATURE:
STATE OF NEW YORK · AHMAD RAHIMIAN · No. 085552 · LICENSED PROFESSIONAL ENGINEER

DATE:	02/28/14
PROJECT No:	1302510
DRAWN: CAD	REV:
CHK: CL	
SCALE:	
DWG No:	**S-020.02**
DOB PAGE No:	of

DOB EMPLOYEE STAMP:
Damian Titus
NYC Buildings
APPROVED
Under Directive 2 of 1975
AMENDED APPLICATION
Date: 04/11/2016
NYC Development Hub

DOB B-SCAN:

FILE NAME:
PLOT DATE:

DEPT OF BLDGS121805639 Job Number
E3456926184 Scan Code

30" x 42" Arch E1 - SHEET SIZE

2 PART PLAN @ EL. 18'-6" @ STAIR
3/16" = 1'-0"

1 2ND FLOOR FRAMING PLAN - PART 1
S-021
SCALE: 3/16" = 1'-0"
NOTE:
1. FOR NOTES SEE S-030

KEY PLAN:
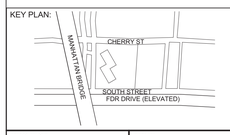

PROJECT NORTH
TRUE NORTH

DEVELOPER:
EXTELL DEVELOPMENT COMPANY
805 Third Ave, 7th Floor
New York, NY 10022
TEL: 212-712-6000 FAX: 212-712-6100

ARCHITECT OF RECORD:
AAI ARCHITECTS, P.C.
14 Wall Street, 2nd Floor
New York, NY 10005
TEL: 212-964-4040 FAX: 212-964-4090

INTERIOR DESIGNER:
MEYER DAVIS
180 Varick St, suite 404
New York, NY 10014
TEL: 212-627-5574

LANDSCAPE DESIGNER:
WEST 8 URBAN DESIGN & LANDSCAPE ARCHITECTURE P.C.
333 Hudson Street, Suite 905
New York, NY 10013
TEL: 212-285-0088 FAX: 212-285-0228

STRUCTURAL ENGINEERS:
WSP
228 East 45th Street
New York, NY 10017
TEL: 212-687-9888 FAX: 646-487-5501

MEP ENGINEERS:
ICOR ASSOCIATES, LLC
485 C Route 1 South, Suite 200
Iseline, NJ 08830
TEL: 908-272-3300 FAX: 908-272-4440

GEOTECHNICAL ENGINEERS:
LANGAN ENGINEERING & ENVIRONMENTAL SERVICES
21 Penn Plaza - 360 West 31st Street, 8th Floor
New York, NY 10001
TEL: 212.479.5400 FAX: 212.479.5444

No.	DESCRIPTION:	DATE:
1	DESIGN DEVELOPMENT	10-07-14
2	STEEL BID PACKAGE	02-24-15
3	CONCRETE BID PACKAGE	03-06-15
4	ADDENDUM #3	03-27-15
5	50% CONSTRUCTION DOCUMENTS	04-08-15
6	ADDENDUM #5	05-01-15
7	ADDENDUM #10	07-20-15
8	ISSUED FOR FILING	07-28-15
9	80% CONSTRUCTION DOCUMENTS	08-14-15
10	ADDENDUM #11	09-25-15
11	ADDENDUM #14	10-22-15
12	ADDENDUM #16	02-04-16
13	ASI #55	02-12-16
14	ASI #56	02-19-16
15	ISSUED FOR FILING	03-07-16

Discrepancies must be reported immediately to the Architect before proceeding. Only figured dimensions are to be used. Contractors must check all dimensions on site. This drawing is protected by copyright.

ALL DIMENSIONS ARE SHOWN IN IMPERIAL.

CONSULTANT:
WSP

PROJECT:
252 SOUTH STREET
NEW YORK, NY

DRAWING TITLE:
2ND FLOOR FRAMING PLAN - PART 1

SEAL & SIGNATURE:
STATE OF NEW YORK · ARMAD RAMJOHN · LICENSED PROFESSIONAL ENGINEER · No. 085507

DATE:	09/24/14
PROJECT No:	1302510
DRAWN: CAD	REV:
CHK: CL	
SCALE:	
DWG No:	**S-021.02**
DOB PAGE No:	of

DOB EMPLOYEE STAMP:
Damian Titus
Buildings
APPROVED
Under Directive 2 of 1975
AMENDED APPLICATION
Date: 04/11/2016
NYC Development Hub

DOB B-SCAN:

FILE NAME:
PLOT DATE:

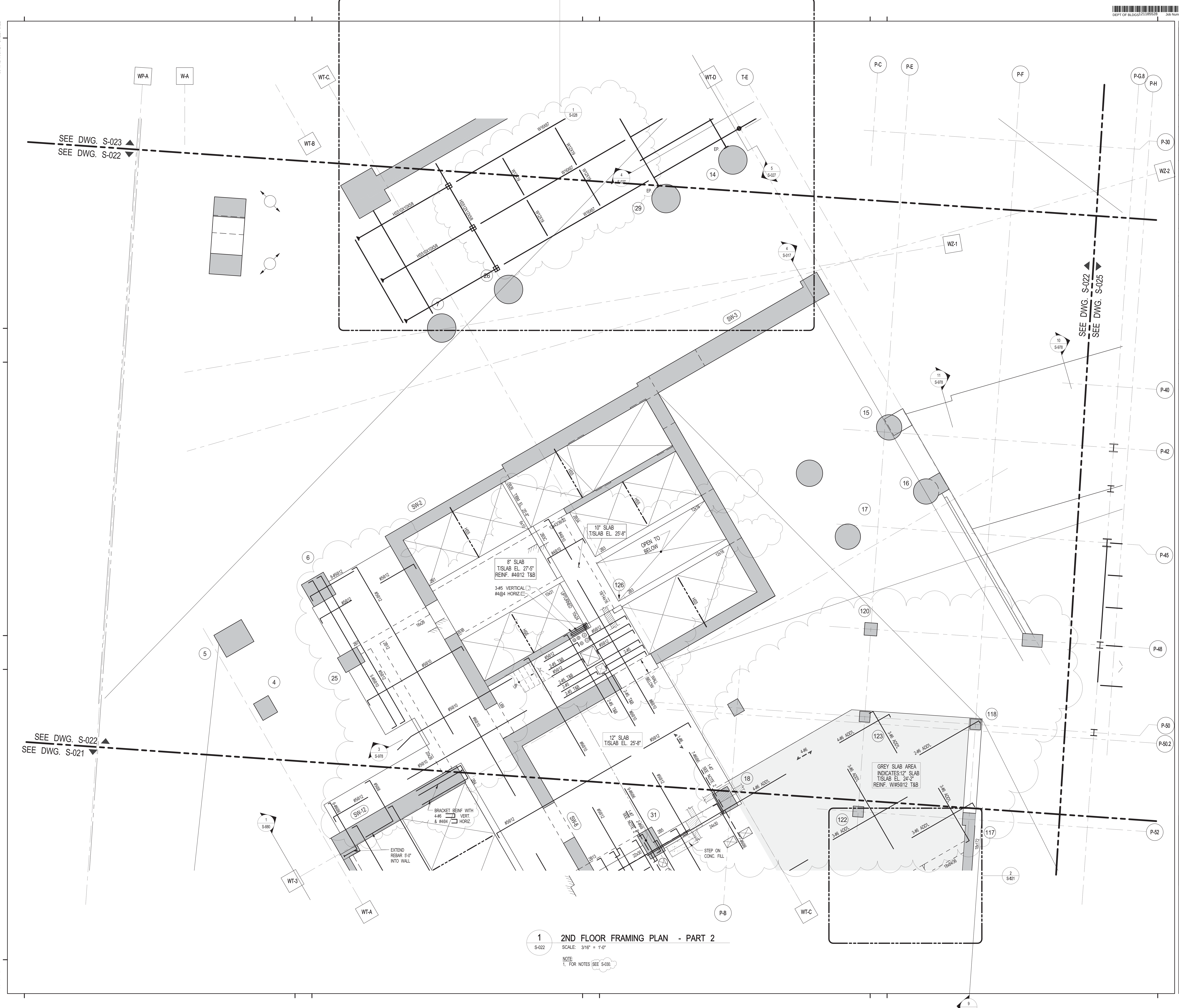

1 S-022 2ND FLOOR FRAMING PLAN - PART 2

SCALE: 3/16" = 1'-0"

NOTE:
1. FOR NOTES SEE S-030.

KEY PLAN:

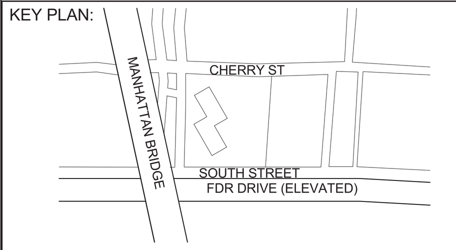

PROJECT NORTH

TRUE NORTH

DEVELOPER:
EXTELL DEVELOPMENT COMPANY
805 Third Ave, 7th Floor
New York, NY 10022
TEL: 212-712-6000 FAX: 212-712-6100

ARCHITECT OF RECORD:
AAI ARCHITECTS, P.C.
14 Wall Street, 2nd Floor
New York, NY 10005
TEL: 212-964-4040 FAX: 212-964-4090

INTERIOR DESIGNER:
MEYER DAVIS
180 Varick St, suite 404
New York, NY 10014
TEL: 212-627-5574

LANDSCAPE DESIGNER:
WEST 8 URBAN DESIGN & LANDSCAPE ARCHITECTURE P.C.
333 Hudson Street, Suite 905
New York, NY 10013
TEL: 212-285-0088 FAX: 212-285-0228

STRUCTURAL ENGINEERS:
WSP
228 East 45th Street
New York, NY 10017
TEL: 212-687-9888 FAX: 646-487-5501

MEP ENGINEERS:
ICOR ASSOCIATES, LLC
485 C Route 1 South, Suite 200
Iseline, NJ 08830
TEL: 908-272-3300 FAX: 908-272-4440

GEOTECHNICAL ENGINEERS:
LANGAN ENGINEERING & ENVIRONMENTAL SERVICES
21 Penn Plaza - 360 West 31st Street, 8th Floor
New York, NY 10001
TEL: 212.479.5400 FAX: 212.479.5444

No.	DESCRIPTION:	DATE:
1	DESIGN DEVELOPMENT	10-07-14
2	STEEL BID PACKAGE	02-24-15
3	CONCRETE BID PACKAGE	03-06-15
4	ADDENDUM #3	03-27-15
5	50% CONSTRUCTION DOCUMENTS	04-08-15
6	ADDENDUM #4	04-24-15
7	ADDENDUM #5	05-01-15
8	ADDENDUM #9	07-10-15
9	ISSUED FOR FILING	07-28-15
10	80% CONSTRUCTION DOCUMENTS	08-14-15
11	ADDENDUM #11	09-25-15
12	ADDENDUM #16	02-04-16
13	ASI #55	02-12-16
14	ASI #56	02-19-16
15	ASI #57	02-26-16
16	ASI #58	03-04-16
17	ISSUED FOR FILING	03-07-16

Discrepancies must be reported immediately to the Architect before proceeding. Only figured dimensions are to be used. Contractors must check all dimensions on site. This drawing is protected by copyright.

ALL DIMENSIONS ARE SHOWN IN IMPERIAL.

CONSULTANT: WSP

PROJECT:
252 SOUTH STREET
NEW YORK, NY

DRAWING TITLE:
2ND FLOOR FRAMING PLAN - PART 2

SEAL & SIGNATURE: STATE OF NEW YORK · AHMAD RAHIMIAN · No. 065537 · LICENSED PROFESSIONAL ENGINEER

DATE: 09/24/14
PROJECT No: 1302510
DRAWN: CAD
CHK: CL
REV:
SCALE:
DWG No: **S-022.02**
DOB PAGE No: of

DOB EMPLOYEE STAMP:
Damian Titus
Buildings
APPROVED
Under Directive 2 of 1975
AMENDED APPLICATION
Date: 04/11/2016
NYC Development Hub

DOB B-SCAN:

DEPT OF BLDGS121105529 Job Number
E-S1398821077 Scan Code

30" x 42" Arch E1 - SHEET SIZE

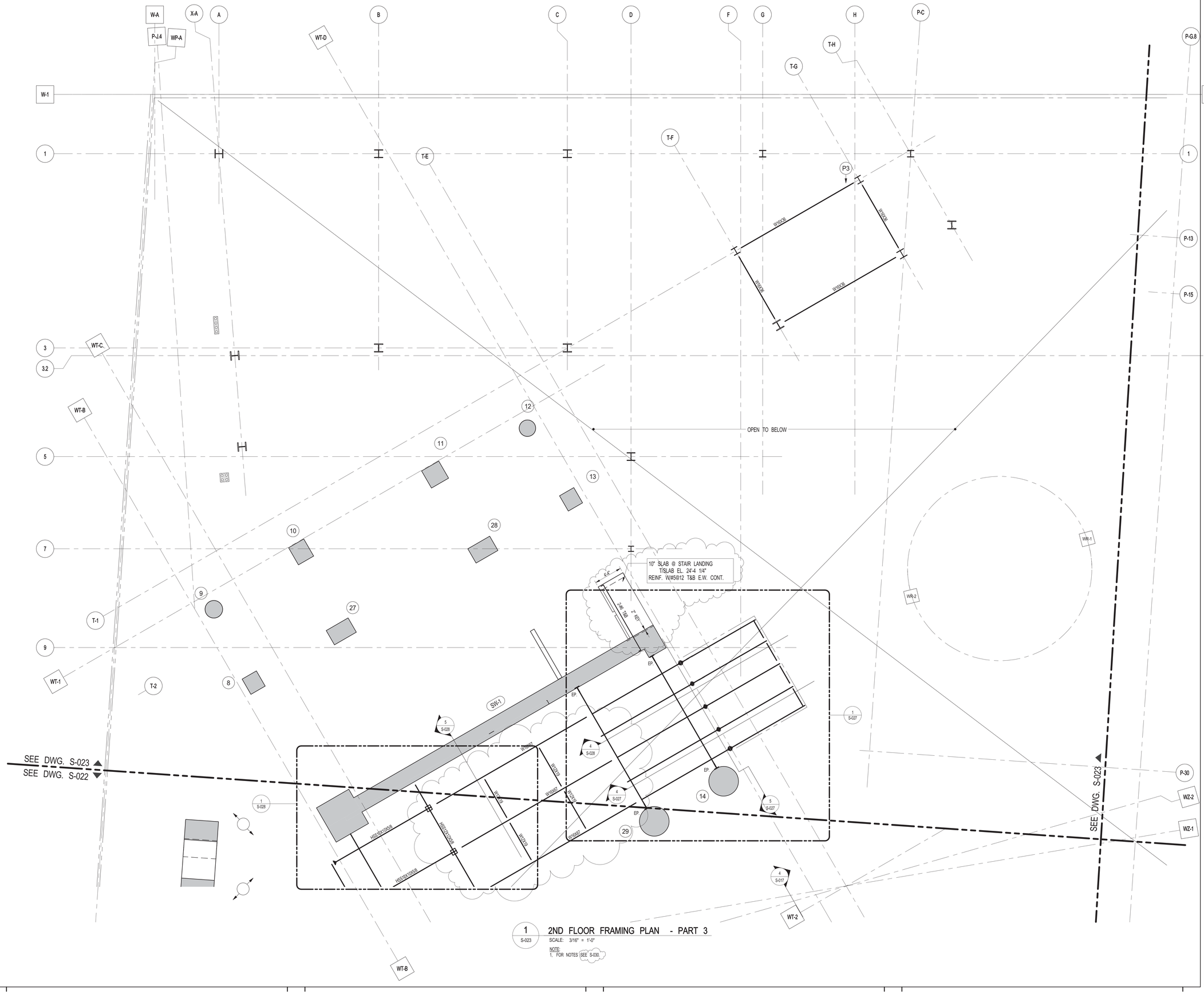

1 S-023 **2ND FLOOR FRAMING PLAN - PART 3**
SCALE: 3/16" = 1'-0"
NOTE:
1. FOR NOTES SEE S-030.

KEY PLAN:

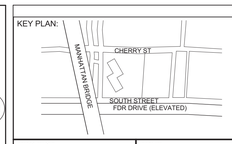

PROJECT NORTH | TRUE NORTH

DEVELOPER:
EXTELL DEVELOPMENT COMPANY
805 Third Ave, 7th Floor
New York, NY 10022
TEL: 212-712-6000 FAX: 212-712-6100

ARCHITECT OF RECORD:
AAI ARCHITECTS, P.C.
14 Wall Street, 2nd Floor
New York, NY 10005
TEL: 212-964-4040 FAX: 212-964-4090

INTERIOR DESIGNER:
MEYER DAVIS
180 Varick St, suite 404
New York, NY 10014
TEL: 212-627-5574

LANDSCAPE DESIGNER:
WEST 8 URBAN DESIGN & LANDSCAPE ARCHITECTURE P.C.
333 Hudson Street, Suite 905
New York, NY 10013
TEL: 212-285-0088 FAX: 212-285-0228

STRUCTURAL ENGINEERS:
WSP
228 East 45th Street
New York, NY 10017
TEL: 212-687-9888 FAX: 646-487-5501

MEP ENGINEERS:
ICOR ASSOCIATES, LLC
485 C Route 1 South, Suite 200
Iseline, NJ 08830
TEL: 908-272-3300 FAX: 908-272-4440

GEOTECHNICAL ENGINEERS:
LANGAN ENGINEERING & ENVIRONMENTAL SERVICES
21 Penn Plaza - 360 West 31st Street, 8th Floor
New York, NY 10001
TEL: 212.479.5400 FAX: 212.479.5444

No.	DESCRIPTION:	DATE:
1	DESIGN DEVELOPMENT	10-07-14
2	STEEL BID PACKAGE	02-24-15
3	CONCRETE BID PACKAGE	03-06-15
4	ADDENDUM #3	03-27-15
5	50% CONSTRUCTION DOCUMENTS	04-08-15
6	ADDENDUM #4	04-24-15
7	ADDENDUM #9	07-10-15
8	ISSUED FOR FILING	07-28-15
9	80% CONSTRUCTION DOCUMENTS	08-14-15
10	ASI #55	02-12-16
11	ISSUED FOR FILING	03-07-16

Discrepancies must be reported immediately to the Architect before proceeding. Only figured dimensions are to be used. Contractors must check all dimensions on site. This drawing is protected by copyright.

ALL DIMENSIONS ARE SHOWN IN IMPERIAL.

CONSULTANT:
WSP

PROJECT:
252 SOUTH STREET
NEW YORK, NY

DRAWING TITLE:
2ND FLOOR FRAMING PLAN - PART 3

SEAL & SIGNATURE:
STATE OF NEW YORK ARMAD RAHIMIAN No. 065552 LICENSED PROFESSIONAL ENGINEER

DATE: 09/24/14
PROJECT No: 1302510
DRAWN: CAD REV:
CHK: CL
SCALE:
DWG No: **S-023.02**
DOB PAGE No: of

DOB EMPLOYEE STAMP:
Damian Titus
Buildings
APPROVED
Under Directive 2 of 1975
AMENDED APPLICATION
Date: 04/11/2016
NYC Development Hub

DOB B-SCAN:

FILE NAME:
PLOT DATE:

DEPT OF BLDGS121185539 Job Number
E-S6092222444 Scan Code

30" x 42" Arch E1 - SHEET SIZE

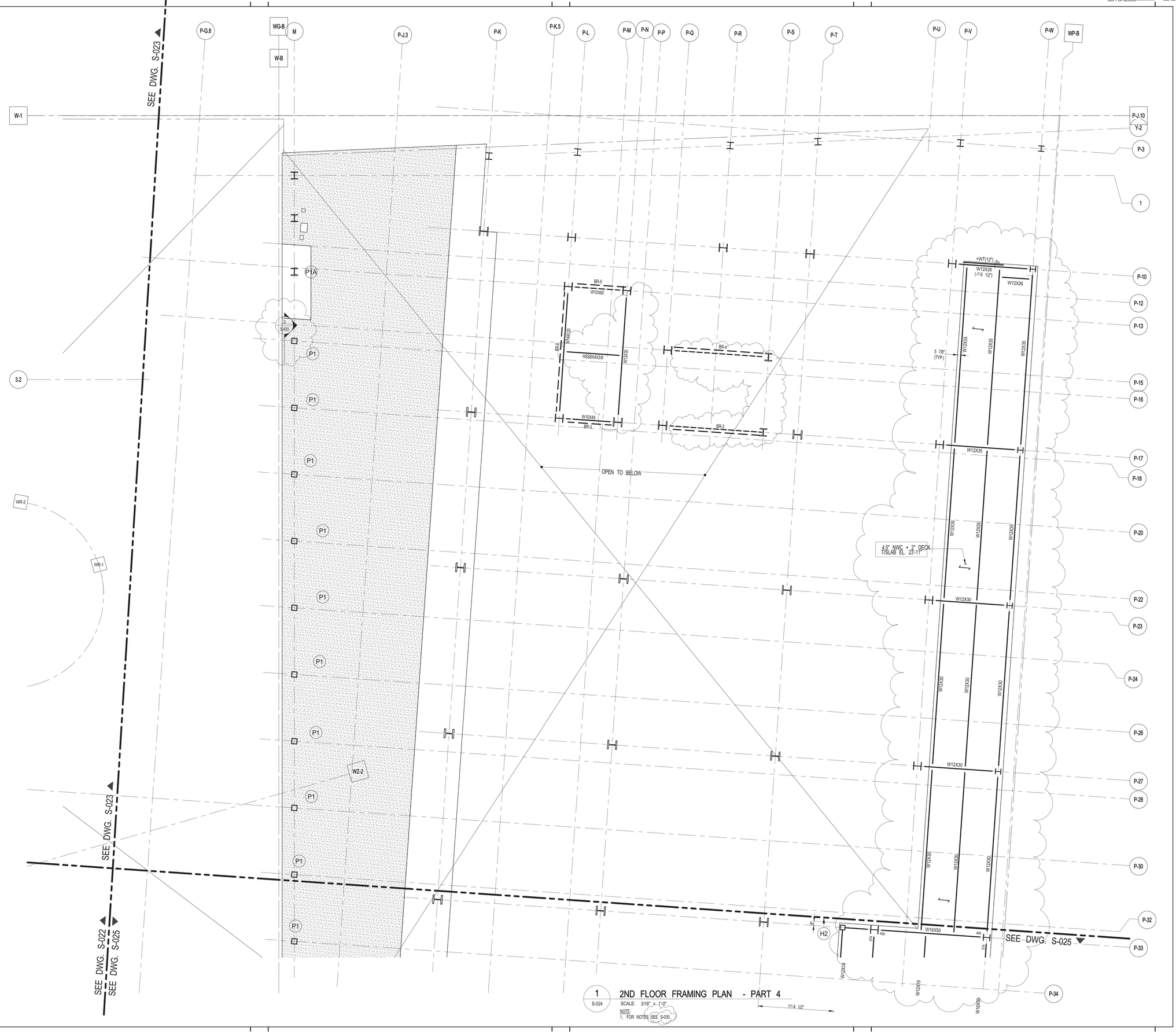

1 S-024 2ND FLOOR FRAMING PLAN - PART 4

SCALE: 3/16" = 1'-0"

NOTE:
1. FOR NOTES SEE S-030.

11'-4 1/2"

FILE NAME:
PLOT DATE:

KEY PLAN:

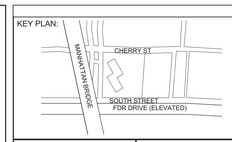

PROJECT NORTH

TRUE NORTH

DEVELOPER:
EXTELL DEVELOPMENT COMPANY
805 Third Ave, 7th Floor
New York, NY 10022
TEL: 212-712-6000 FAX: 212-712-6100

ARCHITECT OF RECORD:
AAI ARCHITECTS, P.C.
14 Wall Street, 2nd Floor
New York, NY 10005
TEL: 212-964-4040 FAX: 212-964-4090

INTERIOR DESIGNER:
MEYER DAVIS
180 Varick St, suite 404
New York, NY 10014
TEL: 212-627-5574

LANDSCAPE DESIGNER:
WEST 8 URBAN DESIGN & LANDSCAPE ARCHITECTURE P.C.
333 Hudson Street, Suite 905
New York, NY 10013
TEL: 212-285-0088 FAX: 212-285-0228

STRUCTURAL ENGINEERS:
WSP
228 East 45th Street
New York, NY 10017
TEL: 212-687-9888 FAX: 646-487-5501

MEP ENGINEERS:
ICOR ASSOCIATES, LLC
485 C Route 1 South, Suite 200
Iseline, NJ 08830
TEL: 908-272-3300 FAX: 908-272-4440

GEOTECHNICAL ENGINEERS:
LANGAN ENGINEERING & ENVIRONMENTAL SERVICES
21 Penn Plaza - 360 West 31st Street, 8th Floor
New York, NY 10001
TEL: 212.479.5400 FAX: 212.479.5444

No.	DESCRIPTION:	DATE:
1	DESIGN DEVELOPMENT	10-07-14
2	STEEL BID PACKAGE	02-24-15
3	ADDENDUM #3	03-27-15
4	50% CONSTRUCTION DOCUMENTS	04-08-15
5	ADDENDUM #4	04-24-15
6	ADDENDUM #10	07-20-15
7	ISSUED FOR FILING	07-28-15
8	80% CONSTRUCTION DOCUMENTS	08-14-15
9	ADDENDUM #11	09-25-15
10	90% CONSTRUCTION DOCUMENTS	01-15-16
11	ADDENDUM #16	02-04-16
12	ASI #58	03-04-16
13	ISSUED FOR FILING	03-07-16

Discrepancies must be reported immediately to the Architect before proceeding. Only figured dimensions are to be used. Contractors must check all dimensions on site. This drawing is protected by copyright.

ALL DIMENSIONS ARE SHOWN IN IMPERIAL.

CONSULTANT:
WSP

PROJECT:
252 SOUTH STREET
NEW YORK, NY

DRAWING TITLE:
2ND FLOOR FRAMING PLAN - PART 4

SEAL & SIGNATURE:

DATE:	09/24/14
PROJECT No:	1302510
DRAWN: CAD	REV:
CHK: CL	
SCALE:	
DWG No:	**S-024.02**
DOB PAGE No:	of

DOB EMPLOYEE STAMP:

Damian Titus
Buildings
APPROVED
Under Directive 2 of 1975
AMENDED APPLICATION
Date: 04/11/2016
NYC Development Hub

DOB B-SCAN:

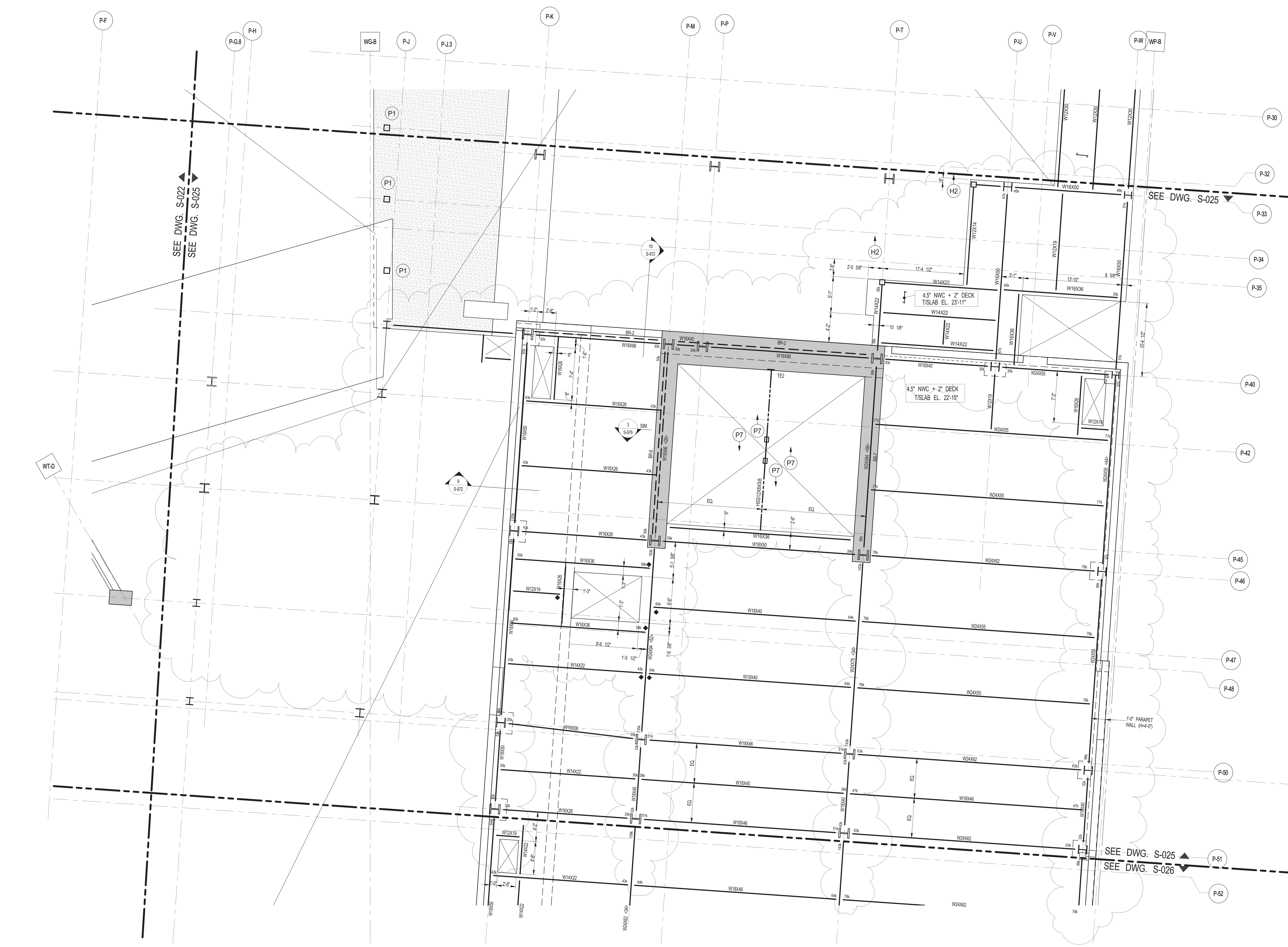

1 — S-025

2ND FLOOR FRAMING PLAN - PART 5

SCALE: 3/16" = 1'-0"

NOTE:
1. FOR NOTES SEE S-030.

KEY PLAN:

CHERRY ST
MANHATTAN BRIDGE
SOUTH STREET
FDR DRIVE (ELEVATED)

PROJECT NORTH — TRUE NORTH

DEVELOPER:
EXTELL DEVELOPMENT COMPANY
805 Third Ave, 7th Floor
New York, NY 10022
TEL: 212-712-6000 FAX: 212-712-6100

ARCHITECT OF RECORD:
AAI ARCHITECTS, P.C.
14 Wall Street, 2nd Floor
New York, NY 10005
TEL: 212-964-4040 FAX: 212-964-4090

INTERIOR DESIGNER:
MEYER DAVIS
180 Varick St, suite 404
New York, NY 10014
TEL: 212-627-5574

LANDSCAPE DESIGNER:
WEST 8 URBAN DESIGN & LANDSCAPE ARCHITECTURE P.C.
333 Hudson Street, Suite 905
New York, NY 10013
TEL: 212-285-0088 FAX: 212-285-0228

STRUCTURAL ENGINEERS:
WSP
228 East 45th Street
New York, NY 10017
TEL: 212-687-9888 FAX: 646-487-5501

MEP ENGINEERS:
ICOR ASSOCIATES, LLC
485 C Route 1 South, Suite 200
Iseline, NJ 08830
TEL: 908-272-3300 FAX: 908-272-4440

GEOTECHNICAL ENGINEERS:
LANGAN ENGINEERING & ENVIRONMENTAL SERVICES
21 Penn Plaza - 360 West 31st Street, 8th Floor
New York, NY 10001
TEL: 212.479.5400 FAX: 212.479.5444

No.	DESCRIPTION:	DATE:
1	DESIGN DEVELOPMENT	10-07-14
2	STEEL BID PACKAGE	02-24-15
3	ADDENDUM #3	03-27-15
4	50% CONSTRUCTION DOCUMENTS	04-08-15
5	ADDENDUM #4	04-24-15
6	ISSUED FOR FILING	07-28-15
7	80% CONSTRUCTION DOCUMENTS	08-14-15
8	ASI #13	08-26-15
9	90% CONSTRUCTION DOCUMENTS	01-15-16
10	ADDENDUM #16	02-04-16
11	ASI #55	02-12-16
12	ASI #58	03-04-16
13	ISSUED FOR FILING	03-07-16

Discrepancies must be reported immediately to the Architect before proceeding. Only figured dimensions are to be used. Contractors must check all dimensions on site. This drawing is protected by copyright.

ALL DIMENSIONS ARE SHOWN IN IMPERIAL.

CONSULTANT: WSP

PROJECT:
252 SOUTH STREET
NEW YORK, NY

DRAWING TITLE:
2ND FLOOR FRAMING PLAN - PART 5

SEAL & SIGNATURE: STATE OF NEW YORK — LICENSED PROFESSIONAL ENGINEER

DATE:	09/24/14
PROJECT No:	1302510
DRAWN:	CAD
CHK:	CL
SCALE:	
DWG No:	S-025.02
DOB PAGE No:	of

DOB EMPLOYEE STAMP: — DOB B-SCAN:

Damian Titus
NYC Buildings
APPROVED
Under Directive 1 of 1975
AMENDED APPLICATION
Date: 04/11/2016
NYC Development Hub

121185528 Job Number
ES897337262 Scan Code

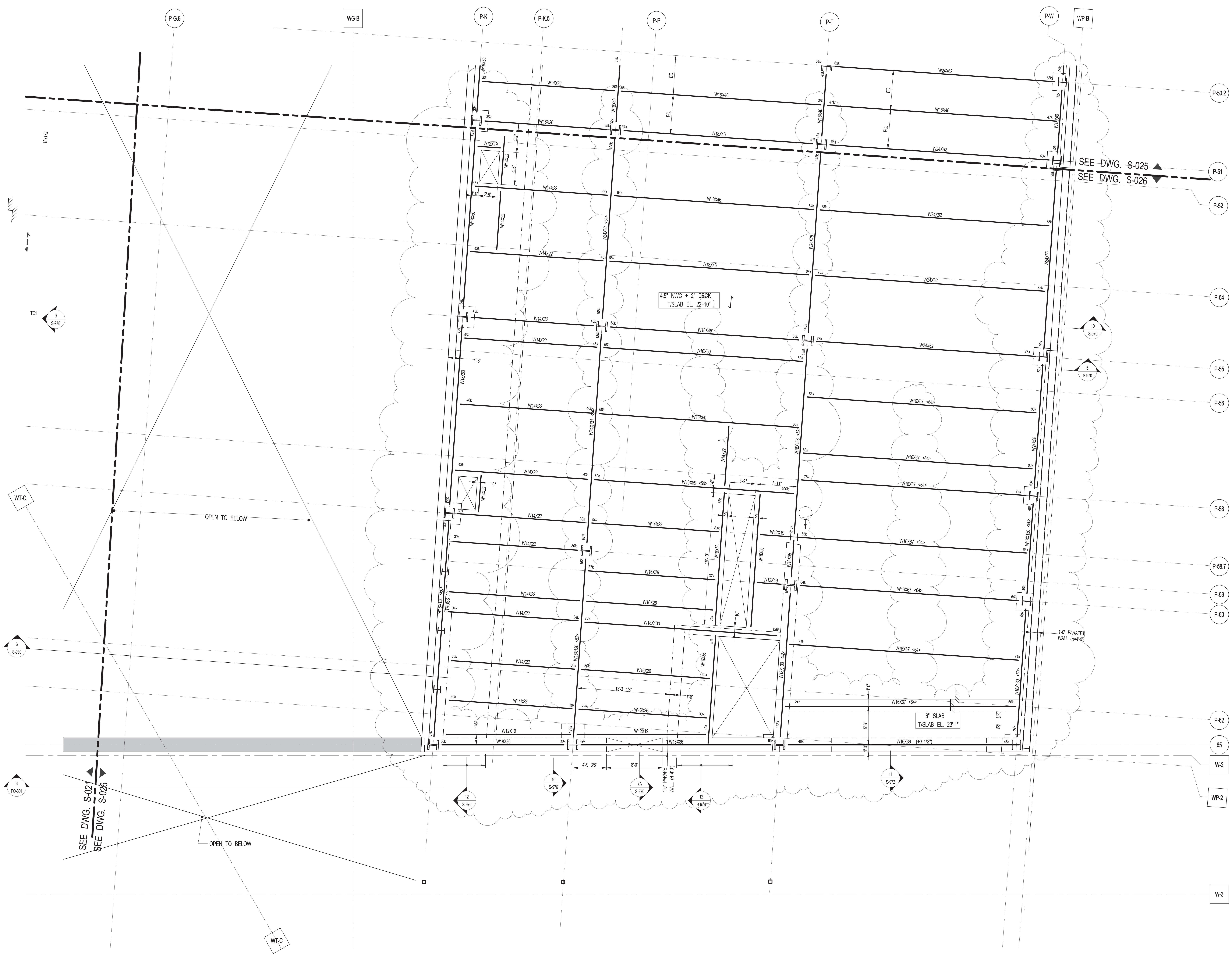

1 S-026 2ND FLOOR FRAMING PLAN - PART 6

SCALE: 3/16" = 1'-0"

NOTE:
1. FOR NOTES SEE S-030.

KEY PLAN:

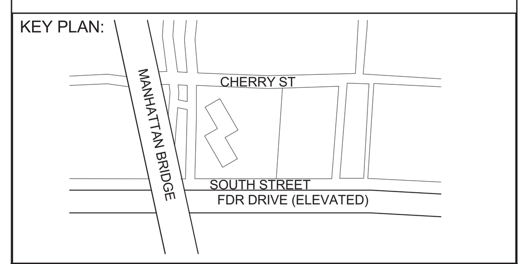

PROJECT NORTH

TRUE NORTH

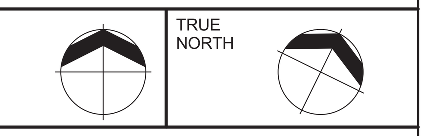

DEVELOPER:
EXTELL DEVELOPMENT COMPANY
805 Third Ave, 7th Floor
New York, NY 10022
TEL: 212-712-6000 FAX: 212-712-6100

ARCHITECT OF RECORD:
AAI ARCHITECTS, P.C.
14 Wall Street, 2nd Floor
New York, NY 10005
TEL: 212-964-4040 FAX: 212-964-4090

INTERIOR DESIGNER:
MEYER DAVIS
180 Varick St, suite 404
New York, NY 10014
TEL: 212-627-5574

LANDSCAPE DESIGNER:
WEST 8 URBAN DESIGN & LANDSCAPE ARCHITECTURE P.C.
333 Hudson Street, Suite 905
New York, NY 10013
TEL: 212-285-0088 FAX: 212-285-0228

STRUCTURAL ENGINEERS:
WSP
228 East 45th Street
New York, NY 10017
TEL: 212-687-9888 FAX: 646-487-5501

MEP ENGINEERS:
ICOR ASSOCIATES, LLC
485 C Route 1 South, Suite 200
Iseline, NJ 08830
TEL: 908-272-3300 FAX: 908-272-4440

GEOTECHNICAL ENGINEERS:
LANGAN ENGINEERING & ENVIRONMENTAL SERVICES
21 Penn Plaza - 360 West 31st Street, 8th Floor
New York, NY 10001
TEL: 212.479.5400 FAX: 212.479.5444

No.	DESCRIPTION:	DATE:
1	DESIGN DEVELOPMENT	10-07-14
2	STEEL BID PACKAGE	02-24-15
3	ADDENDUM #3	03-27-15
4	50% CONSTRUCTION DOCUMENTS	04-08-15
5	ADDENDUM #4	04-24-15
6	ISSUED FOR FILING	07-28-15
7	80% CONSTRUCTION DOCUMENTS	08-14-15
8	ASI #13	08-26-15
9	ADDENDUM #14	10-22-15
10	90% CONSTRUCTION DOCUMENTS	01-15-16
11	ADDENDUM #16	02-04-16
12	ASI #55	02-12-16
13	ISSUED FOR FILING	03-07-16

Discrepancies must be reported immediately to the Architect before proceeding. Only figured dimensions are to be used. Contractors must check all dimensions on site. This drawing is protected by copyright.

ALL DIMENSIONS ARE SHOWN IN IMPERIAL.

CONSULTANT:
WSP

PROJECT:
252 SOUTH STREET
NEW YORK, NY

DRAWING TITLE:
2ND FLOOR FRAMING PLAN - PART 6

SEAL & SIGNATURE:

DATE:	09/24/14
PROJECT No:	1302510
DRAWN:	CAD
CHK:	CL
SCALE:	
REV:	
DWG No:	S-026.02
DOB PAGE No:	of

DOB EMPLOYEE STAMP:

Damian Titus
Buildings
APPROVED
Under Directive 2 of 1975
AMENDED APPLICATION
Date: 04/11/2016
NYC Development Hub

DOB B-SCAN:

DEPT OF BLDGS121185539 Job Number
E320946835 Scan Code
30" x 42" Arch E1 - SHEET SIZE

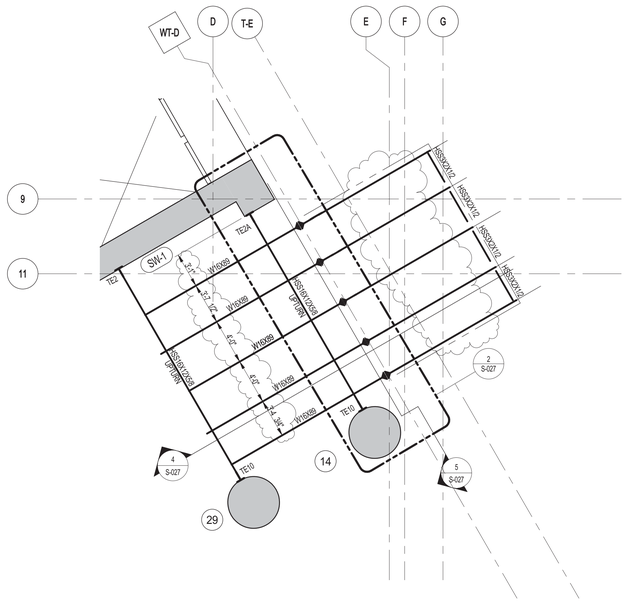

1 S-027 LOBBY CANOPY FRAMING PLAN
SCALE: 3/16" = 1'-0"

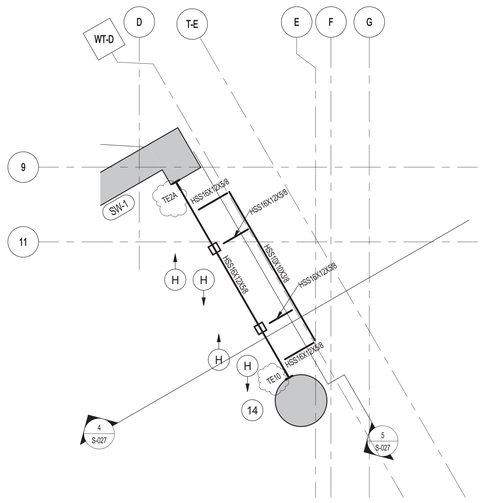

2 S-027 INTERMEDIATE LOBBY FRAMING PLAN
SCALE: 3/16" = 1'-0"

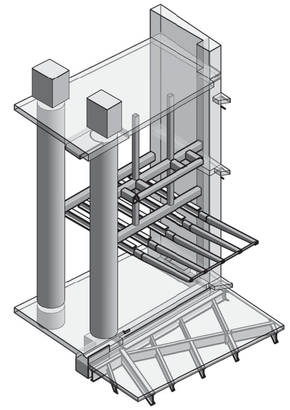

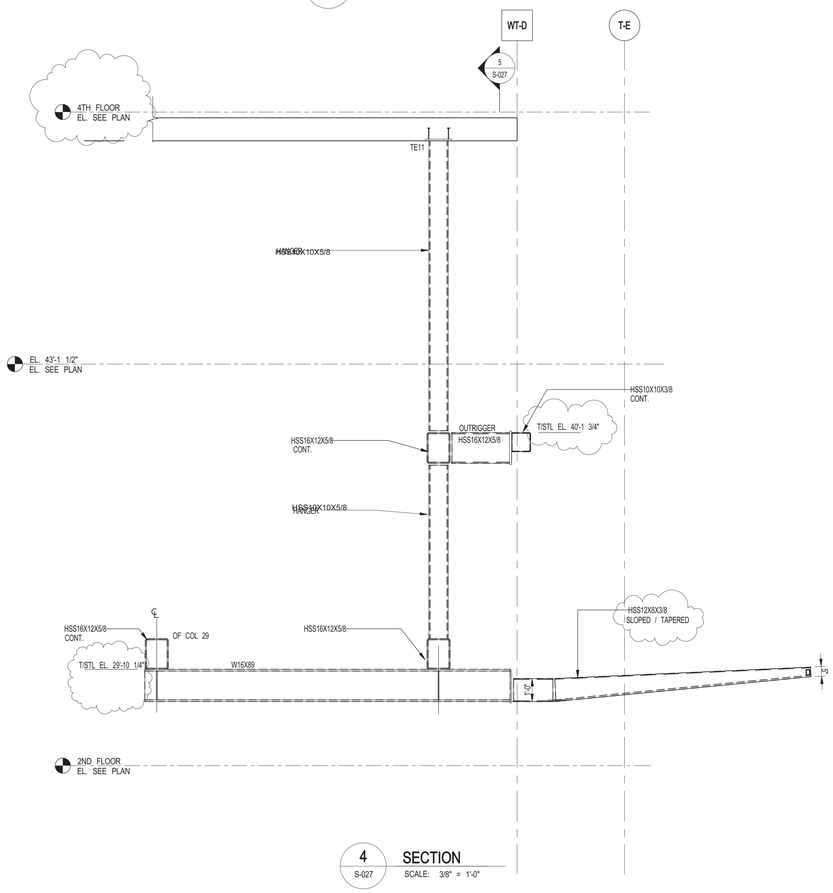

4 S-027 SECTION
SCALE: 3/8" = 1'-0"

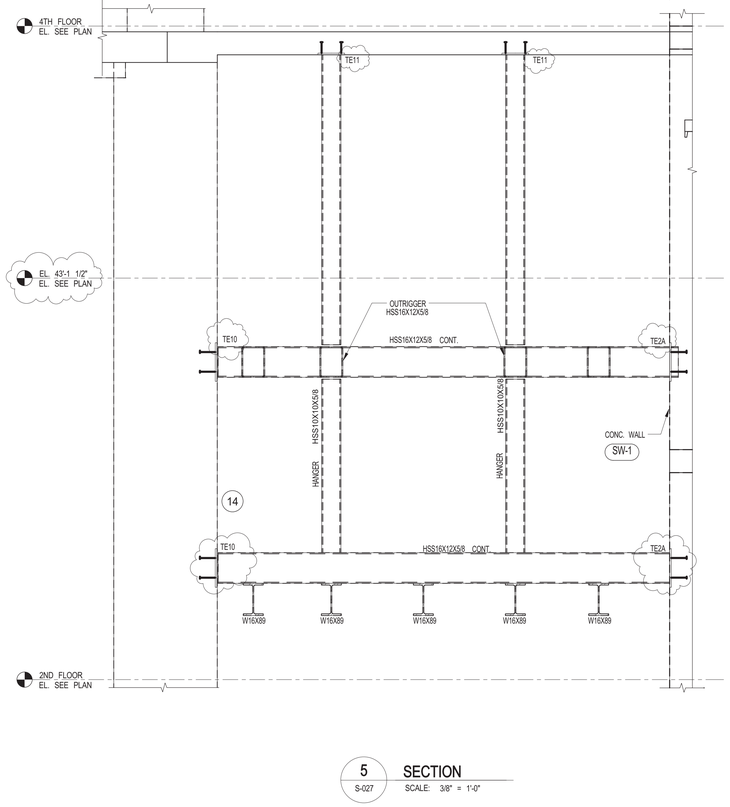

5 S-027 SECTION
SCALE: 3/8" = 1'-0"

KEY PLAN:

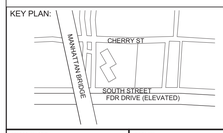

PROJECT NORTH

TRUE NORTH

DEVELOPER:
EXTELL DEVELOPMENT COMPANY
805 Third Ave, 7th Floor
New York, NY 10022
TEL: 212-712-6000 FAX: 212-712-6100

ARCHITECT OF RECORD:
AAI ARCHITECTS, P.C.
14 Wall Street, 2nd Floor
New York, NY 10005
TEL: 212-964-4040 FAX: 212-964-4090

INTERIOR DESIGNER:
MEYER DAVIS
180 Varick St, suite 404
New York, NY 10014
TEL: 212-627-5574

LANDSCAPE DESIGNER:
WEST 8 URBAN DESIGN & LANDSCAPE ARCHITECTURE P.C.
333 Hudson Street, Suite 905
New York, NY 10013
TEL: 212-285-0088 FAX: 212-285-0228

STRUCTURAL ENGINEERS:
WSP
228 East 45th Street
New York, NY 10017
TEL: 212-687-9888 FAX: 646-487-5501

MEP ENGINEERS:
ICOR ASSOCIATES, LLC
485 C Route 1 South, Suite 200
Iseline, NJ 08830
TEL: 908-272-3300 FAX: 908-272-4440

GEOTECHNICAL ENGINEERS:
LANGAN ENGINEERING & ENVIRONMENTAL SERVICES
21 Penn Plaza - 360 West 31st Street, 8th Floor
New York, NY 10001
TEL: 212.479.5400 FAX: 212.479.5444

No.	DESCRIPTION:	DATE:
1	ADDENDUM #9	07-10-15
2	ISSUED FOR FILING	07-28-15
3	80% CONSTRUCTION DOCUMENTS	08-14-15
4	ASI #13	08-26-15
5	ASI #56	02-19-16
6	ASI #58	03-04-16
7	ISSUED FOR FILING	03-07-16

Discrepancies must be reported immediately to the Architect before proceeding. Only figured dimensions are to be used. Contractors must check all dimensions on site. This drawing is protected by copyright.

ALL DIMENSIONS ARE SHOWN IN IMPERIAL.

CONSULTANT:
WSP

PROJECT:
252 SOUTH STREET
NEW YORK, NY

DRAWING TITLE:
FRAMING PLAN OF CANOPY AT LOBBY EAST

SEAL & SIGNATURE:

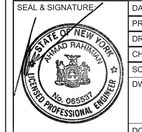

DATE:	07/08/15
PROJECT No:	1302510
DRAWN: CAD	REV:
CHK: CL	
SCALE: As indicated	
DWG No:	**S-027.01**
DOB PAGE No:	of

DOB EMPLOYEE STAMP:

Damian Titus
Buildings
APPROVED
Under Directive 2 of 1975
AMENDED APPLICATION
Date: 04/11/2016
NYC Development Hub

DOB B-SCAN:

FILE NAME:
PLOT DATE:

DEPT OF BLDGS121305639 Job Number
ES1005315644 Scan Code

30" x 42" Arch E1 - SHEET SIZE

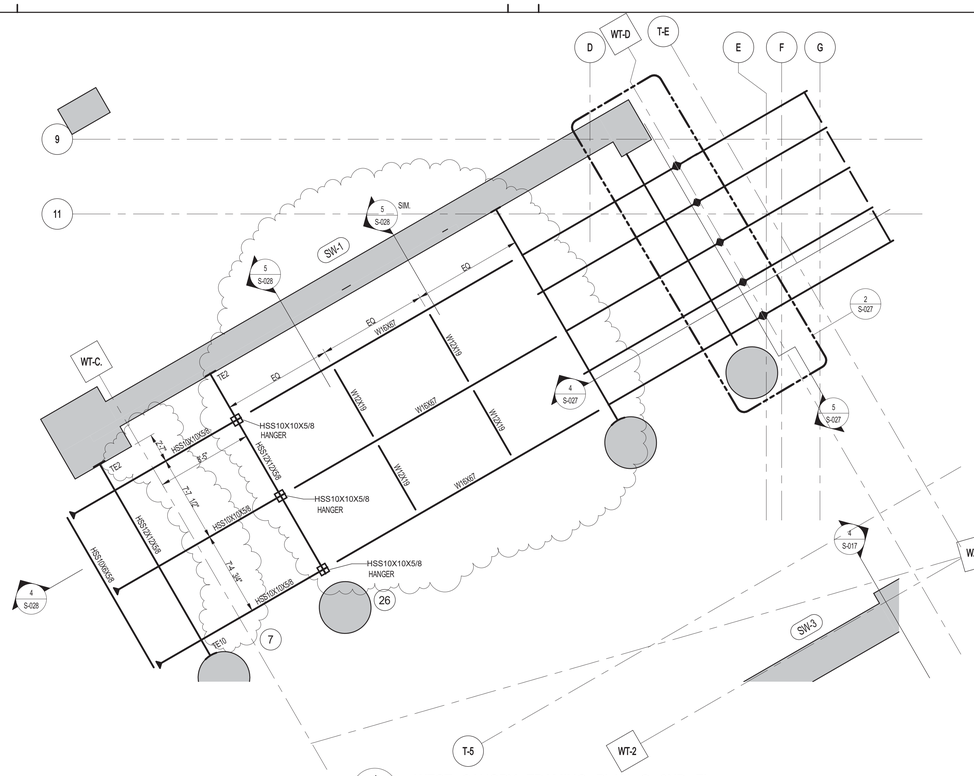

1 S-028 WEST CANOPY FRAMING PLAN @ 2ND FL
SCALE: 3/16" = 1'-0"

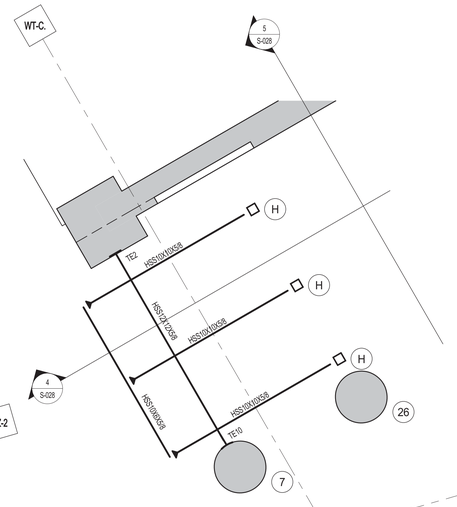

2 S-028 WEST CANOPY FRAMING PLAN @ 3RD FL
SCALE: 3/16" = 1'-0"

3 S-028 WEST CANOPY FRAMING PLAN @ 4TH FL
SCALE: 3/16" = 1'-0"

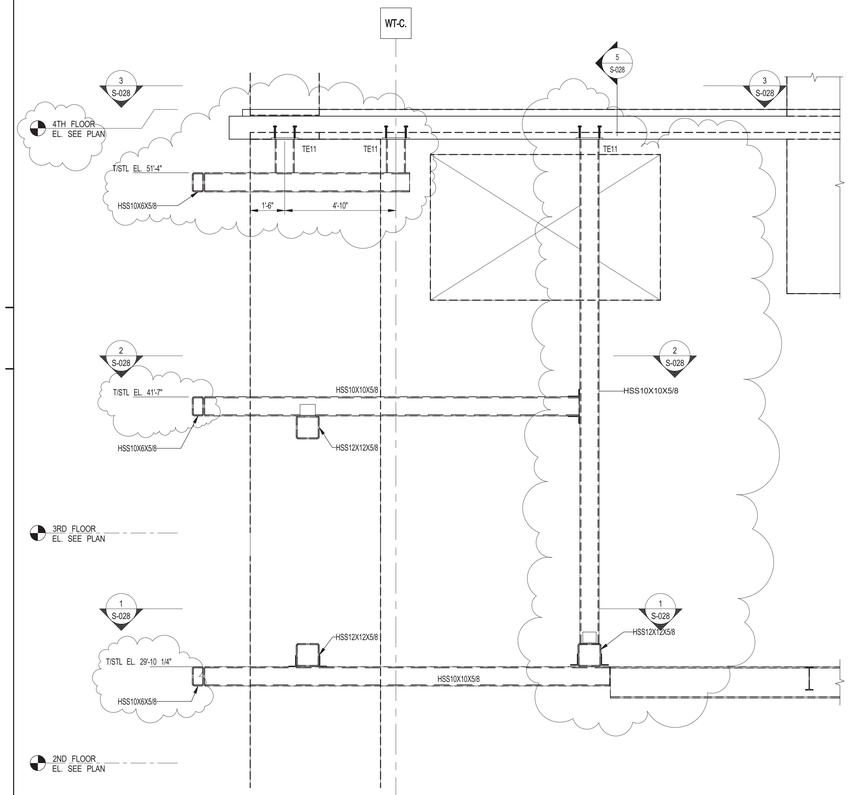

4 S-028 SECTION
SCALE: 3/8" = 1'-0"

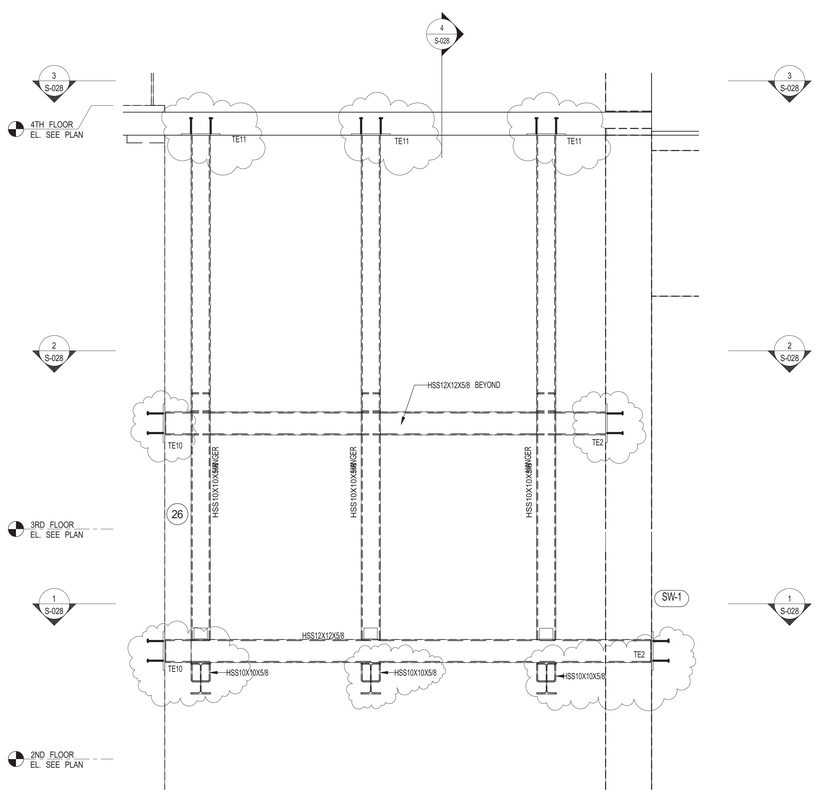

5 S-028 SECTION
SCALE: 3/8" = 1'-0"

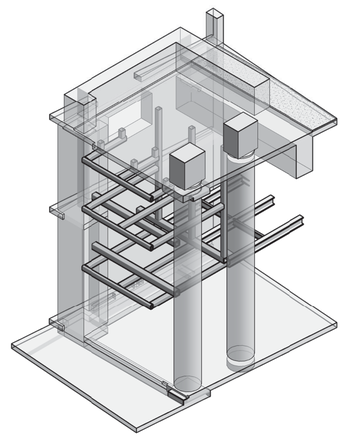

KEY PLAN:
CHERRY ST
MANHATTAN BRIDGE
SOUTH STREET
FDR DRIVE (ELEVATED)

PROJECT NORTH
TRUE NORTH

DEVELOPER:
EXTELL DEVELOPMENT COMPANY
805 Third Ave, 7th Floor
New York, NY 10022
TEL: 212-712-6000 FAX: 212-712-6100

ARCHITECT OF RECORD:
AAI ARCHITECTS, P.C.
14 Wall Street, 2nd Floor
New York, NY 10005
TEL: 212-964-4040 FAX: 212-964-4090

INTERIOR DESIGNER:
MEYER DAVIS
180 Varick St, suite 404
New York, NY 10014
TEL: 212-627-5574

LANDSCAPE DESIGNER:
WEST 8 URBAN DESIGN & LANDSCAPE ARCHITECTURE P.C.
333 Hudson Street, Suite 905
New York, NY 10013
TEL: 212-285-0088 FAX: 212-285-0228

STRUCTURAL ENGINEERS:
WSP
228 East 45th Street
New York, NY 10017
TEL: 212-687-9888 FAX: 646-487-5501

MEP ENGINEERS:
ICOR ASSOCIATES, LLC
485 C Route 1 South, Suite 200
Iseline, NJ 08830
TEL: 908-272-3300 FAX: 908-272-4440

GEOTECHNICAL ENGINEERS:
LANGAN ENGINEERING & ENVIRONMENTAL SERVICES
21 Penn Plaza - 360 West 31st Street, 8th Floor
New York, NY 10001
TEL: 212.479.5400 FAX: 212.479.5444

No.	DESCRIPTION:	DATE:
1	ADDENDUM #9	07-10-15
2	ISSUED FOR FILING	07-28-15
3	80% CONSTRUCTION DOCUMENTS	08-14-15
4	ASI #13	08-26-15
5	ASI #56	02-19-16
6	ASI #58	03-04-16
7	ISSUED FOR FILING	03-07-16

Discrepancies must be reported immediately to the Architect before proceeding. Only figured dimensions are to be used. Contractors must check all dimensions on site. This drawing is protected by copyright.

ALL DIMENSIONS ARE SHOWN IN IMPERIAL.

CONSULTANT:
WSP

PROJECT:
252 SOUTH STREET
NEW YORK, NY

DRAWING TITLE:
FRAMING PLAN OF CANOPY AT LOBBY WEST

SEAL & SIGNATURE:
STATE OF NEW YORK · ARVIND RAMNATH · No. 085557 · LICENSED PROFESSIONAL ENGINEER

DATE:	07/09/15
PROJECT No:	1302510
DRAWN: CAD	REV:
CHK: CL	
SCALE: As indicated	

DWG No:
S-028.01

DOB PAGE No: of

DOB EMPLOYEE STAMP:
Damian Titus
Buildings
APPROVED
Under Directive 2 of 1975
AMENDED APPLICATION
Date: 04/11/2016
NYC Development Hub

DOB B-SCAN:

FILE NAME:
PLOT DATE:

DEPT OF BLDGS 121185539 Job Number
E1521606825 Scan Code

30" x 42" Arch E1 - SHEET SIZE

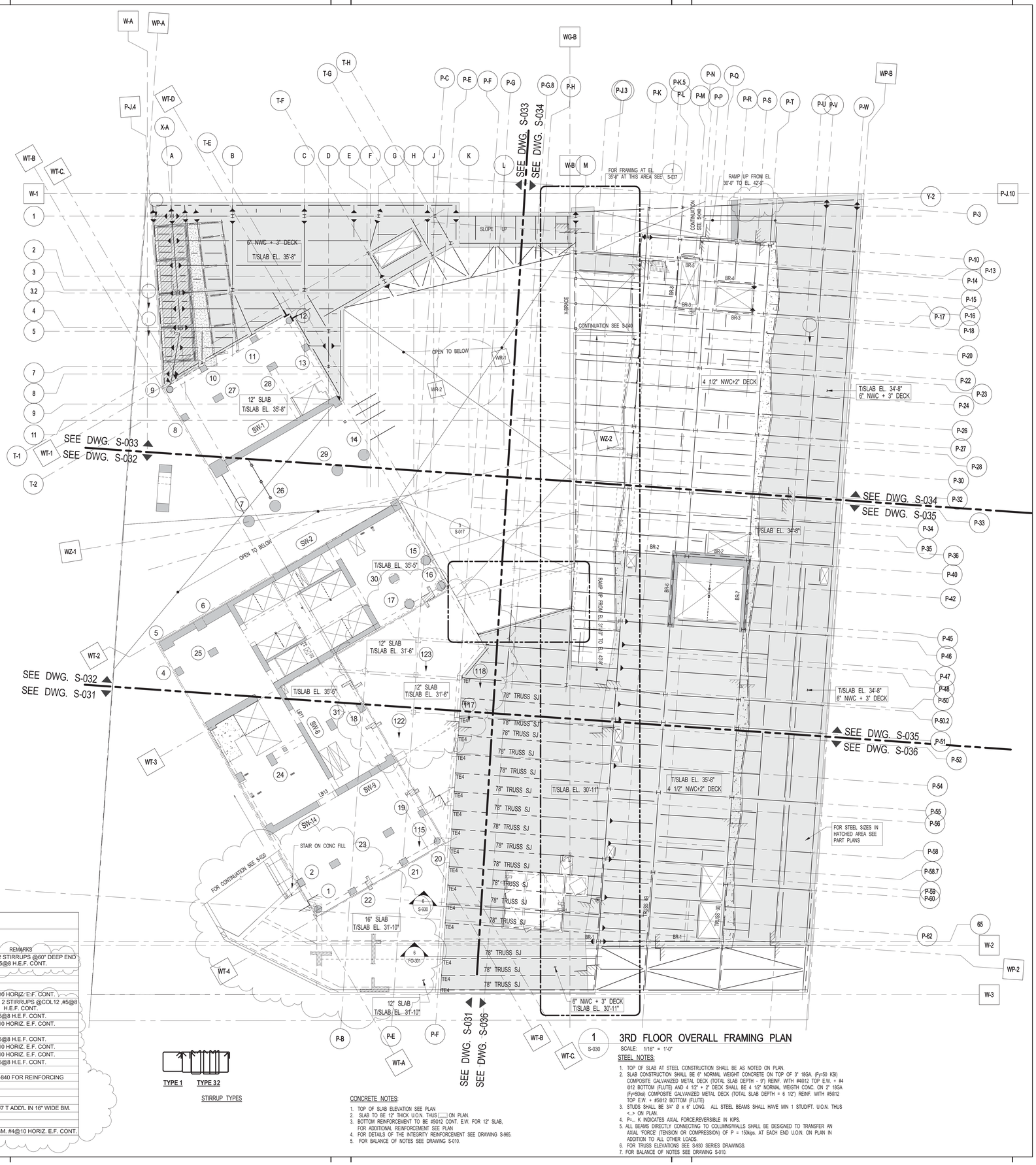

3RD FLOOR BEAM SCHEDULE

BEAM MARK	SIZE WIDTH	SIZE DEPTH	REINFORCEMENT BOTTOM CONTINUOUS	REINFORCEMENT TOP CONTINUOUS	STIRRUPS TYPE	STIRRUPS SIZE	STIRRUPS SPACING	REMARKS
3B1	26	60 /30	4-#11	4-#11	2	#4	@12	#5@4 TYPE 2 STIRRUPS @60" DEEP END #5@8 H.E.F. CONT.
3B2	26	30	4-#10	4-#9	2	#4	@12	
3B3	18	30	2-#9	2-#9	1	#4	@12	
3B4	32	30	6-#11	4-#11	2	#4	@12	
3B5	26	59	5-#10	5-#10	2	#4	@12	#4@10 HORIZ. E.F. CONT.
3B6	36	30	4-#11	4-#11	2	#4	@12	6-#5@4 TYPE 2 STIRRUPS @COL12 ,#5@8 H.E.F. CONT.
3B7	24	74	4-#11	2-#11	1	#5	@8	#5@8 H.E.F. CONT.
3B8	30	59	5-#11	6-#10	2	#4	@12	#4@10 HORIZ. E.F. CONT.
3B9	26	30	4-#9	4-#9	2	#4	@12	
3B10	24	70	4-#11	2-#11	1	#5	@8	#5@8 H.E.F. CONT.
3B12	20	36	4-#11	4-#11	2	#4	@8	#4@10 HORIZ. E.F. CONT.
3B13	12	59	2-#11	2-#10	1	#4	@12	#4@10 HORIZ. E.F. CONT.
3B14	24	100	4-#11	2-#11	1	#5	@8	#5@8 H.E.F. CONT.
3B15	36	16	6-#11	4-#9	2	#4	@6	
3B16	18	172						SEE 4/S-840 FOR REINFORCING
3B17	48	30	8-#11	8-#9	3	#5	@10	
3B18	12	24	3-#9	3-#8	1	#4	@8	
3B19	18	18	3-#9	2-#7	1	#4	@8	
3B20	16	24	3-#9	3-#8	1	#4	@8	1-#9B & 1-#7 T ADD'L IN 16" WIDE BM.
3B21	8.5/12	12	2-#7	2-#7	1	#4	@8	
3B22	6	10	1-#7	1-#7	1A	#4	@3 1/2	
3MB1	18	48	3-#9	3-#11	1	#4	@12	UPTURNED BM. #4@10 HORIZ. E.F. CONT.

STIRRUP TYPES

CONCRETE NOTES:

1. TOP OF SLAB ELEVATION SEE PLAN.
2. SLAB TO BE 12" THICK U.O.N. THUS ▭ ON PLAN.
3. BOTTOM REINFORCEMENT TO BE #5@12 CONT. E.W. FOR 12" SLAB, FOR ADDITIONAL REINFORCEMENT SEE PLAN.
4. FOR DETAILS OF THE INTEGRITY REINFORCEMENT SEE DRAWING S-965.
5. FOR BALANCE OF NOTES SEE DRAWING S-010.

3RD FLOOR OVERALL FRAMING PLAN

1 S-030

SCALE: 1/16" = 1'-0"

STEEL NOTES:

1. TOP OF SLAB AT STEEL CONSTRUCTION SHALL BE AS NOTED ON PLAN.
2. SLAB CONSTRUCTION SHALL BE 6" NORMAL WEIGHT CONCRETE ON TOP OF 3" 18GA. (Fy=50 KSI) COMPOSITE GALVANIZED METAL DECK (TOTAL SLAB DEPTH = 9") REINF. WITH #4@12 TOP E.W. + #4 @12 BOTTOM (FLUTE) AND 4 1/2" + 2" DECK SHALL BE 4 1/2" NORMAL WEIGTH CONC. ON 2" 18GA (Fy=50ksi) COMPOSITE GALVANIZED METAL DECK (TOTAL SLAB DEPTH = 6 1/2") REINF. WITH #5@12 TOP E.W. + #5@12 BOTTOM (FLUTE)
3. STUDS SHALL BE 3/4" Ø x 6" LONG. ALL STEEL BEAMS SHALL HAVE MIN 1 STUD/FT. U.O.N. THUS <..> ON PLAN.
4. P=... K INDICATES AXIAL FORCE,REVERSIBLE IN KIPS.
5. ALL BEAMS DIRECTLY CONNECTING TO COLUMNS/WALLS SHALL BE DESIGNED TO TRANSFER AN AXIAL FORCE (TENSION OR COMPRESSION) OF P = 150kips. AT EACH END U.O.N. ON PLAN IN ADDITION TO ALL OTHER LOADS.
6. FOR TRUSS ELEVATIONS SEE S-930 SERIES DRAWINGS.
7. FOR BALANCE OF NOTES SEE DRAWING S-010.

KEY PLAN:

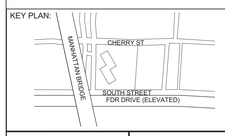

PROJECT NORTH

TRUE NORTH

DEVELOPER:
EXTELL DEVELOPMENT COMPANY
805 Third Ave, 7th Floor
New York, NY 10022
TEL: 212-712-6000 FAX: 212-712-6100

ARCHITECT OF RECORD:
AAI ARCHITECTS, P.C.
14 Wall Street, 2nd Floor
New York, NY 10005
TEL: 212-964-4040 FAX: 212-964-4090

INTERIOR DESIGNER:
MEYER DAVIS
180 Varick St, suite 404
New York, NY 10014
TEL: 212-627-5574

LANDSCAPE DESIGNER:
WEST 8 URBAN DESIGN & LANDSCAPE ARCHITECTURE P.C.
333 Hudson Street, Suite 905
New York, NY 10013
TEL: 212-285-0088 FAX: 212-285-0228

STRUCTURAL ENGINEERS:
WSP
228 East 45th Street
New York, NY 10017
TEL: 212-687-9888 FAX: 646-487-5501

MEP ENGINEERS:
ICOR ASSOCIATES, LLC
485 C Route 1 South, Suite 200
Iseline, NJ 08830
TEL: 908-272-3300 FAX: 908-272-4440

GEOTECHNICAL ENGINEERS:
LANGAN ENGINEERING & ENVIRONMENTAL SERVICES
21 Penn Plaza - 360 West 31st Street, 8th Floor
New York, NY 10001
TEL: 212.479.5400 FAX: 212.479.5444

No.	DESCRIPTION:	DATE:
1	50% SD	02-28-14
2	100%SD	04-25-14
3	50% DD	08-01-14
4	DESIGN DEVELOPMENT	10-07-14
5	STEEL BID PACKAGE	02-24-15
6	CONCRETE BID PACKAGE	03-06-15
7	ADDENDUM #3	03-27-15
8	50% CONSTRUCTION DOCUMENTS	04-08-15
9	ADDENDUM #4	04-24-15
10	ADDENDUM #10	07-20-15
11	ISSUED FOR FILING	07-28-15
12	80% CONSTRUCTION DOCUMENTS	08-14-15
13	ASI #13	08-26-15
14	ADDENDUM #11	09-25-15
15	90% CONSTRUCTION DOCUMENTS	01-15-16
16	ADDENDUM #16	02-04-16
17	ASI #56	02-19-16
18	ASI #57	02-26-16
19	ISSUED FOR FILING	03-07-16

Discrepancies must be reported immediately to the Architect before proceeding. Only figured dimensions are to be used. Contractors must check all dimensions on site. This drawing is protected by copyright.

ALL DIMENSIONS ARE SHOWN IN IMPERIAL.

CONSULTANT:
WSP

PROJECT:
252 SOUTH STREET
NEW YORK, NY

DRAWING TITLE:
3RD FLOOR OVERALL FRAMING PLAN

SEAL & SIGNATURE:
STATE OF NEW YORK · AHMAD RAMADAN · No. 065502 · LICENSED PROFESSIONAL ENGINEER

DATE: 02/28/14
PROJECT No: 1302510
DRAWN: CAD REV:
CHK: CL
SCALE:
DWG No: **S-030.02**
DOB PAGE No: of

DOB EMPLOYEE STAMP:
Damian Titus
Buildings
APPROVED
Under Directive 2 of 1975
AMENDED APPLICATION
Date: 04/11/2016
NYC Development Hub

DOB B-SCAN:

FILE NAME:
PLOT DATE:

DEPT OF BLDGS121805629 Job Number
E307105529 Scan Code

30" x 42" Arch E1 - SHEET SIZE

1 S-031 **3RD FLOOR FRAMING PLAN - PART 1**

SCALE: 3/16" = 1'-0"

NOTE
1. FOR NOTES SEE S-030.

2 S-031 **3RD FLOOR MEZZANINE FRAMING PLAN**

SCALE: 3/16" = 1'-0"

KEY PLAN:

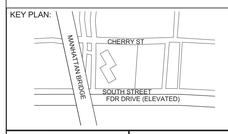

PROJECT NORTH

TRUE NORTH

DEVELOPER:
EXTELL DEVELOPMENT COMPANY
805 Third Ave, 7th Floor
New York, NY 10022
TEL: 212-712-6000 FAX: 212-712-6100

ARCHITECT OF RECORD:
AAI ARCHITECTS, P.C.
14 Wall Street, 2nd Floor
New York, NY 10005
TEL: 212-964-4040 FAX: 212-964-4090

INTERIOR DESIGNER:
MEYER DAVIS
180 Varick St, suite 404
New York, NY 10014
TEL: 212-627-5574

LANDSCAPE DESIGNER:
WEST 8 URBAN DESIGN & LANDSCAPE ARCHITECTURE P.C.
333 Hudson Street, Suite 905
New York, NY 10013
TEL: 212-285-0088 FAX: 212-285-0228

STRUCTURAL ENGINEERS:
WSP
228 East 45th Street
New York, NY 10017
TEL: 212-687-9888 FAX: 646-487-5501

MEP ENGINEERS:
ICOR ASSOCIATES, LLC
485 C Route 1 South, Suite 200
Iseline, NJ 08830
TEL: 908-272-3300 FAX: 908-272-4440

GEOTECHNICAL ENGINEERS:
LANGAN ENGINEERING & ENVIRONMENTAL SERVICES
21 Penn Plaza - 360 West 31st Street, 8th Floor
New York, NY 10001
TEL: 212.479.5400 FAX: 212.479.5444

No.	DESCRIPTION:	DATE:
1	DESIGN DEVELOPMENT	10-07-14
2	STEEL BID PACKAGE	02-24-15
3	CONCRETE BID PACKAGE	03-06-15
4	ADDENDUM #3	03-27-15
5	50% CONSTRUCTION DOCUMENTS	04-08-15
6	ADDENDUM #10	07-20-15
7	ISSUED FOR FILING	07-28-15
8	80% CONSTRUCTION DOCUMENTS	08-14-15
9	ASI #13	08-26-15
10	ADDENDUM #11	09-25-15
11	90% CONSTRUCTION DOCUMENTS	01-15-16
12	ADDENDUM #16	02-04-16
13	ASI #56	02-19-16
14	ASI #57	02-26-16
15	ASI #58	03-04-16
16	ISSUED FOR FILING	03-07-16

Discrepancies must be reported immediately to the Architect before proceeding. Only figured dimensions are to be used. Contractors must check all dimensions on site. This drawing is protected by copyright.

ALL DIMENSIONS ARE SHOWN IN IMPERIAL.

CONSULTANT:
WSP

PROJECT:
252 SOUTH STREET
NEW YORK, NY

DRAWING TITLE:
3RD FLOOR FRAMING PLAN - PART 1

SEAL & SIGNATURE:
STATE OF NEW YORK · AHMAD RAHIMIAN · No. 095572 · LICENSED PROFESSIONAL ENGINEER

DATE:	09/24/14
PROJECT No:	1302510
DRAWN: CAD	REV:
CHK: CL	
SCALE:	
DWG No:	**S-031.02**
DOB PAGE No:	of

DOB EMPLOYEE STAMP:
Damian Titus
Buildings
APPROVED
Under Directive 2 of 1975
AMENDED APPLICATION
Date: 04/11/2016
NYC Development Hub

DOB B-SCAN:

FILE NAME:
PLOT DATE:

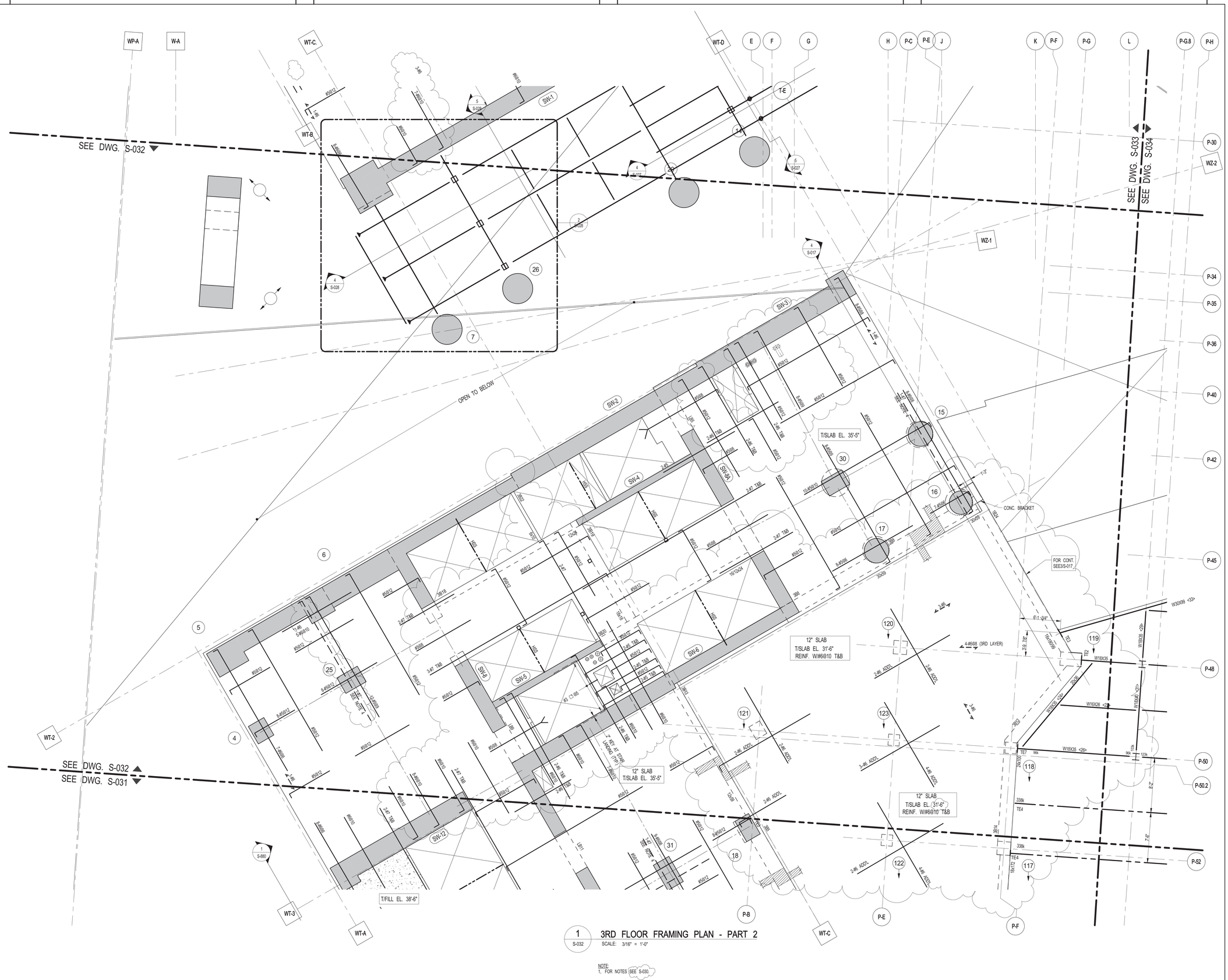

1 S-032 3RD FLOOR FRAMING PLAN - PART 2
SCALE: 3/16" = 1'-0"

NOTE:
1. FOR NOTES SEE S-030.

KEY PLAN:

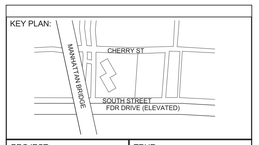

PROJECT NORTH | TRUE NORTH

DEVELOPER:
EXTELL DEVELOPMENT COMPANY
805 Third Ave, 7th Floor
New York, NY 10022
TEL: 212-712-6000 FAX: 212-712-6100

ARCHITECT OF RECORD:
AAI ARCHITECTS, P.C.
14 Wall Street, 2nd Floor
New York, NY 10005
TEL: 212-964-4040 FAX: 212-964-4090

INTERIOR DESIGNER:
MEYER DAVIS
180 Varick St, suite 404
New York, NY 10014
TEL: 212-627-5574

LANDSCAPE DESIGNER:
WEST 8 URBAN DESIGN & LANDSCAPE ARCHITECTURE P.C.
333 Hudson Street, Suite 905
New York, NY 10013
TEL: 212-285-0088 FAX: 212-285-0228

STRUCTURAL ENGINEERS:
WSP
228 East 45th Street
New York, NY 10017
TEL: 212-687-9888 FAX: 646-487-5501

MEP ENGINEERS:
ICOR ASSOCIATES, LLC
485 C Route 1 South, Suite 200
Iseline, NJ 08830
TEL: 908-272-3300 FAX: 908-272-4440

GEOTECHNICAL ENGINEERS:
LANGAN ENGINEERING & ENVIRONMENTAL SERVICES
21 Penn Plaza - 360 West 31st Street, 8th Floor
New York, NY 10001
TEL: 212.479.5400 FAX: 212.479.5444

No.	DESCRIPTION:	DATE:
1	DESIGN DEVELOPMENT	10-07-14
2	STEEL BID PACKAGE	02-24-15
3	CONCRETE BID PACKAGE	03-06-15
4	ADDENDUM #3	03-27-15
5	50% CONSTRUCTION DOCUMENTS	04-08-15
6	ADDENDUM #4	04-24-15
7	ADDENDUM #9	07-10-15
8	ISSUED FOR FILING	07-28-15
9	80% CONSTRUCTION DOCUMENTS	08-14-15
10	ASI #13	08-26-15
11	ADDENDUM #11	09-25-15
12	ADDENDUM #15	11-18-15
13	90% CONSTRUCTION DOCUMENTS	01-15-16
14	ADDENDUM #16	02-04-16
15	ASI #56	02-19-16
16	ASI #57	02-26-16
17	ISSUED FOR FILING	03-07-16

Discrepancies must be reported immediately to the Architect before proceeding. Only figured dimensions are to be used. Contractors must check all dimensions on site. This drawing is protected by copyright.

ALL DIMENSIONS ARE SHOWN IN IMPERIAL.

CONSULTANT:
WSP

PROJECT:
252 SOUTH STREET
NEW YORK, NY

DRAWING TITLE:
3RD FLOOR FRAMING PLAN - PART 2

SEAL & SIGNATURE:
STATE OF NEW YORK
AHMAD RAHIMIAN
No. 065537
LICENSED PROFESSIONAL ENGINEER

DATE:	09/24/14
PROJECT No:	1302510
DRAWN: CAD	REV:
CHK: CL	
SCALE:	
DWG No:	S-032.02
DOB PAGE No:	of

DOB EMPLOYEE STAMP:
Damian Titus
Buildings
APPROVED
Under Directive 2 of 1975
AMENDED APPLICATION
Date: 04/11/2016
NYC Development Hub

DOB B-SCAN:

FILE NAME:
PLOT DATE:

DEPT OF BLDGS 121105539 Job Number
E 566297.28 /0 Scan Code
30" x 42" Arch E1 - SHEET SIZE

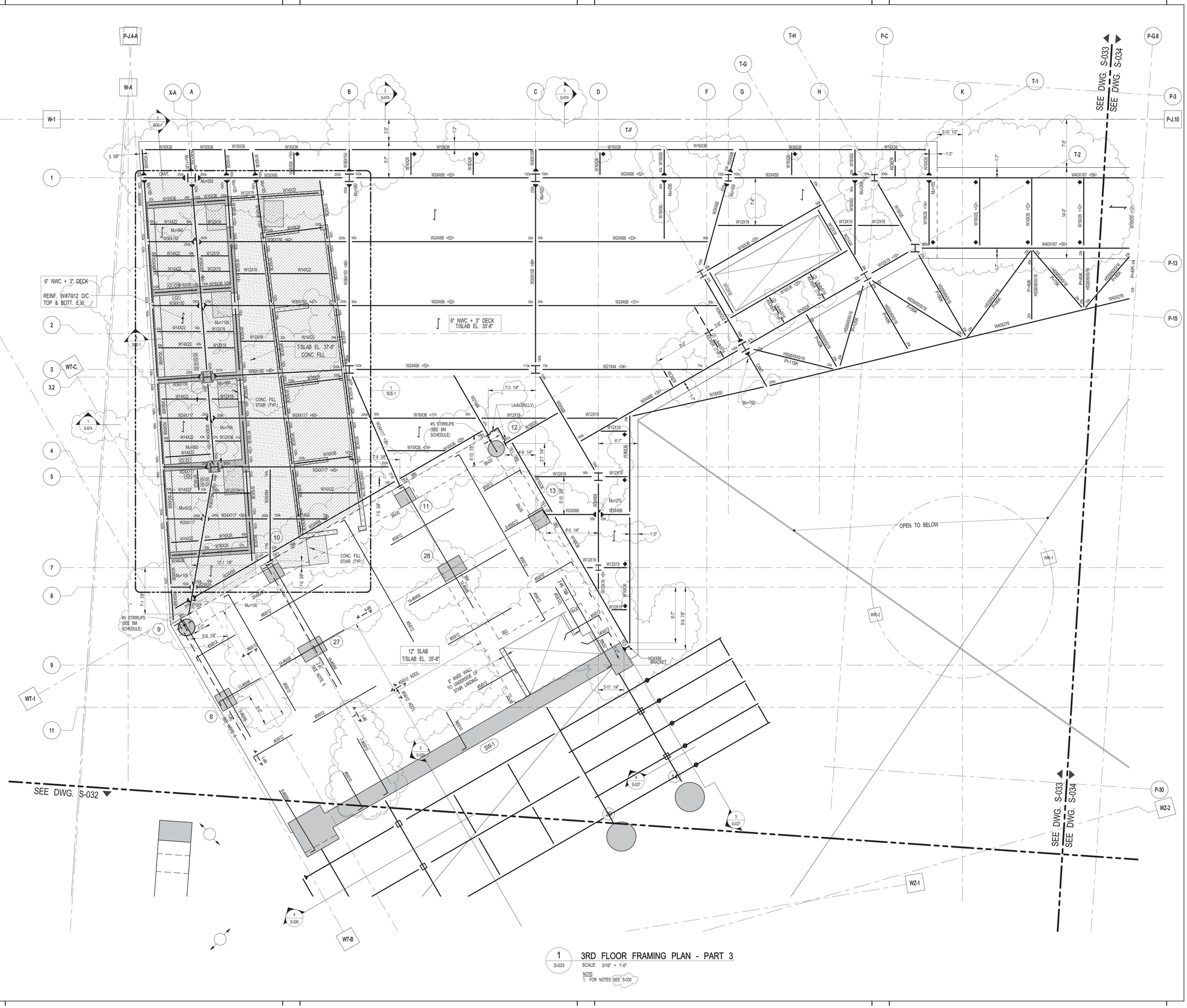

1 S-033 **3RD FLOOR FRAMING PLAN - PART 3**
SCALE: 3/16" = 1'-0"
NOTE:
1. FOR NOTES SEE S-030.

KEY PLAN:

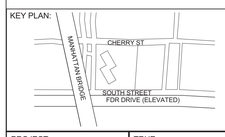

PROJECT NORTH | TRUE NORTH

DEVELOPER:
EXTELL DEVELOPMENT COMPANY
805 Third Ave, 7th Floor
New York, NY 10022
TEL: 212-712-6000 FAX: 212-712-6100

ARCHITECT OF RECORD:
AAI ARCHITECTS, P.C.
14 Wall Street, 2nd Floor
New York, NY 10005
TEL: 212-964-4040 FAX: 212-964-4090

INTERIOR DESIGNER:
MEYER DAVIS
180 Varick St, suite 404
New York, NY 10014
TEL: 212-627-5574

LANDSCAPE DESIGNER:
WEST 8 URBAN DESIGN & LANDSCAPE ARCHITECTURE P.C.
333 Hudson Street, Suite 905
New York, NY 10013
TEL: 212-285-0088 FAX: 212-285-0228

STRUCTURAL ENGINEERS:
WSP
228 East 45th Street
New York, NY 10017
TEL: 212-687-9888 FAX: 646-487-5501

MEP ENGINEERS:
ICOR ASSOCIATES, LLC
485 C Route 1 South, Suite 200
Iseline, NJ 08830
TEL: 908-272-3300 FAX: 908-272-4440

GEOTECHNICAL ENGINEERS:
LANGAN ENGINEERING & ENVIRONMENTAL SERVICES
21 Penn Plaza - 360 West 31st Street, 8th Floor
New York, NY 10001
TEL: 212.479.5400 FAX: 212.479.5444

No.	DESCRIPTION:	DATE:
1	DESIGN DEVELOPMENT	10-07-14
2	STEEL BID PACKAGE	02-24-15
3	CONCRETE BID PACKAGE	03-06-15
4	RFI 190 UPDATE	03-17-15
5	ADDENDUM #3	03-27-15
6	50% CONSTRUCTION DOCUMENTS	04-08-15
7	ADDENDUM #4	04-24-15
8	ADDENDUM #5	05-01-15
9	ADDENDUM #9	07-10-15
10	ADDENDUM #10	07-20-15
11	ISSUED FOR FILING	07-28-15
12	80% CONSTRUCTION DOCUMENTS	08-14-15
13	ASI #13	08-26-15
14	ADDENDUM #11	09-25-15
15	ADDENDUM #14	10-22-15
16	ADDENDUM #15	11-18-15
17	90% CONSTRUCTION DOCUMENTS	01-15-16
18	ADDENDUM #16	02-04-16
19	ASI #56	02-19-16
20	ASI #57	02-26-16
21	ASI #58	03-04-16
22	ISSUED FOR FILING	03-07-16

Discrepancies must be reported immediately to the Architect before proceeding. Only figured dimensions are to be used. Contractors must check all dimensions on site. This drawing is protected by copyright.

ALL DIMENSIONS ARE SHOWN IN IMPERIAL.

CONSULTANT: WSP

PROJECT:
252 SOUTH STREET
NEW YORK, NY

DRAWING TITLE:
3RD FLOOR FRAMING PLAN - PART 3

SEAL & SIGNATURE:
STATE OF NEW YORK · AHMAD RAHIMIAN · No. 065537 · LICENSED PROFESSIONAL ENGINEER

DATE:	09/24/14
PROJECT No:	1302510
DRAWN: CAD	REV:
CHK: CL	
SCALE:	
DWG No:	**S-033.02**
DOB PAGE No:	of

DOB EMPLOYEE STAMP:
Damian Titus
NYC Buildings
APPROVED
Under Directive 2 of 1975
AMENDED APPLICATION
Date: 04/11/2016
NYC Development Hub

DOB B-SCAN:

FILE NAME:
PLOT DATE:

DEPT OF BLDGS 121185539 Job Number
ES 7568738389 Scan Code

30" x 42" Arch E1 - SHEET SIZE

1 S-034 — 3RD FLOOR FRAMING PLAN - PART 4

SCALE: 3/16" = 1'-0"

NOTE:
1. FOR NOTES SEE S-030.

KEY PLAN:

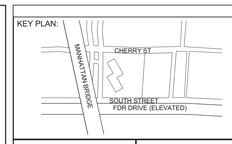

PROJECT NORTH

TRUE NORTH

DEVELOPER:
EXTELL DEVELOPMENT COMPANY
805 Third Ave, 7th Floor
New York, NY 10022
TEL: 212-712-6000 FAX: 212-712-6100

ARCHITECT OF RECORD:
AAI ARCHITECTS, P.C.
14 Wall Street, 2nd Floor
New York, NY 10005
TEL: 212-964-4040 FAX: 212-964-4090

INTERIOR DESIGNER:
MEYER DAVIS
180 Varick St, suite 404
New York, NY 10014
TEL: 212-627-5574

LANDSCAPE DESIGNER:
WEST 8 URBAN DESIGN & LANDSCAPE ARCHITECTURE P.C.
333 Hudson Street, Suite 905
New York, NY 10013
TEL: 212-285-0088 FAX: 212-285-0228

STRUCTURAL ENGINEERS:
WSP
228 East 45th Street
New York, NY 10017
TEL: 212-687-9888 FAX: 646-487-5501

MEP ENGINEERS:
ICOR ASSOCIATES, LLC
485 C Route 1 South, Suite 200
Iseline, NJ 08830
TEL: 908-272-3300 FAX: 908-272-4440

GEOTECHNICAL ENGINEERS:
LANGAN ENGINEERING & ENVIRONMENTAL SERVICES
21 Penn Plaza - 360 West 31st Street, 8th Floor
New York, NY 10001
TEL: 212.479.5400 FAX: 212.479.5444

No.	DESCRIPTION:	DATE:
1	DESIGN DEVELOPMENT	10-07-14
2	STEEL BID PACKAGE	02-24-15
3	ADDENDUM #3	03-27-15
4	50% CONSTRUCTION DOCUMENTS	04-08-15
5	ADDENDUM #4	04-24-15
6	ADDENDUM #5	05-01-15
7	ADDENDUM #10	07-20-15
8	ISSUED FOR FILING	07-28-15
9	80% CONSTRUCTION DOCUMENTS	08-14-15
10	ADDENDUM #11	09-25-15
11	ADDENDUM #14	10-22-15
12	90% CONSTRUCTION DOCUMENTS	01-15-16
13	ADDENDUM #16	02-04-16
14	ASI #57	02-26-16
15	ASI #58	03-04-16
16	ISSUED FOR FILING	03-07-16

Discrepancies must be reported immediately to the Architect before proceeding. Only figured dimensions are to be used. Contractors must check all dimensions on site. This drawing is protected by copyright.

ALL DIMENSIONS ARE SHOWN IN IMPERIAL.

CONSULTANT:
WSP

PROJECT:
252 SOUTH STREET
NEW YORK, NY

DRAWING TITLE:
3RD FLOOR FRAMING PLAN - PART 4

SEAL & SIGNATURE:
STATE OF NEW YORK · AHMAD RAHIMIAN · No. 085527 · LICENSED PROFESSIONAL ENGINEER

DATE:	09/24/14
PROJECT No:	1302510
DRAWN: CAD	REV:
CHK: CL	
SCALE:	

DWG No:
S-034.02

DOB PAGE No: of

DOB EMPLOYEE STAMP:
Damian Titus
Buildings
APPROVED
Under Directive 2 of 1975
AMENDED APPLICATION
Date: 04/11/2016
NYC Development Hub

DOB B-SCAN:

FILE NAME:
PLOT DATE:

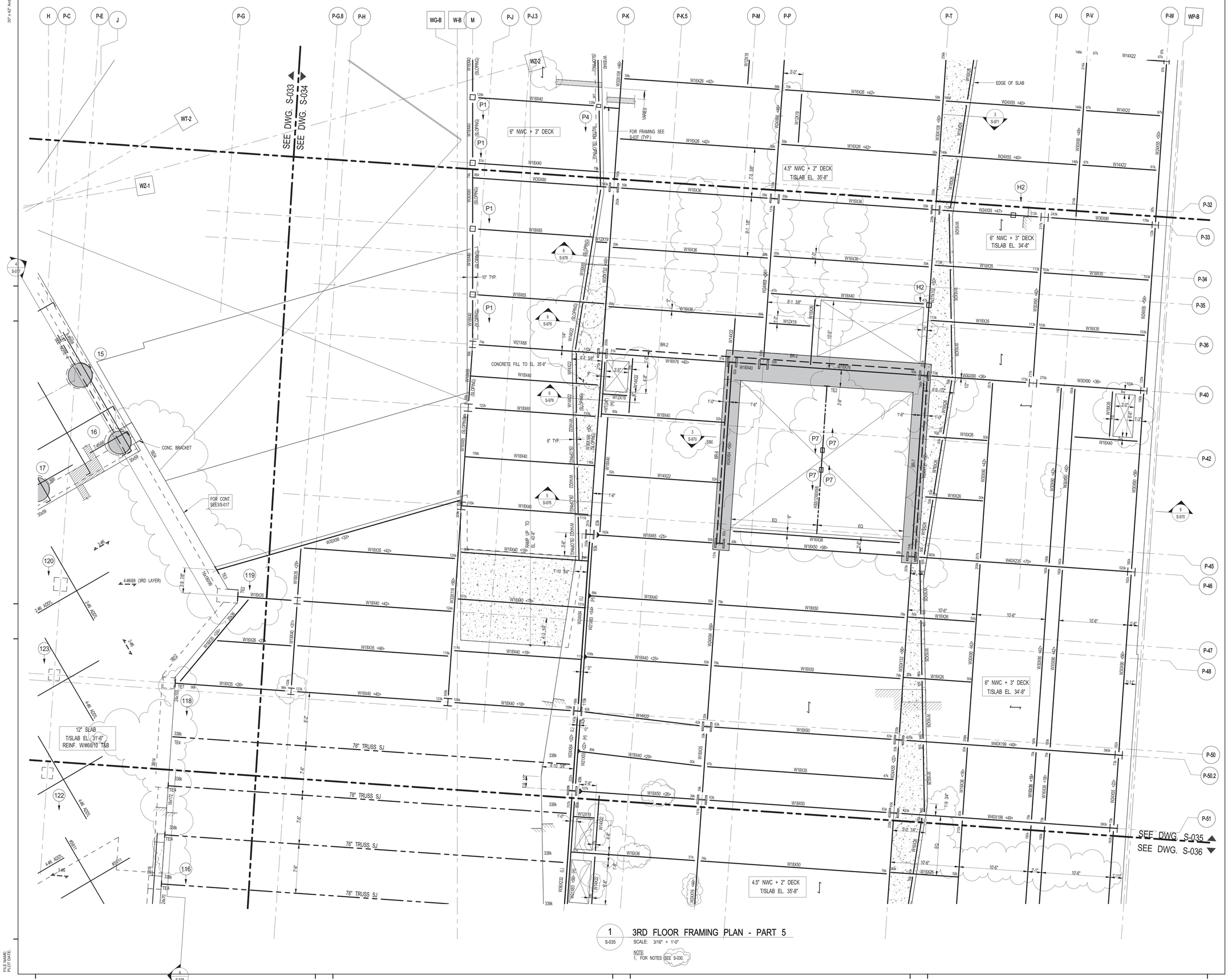

1 S-035 3RD FLOOR FRAMING PLAN - PART 5

SCALE: 3/16" = 1'-0"

NOTE:
1. FOR NOTES SEE S-030.

KEY PLAN:

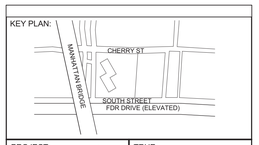

PROJECT NORTH

TRUE NORTH

DEVELOPER:
EXTELL DEVELOPMENT COMPANY
805 Third Ave, 7th Floor
New York, NY 10022
TEL: 212-712-6000 FAX: 212-712-6100

ARCHITECT OF RECORD:
AAI ARCHITECTS, P.C.
14 Wall Street, 2nd Floor
New York, NY 10005
TEL: 212-964-4040 FAX: 212-964-4090

INTERIOR DESIGNER:
MEYER DAVIS
180 Varick St, suite 404
New York, NY 10014
TEL: 212-627-5574

LANDSCAPE DESIGNER:
WEST 8 URBAN DESIGN & LANDSCAPE ARCHITECTURE P.C.
333 Hudson Street, Suite 905
New York, NY 10013
TEL: 212-285-0088 FAX: 212-285-0228

STRUCTURAL ENGINEERS:
WSP
228 East 45th Street
New York, NY 10017
TEL: 212-687-9888 FAX: 646-487-5501

MEP ENGINEERS:
ICOR ASSOCIATES, LLC
485 C Route 1 South, Suite 200
Iseline, NJ 08830
TEL: 908-272-3300 FAX: 908-272-4440

GEOTECHNICAL ENGINEERS:
LANGAN ENGINEERING & ENVIRONMENTAL SERVICES
21 Penn Plaza - 360 West 31st Street, 8th Floor
New York, NY 10001
TEL: 212.479.5400 FAX: 212.479.5444

No.	DESCRIPTION:	DATE:
1	DESIGN DEVELOPMENT	10-07-14
2	STEEL BID PACKAGE	02-24-15
3	ADDENDUM #3	03-27-15
4	50% CONSTRUCTION DOCUMENTS	04-08-15
5	ADDENDUM #4	04-24-15
6	ADDENDUM #5	05-01-15
7	ISSUED FOR FILING	07-28-15
8	80% CONSTRUCTION DOCUMENTS	08-14-15
9	ASI #13	08-26-15
10	ADDENDUM #11	09-25-15
11	90% CONSTRUCTION DOCUMENTS	01-15-16
12	ADDENDUM #16	02-04-16
13	ASI #58	03-04-16
14	ISSUED FOR FILING	03-07-16

Discrepancies must be reported immediately to the Architect before proceeding. Only figured dimensions are to be used. Contractors must check all dimensions on site. This drawing is protected by copyright.

ALL DIMENSIONS ARE SHOWN IN IMPERIAL.

CONSULTANT:
WSP

PROJECT:
252 SOUTH STREET
NEW YORK, NY

DRAWING TITLE:
3RD FLOOR FRAMING PLAN - PART 5

SEAL & SIGNATURE:
STATE OF NEW YORK
AHMAD RAHIMIAN
No. 065537
LICENSED PROFESSIONAL ENGINEER

DATE:	09/24/14
PROJECT No:	1302510
DRAWN: CAD	REV:
CHK: CL	
SCALE:	
DWG No:	S-035.02
DOB PAGE No:	of

DOB EMPLOYEE STAMP:
Damian Titus
Buildings
APPROVED
Under Directive 2 of 1975
AMENDED APPLICATION
Date: 04/11/2016
NYC Development Hub

DOB B-SCAN:

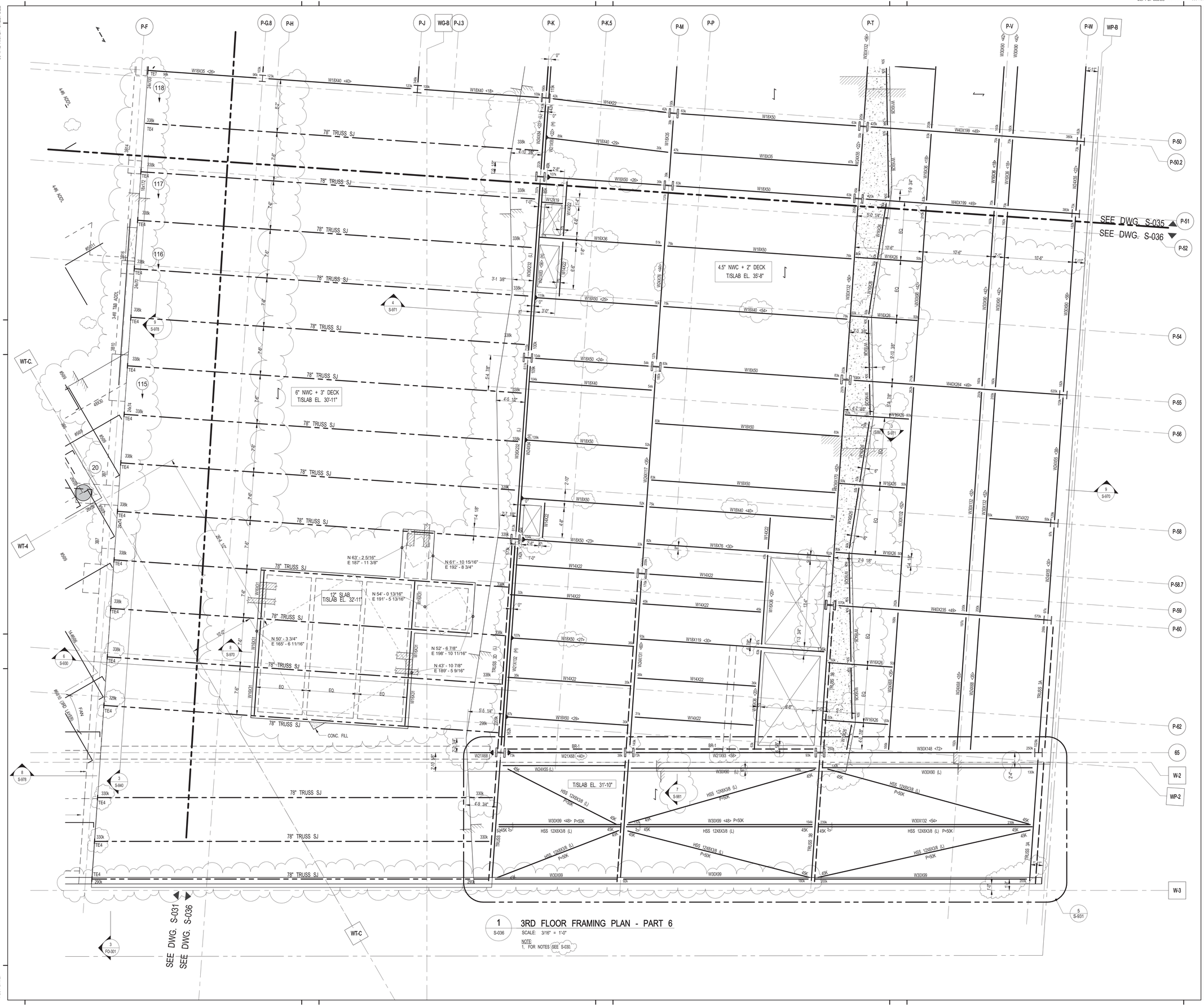

1 S-036 3RD FLOOR FRAMING PLAN - PART 6

SCALE: 3/16" = 1'-0"

NOTE:
1. FOR NOTES SEE S-030.

KEY PLAN:

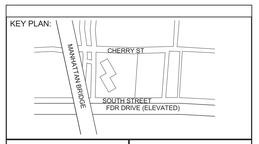

PROJECT NORTH

TRUE NORTH

DEVELOPER:
EXTELL DEVELOPMENT COMPANY
805 Third Ave, 7th Floor
New York, NY 10022
TEL: 212-712-6000 FAX: 212-712-6100

ARCHITECT OF RECORD:
AAI ARCHITECTS, P.C.
14 Wall Street, 2nd Floor
New York, NY 10005
TEL: 212-964-4040 FAX: 212-964-4090

INTERIOR DESIGNER:
MEYER DAVIS
180 Varick St, suite 404
New York, NY 10014
TEL: 212-627-5574

LANDSCAPE DESIGNER:
WEST 8 URBAN DESIGN & LANDSCAPE ARCHITECTURE P.C.
333 Hudson Street, Suite 905
New York, NY 10013
TEL: 212-285-0088 FAX: 212-285-0228

STRUCTURAL ENGINEERS:
WSP
228 East 45th Street
New York, NY 10017
TEL: 212-687-9888 FAX: 646-487-5501

MEP ENGINEERS:
ICOR ASSOCIATES, LLC
485 C Route 1 South, Suite 200
Iseline, NJ 08830
TEL: 908-272-3300 FAX: 908-272-4440

GEOTECHNICAL ENGINEERS:
LANGAN ENGINEERING & ENVIRONMENTAL SERVICES
21 Penn Plaza - 360 West 31st Street, 8th Floor
New York, NY 10001
TEL: 212.479.5400 FAX: 212.479.5444

No.	DESCRIPTION:	DATE:
1	DESIGN DEVELOPMENT	10-07-14
2	STEEL BID PACKAGE	02-24-15
3	ADDENDUM #3	03-27-15
4	50% CONSTRUCTION DOCUMENTS	04-08-15
5	ADDENDUM #4	04-24-15
6	ADDENDUM #5	05-01-15
7	ISSUED FOR FILING	07-28-15
8	80% CONSTRUCTION DOCUMENTS	08-14-15
9	ASI #13	08-26-15
10	90% CONSTRUCTION DOCUMENTS	01-15-16
11	ADDENDUM #16	02-04-16
12	ASI #58	03-04-16
13	ISSUED FOR FILING	03-07-16

Discrepancies must be reported immediately to the Architect before proceeding. Only figured dimensions are to be used. Contractors must check all dimensions on site. This drawing is protected by copyright.

ALL DIMENSIONS ARE SHOWN IN IMPERIAL.

CONSULTANT:
WSP

PROJECT:
252 SOUTH STREET
NEW YORK, NY

DRAWING TITLE:
3RD FLOOR FRAMING PLAN - PART 6

SEAL & SIGNATURE:
STATE OF NEW YORK
AHMAD RAHIMIAN
No. 065537
LICENSED PROFESSIONAL ENGINEER

DATE:	09/24/14
PROJECT No:	1302510
DRAWN: CAD	REV:
CHK: CL	
SCALE:	
DWG No:	S-036.02
DOB PAGE No:	of

DOB EMPLOYEE STAMP:
Damian Titus
Buildings
APPROVED
Under Directive 2 of 1975
AMENDED APPLICATION
Date: 04/11/2016
NYC Development Hub

DOB B-SCAN:

30" x 42" Arch E1 - SHEET SIZE

DEPT OF BLDGS121805639 Job Number
E3507834279 Scan Code

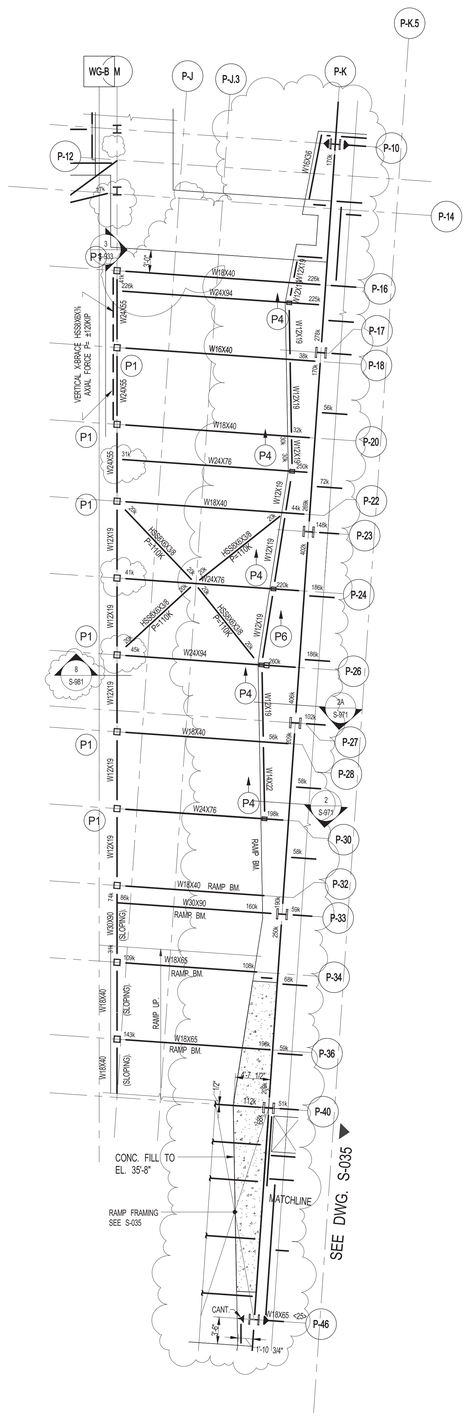

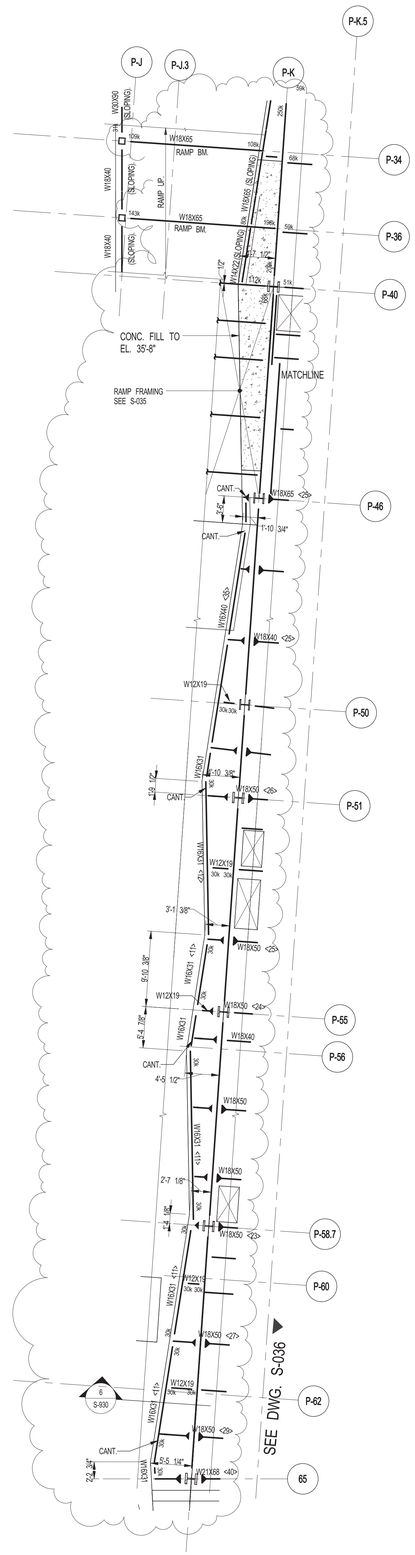

1 S-037 PART FRAMING PLAN AT ELEVATION 35'-8"

SCALE: 1/8" = 1'-0"

NOTE:
1. FOR NOTES SEE S-030.

KEY PLAN:

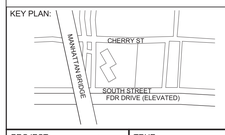

PROJECT NORTH

TRUE NORTH

DEVELOPER:
EXTELL DEVELOPMENT COMPANY
805 Third Ave, 7th Floor
New York, NY 10022
TEL: 212-712-6000 FAX: 212-712-6100

ARCHITECT OF RECORD:
AAI ARCHITECTS, P.C.
14 Wall Street, 2nd Floor
New York, NY 10005
TEL: 212-964-4040 FAX: 212-964-4090

INTERIOR DESIGNER:
MEYER DAVIS
180 Varick St, suite 404
New York, NY 10014
TEL: 212-627-5574

LANDSCAPE DESIGNER:
WEST 8 URBAN DESIGN & LANDSCAPE ARCHITECTURE P.C.
333 Hudson Street, Suite 905
New York, NY 10013
TEL: 212-285-0088 FAX: 212-285-0228

STRUCTURAL ENGINEERS:
WSP
228 East 45th Street
New York, NY 10017
TEL: 212-687-9888 FAX: 646-487-5501

MEP ENGINEERS:
ICOR ASSOCIATES, LLC
485 C Route 1 South, Suite 200
Iseline, NJ 08830
TEL: 908-272-3300 FAX: 908-272-4440

GEOTECHNICAL ENGINEERS:
LANGAN ENGINEERING & ENVIRONMENTAL SERVICES
21 Penn Plaza - 360 West 31st Street, 8th Floor
New York, NY 10001
TEL: 212.479.5400 FAX: 212.479.5444

No.	DESCRIPTION:	DATE:
1	STEEL BID PACKAGE	02-24-15
2	ADDENDUM #3	03-27-15
3	50% CONSTRUCTION DOCUMENTS	04-08-15
4	ADDENDUM #4	04-24-15
5	ISSUED FOR FILING	07-28-15
6	80% CONSTRUCTION DOCUMENTS	08-14-15
7	ASI #13	08-26-15
8	90% CONSTRUCTION DOCUMENTS	01-15-16
9	ASI #58	03-04-16
10	ISSUED FOR FILING	03-07-16

Discrepancies must be reported immediately to the Architect before proceeding. Only figured dimensions are to be used. Contractors must check all dimensions on site. This drawing is protected by copyright.

ALL DIMENSIONS ARE SHOWN IN IMPERIAL.

CONSULTANT:
WSP

PROJECT:
252 SOUTH STREET
NEW YORK, NY

DRAWING TITLE:
3RD FLOOR RAMP PART FRAMING PLAN

SEAL & SIGNATURE:
STATE OF NEW YORK · AHMAD RAHIMIAN · No. 065652 · LICENSED PROFESSIONAL ENGINEER

DATE: 02/24/15
PROJECT No: 1302510
DRAWN: CAD REV:
CHK: CL
SCALE: As indicated
DWG No: **S-037.02**
DOB PAGE No: of

DOB EMPLOYEE STAMP:
Damian Titus
Buildings
APPROVED
Under Directive 2 of 1975
AMENDED APPLICATION
Date: 04/11/2016
NYC Development Hub

DOB B-SCAN:

FILE NAME:
PLOT DATE:

DEPT OF BLDGS121805628 Job Number
E50799410SB Scan Code
30" x 42" Arch E1 - SHEET SIZE

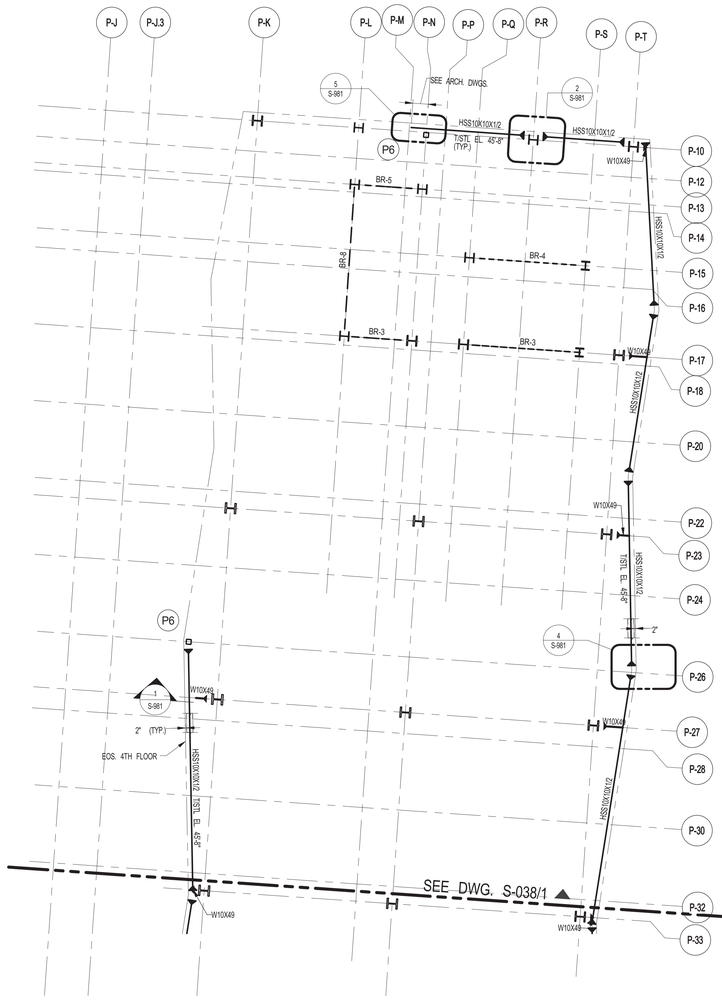

1 S-038 — 3RD -INTERMEDIATE STEEL FRAMING PLAN - PART 1
SCALE: 1/8" = 1'-0"

NOTE:
1. FOR NOTES SEE S-030.

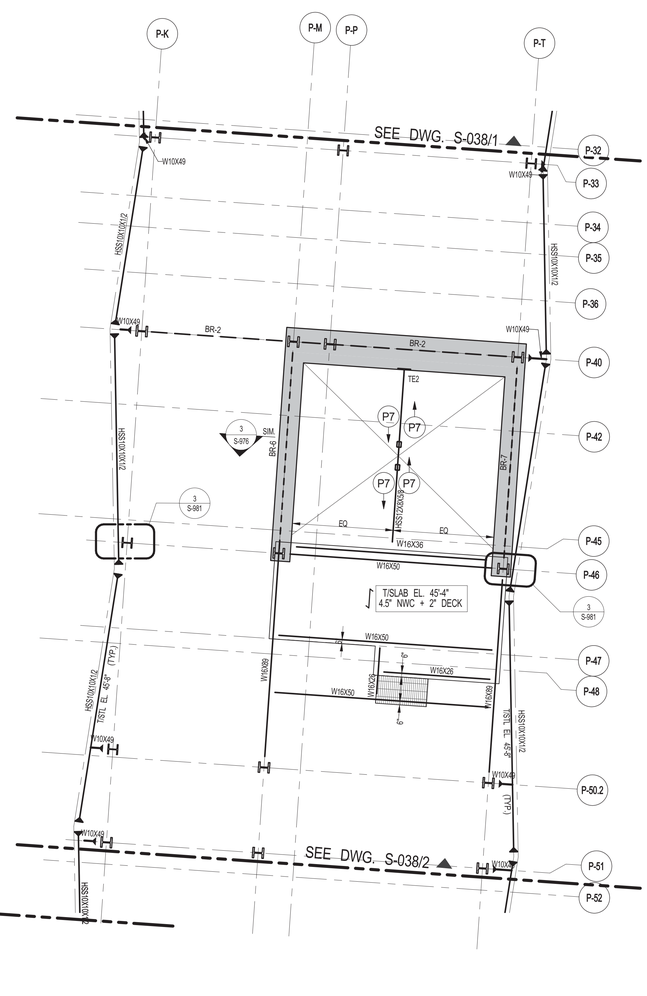

2 S-038 — 3RD -INTERMEDIATE STEEL FRAMING PLAN - PART 2
SCALE: 1/8" = 1'-0"

3 S-038 — 3RD -INTERMEDIATE STEEL FRAMING PLAN - PART 3
SCALE: 1/8" = 1'-0"

KEY PLAN:

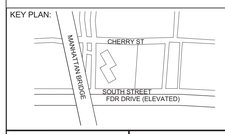

PROJECT NORTH | TRUE NORTH

DEVELOPER:
EXTELL DEVELOPMENT COMPANY
805 Third Ave, 7th Floor
New York, NY 10022
TEL: 212-715-2-6000 FAX: 212-712-6100

ARCHITECT OF RECORD:
AAI ARCHITECTS, P.C.
14 Wall Street, 2nd Floor
New York, NY 10005
TEL: 212-964-4040 FAX: 212-964-4090

INTERIOR DESIGNER:
MEYER DAVIS
180 Varick St, suite 404
New York, NY 10014
TEL: 212-627-5574

LANDSCAPE DESIGNER:
WEST 8 URBAN DESIGN & LANDSCAPE ARCHITECTURE P.C.
333 Hudson Street, Suite 905
New York, NY 10013
TEL: 212-285-0088 FAX: 212-285-0228

STRUCTURAL ENGINEERS:
WSP
228 East 45th Street
New York, NY 10017
TEL: 212-687-9888 FAX: 646-487-5501

MEP ENGINEERS:
ICOR ASSOCIATES, LLC
485 C Route 1 South, Suite 200
Iseline, NJ 08830
TEL: 908-272-3300 FAX: 908-272-4440

GEOTECHNICAL ENGINEERS:
LANGAN ENGINEERING & ENVIRONMENTAL SERVICES
21 Penn Plaza - 360 West 31st Street, 8th Floor
New York, NY 10001
TEL: 212.479.5400 FAX: 212.479.5444

No.	DESCRIPTION:	DATE:
1	STEEL BID PACKAGE	02-24-15
2	ADDENDUM #3	03-27-15
3	80% CONSTRUCTION DOCUMENTS	08-14-15
4	ASI #57	02-26-16
5	ASI #58	03-04-16
6	ISSUED FOR FILING	03-07-16

Discrepancies must be reported immediately to the Architect before proceeding. Only figured dimensions are to be used. Contractors must check all dimensions on site. This drawing is protected by copyright.

ALL DIMENSIONS ARE SHOWN IN IMPERIAL.

CONSULTANT:
WSP

PROJECT:
252 SOUTH STREET
NEW YORK, NY

DRAWING TITLE:
PART FRAMING PLAN AT EL.= 45'-4"

SEAL & SIGNATURE:
STATE OF NEW YORK — AHMAD RAZZAQUNI — No. 085027 — LICENSED PROFESSIONAL ENGINEER

DATE:	02/25/15
PROJECT No:	1302510
DRAWN: CAD	REV:
CHK: CL	
SCALE: As indicated	
DWG No:	**S-038.00**
DOB PAGE No:	of

DOB EMPLOYEE STAMP:
Damian Titus
Buildings
APPROVED
Under Directive 2 of 1975
AMENDED APPLICATION
Date: 04/11/2016
NYC Development Hub

DOB B-SCAN:

FILE NAME:
PLOT DATE:

DEPT OF BLDGS121105033 Job Number
ES0025294637 Scan Code

30" x 42" Arch E1 - SHEET SIZE

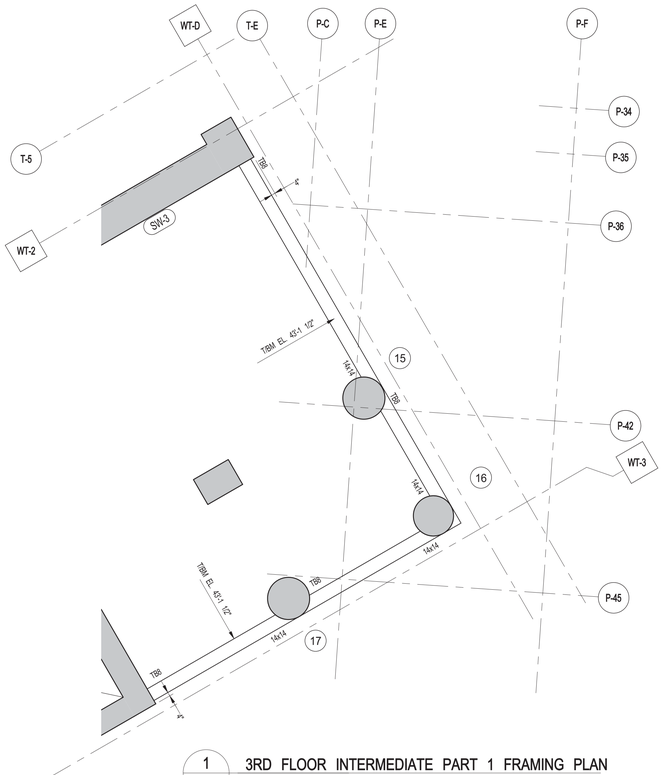

1 S-039 **3RD FLOOR INTERMEDIATE PART 1 FRAMING PLAN**
SCALE: 3/16" = 1'-0"

NOTE:
1. FOR BALANCE OF NOTES SEE DRAWING S-010.

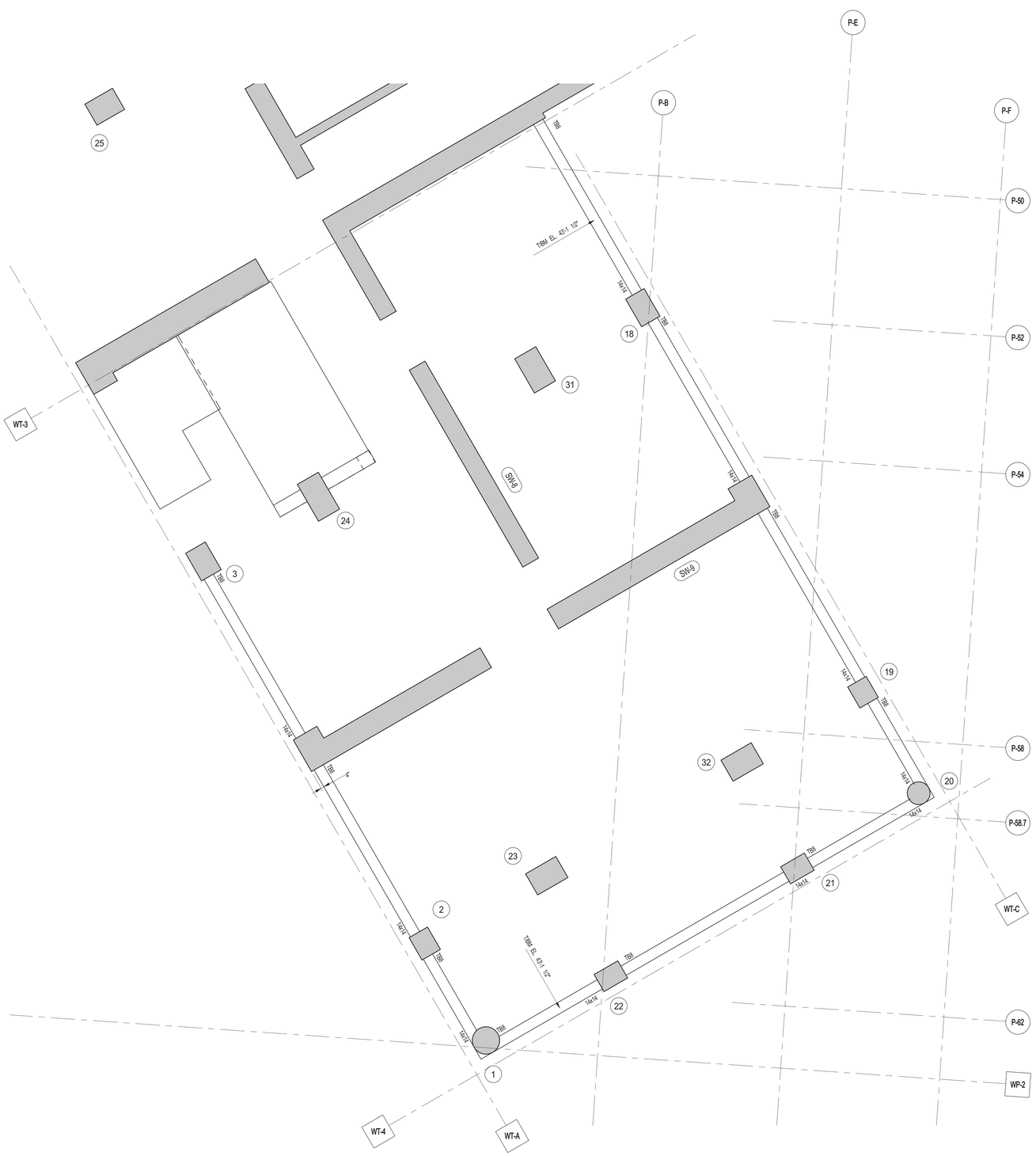

2 S-039 **3RD FLOOR INTERMEDIATE PART 2 FRAMING PLAN**
SCALE: 3/16" = 1'-0"

NOTE:
1. FOR BALANCE OF NOTES SEE DRAWING S-010.

KEY PLAN:

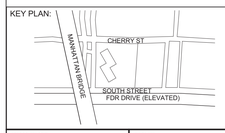

PROJECT NORTH

TRUE NORTH

DEVELOPER:
EXTELL DEVELOPMENT COMPANY
805 Third Ave, 7th Floor
New York, NY 10022
TEL: 212-712-6000 FAX: 212-712-6100

ARCHITECT OF RECORD:
AAI ARCHITECTS, P.C.
14 Wall Street, 2nd Floor
New York, NY 10005
TEL: 212-964-4040 FAX: 212-964-4090

INTERIOR DESIGNER:
MEYER DAVIS
180 Varick St, suite 404
New York, NY 10014
TEL: 212-627-5574

LANDSCAPE DESIGNER:
WEST 8 URBAN DESIGN & LANDSCAPE ARCHITECTURE P.C.
333 Hudson Street, Suite 905
New York, NY 10013
TEL: 212-285-0088 FAX: 212-285-0228

STRUCTURAL ENGINEERS:
WSP
228 East 45th Street
New York, NY 10017
TEL: 212-687-9888 FAX: 646-487-5501

MEP ENGINEERS:
ICOR ASSOCIATES, LLC
485 C Route 1 South, Suite 200
Iseline, NJ 08830
TEL: 908-272-3300 FAX: 908-272-4440

GEOTECHNICAL ENGINEERS:
LANGAN ENGINEERING & ENVIRONMENTAL SERVICES
21 Penn Plaza - 360 West 31st Street, 8th Floor
New York, NY 10001
TEL: 212.479.5400 FAX: 212.479.5444

No.	DESCRIPTION:	DATE:
1	90% CONSTRUCTION DOCUMENTS	01-15-16
2	ISSUED FOR FILING	03-07-16

Discrepancies must be reported immediately to the Architect before proceeding. Only figured dimensions are to be used. Contractors must check all dimensions on site. This drawing is protected by copyright.

ALL DIMENSIONS ARE SHOWN IN IMPERIAL.

CONSULTANT:
WSP

PROJECT:
252 SOUTH STREET
NEW YORK, NY

DRAWING TITLE:
3RD INTERMEDIATE FRAMING PART PLANS

SEAL & SIGNATURE:
STATE OF NEW YORK · AKRAM RAMADAN · No. 085552 · LICENSED PROFESSIONAL ENGINEER

DATE: 12/10/15
PROJECT No: 1302510
DRAWN: CAD
CHK: CL
REV:
SCALE: 3/16" = 1'-0"
DWG No: **S-039.00**
DOB PAGE No: of

DOB EMPLOYEE STAMP:
Damian Titus
Buildings
APPROVED
Under Directive 2 of 1975
AMENDED APPLICATION
Date: 04/11/2016
NYC Development Hub

DOB B-SCAN:

FILE NAME:
PLOT DATE:

DEPT OF BLDGS121185539 Job Number
E1548219T697 Scan Code

30" x 42" Arch E1 - SHEET SIZE

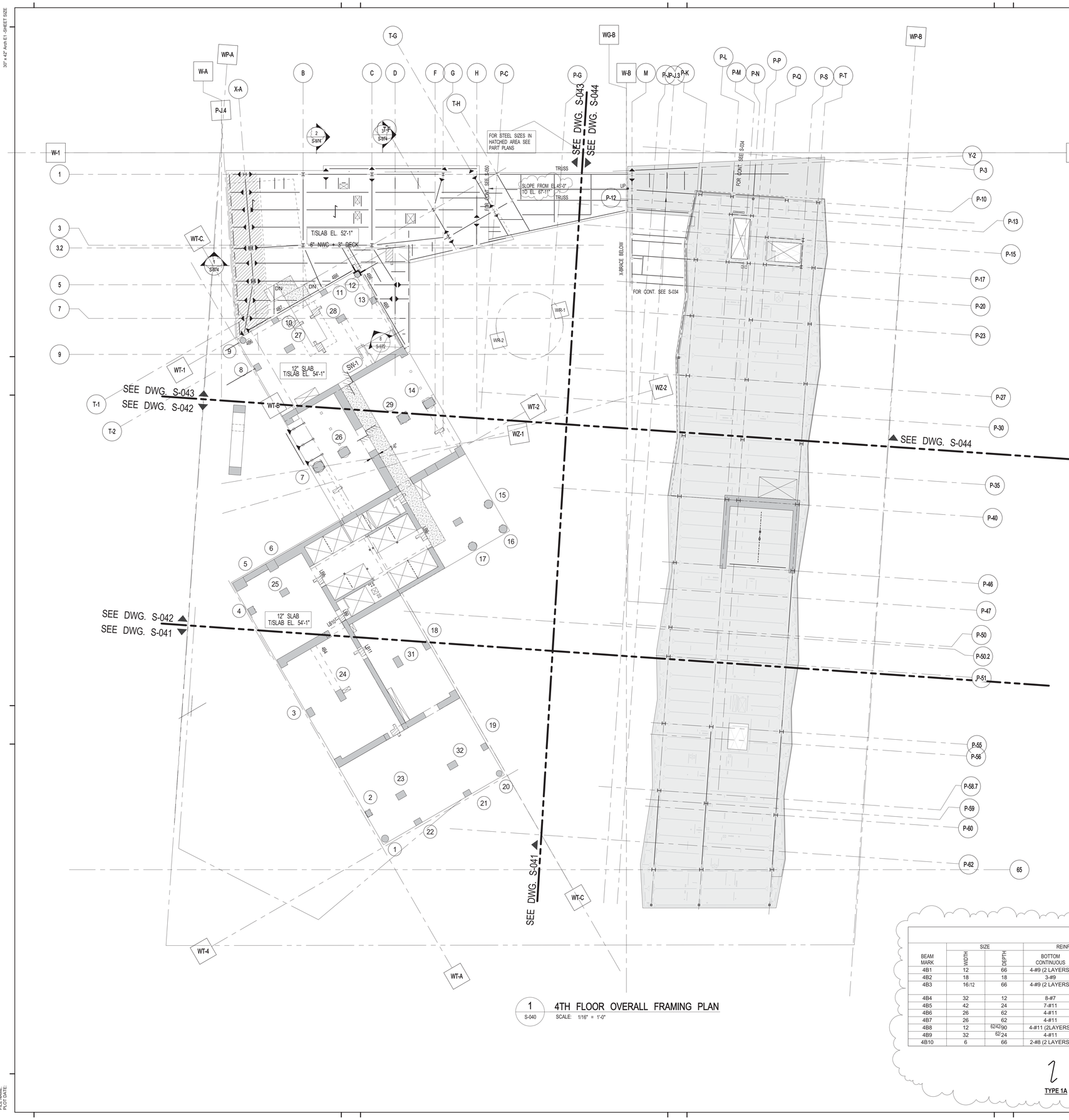

1 S-040 4TH FLOOR OVERALL FRAMING PLAN
SCALE: 1/16" = 1'-0"

STEEL NOTES

1. TOP OF SLAB AT STEEL CONSTRUCTION SHALL BE 57'-10" U.O.N. ON PLAN.
2. SLAB CONSTRUCTION SHALL BE 15" NORMAL WEIGHT CONCRETE ON TOP OF 3" COMPOSITE METAL DECK (TOTAL SLAB DEPTH - 18") U.O.N. ON PLAN.
3. STUDS SHALL BE: 3/4" Ø x 8" LONG. FOR 18" COMPOSITE SLAB.
   3/4" Ø x 5" LONG. FOR 9" COMPOSITE SLAB.
   REINF TO BE: #6@12 O.C. T&B E.W. FOR 18" COMPOSITE SLAB
   #5@12 TOP E.W. + #4@12 BOTTOM (FLUTE) FOR 9" COMPOSITE SLAB.
4. ALL BEAMS DIRECTLY CONNECTING TO COLUMNS SHALL BE DESIGNED TO TRANSFER AN AXIAL 'FORCE' (TENSION OR COMPRESSION) OF P = 150kips- BEAMS AT GRID LINE P-K & P-T P = 300kips- AT EACH END U.O.N.- ON PLAN IN ADDITION TO ALL OTHER LOADS.
5. X'-Y" INDICATES ARCHITECT TO VERIFY PRIOR TO CONSTRUCTION.
6. FOR BALANCE OF NOTES SEE DRAWING S-010.

CONCRETE NOTES:

1. TOP OF SLAB ELEVATION SEE PLAN
2. SLAB TO BE 12" THICK U.O.N. THUS ____ ON PLAN.
3. BOTTOM REINFORCEMENT TO BE #5@12 CONT. E.W. FOR 12" SLAB, FOR ADDITIONAL REINFORCEMENT SEE PLAN
4. FOR DETAILS OF THE INTEGRITY REINFORCEMENT SEE DRAWING S-865.
5. FOR BALANCE OF NOTES SEE DRAWING S-010.

4TH FLOOR BEAM SCHEDULE

BEAM MARK	SIZE WIDTH	SIZE DEPTH	REINFORCEMENT BOTTOM CONTINUOUS	REINFORCEMENT TOP CONTINUOUS	STIRRUPS TYPE	STIRRUPS SIZE	STIRRUPS SPACING	REMARKS
4B1	12	66	4-#9 (2 LAYERS)	4-#9 (2 LAYERS)	1	#4	@12	#4@10 HORIZ. E.F. CONT.
4B2	18	18	3-#9	2-#7	1	#4	@8	
4B3	16/12	66	4-#9 (2 LAYERS)	4-#9 (2 LAYERS)	1	#4	@12	#4@10 HORIZ. E.F. CONT. 1-#9 B & 1-#7 T ADD'L IN 16" WIDE BEAM
4B4	32	12	8-#7	8-#7	2	#4	@5	EXTEND TOP BARS INTO SLAB
4B5	42	24	7-#11	7-#11	2	#5	@8	1-#8 HORIZ EACH FACE CONT.
4B6	26	62	4-#11	4-#11	2	#4	@12	#5@8 HORIZ EA. FACE CONT.
4B7	26	62	4-#11	4-#11	2	#4	@12	#5@8 HORIZ EA. FACE CONT
4B8	12	62/42/90	4-#11 (2LAYERS)	2-#11	1	#5	@12	#5@8 HORIZ EA. FACE CONT.
4B9	32	62/24	4-#11	4-#8	2	#4	@10	
4B10	6	66	2-#8 (2 LAYERS)	2-#8 (2 LAYERS)	1A	#4	@8	#4@8 HORIZ. CONT

TYPE 1A TYPE 1 TYPE 2
STIRRUP TYPES

KEY PLAN:
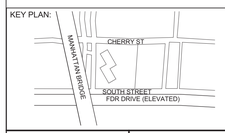

PROJECT NORTH
TRUE NORTH

DEVELOPER:
EXTELL DEVELOPMENT COMPANY
805 Third Ave, 7th Floor
New York, NY 10022
TEL: 212-712-6000 FAX: 212-712-6100

ARCHITECT OF RECORD:
AAI ARCHITECTS, P.C.
14 Wall Street, 2nd Floor
New York, NY 10005
TEL: 212-964-4040 FAX: 212-964-4090

INTERIOR DESIGNER:
MEYER DAVIS
180 Varick St, suite 404
New York, NY 10014
TEL: 212-627-5574

LANDSCAPE DESIGNER:
WEST 8 URBAN DESIGN & LANDSCAPE ARCHITECTURE P.C.
333 Hudson Street, Suite 905
New York, NY 10013
TEL: 212-285-0088 FAX: 212-285-0228

STRUCTURAL ENGINEERS:
WSP
228 East 45th Street
New York, NY 10017
TEL: 212-687-9888 FAX: 646-487-5501

MEP ENGINEERS:
ICOR ASSOCIATES, LLC
485 C Route 1 South, Suite 200
Iseline, NJ 08830
TEL: 908-272-3300 FAX: 908-272-4440

GEOTECHNICAL ENGINEERS:
LANGAN ENGINEERING & ENVIRONMENTAL SERVICES
21 Penn Plaza - 360 West 31st Street, 8th Floor
New York, NY 10001
TEL: 212.479.5400 FAX: 212.479.5444

No.	DESCRIPTION:	DATE:
1	50% SD	02-28-14
2	100%SD	04-25-14
3	50% DD	08-01-14
4	DESIGN DEVELOPMENT	10-07-14
5	STEEL BID PACKAGE	02-24-15
6	CONCRETE BID PACKAGE	03-06-15
7	ADDENDUM #3	03-27-15
8	50% CONSTRUCTION DOCUMENTS	04-08-15
9	ADDENDUM #4	04-24-15
10	ADDENDUM #5	05-01-15
11	ADDENDUM #10	07-20-15
12	ISSUED FOR FILING	07-28-15
13	80% CONSTRUCTION DOCUMENTS	08-14-15
14	ADDENDUM #16	02-04-16
15	ASI #58	03-04-16
16	ISSUED FOR FILING	03-07-16

Discrepancies must be reported immediately to the Architect before proceeding. Only figured dimensions are to be used. Contractors must check all dimensions on site. This drawing is protected by copyright.

ALL DIMENSIONS ARE SHOWN IN IMPERIAL.

CONSULTANT: WSP

PROJECT:
252 SOUTH STREET
NEW YORK, NY

DRAWING TITLE:
4TH FLOOR OVERALL FRAMING PLAN

SEAL & SIGNATURE:
STATE OF NEW YORK · AHMAD RAMHOUN · No. 085037 · LICENSED PROFESSIONAL ENGINEER

DATE: 02/24/14
PROJECT No: 1302510
DRAWN: CAD REV:
CHK: CL
SCALE:
DWG No: **S-040.02**
DOB PAGE No: of

DOB EMPLOYEE STAMP:
Damian Titus
Buildings
APPROVED
Under Directive 2 of 1975
AMENDED APPLICATION
Date: 04/11/2016
NYC Development Hub

DOB B-SCAN:

FILE NAME:
PLOT DATE:

DEPT OF BLDGS 121805639 Job Number
E302747395B Scan Code

30" x 42" Arch E1 - SHEET SIZE

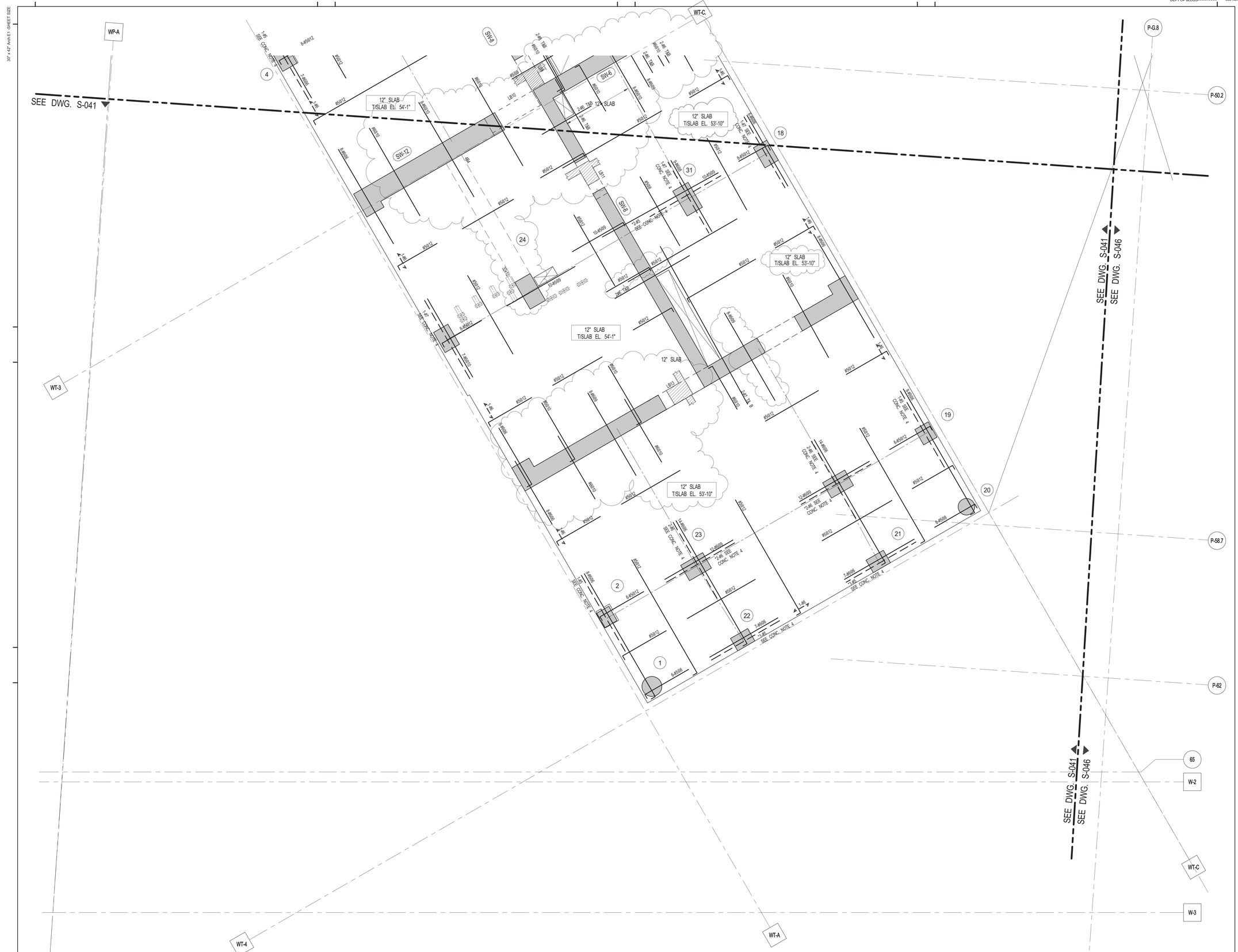
WP-A
WT-3
WT-4
WT-A
WT-C
W-2
W-3
65
P-G.8
P-50.2
P-58.7
P-62
SEE DWG. S-041
SEE DWG. S-046
SW-4
SW-5
SW-6
SW-12
WT-C.
12" SLAB T/SLAB EL. 54'-1"
12" SLAB T/SLAB EL. 53'-10"
12" SLAB
LB10
LB11
LB12
LB13
1-#5 SEE CONC. NOTE 4
1-#6 SEE CONC. NOTE 4
1-#5
1-#6
#5@12
#6@10
#5@13
1-#6 TAB
2-#6 TAB
1-#6 TAB
1-#6 TAB B
2-#6 TAB B
1-#6 TAB B
1-#6 TAB C
2-#6 TAB C
1-#6 TAB C
1-#6 TAB D
2-#6 TAB D
1-#6 TAB D
1-#6 TAB E
2-#6 TAB E
1-#6 TAB E
1-#6 TAB F
2-#6 TAB F
1-#6 TAB F
1-#6 TAB G
2-#6 TAB G
1-#6 TAB G
1-#6 TAB H
2-#6 TAB H
1-#6 TAB H
1-#6 TAB I
2-#6 TAB I
1-#6 TAB I
1-#6 TAB J
2-#6 TAB J
1-#6 TAB J
1-#6 TAB K
2-#6 TAB K
1-#6 TAB K
1-#6 TAB L
2-#6 TAB L
1-#6 TAB L
1-#6 TAB M
2-#6 TAB M
1-#6 TAB M
1-#6 TAB N
2-#6 TAB N
1-#6 TAB N
1-#6 TAB O
2-#6 TAB O
1-#6 TAB O
1-#6 TAB P
2-#6 TAB P
1-#6 TAB P
1-#6 TAB Q
2-#6 TAB Q
1-#6 TAB Q
1-#6 TAB R
2-#6 TAB R
1-#6 TAB R
1-#6 TAB S
2-#6 TAB S
1-#6 TAB S
1-#6 TAB T
2-#6 TAB T
1-#6 TAB T
1-#6 TAB U
2-#6 TAB U
1-#6 TAB U
1-#6 TAB V
2-#6 TAB V
1-#6 TAB V
1-#6 TAB W
2-#6 TAB W
1-#6 TAB W
1-#6 TAB X
2-#6 TAB X
1-#6 TAB X
1-#6 TAB Y
2-#6 TAB Y
1-#6 TAB Y
1-#6 TAB Z
2-#6 TAB Z
1-#6 TAB Z
1-#6 TAB AA
2-#6 TAB AA
1-#6 TAB AA
1-#6 TAB AB
2-#6 TAB AB
1-#6 TAB AB
1-#6 TAB AC
2-#6 TAB AC
1-#6 TAB AC
1-#6 TAB AD
2-#6 TAB AD
1-#6 TAB AD
1-#6 TAB AE
2-#6 TAB AE
1-#6 TAB AE
1-#6 TAB AF
2-#6 TAB AF
1-#6 TAB AF
1-#6 TAB AG
2-#6 TAB AG
1-#6 TAB AG
1-#6 TAB AH
2-#6 TAB AH
1-#6 TAB AH
1-#6 TAB AI
2-#6 TAB AI
1-#6 TAB AI
1-#6 TAB AJ
2-#6 TAB AJ
1-#6 TAB AJ
1-#6 TAB AK
2-#6 TAB AK
1-#6 TAB AK
1-#6 TAB AL
2-#6 TAB AL
1-#6 TAB AL
1-#6 TAB AM
2-#6 TAB AM
1-#6 TAB AM
1-#6 TAB AN
2-#6 TAB AN
1-#6 TAB AN
1-#6 TAB AO
2-#6 TAB AO
1-#6 TAB AO
1-#6 TAB AP
2-#6 TAB AP
1-#6 TAB AP
1-#6 TAB AQ
2-#6 TAB AQ
1-#6 TAB AQ
1-#6 TAB AR
2-#6 TAB AR
1-#6 TAB AR
1-#6 TAB AS
2-#6 TAB AS
1-#6 TAB AS
1-#6 TAB AT
2-#6 TAB AT
1-#6 TAB AT
1-#6 TAB AU
2-#6 TAB AU
1-#6 TAB AU
1-#6 TAB AV
2-#6 TAB AV
1-#6 TAB AV
1-#6 TAB AW
2-#6 TAB AW
1-#6 TAB AW
1-#6 TAB AX
2-#6 TAB AX
1-#6 TAB AX
1-#6 TAB AY
2-#6 TAB AY
1-#6 TAB AY
1-#6 TAB AZ
2-#6 TAB AZ
1-#6 TAB AZ
1-#6 TAB BA
2-#6 TAB BA
1-#6 TAB BA
1-#6 TAB BB
2-#6 TAB BB
1-#6 TAB BB
1-#6 TAB BC
2-#6 TAB BC
1-#6 TAB BC
1-#6 TAB BD
2-#6 TAB BD
1-#6 TAB BD
1-#6 TAB BE
2-#6 TAB BE
1-#6 TAB BE
1-#6 TAB BF
2-#6 TAB BF
1-#6 TAB BF
1-#6 TAB BG
2-#6 TAB BG
1-#6 TAB BG
1-#6 TAB BH
2-#6 TAB BH
1-#6 TAB BH
1-#6 TAB BI
2-#6 TAB BI
1-#6 TAB BI
1-#6 TAB BJ
2-#6 TAB BJ
1-#6 TAB BJ
1-#6 TAB BK
2-#6 TAB BK
1-#6 TAB BK
1-#6 TAB BL
2-#6 TAB BL
1-#6 TAB BL
1-#6 TAB BM
2-#6 TAB BM
1-#6 TAB BM
1-#6 TAB BN
2-#6 TAB BN
1-#6 TAB BN
1-#6 TAB BO
2-#6 TAB BO
1-#6 TAB BO
1-#6 TAB BP
2-#6 TAB BP
1-#6 TAB BP
1-#6 TAB BQ
2-#6 TAB BQ
1-#6 TAB BQ
1-#6 TAB BR
2-#6 TAB BR
1-#6 TAB BR
1-#6 TAB BS
2-#6 TAB BS
1-#6 TAB BS
1-#6 TAB BT
2-#6 TAB BT
1-#6 TAB BT
1-#6 TAB BU
2-#6 TAB BU
1-#6 TAB BU
1-#6 TAB BV
2-#6 TAB BV
1-#6 TAB BV
1-#6 TAB BW
2-#6 TAB BW
1-#6 TAB BW
1-#6 TAB BX
2-#6 TAB BX
1-#6 TAB BX
1-#6 TAB BY
2-#6 TAB BY
1-#6 TAB BY
1-#6 TAB BZ
2-#6 TAB BZ
1-#6 TAB BZ
1-#6 TAB CA
2-#6 TAB CA
1-#6 TAB CA
1-#6 TAB CB
2-#6 TAB CB
1-#6 TAB CB
1-#6 TAB CC
2-#6 TAB CC
1-#6 TAB CC
1-#6 TAB CD
2-#6 TAB CD
1-#6 TAB CD
1-#6 TAB CE
2-#6 TAB CE
1-#6 TAB CE
1-#6 TAB CF
2-#6 TAB CF
1-#6 TAB CF
1-#6 TAB CG
2-#6 TAB CG
1-#6 TAB CG
1-#6 TAB CH
2-#6 TAB CH
1-#6 TAB CH
1-#6 TAB CI
2-#6 TAB CI
1-#6 TAB CI
1-#6 TAB CJ
2-#6 TAB CJ
1-#6 TAB CJ
1-#6 TAB CK
2-#6 TAB CK
1-#6 TAB CK
1-#6 TAB CL
2-#6 TAB CL
1-#6 TAB CL
1-#6 TAB CM
2-#6 TAB CM
1-#6 TAB CM
1-#6 TAB CN
2-#6 TAB CN
1-#6 TAB CN
1-#6 TAB CO
2-#6 TAB CO
1-#6 TAB CO
1-#6 TAB CP
2-#6 TAB CP
1-#6 TAB CP
1-#6 TAB CQ
2-#6 TAB CQ
1-#6 TAB CQ
1-#6 TAB CR
2-#6 TAB CR
1-#6 TAB CR
1-#6 TAB CS
2-#6 TAB CS
1-#6 TAB CS
1-#6 TAB CT
2-#6 TAB CT
1-#6 TAB CT
1-#6 TAB CU
2-#6 TAB CU
1-#6 TAB CU
1-#6 TAB CV
2-#6 TAB CV
1-#6 TAB CV
1-#6 TAB CW
2-#6 TAB CW
1-#6 TAB CW
1-#6 TAB CX
2-#6 TAB CX
1-#6 TAB CX
1-#6 TAB CY
2-#6 TAB CY
1-#6 TAB CY
1-#6 TAB CZ
2-#6 TAB CZ
1-#6 TAB CZ
1-#6 TAB DA
2-#6 TAB DA
1-#6 TAB DA
1-#6 TAB DB
2-#6 TAB DB
1-#6 TAB DB
1-#6 TAB DC
2-#6 TAB DC
1-#6 TAB DC
1-#6 TAB DD
2-#6 TAB DD
1-#6 TAB DD
1-#6 TAB DE
2-#6 TAB DE
1-#6 TAB DE
1-#6 TAB DF
2-#6 TAB DF
1-#6 TAB DF
1-#6 TAB DG
2-#6 TAB DG
1-#6 TAB DG
1-#6 TAB DH
2-#6 TAB DH
1-#6 TAB DH
1-#6 TAB DI
2-#6 TAB DI
1-#6 TAB DI
1-#6 TAB DJ
2-#6 TAB DJ
1-#6 TAB DJ
1-#6 TAB DK
2-#6 TAB DK
1-#6 TAB DK
1-#6 TAB DL
2-#6 TAB DL
1-#6 TAB DL
1-#6 TAB DM
2-#6 TAB DM
1-#6 TAB DM
1-#6 TAB DN
2-#6 TAB DN
1-#6 TAB DN
1-#6 TAB DO
2-#6 TAB DO
1-#6 TAB DO
1-#6 TAB DP
2-#6 TAB DP
1-#6 TAB DP
1-#6 TAB DQ
2-#6 TAB DQ
1-#6 TAB DQ
1-#6 TAB DR
2-#6 TAB DR
1-#6 TAB DR
1-#6 TAB DS
2-#6 TAB DS
1-#6 TAB DS
1-#6 TAB DT
2-#6 TAB DT
1-#6 TAB DT
1-#6 TAB DU
2-#6 TAB DU
1-#6 TAB DU
1-#6 TAB DV
2-#6 TAB DV
1-#6 TAB DV
1-#6 TAB DW
2-#6 TAB DW
1-#6 TAB DW
1-#6 TAB DX
2-#6 TAB DX
1-#6 TAB DX
1-#6 TAB DY
2-#6 TAB DY
1-#6 TAB DY
1-#6 TAB DZ
2-#6 TAB DZ
1-#6 TAB DZ
1-#6 TAB EA
2-#6 TAB EA
1-#6 TAB EA
1-#6 TAB EB
2-#6 TAB EB
1-#6 TAB EB
1-#6 TAB EC
2-#6 TAB EC
1-#6 TAB EC
1-#6 TAB ED
2-#6 TAB ED
1-#6 TAB ED
1-#6 TAB EE
2-#6 TAB EE
1-#6 TAB EE
1-#6 TAB EF
2-#6 TAB EF
1-#6 TAB EF
1-#6 TAB EG
2-#6 TAB EG
1-#6 TAB EG
1-#6 TAB EH
2-#6 TAB EH
1-#6 TAB EH
1-#6 TAB EI
2-#6 TAB EI
1-#6 TAB EI
1-#6 TAB EJ
2-#6 TAB EJ
1-#6 TAB EJ
1-#6 TAB EK
2-#6 TAB EK
1-#6 TAB EK
1-#6 TAB EL
2-#6 TAB EL
1-#6 TAB EL
1-#6 TAB EM
2-#6 TAB EM
1-#6 TAB EM
1-#6 TAB EN
2-#6 TAB EN
1-#6 TAB EN
1-#6 TAB EO
2-#6 TAB EO
1-#6 TAB EO
1-#6 TAB EP
2-#6 TAB EP
1-#6 TAB EP
1-#6 TAB EQ
2-#6 TAB EQ
1-#6 TAB EQ
1-#6 TAB ER
2-#6 TAB ER
1-#6 TAB ER
1-#6 TAB ES
2-#6 TAB ES
1-#6 TAB ES
1-#6 TAB ET
2-#6 TAB ET
1-#6 TAB ET
1-#6 TAB EU
2-#6 TAB EU
1-#6 TAB EU
1-#6 TAB EV
2-#6 TAB EV
1-#6 TAB EV
1-#6 TAB EW
2-#6 TAB EW
1-#6 TAB EW
1-#6 TAB EX
2-#6 TAB EX
1-#6 TAB EX
1-#6 TAB EY
2-#6 TAB EY
1-#6 TAB EY
1-#6 TAB EZ
2-#6 TAB EZ
1-#6 TAB EZ
1-#6 TAB FA
2-#6 TAB FA
1-#6 TAB FA
1-#6 TAB FB
2-#6 TAB FB
1-#6 TAB FB
1-#6 TAB FC
2-#6 TAB FC
1-#6 TAB FC
1-#6 TAB FD
2-#6 TAB FD
1-#6 TAB FD
1-#6 TAB FE
2-#6 TAB FE
1-#6 TAB FE
1-#6 TAB FF
2-#6 TAB FF
1-#6 TAB FF
1-#6 TAB FG
2-#6 TAB FG
1-#6 TAB FG
1-#6 TAB FH
2-#6 TAB FH
1-#6 TAB FH
1-#6 TAB FI
2-#6 TAB FI
1-#6 TAB FI
1-#6 TAB FJ
2-#6 TAB FJ
1-#6 TAB FJ
1-#6 TAB FK
2-#6 TAB FK
1-#6 TAB FK
1-#6 TAB FL
2-#6 TAB FL
1-#6 TAB FL
1-#6 TAB FM
2-#6 TAB FM
1-#6 TAB FM
1-#6 TAB FN
2-#6 TAB FN
1-#6 TAB FN
1-#6 TAB FO
2-#6 TAB FO
1-#6 TAB FO
1-#6 TAB FP
2-#6 TAB FP
1-#6 TAB FP
1-#6 TAB FQ
2-#6 TAB FQ
1-#6 TAB FQ
1-#6 TAB FR
2-#6 TAB FR
1-#6 TAB FR
1-#6 TAB FS
2-#6 TAB FS
1-#6 TAB FS
1-#6 TAB FT
2-#6 TAB FT
1-#6 TAB FT
1-#6 TAB FU
2-#6 TAB FU
1-#6 TAB FU
1-#6 TAB FV
2-#6 TAB FV
1-#6 TAB FV
1-#6 TAB FW
2-#6 TAB FW
1-#6 TAB FW
1-#6 TAB FX
2-#6 TAB FX
1-#6 TAB FX
1-#6 TAB FY
2-#6 TAB FY
1-#6 TAB FY
1-#6 TAB FZ
2-#6 TAB FZ
1-#6 TAB FZ
1-#6 TAB GA
2-#6 TAB GA
1-#6 TAB GA
1-#6 TAB GB
2-#6 TAB GB
1-#6 TAB GB
1-#6 TAB GC
2-#6 TAB GC
1-#6 TAB GC
1-#6 TAB GD
2-#6 TAB GD
1-#6 TAB GD
1-#6 TAB GE
2-#6 TAB GE
1-#6 TAB GE
1-#6 TAB GF
2-#6 TAB GF
1-#6 TAB GF
1-#6 TAB GG
2-#6 TAB GG
1-#6 TAB GG
1-#6 TAB GH
2-#6 TAB GH
1-#6 TAB GH
1-#6 TAB GI
2-#6 TAB GI
1-#6 TAB GI
1-#6 TAB GJ
2-#6 TAB GJ
1-#6 TAB GJ
1-#6 TAB GK
2-#6 TAB GK
1-#6 TAB GK
1-#6 TAB GL
2-#6 TAB GL
1-#6 TAB GL
1-#6 TAB GM
2-#6 TAB GM
1-#6 TAB GM
1-#6 TAB GN
2-#6 TAB GN
1-#6 TAB GN
1-#6 TAB GO
2-#6 TAB GO
1-#6 TAB GO
1-#6 TAB GP
2-#6 TAB GP
1-#6 TAB GP
1-#6 TAB GQ
2-#6 TAB GQ
1-#6 TAB GQ
1-#6 TAB GR
2-#6 TAB GR
1-#6 TAB GR
1-#6 TAB GS
2-#6 TAB GS
1-#6 TAB GS
1-#6 TAB GT
2-#6 TAB GT
1-#6 TAB GT
1-#6 TAB GU
2-#6 TAB GU
1-#6 TAB GU
1-#6 TAB GV
2-#6 TAB GV
1-#6 TAB GV
1-#6 TAB GW
2-#6 TAB GW
1-#6 TAB GW
1-#6 TAB GX
2-#6 TAB GX
1-#6 TAB GX
1-#6 TAB GY
2-#6 TAB GY
1-#6 TAB GY
1-#6 TAB GZ
2-#6 TAB GZ
1-#6 TAB GZ
1-#6 TAB HA
2-#6 TAB HA
1-#6 TAB HA
1-#6 TAB HB
2-#6 TAB HB
1-#6 TAB HB
1-#6 TAB HC
2-#6 TAB HC
1-#6 TAB HC
1-#6 TAB HD
2-#6 TAB HD
1-#6 TAB HD
1-#6 TAB HE
2-#6 TAB HE
1-#6 TAB HE
1-#6 TAB HF
2-#6 TAB HF
1-#6 TAB HF
1-#6 TAB HG
2-#6 TAB HG
1-#6 TAB HG
1-#6 TAB HH
2-#6 TAB HH
1-#6 TAB HH
1-#6 TAB HI
2-#6 TAB HI
1-#6 TAB HI
1-#6 TAB HJ
2-#6 TAB HJ
1-#6 TAB HJ
1-#6 TAB HK
2-#6 TAB HK
1-#6 TAB HK
1-#6 TAB HL
2-#6 TAB HL
1-#6 TAB HL
1-#6 TAB HM
2-#6 TAB HM
1-#6 TAB HM
1-#6 TAB HN
2-#6 TAB HN
1-#6 TAB HN
1-#6 TAB HO
2-#6 TAB HO
1-#6 TAB HO
1-#6 TAB HP
2-#6 TAB HP
1-#6 TAB HP
1-#6 TAB HQ
2-#6 TAB HQ
1-#6 TAB HQ
1-#6 TAB HR
2-#6 TAB HR
1-#6 TAB HR
1-#6 TAB HS
2-#6 TAB HS
1-#6 TAB HS
1-#6 TAB HT
2-#6 TAB HT
1-#6 TAB HT
1-#6 TAB HU
2-#6 TAB HU
1-#6 TAB HU
1-#6 TAB HV
2-#6 TAB HV
1-#6 TAB HV
1-#6 TAB HW
2-#6 TAB HW
1-#6 TAB HW
1-#6 TAB HX
2-#6 TAB HX
1-#6 TAB HX
1-#6 TAB HY
2-#6 TAB HY
1-#6 TAB HY
1-#6 TAB HZ
2-#6 TAB HZ
1-#6 TAB HZ
1-#6 TAB IA
2-#6 TAB IA
1-#6 TAB IA
1-#6 TAB IB
2-#6 TAB IB
1-#6 TAB IB
1-#6 TAB IC
2-#6 TAB IC
1-#6 TAB IC
1-#6 TAB ID
2-#6 TAB ID
1-#6 TAB ID
1-#6 TAB IE
2-#6 TAB IE
1-#6 TAB IE
1-#6 TAB IF
2-#6 TAB IF
1-#6 TAB IF
1-#6 TAB IG
2-#6 TAB IG
1-#6 TAB IG
1-#6 TAB IH
2-#6 TAB IH
1-#6 TAB IH
1-#6 TAB II
2-#6 TAB II
1-#6 TAB II
1-#6 TAB IJ
2-#6 TAB IJ
1-#6 TAB IJ
1-#6 TAB IK
2-#6 TAB IK
1-#6 TAB IK
1-#6 TAB IL
2-#6 TAB IL
1-#6 TAB IL
1-#6 TAB IM
2-#6 TAB IM
1-#6 TAB IM
1-#6 TAB IN
2-#6 TAB IN
1-#6 TAB IN
1-#6 TAB IO
2-#6 TAB IO
1-#6 TAB IO
1-#6 TAB IP
2-#6 TAB IP
1-#6 TAB IP
1-#6 TAB IQ
2-#6 TAB IQ
1-#6 TAB IQ
1-#6 TAB IR
2-#6 TAB IR
1-#6 TAB IR
1-#6 TAB IS
2-#6 TAB IS
1-#6 TAB IS
1-#6 TAB IT
2-#6 TAB IT
1-#6 TAB IT
1-#6 TAB IU
2-#6 TAB IU
1-#6 TAB IU
1-#6 TAB IV
2-#6 TAB IV
1-#6 TAB IV
1-#6 TAB IW
2-#6 TAB IW
1-#6 TAB IW
1-#6 TAB IX
2-#6 TAB IX
1-#6 TAB IX
1-#6 TAB IY
2-#6 TAB IY
1-#6 TAB IY
1-#6 TAB IZ
2-#6 TAB IZ
1-#6 TAB IZ
1-#6 TAB JA
2-#6 TAB JA
1-#6 TAB JA
1-#6 TAB JB
2-#6 TAB JB
1-#6 TAB JB
1-#6 TAB JC
2-#6 TAB JC
1-#6 TAB JC
1-#6 TAB JD
2-#6 TAB JD
1-#6 TAB JD
1-#6 TAB JE
2-#6 TAB JE
1-#6 TAB JE
1-#6 TAB JF
2-#6 TAB JF
1-#6 TAB JF
1-#6 TAB JG
2-#6 TAB JG
1-#6 TAB JG
1-#6 TAB JH
2-#6 TAB JH
1-#6 TAB JH
1-#6 TAB JI
2-#6 TAB JI
1-#6 TAB JI
1-#6 TAB JJ
2-#6 TAB JJ
1-#6 TAB JJ
1-#6 TAB JK
2-#6 TAB JK
1-#6 TAB JK
1-#6 TAB JL
2-#6 TAB JL
1-#6 TAB JL
1-#6 TAB JM
2-#6 TAB JM
1-#6 TAB JM
1-#6 TAB JN
2-#6 TAB JN
1-#6 TAB JN
1-#6 TAB JO
2-#6 TAB JO
1-#6 TAB JO
1-#6 TAB JP
2-#6 TAB JP
1-#6 TAB JP
1-#6 TAB JQ
2-#6 TAB JQ
1-#6 TAB JQ
1-#6 TAB JR
2-#6 TAB JR
1-#6 TAB JR
1-#6 TAB JS
2-#6 TAB JS
1-#6 TAB JS
1-#6 TAB JT
2-#6 TAB JT
1-#6 TAB JT
1-#6 TAB JU
2-#6 TAB JU
1-#6 TAB JU
1-#6 TAB JV
2-#6 TAB JV
1-#6 TAB JV
1-#6 TAB JW
2-#6 TAB JW
1-#6 TAB JW
1-#6 TAB JX
2-#6 TAB JX
1-#6 TAB JX
1-#6 TAB JY
2-#6 TAB JY
1-#6 TAB JY
1-#6 TAB JZ
2-#6 TAB JZ
1-#6 TAB JZ
1-#6 TAB KA
2-#6 TAB KA
1-#6 TAB KA
1-#6 TAB KB
2-#6 TAB KB
1-#6 TAB KB
1-#6 TAB KC
2-#6 TAB KC
1-#6 TAB KC
1-#6 TAB KD
2-#6 TAB KD
1-#6 TAB KD
1-#6 TAB KE
2-#6 TAB KE
1-#6 TAB KE
1-#6 TAB KF
2-#6 TAB KF
1-#6 TAB KF
1-#6 TAB KG
2-#6 TAB KG
1-#6 TAB KG
1-#6 TAB KH
2-#6 TAB KH
1-#6 TAB KH
1-#6 TAB KI
2-#6 TAB KI
1-#6 TAB KI
1-#6 TAB KJ
2-#6 TAB KJ
1-#6 TAB KJ
1-#6 TAB KK
2-#6 TAB KK
1-#6 TAB KK
1-#6 TAB KL
2-#6 TAB KL
1-#6 TAB KL
1-#6 TAB KM
2-#6 TAB KM
1-#6 TAB KM
1-#6 TAB KN
2-#6 TAB KN
1-#6 TAB KN
1-#6 TAB KO
2-#6 TAB KO
1-#6 TAB KO
1-#6 TAB KP
2-#6 TAB KP
1-#6 TAB KP
1-#6 TAB KQ
2-#6 TAB KQ
1-#6 TAB KQ
1-#6 TAB KR
2-#6 TAB KR
1-#6 TAB KR
1-#6 TAB KS
2-#6 TAB KS
1-#6 TAB KS
1-#6 TAB KT
2-#6 TAB KT
1-#6 TAB KT
1-#6 TAB KU
2-#6 TAB KU
1-#6 TAB KU
1-#6 TAB KV
2-#6 TAB KV
1-#6 TAB KV
1-#6 TAB KW
2-#6 TAB KW
1-#6 TAB KW
1-#6 TAB KX
2-#6 TAB KX
1-#6 TAB KX
1-#6 TAB KY
2-#6 TAB KY
1-#6 TAB KY
1-#6 TAB KZ
2-#6 TAB KZ
1-#6 TAB KZ
1-#6 TAB LA
2-#6 TAB LA
1-#6 TAB LA
1-#6 TAB LB
2-#6 TAB LB
1-#6 TAB LB
1-#6 TAB LC
2-#6 TAB LC
1-#6 TAB LC
1-#6 TAB LD
2-#6 TAB LD
1-#6 TAB LD
1-#6 TAB LE
2-#6 TAB LE
1-#6 TAB LE
1-#6 TAB LF
2-#6 TAB LF
1-#6 TAB LF
1-#6 TAB LG
2-#6 TAB LG
1-#6 TAB LG
1-#6 TAB LH
2-#6 TAB LH
1-#6 TAB LH
1-#6 TAB LI
2-#6 TAB LI
1-#6 TAB LI
1-#6 TAB LJ
2-#6 TAB LJ
1-#6 TAB LJ
1-#6 TAB LK
2-#6 TAB LK
1-#6 TAB LK
1-#6 TAB LL
2-#6 TAB LL
1-#6 TAB LL
1-#6 TAB LM
2-#6 TAB LM
1-#6 TAB LM
1-#6 TAB LN
2-#6 TAB LN
1-#6 TAB LN
1-#6 TAB LO
2-#6 TAB LO
1-#6 TAB LO
1-#6 TAB LP
2-#6 TAB LP
1-#6 TAB LP
1-#6 TAB LQ
2-#6 TAB LQ
1-#6 TAB LQ
1-#6 TAB LR
2-#6 TAB LR
1-#6 TAB LR
1-#6 TAB LS
2-#6 TAB LS
1-#6 TAB LS
1-#6 TAB LT
2-#6 TAB LT
1-#6 TAB LT
1-#6 TAB LU
2-#6 TAB LU
1-#6 TAB LU
1-#6 TAB LV
2-#6 TAB LV
1-#6 TAB LV
1-#6 TAB LW
2-#6 TAB LW
1-#6 TAB LW
1-#6 TAB LX
2-#6 TAB LX
1-#6 TAB LX
1-#6 TAB LY
2-#6 TAB LY
1-#6 TAB LY
1-#6 TAB LZ
2-#6 TAB LZ
1-#6 TAB LZ
1-#6 TAB MA
2-#6 TAB MA
1-#6 TAB MA
1-#6 TAB MB
2-#6 TAB MB
1-#6 TAB MB
1-#6 TAB MC
2-#6 TAB MC
1-#6 TAB MC
1-#6 TAB MD
2-#6 TAB MD
1-#6 TAB MD
1-#6 TAB ME
2-#6 TAB ME
1-#6 TAB ME
1-#6 TAB MF
2-#6 TAB MF
1-#6 TAB MF
1-#6 TAB MG
2-#6 TAB MG
1-#6 TAB MG
1-#6 TAB MH
2-#6 TAB MH
1-#6 TAB MH
1-#6 TAB MI
2-#6 TAB MI
1-#6 TAB MI
1-#6 TAB MJ
2-#6 TAB MJ
1-#6 TAB MJ
1-#6 TAB MK
2-#6 TAB MK
1-#6 TAB MK
1-#6 TAB ML
2-#6 TAB ML
1-#6 TAB ML
1-#6 TAB MM
2-#6 TAB MM
1-#6 TAB MM
1-#6 TAB MN
2-#6 TAB MN
1-#6 TAB MN
1-#6 TAB MO
2-#6 TAB MO
1-#6 TAB MO
1-#6 TAB MP
2-#6 TAB MP
1-#6 TAB MP
1-#6 TAB MQ
2-#6 TAB MQ
1-#6 TAB MQ
1-#6 TAB MR
2-#6 TAB MR
1-#6 TAB MR
1-#6 TAB MS
2-#6 TAB MS
1-#6 TAB MS
1-#6 TAB MT
2-#6 TAB MT
1-#6 TAB MT
1-#6 TAB MU
2-#6 TAB MU
1-#6 TAB MU
1-#6 TAB MV
2-#6 TAB MV
1-#6 TAB MV
1-#6 TAB MW
2-#6 TAB MW
1-#6 TAB MW
1-#6 TAB MX
2-#6 TAB MX
1-#6 TAB MX
1-#6 TAB MY
2-#6 TAB MY
1-#6 TAB MY
1-#6 TAB MZ
2-#6 TAB MZ
1-#6 TAB MZ
1-#6 TAB NA
2-#6 TAB NA
1-#6 TAB NA
1-#6 TAB NB
2-#6 TAB NB
1-#6 TAB NB
1-#6 TAB NC
2-#6 TAB NC
1-#6 TAB NC
1-#6 TAB ND
2-#6 TAB ND
1-#6 TAB ND
1-#6 TAB NE
2-#6 TAB NE
1-#6 TAB NE
1-#6 TAB NF
2-#6 TAB NF
1-#6 TAB NF
1-#6 TAB NG
2-#6 TAB NG
1-#6 TAB NG
1-#6 TAB NH
2-#6 TAB NH
1-#6 TAB NH
1-#6 TAB NI
2-#6 TAB NI
1-#6 TAB NI
1-#6 TAB NJ
2-#6 TAB NJ
1-#6 TAB NJ
1-#6 TAB NK
2-#6 TAB NK
1-#6 TAB NK
1-#6 TAB NL
2-#6 TAB NL
1-#6 TAB NL
1-#6 TAB NM
2-#6 TAB NM
1-#6 TAB NM
1-#6 TAB NN
2-#6 TAB NN
1-#6 TAB NN
1-#6 TAB NO
2-#6 TAB NO
1-#6 TAB NO
1-#6 TAB NP
2-#6 TAB NP
1-#6 TAB NP
1-#6 TAB NQ
2-#6 TAB NQ
1-#6 TAB NQ
1-#6 TAB NR
2-#6 TAB NR
1-#6 TAB NR
1-#6 TAB NS
2-#6 TAB NS
1-#6 TAB NS
1-#6 TAB NT
2-#6 TAB NT
1-#6 TAB NT
1-#6 TAB NU
2-#6 TAB NU
1-#6 TAB NU
1-#6 TAB NV
2-#6 TAB NV
1-#6 TAB NV
1-#6 TAB NW
2-#6 TAB NW
1-#6 TAB NW
1-#6 TAB NX
2-#6 TAB NX
1-#6 TAB NX
1-#6 TAB NY
2-#6 TAB NY
1-#6 TAB NY
1-#6 TAB NZ
2-#6 TAB NZ
1-#6 TAB NZ
1-#6 TAB OA
2-#6 TAB OA
1-#6 TAB OA
1-#6 TAB OB
2-#6 TAB OB
1-#6 TAB OB
1-#6 TAB OC
2-#6 TAB OC
1-#6 TAB OC
1-#6 TAB OD
2-#6 TAB OD
1-#6 TAB OD
1-#6 TAB OE
2-#6 TAB OE
1-#6 TAB OE
1-#6 TAB OF
2-#6 TAB OF
1-#6 TAB OF
1-#6 TAB OG
2-#6 TAB OG
1-#6 TAB OG
1-#6 TAB OH
2-#6 TAB OH
1-#6 TAB OH
1-#6 TAB OI
2-#6 TAB OI
1-#6 TAB OI
1-#6 TAB OJ
2-#6 TAB OJ
1-#6 TAB OJ
1-#6 TAB OK
2-#6 TAB OK
1-#6 TAB OK
1-#6 TAB OL
2-#6 TAB OL
1-#6 TAB OL
1-#6 TAB OM
2-#6 TAB OM
1-#6 TAB OM
1-#6 TAB ON
2-#6 TAB ON
1-#6 TAB ON
1-#6 TAB OO
2-#6 TAB OO
1-#6 TAB OO
1-#6 TAB OP
2-#6 TAB OP
1-#6 TAB OP
1-#6 TAB OQ
2-#6 TAB OQ
1-#6 TAB OQ
1-#6 TAB OR
2-#6 TAB OR
1-#6 TAB OR
1-#6 TAB OS
2-#6 TAB OS
1-#6 TAB OS
1-#6 TAB OT
2-#6 TAB OT
1-#6 TAB OT
1-#6 TAB OU
2-#6 TAB OU
1-#6 TAB OU
1-#6 TAB OV
2-#6 TAB OV
1-#6 TAB OV
1-#6 TAB OW
2-#6 TAB OW
1-#6 TAB OW
1-#6 TAB OX
2-#6 TAB OX
1-#6 TAB OX
1-#6 TAB OY
2-#6 TAB OY
1-#6 TAB OY
1-#6 TAB OZ
2-#6 TAB OZ
1-#6 TAB OZ
1-#6 TAB PA
2-#6 TAB PA
1-#6 TAB PA
1-#6 TAB PB
2-#6 TAB PB
1-#6 TAB PB
1-#6 TAB PC
2-#6 TAB PC
1-#6 TAB PC
1-#6 TAB PD
2-#6 TAB PD
1-#6 TAB PD
1-#6 TAB PE
2-#6 TAB PE
1-#6 TAB PE
1-#6 TAB PF
2-#6 TAB PF
1-#6 TAB PF
1-#6 TAB PG
2-#6 TAB PG
1-#6 TAB PG
1-#6 TAB PH
2-#6 TAB PH
1-#6 TAB PH
1-#6 TAB PI
2-#6 TAB PI
1-#6 TAB PI
1-#6 TAB PJ
2-#6 TAB PJ
1-#6 TAB PJ
1-#6 TAB PK
2-#6 TAB PK
1-#6 TAB PK
1-#6 TAB PL
2-#6 TAB PL
1-#6 TAB PL
1-#6 TAB PM
2-#6 TAB PM
1-#6 TAB PM
1-#6 TAB PN
2-#6 TAB PN
1-#6 TAB PN
1-#6 TAB PO
2-#6 TAB PO
1-#6 TAB PO
1-#6 TAB PP
2-#6 TAB PP
1-#6 TAB PP
1-#6 TAB PQ
2-#6 TAB PQ
1-#6 TAB PQ
1-#6 TAB PR
2-#6 TAB PR
1-#6 TAB PR
1-#6 TAB PS
2-#6 TAB PS
1-#6 TAB PS
1-#6 TAB PT
2-#6 TAB PT
1-#6 TAB PT
1-#6 TAB PU
2-#6 TAB PU
1-#6 TAB PU
1-#6 TAB PV
2-#6 TAB PV
1-#6 TAB PV
1-#6 TAB PW
2-#6 TAB PW
1-#6 TAB PW
1-#6 TAB PX
2-#6 TAB PX
1-#6 TAB PX
1-#6 TAB PY
2-#6 TAB PY
1-#6 TAB PY
1-#6 TAB PZ
2-#6 TAB PZ
1-#6 TAB PZ
1-#6 TAB QA
2-#6 TAB QA
1-#6 TAB QA
1-#6 TAB QB
2-#6 TAB QB
1-#6 TAB QB
1-#6 TAB QC
2-#6 TAB QC
1-#6 TAB QC
1-#6 TAB QD
2-#6 TAB QD
1-#6 TAB QD
1-#6 TAB QE
2-#6 TAB QE
1-#6 TAB QE
1-#6 TAB QF
2-#6 TAB QF
1-#6 TAB QF
1-#6 TAB QG
2-#6 TAB QG
1-#6 TAB QG
1-#6 TAB QH
2-#6 TAB QH
1-#6 TAB QH
1-#6 TAB QI
2-#6 TAB QI
1-#6 TAB QI
1-#6 TAB QJ
2-#6 TAB QJ
1-#6 TAB QJ
1-#6 TAB QK
2-#6 TAB QK
1-#6 TAB QK
1-#6 TAB QL
2-#6 TAB QL
1-#6 TAB QL
1-#6 TAB QM
2-#6 TAB QM
1-#6 TAB QM
1-#6 TAB QN
2-#6 TAB QN
1-#6 TAB QN
1-#6 TAB QO
2-#6 TAB QO
1-#6 TAB QO
1-#6 TAB QP
2-#6 TAB QP
1-#6 TAB QP
1-#6 TAB QQ
2-#6 TAB QQ
1-#6 TAB QQ
1-#6 TAB QR
2-#6 TAB QR
1-#6 TAB QR
1-#6 TAB QS
2-#6 TAB QS
1-#6 TAB QS
1-#6 TAB QT
2-#6 TAB QT
1-#6 TAB QT
1-#6 TAB QU
2-#6 TAB QU
1-#6 TAB QU
1-#6 TAB QV
2-#6 TAB QV
1-#6 TAB QV
1-#6 TAB QW
2-#6 TAB QW
1-#6 TAB QW
1-#6 TAB QX
2-#6 TAB QX
1-#6 TAB QX
1-#6 TAB QY
2-#6 TAB QY
1-#6 TAB QY
1-#6 TAB QZ
2-#6 TAB QZ
1-#6 TAB QZ
1-#6 TAB RA
2-#6 TAB RA
1-#6 TAB RA
1-#6 TAB RB
2-#6 TAB RB
1-#6 TAB RB
1-#6 TAB RC
2-#

1 S-042 4TH FLOOR FRAMING PLAN - PART 2

SCALE: 3/16" = 1'-0"

NOTE:
1. FOR NOTES SEE S-030

KEY PLAN:

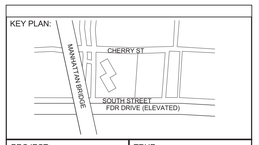

PROJECT NORTH

TRUE NORTH

DEVELOPER:
EXTELL DEVELOPMENT COMPANY
805 Third Ave, 7th Floor
New York, NY 10022
TEL: 212-712-6000 FAX: 212-712-6100

ARCHITECT OF RECORD:
AAI ARCHITECTS, P.C.
14 Wall Street, 2nd Floor
New York, NY 10005
TEL: 212-964-4040 FAX: 212-964-4090

INTERIOR DESIGNER:
MEYER DAVIS
180 Varick St, suite 404
New York, NY 10014
TEL: 212-627-5574

LANDSCAPE DESIGNER:
WEST 8 URBAN DESIGN & LANDSCAPE ARCHITECTURE P.C.
333 Hudson Street, Suite 905
New York, NY 10013
TEL: 212-285-0088 FAX: 212-285-0228

STRUCTURAL ENGINEERS:
WSP
228 East 45th Street
New York, NY 10017
TEL: 212-687-9888 FAX: 646-487-5501

MEP ENGINEERS:
ICOR ASSOCIATES, LLC
485 C Route 1 South, Suite 200
Iseline, NJ 08830
TEL: 908-272-3300 FAX: 908-272-4440

GEOTECHNICAL ENGINEERS:
LANGAN ENGINEERING & ENVIRONMENTAL SERVICES
21 Penn Plaza - 360 West 31st Street, 8th Floor
New York, NY 10001
TEL: 212.479.5400 FAX: 212.479.5444

No.	DESCRIPTION:	DATE:
1	DESIGN DEVELOPMENT	10-07-14
2	STEEL BID PACKAGE	02-24-15
3	CONCRETE BID PACKAGE	03-06-15
4	50% CONSTRUCTION DOCUMENTS	04-08-15
5	ADDENDUM #5	05-01-15
6	ISSUED FOR FILING	07-28-15
7	80% CONSTRUCTION DOCUMENTS	08-14-15
8	ADDENDUM #16	02-04-16
9	ASI #58	03-04-16
10	ISSUED FOR FILING	03-07-16

Discrepancies must be reported immediately to the Architect before proceeding. Only figured dimensions are to be used. Contractors must check all dimensions on site. This drawing is protected by copyright.

ALL DIMENSIONS ARE SHOWN IN IMPERIAL.

CONSULTANT:
WSP

PROJECT:
252 SOUTH STREET
NEW YORK, NY

DRAWING TITLE:
4TH FLOOR FRAMING PLAN - PART 2

SEAL & SIGNATURE:
STATE OF NEW YORK
AHMAD RAHIMIAN
No. 065537
LICENSED PROFESSIONAL ENGINEER

DATE:	09/24/14
PROJECT No:	1302510
DRAWN: CAD	REV:
CHK: CL	
SCALE:	
DWG No:	S-042.02
DOB PAGE No:	of

DOB EMPLOYEE STAMP:
Damian Titus
Buildings
APPROVED
Under Directive 2 of 1975
AMENDED APPLICATION
Date: 04/11/2016
NYC Development Hub

DOB B-SCAN:

30" x 42" Arch E1 - SHEET SIZE

FILE NAME:
PLOT DATE:

DEPT OF BLDGS 121105638 Job Number
E 5076325015 Scan Code
30" x 42" Arch E1 - SHEET SIZE

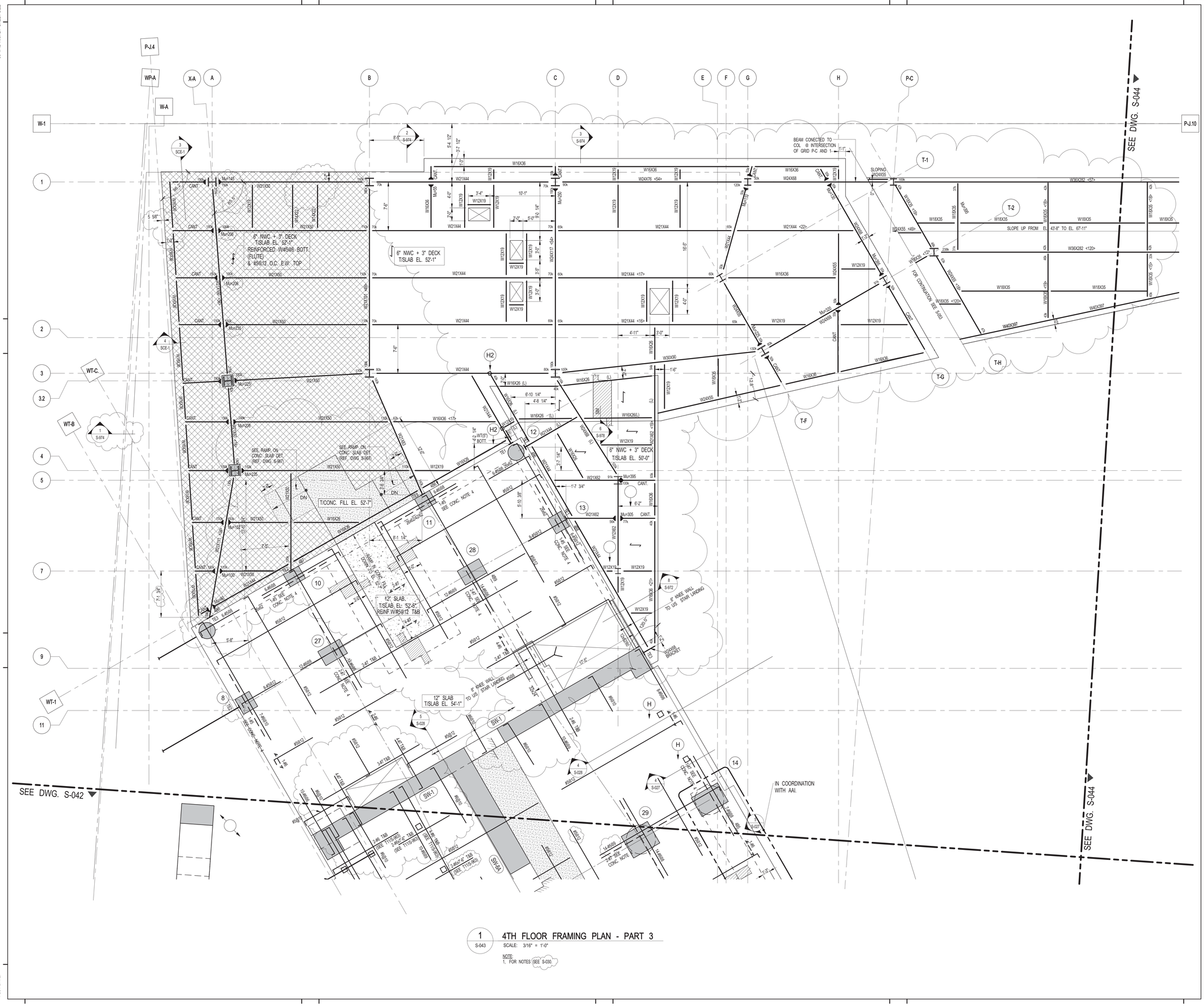

1 S-043 **4TH FLOOR FRAMING PLAN - PART 3**

SCALE: 3/16" = 1'-0"

NOTE:
1. FOR NOTES SEE S-030.

KEY PLAN:

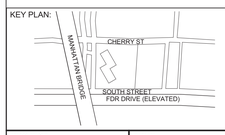

PROJECT NORTH | TRUE NORTH

DEVELOPER:
EXTELL DEVELOPMENT COMPANY
805 Third Ave, 7th Floor
New York, NY 10022
TEL: 212-712-6000 FAX: 212-712-6100

ARCHITECT OF RECORD:
AAI ARCHITECTS, P.C.
14 Wall Street, 2nd Floor
New York, NY 10005
TEL: 212-964-4040 FAX: 212-964-4090

INTERIOR DESIGNER:
MEYER DAVIS
180 Varick St, suite 404
New York, NY 10014
TEL: 212-627-5574

LANDSCAPE DESIGNER:
WEST 8 URBAN DESIGN & LANDSCAPE ARCHITECTURE P.C.
333 Hudson Street, Suite 905
New York, NY 10013
TEL: 212-285-0088 FAX: 212-285-0228

STRUCTURAL ENGINEERS:
WSP
228 East 45th Street
New York, NY 10017
TEL: 212-687-9888 FAX: 646-487-5501

MEP ENGINEERS:
ICOR ASSOCIATES, LLC
485 C Route 1 South, Suite 200
Iseline, NJ 08830
TEL: 908-272-3300 FAX: 908-272-4440

GEOTECHNICAL ENGINEERS:
LANGAN ENGINEERING & ENVIRONMENTAL SERVICES
21 Penn Plaza - 360 West 31st Street, 8th Floor
New York, NY 10001
TEL: 212.479.5400 FAX: 212.479.5444

No.	DESCRIPTION:	DATE:
1	DESIGN DEVELOPMENT	10-07-14
2	STEEL BID PACKAGE	02-24-15
3	CONCRETE BID PACKAGE	03-06-15
4	RFI 190 UPDATE	03-17-15
5	ADDENDUM #3	03-27-15
6	50% CONSTRUCTION DOCUMENTS	04-08-15
7	ADDENDUM #4	04-24-15
8	ADDENDUM #5	05-01-15
9	ADDENDUM #10	07-20-15
10	ISSUED FOR FILING	07-28-15
11	80% CONSTRUCTION DOCUMENTS	08-14-15
12	ADDENDUM #11	09-25-15
13	ADDENDUM #14	10-22-15
14	ADDENDUM #15	11-18-15
15	ADDENDUM #16	02-04-16
16	ASI #55	02-12-16
17	ASI #58	03-04-16
18	ISSUED FOR FILING	03-07-16

Discrepancies must be reported immediately to the Architect before proceeding. Only figured dimensions are to be used. Contractors must check all dimensions on site. This drawing is protected by copyright.

ALL DIMENSIONS ARE SHOWN IN IMPERIAL.

CONSULTANT:
WSP

PROJECT:
252 SOUTH STREET
NEW YORK, NY

DRAWING TITLE:
4TH FLOOR FRAMING PLAN - PART 3

SEAL & SIGNATURE:
STATE OF NEW YORK · AHMAD RASTEGAR · No. 085057 · LICENSED PROFESSIONAL ENGINEER

DATE:	09/24/14
PROJECT No:	1302510
DRAWN: CAD	REV:
CHK: CL	
SCALE:	
DWG No:	**S-043.02**
DOB PAGE No:	of

DOB EMPLOYEE STAMP:
Damian Titus
Buildings
APPROVED
Under Directive 2 of 1975
AMENDED APPLICATION
Date: 04/11/2016
NYC Development Hub

DOB B-SCAN:

FILE NAME:
PLOT DATE:

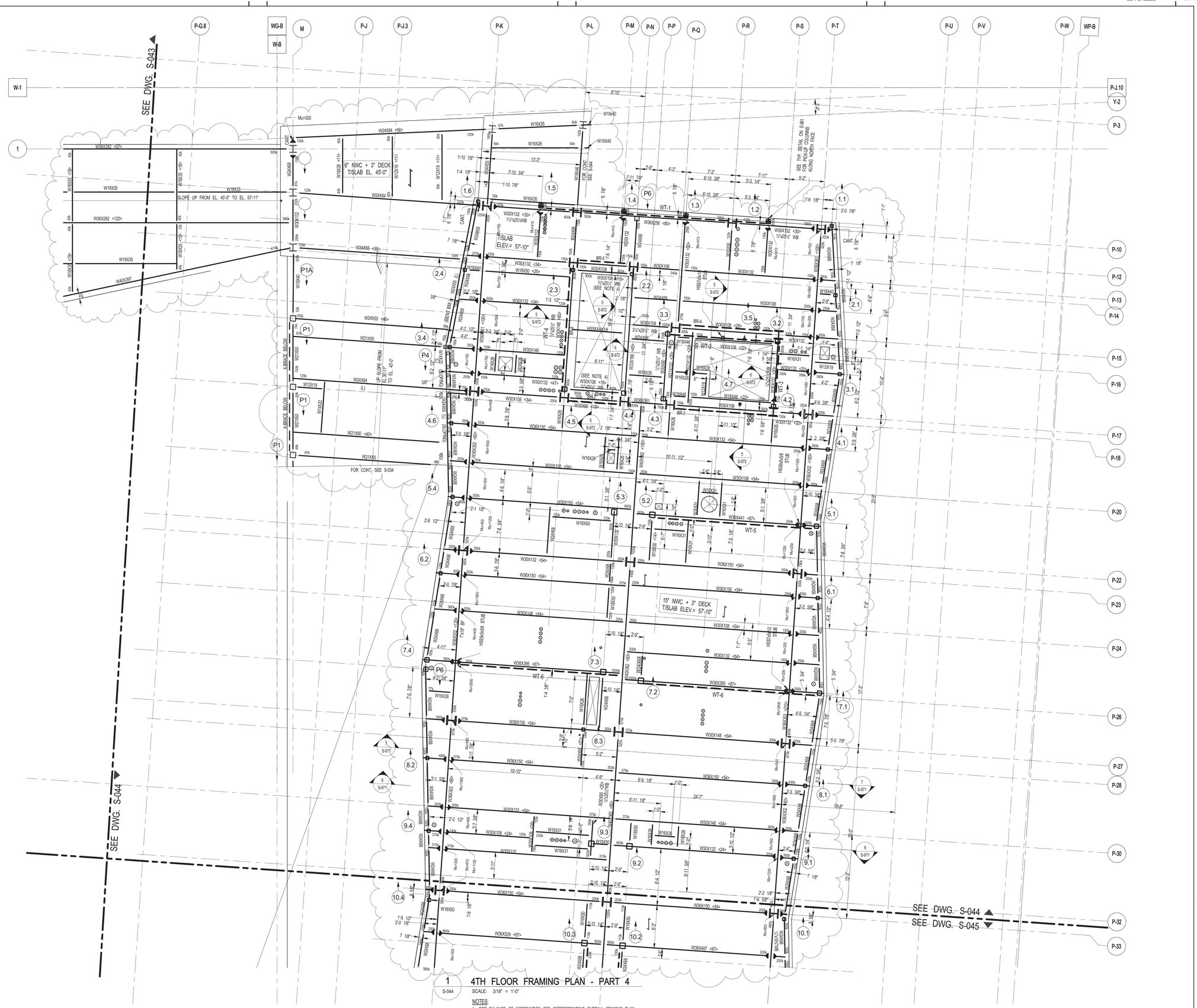

1 4TH FLOOR FRAMING PLAN - PART 4
S-044 SCALE: 3/16" = 1'-0"

NOTES:
1. FOR BALANCE OF INFORMATION SEE CORRESPONDING OVERALL FRAMING PLAN.
2. SEE TYPICAL DETAIL ON S-962 FOR SHEAR WALL POSTS / INTERIOR BEARING WALL.
3. FOR LOCATIONS OF SHEARWALL POSTS / BEARING WALL POSTS REFER TO S-201 THRU S-204 BY SPECIALTY ENGINEERS.(DATED 01.30.2015)
4. W-BEAM TOP & BOTTOM FLANGE TO BE CUT 6" WIDE.

KEY PLAN:

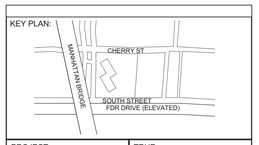

PROJECT NORTH | TRUE NORTH

DEVELOPER:
EXTELL DEVELOPMENT COMPANY
805 Third Ave, 7th Floor
New York, NY 10022
TEL: 212-712-6000 FAX: 212-712-6100

ARCHITECT OF RECORD:
AAI ARCHITECTS, P.C.
14 Wall Street, 2nd Floor
New York, NY 10005
TEL: 212-964-4040 FAX: 212-964-4090

INTERIOR DESIGNER:
MEYER DAVIS
180 Varick St, suite 404
New York, NY 10014
TEL: 212-627-5574

LANDSCAPE DESIGNER:
WEST 8 URBAN DESIGN & LANDSCAPE ARCHITECTURE P.C.
333 Hudson Street, Suite 905
New York, NY 10013
TEL: 212-285-0088 FAX: 212-285-0228

STRUCTURAL ENGINEERS:
WSP
228 East 45th Street
New York, NY 10017
TEL: 212-687-9888 FAX: 646-487-5501

MEP ENGINEERS:
ICOR ASSOCIATES, LLC
485 C Route 1 South, Suite 200
Iseline, NJ 08830
TEL: 908-272-3300 FAX: 908-272-4440

GEOTECHNICAL ENGINEERS:
LANGAN ENGINEERING & ENVIRONMENTAL SERVICES
21 Penn Plaza - 360 West 31st Street, 8th Floor
New York, NY 10001
TEL: 212.479.5400 FAX: 212.479.5444

No.	DESCRIPTION:	DATE:
1	DESIGN DEVELOPMENT	10-07-14
2	STEEL BID PACKAGE	02-24-15
3	ADDENDUM #3	03-27-15
4	50% CONSTRUCTION DOCUMENTS	04-08-15
5	ADDENDUM #4	04-24-15
6	ADDENDUM #10	07-20-15
7	ISSUED FOR FILING	07-28-15
8	80% CONSTRUCTION DOCUMENTS	08-14-15
9	ASI #13	08-26-15
10	ADDENDUM #14	10-22-15
11	90% CONSTRUCTION DOCUMENTS	01-15-16
12	ADDENDUM #16	02-04-16
13	ASI #56	02-19-16
14	ASI #57	02-26-16
15	ASI #58	03-04-16
16	ISSUED FOR FILING	03-07-16

Discrepancies must be reported immediately to the Architect before proceeding. Only figured dimensions are to be used. Contractors must check all dimensions on site. This drawing is protected by copyright.

ALL DIMENSIONS ARE SHOWN IN IMPERIAL.

CONSULTANT:
WSP

PROJECT:
252 SOUTH STREET
NEW YORK, NY

DRAWING TITLE:
4TH FLOOR FRAMING PLAN - PART 4

SEAL & SIGNATURE:
STATE OF NEW YORK
AHMAD RAHIMIAN
No. 065537
LICENSED PROFESSIONAL ENGINEER

DATE:	09/24/14
PROJECT No:	1302510
DRAWN: CAD	REV:
CHK: CL	
SCALE:	
DWG No:	S-044.02
DOB PAGE No:	of

DOB EMPLOYEE STAMP:
Damian Titus
Buildings
APPROVED
Under Directive 2 of 1975
AMENDED APPLICATION
Date: 04/11/2016
NYC Development Hub

DOB B-SCAN:

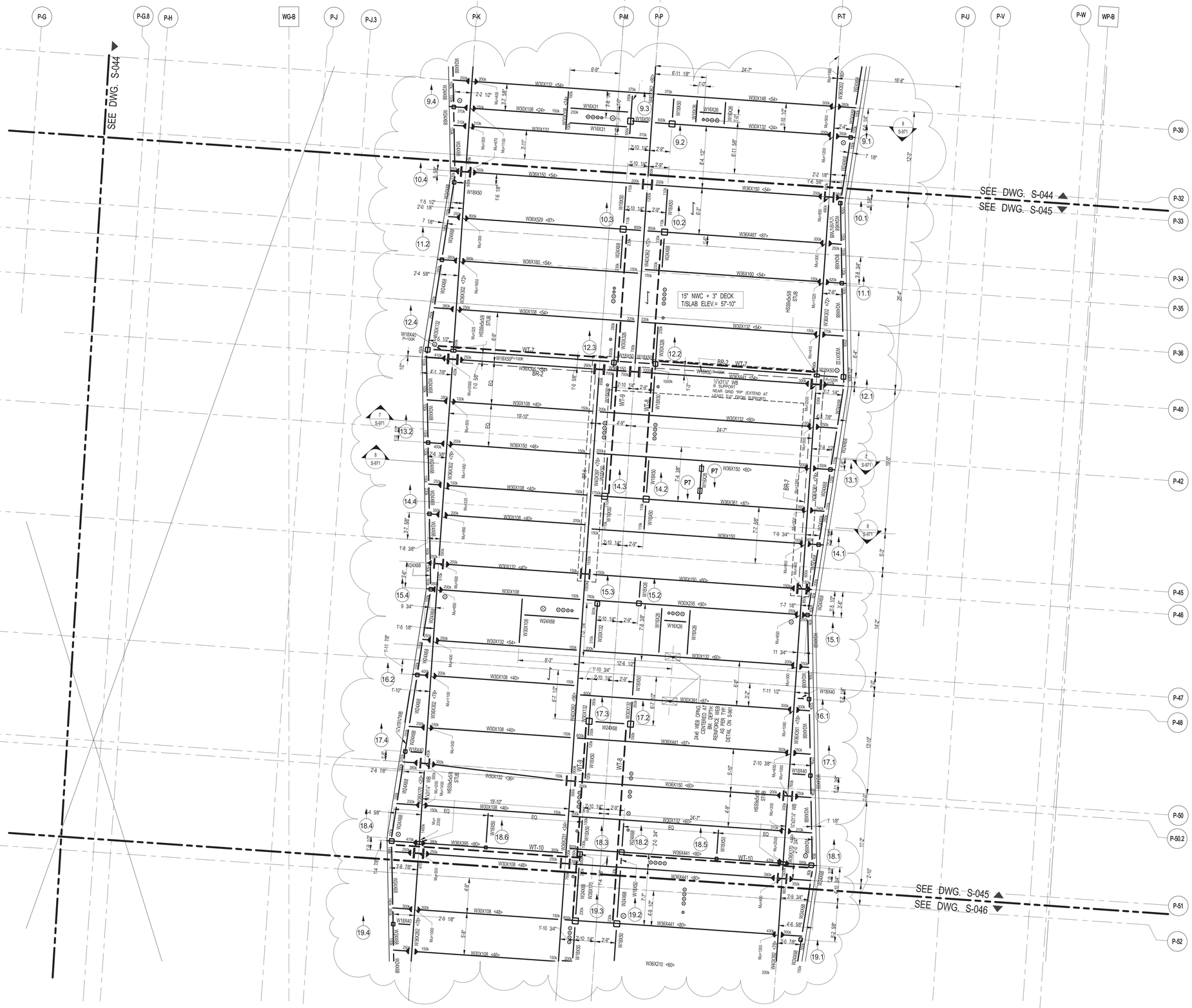

1 S-045 4TH FLOOR FRAMING PLAN - PART 5

SCALE: 3/16" = 1'-0"

NOTES:

1. FOR BALANCE OF INFORMATION SEE CORRESPONDING OVERALL FRAMING PLAN.
2. SEE TYPICAL DETAIL ON S-962 FOR SHEAR WALL POSTS / INTERIOR BEARING WALL.
3. FOR LOCATIONS OF SHEARWALL POSTS / BEARING WALL POSTS REFER TO S-201 THRU S-204 BY SPECIALTY ENGINEERS.(DATED 01.30.2015)
4. W-BEAM TOP & BOTTOM FLANGE TO BE CUT 6" WIDE.

KEY PLAN:

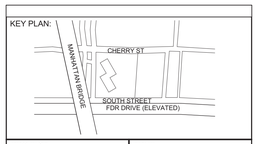

PROJECT NORTH

TRUE NORTH

DEVELOPER:
EXTELL DEVELOPMENT COMPANY
805 Third Ave, 7th Floor
New York, NY 10022
TEL: 212-712-6000 FAX: 212-712-6100

ARCHITECT OF RECORD:
AAI ARCHITECTS, P.C.
14 Wall Street, 2nd Floor
New York, NY 10005
TEL: 212-964-4040 FAX: 212-964-4090

INTERIOR DESIGNER:
MEYER DAVIS
180 Varick St, suite 404
New York, NY 10014
TEL: 212-627-5574

LANDSCAPE DESIGNER:
WEST 8 URBAN DESIGN & LANDSCAPE ARCHITECTURE P.C.
333 Hudson Street, Suite 905
New York, NY 10013
TEL: 212-285-0088 FAX: 212-285-0228

STRUCTURAL ENGINEERS:
WSP
228 East 45th Street
New York, NY 10017
TEL: 212-687-9888 FAX: 646-487-5501

MEP ENGINEERS:
ICOR ASSOCIATES, LLC
485 C Route 1 South, Suite 200
Iseline, NJ 08830
TEL: 908-272-3300 FAX: 908-272-4440

GEOTECHNICAL ENGINEERS:
LANGAN ENGINEERING & ENVIRONMENTAL SERVICES
21 Penn Plaza - 360 West 31st Street, 8th Floor
New York, NY 10001
TEL: 212.479.5400 FAX: 212.479.5444

No.	DESCRIPTION:	DATE:
1	STEEL BID PACKAGE	02-24-15
2	ADDENDUM #3	03-27-15
3	50% CONSTRUCTION DOCUMENTS	04-08-15
4	ADDENDUM #4	04-24-15
5	ADDENDUM #5	05-01-15
6	ADDENDUM #10	07-20-15
7	ISSUED FOR FILING	07-28-15
8	ADDENDUM #14	10-22-15
9	90% CONSTRUCTION DOCUMENTS	01-15-16
10	ASI #56	02-19-16
11	ASI #58	03-04-16
12	ISSUED FOR FILING	03-07-16

Discrepancies must be reported immediately to the Architect before proceeding. Only figured dimensions are to be used. Contractors must check all dimensions on site. This drawing is protected by copyright.

ALL DIMENSIONS ARE SHOWN IN IMPERIAL.

CONSULTANT:
WSP

PROJECT:
252 SOUTH STREET
NEW YORK, NY

DRAWING TITLE:
4TH FLOOR FRAMING PLAN - PART 5

SEAL & SIGNATURE:
STATE OF NEW YORK
AHMAD RAHIMIAN
No. 065537
LICENSED PROFESSIONAL ENGINEER

DATE:	02/20/15
PROJECT No:	1302510
DRAWN: CAD	REV:
CHK: CL	
SCALE: As indicated	
DWG No:	S-045.02
DOB PAGE No:	of

DOB EMPLOYEE STAMP:
Damian Titus
Buildings
APPROVED
Under Directive 2 of 1975
AMENDED APPLICATION
Date: 04/11/2016
NYC Development Hub

DOB B-SCAN:

30" x 42" Arch E1 - SHEET SIZE

FILE NAME:
PLOT DATE:

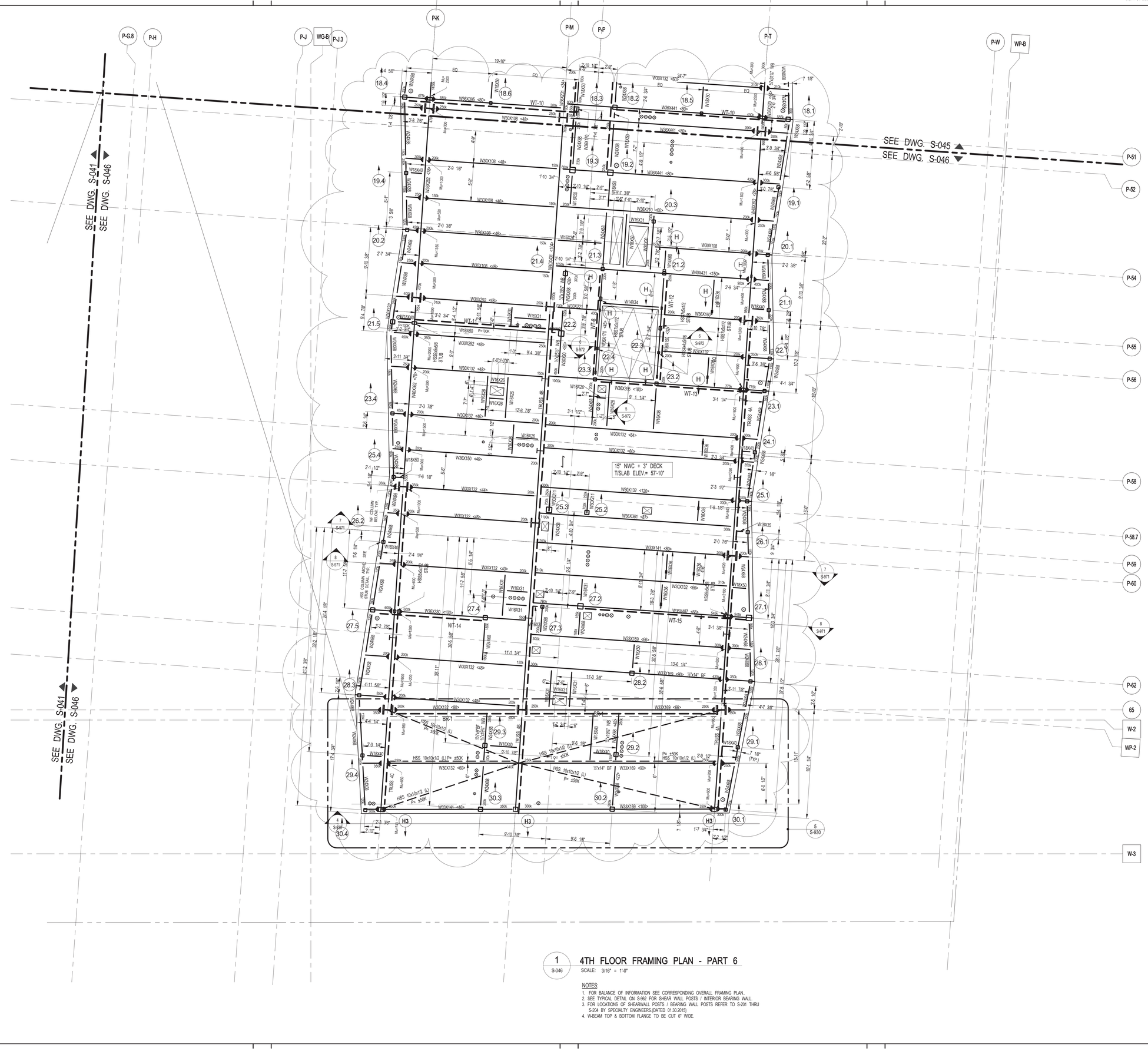

1 S-046 4TH FLOOR FRAMING PLAN - PART 6

SCALE: 3/16" = 1'-0"

NOTES:

1. FOR BALANCE OF INFORMATION SEE CORRESPONDING OVERALL FRAMING PLAN.
2. SEE TYPICAL DETAIL ON S-962 FOR SHEAR WALL POSTS / INTERIOR BEARING WALL.
3. FOR LOCATIONS OF SHEARWALL POSTS / BEARING WALL POSTS REFER TO S-201 THRU S-204 BY SPECIALTY ENGINEERS.(DATED 01.30.2015)
4. W-BEAM TOP & BOTTOM FLANGE TO BE CUT 6" WIDE.

KEY PLAN:

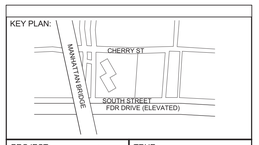

PROJECT NORTH

TRUE NORTH

DEVELOPER:
EXTELL DEVELOPMENT COMPANY
805 Third Ave, 7th Floor
New York, NY 10022
TEL: 212-712-6000 FAX: 212-712-6100

ARCHITECT OF RECORD:
AAI ARCHITECTS, P.C.
14 Wall Street, 2nd Floor
New York, NY 10005
TEL: 212-964-4040 FAX: 212-964-4090

INTERIOR DESIGNER:
MEYER DAVIS
180 Varick St, suite 404
New York, NY 10014
TEL: 212-627-5574

LANDSCAPE DESIGNER:
WEST 8 URBAN DESIGN & LANDSCAPE ARCHITECTURE P.C.
333 Hudson Street, Suite 905
New York, NY 10013
TEL: 212-285-0088 FAX: 212-285-0228

STRUCTURAL ENGINEERS:
WSP
228 East 45th Street
New York, NY 10017
TEL: 212-687-9888 FAX: 646-487-5501

MEP ENGINEERS:
ICOR ASSOCIATES, LLC
485 C Route 1 South, Suite 200
Iseline, NJ 08830
TEL: 908-272-3300 FAX: 908-272-4440

GEOTECHNICAL ENGINEERS:
LANGAN ENGINEERING & ENVIRONMENTAL SERVICES
21 Penn Plaza - 360 West 31st Street, 8th Floor
New York, NY 10001
TEL: 212.479.5400 FAX: 212.479.5444

No.	DESCRIPTION:	DATE:
1	STEEL BID PACKAGE	02-24-15
2	ADDENDUM #3	03-27-15
3	50% CONSTRUCTION DOCUMENTS	04-08-15
4	ADDENDUM #4	04-24-15
5	ADDENDUM #5	05-01-15
6	ADDENDUM #10	07-20-15
7	ISSUED FOR FILING	07-28-15
8	ADDENDUM #14	10-22-15
9	90% CONSTRUCTION DOCUMENTS	01-15-16
10	ASI #56	02-19-16
11	ASI #57	02-26-16
12	ASI #58	03-04-16
13	ISSUED FOR FILING	03-07-16

Discrepancies must be reported immediately to the Architect before proceeding. Only figured dimensions are to be used. Contractors must check all dimensions on site. This drawing is protected by copyright.

ALL DIMENSIONS ARE SHOWN IN IMPERIAL.

CONSULTANT:
WSP

PROJECT:
252 SOUTH STREET
NEW YORK, NY

DRAWING TITLE:
4TH FLOOR FRAMING PLAN - PART 6

SEAL & SIGNATURE:
STATE OF NEW YORK
AHMAD RAHIMIAN
No. 065537
LICENSED PROFESSIONAL ENGINEER

DATE:	02/20/15
PROJECT No:	1302510
DRAWN: CAD	REV:
CHK: CL	
SCALE: As indicated	
DWG No:	S-046.02
DOB PAGE No:	of

DOB EMPLOYEE STAMP:
Damian Titus
Buildings
APPROVED
Under Directive 2 of 1975
AMENDED APPLICATION
Date: 04/11/2016
NYC Development Hub

DOB B-SCAN:

DEPT OF BLDGS 121185528 Job Number
ES972000321 Scan Code

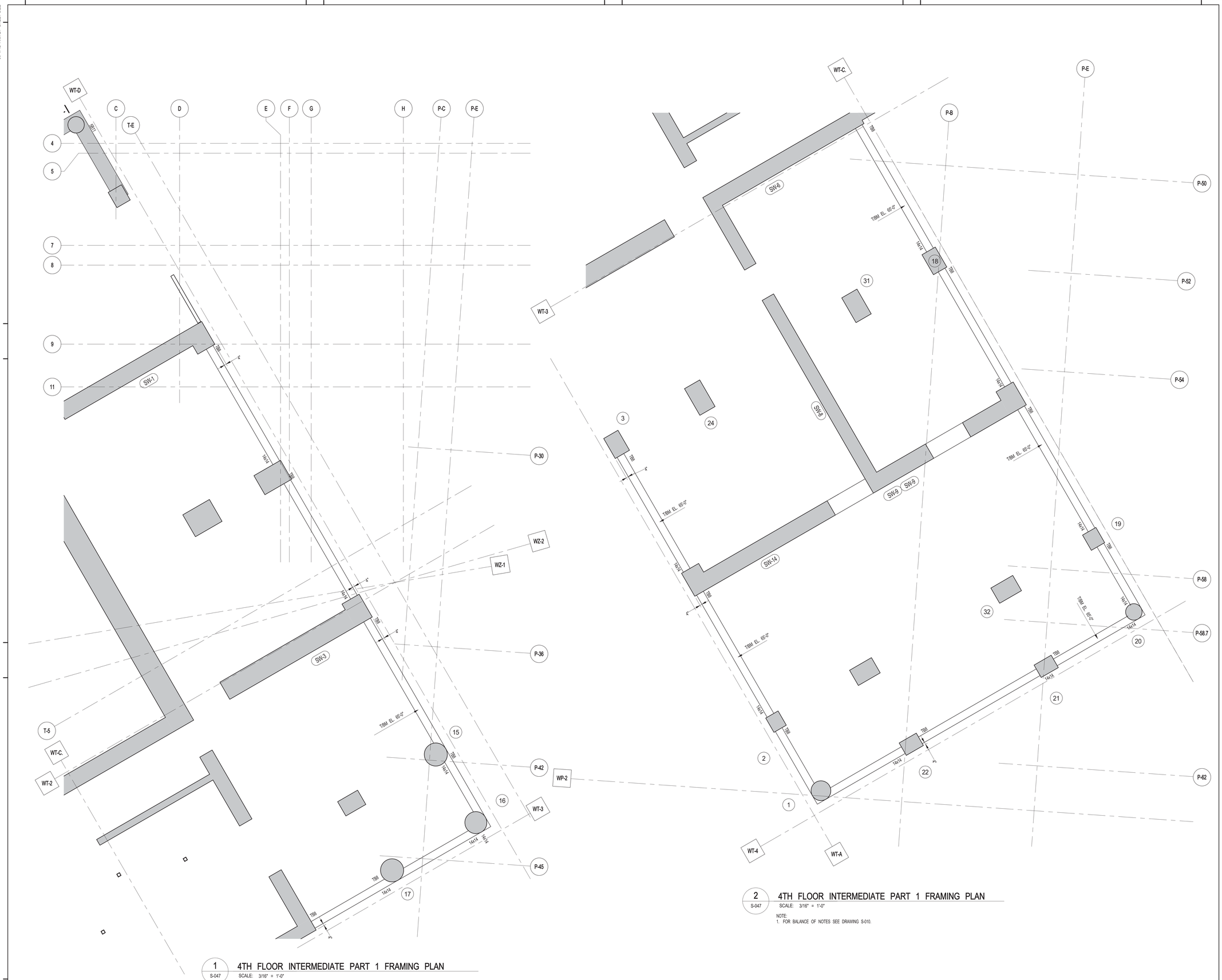

1 S-047 4TH FLOOR INTERMEDIATE PART 1 FRAMING PLAN
SCALE: 3/16" = 1'-0"
NOTE:
1. FOR BALANCE OF NOTES SEE DRAWING S-010.

2 S-047 4TH FLOOR INTERMEDIATE PART 1 FRAMING PLAN
SCALE: 3/16" = 1'-0"
NOTE:
1. FOR BALANCE OF NOTES SEE DRAWING S-010.

KEY PLAN:

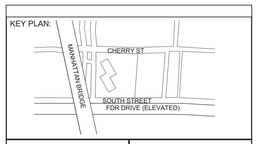

PROJECT NORTH
TRUE NORTH

DEVELOPER:
EXTELL DEVELOPMENT COMPANY
805 Third Ave, 7th Floor
New York, NY 10022
TEL: 212-712-6000 FAX: 212-712-6100

ARCHITECT OF RECORD:
AAI ARCHITECTS, P.C.
14 Wall Street, 2nd Floor
New York, NY 10005
TEL: 212-964-4040 FAX: 212-964-4090

INTERIOR DESIGNER:
MEYER DAVIS
180 Varick St, suite 404
New York, NY 10014
TEL: 212-627-5574

LANDSCAPE DESIGNER:
WEST 8 URBAN DESIGN & LANDSCAPE ARCHITECTURE P.C.
333 Hudson Street, Suite 905
New York, NY 10013
TEL: 212-285-0088 FAX: 212-285-0228

STRUCTURAL ENGINEERS:
WSP
228 East 45th Street
New York, NY 10017
TEL: 212-687-9888 FAX: 646-487-5501

MEP ENGINEERS:
ICOR ASSOCIATES, LLC
485 C Route 1 South, Suite 200
Iseline, NJ 08830
TEL: 908-272-3300 FAX: 908-272-4440

GEOTECHNICAL ENGINEERS:
LANGAN ENGINEERING & ENVIRONMENTAL SERVICES
21 Penn Plaza - 360 West 31st Street, 8th Floor
New York, NY 10001
TEL: 212.479.5400 FAX: 212.479.5444

No.	DESCRIPTION:	DATE:
1	90% CONSTRUCTION DOCUMENTS	01-15-16
2	ISSUED FOR FILING	03-07-16

Discrepancies must be reported immediately to the Architect before proceeding. Only figured dimensions are to be used. Contractors must check all dimensions on site. This drawing is protected by copyright.

ALL DIMENSIONS ARE SHOWN IN IMPERIAL.

CONSULTANT:
WSP

PROJECT:
252 SOUTH STREET
NEW YORK, NY

DRAWING TITLE:
4TH INTERMEDIATE FRAMING PART PLANS

SEAL & SIGNATURE:
STATE OF NEW YORK
AHMAD RAHIMIAN
No. 065537
LICENSED PROFESSIONAL ENGINEER

DATE:	12/10/15
PROJECT No:	1302510
DRAWN: CAD	REV:
CHK: CL	
SCALE: 3/16" = 1'-0"	
DWG No:	S-047.00
DOB PAGE No:	of

DOB EMPLOYEE STAMP:
Damian Titus
Buildings
APPROVED
Under Directive 2 of 1975
AMENDED APPLICATION
Date: 04/11/2016
NYC Development Hub

DOB B-SCAN:

30" x 42" Arch E1 - SHEET SIZE
FILE NAME:
PLOT DATE:

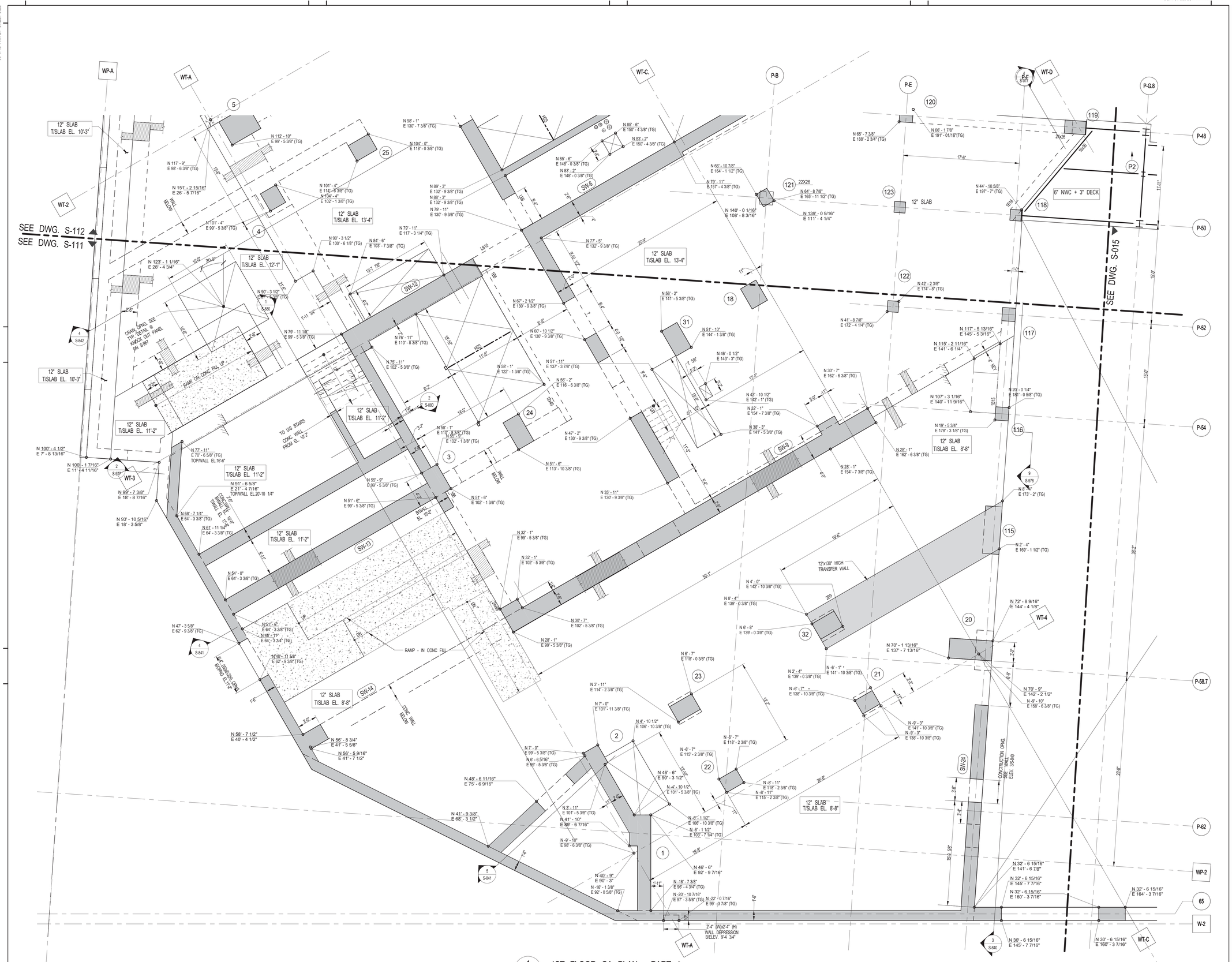

1 S-111 1ST FLOOR GA PLAN - PART 1

SCALE: 3/16" = 1'-0"

NOTES:

1. FOR BALANCE OF INFORMATION SEE CORRESPONDING OVERALL FRAMING PLAN

KEY PLAN:

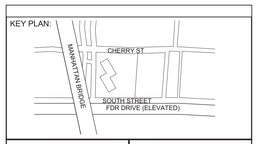

PROJECT NORTH

TRUE NORTH

DEVELOPER:
EXTELL DEVELOPMENT COMPANY
805 Third Ave, 7th Floor
New York, NY 10022
TEL: 212-712-6000 FAX: 212-712-6100

ARCHITECT OF RECORD:
AAI ARCHITECTS, P.C.
14 Wall Street, 2nd Floor
New York, NY 10005
TEL: 212-964-4040 FAX: 212-964-4090

INTERIOR DESIGNER:
MEYER DAVIS
180 Varick St, suite 404
New York, NY 10014
TEL: 212-627-5574

LANDSCAPE DESIGNER:
WEST 8 URBAN DESIGN & LANDSCAPE ARCHITECTURE P.C.
333 Hudson Street, Suite 905
New York, NY 10013
TEL: 212-285-0088 FAX: 212-285-0228

STRUCTURAL ENGINEERS:
WSP
228 East 45th Street
New York, NY 10017
TEL: 212-687-9888 FAX: 646-487-5501

MEP ENGINEERS:
ICOR ASSOCIATES, LLC
485 C Route 1 South, Suite 200
Iseline, NJ 08830
TEL: 908-272-3300 FAX: 908-272-4440

GEOTECHNICAL ENGINEERS:
LANGAN ENGINEERING & ENVIRONMENTAL SERVICES
21 Penn Plaza - 360 West 31st Street, 8th Floor
New York, NY 10001
TEL: 212.479.5400 FAX: 212.479.5444

No.	DESCRIPTION:	DATE:
1	ADDENDUM #14	10-22-15
2	ADDENDUM #15	11-18-15
3	90% CONSTRUCTION DOCUMENTS	01-15-16
4	ADDENDUM #16	02-04-16
5	ASI #56	02-19-16
6	ASI #58	03-04-16
7	ISSUED FOR FILING	03-07-16

Discrepancies must be reported immediately to the Architect before proceeding. Only figured dimensions are to be used. Contractors must check all dimensions on site. This drawing is protected by copyright.

ALL DIMENSIONS ARE SHOWN IN IMPERIAL.

CONSULTANT:
WSP

PROJECT:
252 SOUTH STREET
NEW YORK, NY

DRAWING TITLE:
1ST FLOOR GA PLAN - PART 1

SEAL & SIGNATURE:
STATE OF NEW YORK AHMAD RAHIMIAN No. 065537 LICENSED PROFESSIONAL ENGINEER

DATE:	10/08/15
PROJECT No:	1302510
DRAWN: CAD	REV:
CHK: CL	
SCALE: As indicated	
DWG No:	S-111.00
DOB PAGE No:	of

DOB EMPLOYEE STAMP:
Damian Titus
Buildings
APPROVED
Under Directive 2 of 1975
AMENDED APPLICATION
Date: 04/11/2016
NYC Development Hub

DOB B-SCAN:

DEPT OF BLDGS 121185058 Job Number
E-589934460173 Scan Code
30" x 42" Arch E1 - SHEET SIZE

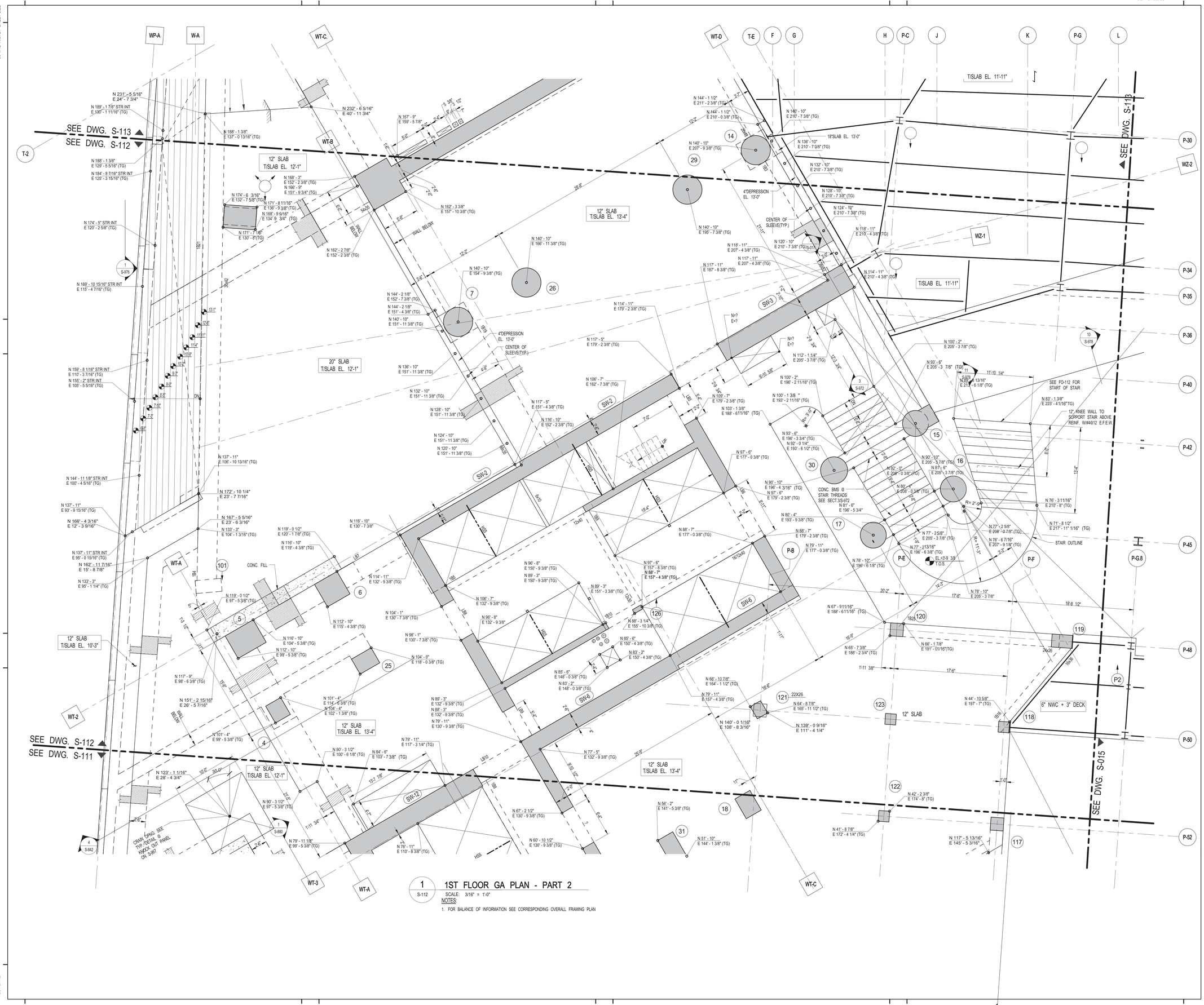

1 S-112 **1ST FLOOR GA PLAN - PART 2**

SCALE: 3/16" = 1'-0"

NOTES:

1. FOR BALANCE OF INFORMATION SEE CORRESPONDING OVERALL FRAMING PLAN

KEY PLAN:

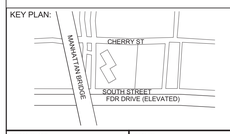

PROJECT NORTH | TRUE NORTH

DEVELOPER:
EXTELL DEVELOPMENT COMPANY
805 Third Ave, 7th Floor
New York, NY 10022
TEL: 212-712-6000 FAX: 212-712-6100

ARCHITECT OF RECORD:
AAI ARCHITECTS, P.C.
14 Wall Street, 2nd Floor
New York, NY 10005
TEL: 212-964-4040 FAX: 212-964-4090

INTERIOR DESIGNER:
MEYER DAVIS
180 Varick St, suite 404
New York, NY 10014
TEL: 212-627-5574

LANDSCAPE DESIGNER:
WEST 8 URBAN DESIGN & LANDSCAPE ARCHITECTURE P.C.
333 Hudson Street, Suite 905
New York, NY 10013
TEL: 212-285-0088 FAX: 212-285-0228

STRUCTURAL ENGINEERS:
WSP
228 East 45th Street
New York, NY 10017
TEL: 212-687-9888 FAX: 646-487-5501

MEP ENGINEERS:
ICOR ASSOCIATES, LLC
485 C Route 1 South, Suite 200
Iseline, NJ 08830
TEL: 908-272-3300 FAX: 908-272-4440

GEOTECHNICAL ENGINEERS:
LANGAN ENGINEERING & ENVIRONMENTAL SERVICES
21 Penn Plaza - 360 West 31st Street, 8th Floor
New York, NY 10001
TEL: 212.479.5400 FAX: 212.479.5444

No.	DESCRIPTION:	DATE:
1	ADDENDUM #14	10-22-15
2	ADDENDUM #15	11-18-15
3	90% CONSTRUCTION DOCUMENTS	01-15-16
4	ADDENDUM #16	02-04-16
5	ASI #56	02-19-16
6	ASI #58	03-04-16
7	ISSUED FOR FILING	03-07-16

Discrepancies must be reported immediately to the Architect before proceeding. Only figured dimensions are to be used. Contractors must check all dimensions on site. This drawing is protected by copyright.

ALL DIMENSIONS ARE SHOWN IN IMPERIAL.

CONSULTANT:
WSP

PROJECT:
252 SOUTH STREET
NEW YORK, NY

DRAWING TITLE:
1ST FLOOR GA PLAN - PART 2

SEAL & SIGNATURE:
STATE OF NEW YORK AHMAD RAHIMIAN No. 065552 LICENSED PROFESSIONAL ENGINEER

DATE: 10/09/15
PROJECT No: 1302510
DRAWN: CAD REV:
CHK: CL
SCALE: As indicated
DWG No: **S-112.00**
DOB PAGE No: of

DOB EMPLOYEE STAMP:
Damian Titus
NYC Buildings
APPROVED
Under Directive 2 of 1975
AMENDED APPLICATION
Date: 04/11/2016
NYC Development Hub

DOB B-SCAN:

FILE NAME:
PLOT DATE:

DEPT OF BLDGS121185539 Job Number
E350085966M Scan Code

30" x 42" Arch E1 - SHEET SIZE

1 S-113 — 1ST FLOOR GA PLAN - PART3
SCALE: 3/16" = 1'-0"

NOTES:
1. FOR BALANCE OF INFORMATION SEE CORRESPONDING OVERALL FRAMING PLAN

KEY PLAN:

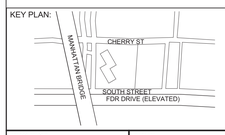

PROJECT NORTH

TRUE NORTH

DEVELOPER:
EXTELL DEVELOPMENT COMPANY
805 Third Ave, 7th Floor
New York, NY 10022
TEL: 212-712-6000 FAX: 212-712-6100

ARCHITECT OF RECORD:
AAI ARCHITECTS, P.C.
14 Wall Street, 2nd Floor
New York, NY 10005
TEL: 212-964-4040 FAX: 212-964-4090

INTERIOR DESIGNER:
MEYER DAVIS
180 Varick St, suite 404
New York, NY 10014
TEL: 212-627-5574

LANDSCAPE DESIGNER:
WEST 8 URBAN DESIGN & LANDSCAPE ARCHITECTURE P.C.
333 Hudson Street, Suite 905
New York, NY 10013
TEL: 212-285-0088 FAX: 212-285-0228

STRUCTURAL ENGINEERS:
WSP
228 East 45th Street
New York, NY 10017
TEL: 212-687-9888 FAX: 646-487-5501

MEP ENGINEERS:
ICOR ASSOCIATES, LLC
485 C Route 1 South, Suite 200
Iseline, NJ 08830
TEL: 908-272-3300 FAX: 908-272-4440

GEOTECHNICAL ENGINEERS:
LANGAN ENGINEERING & ENVIRONMENTAL SERVICES
21 Penn Plaza - 360 West 31st Street, 8th Floor
New York, NY 10001
TEL: 212.479.5400 FAX: 212.479.5444

No.	DESCRIPTION:	DATE:
1	ADDENDUM #14	10-22-15
2	ADDENDUM #15	11-18-15
3	90% CONSTRUCTION DOCUMENTS	01-15-16
4	ASI #58	03-04-16
5	ISSUED FOR FILING	03-07-16

Discrepancies must be reported immediately to the Architect before proceeding. Only figured dimensions are to be used. Contractors must check all dimensions on site. This drawing is protected by copyright.

ALL DIMENSIONS ARE SHOWN IN IMPERIAL.

CONSULTANT:
WSP

PROJECT:
252 SOUTH STREET
NEW YORK, NY

DRAWING TITLE:
1ST FLOOR GA PLAN - PART3

SEAL & SIGNATURE:
STATE OF NEW YORK
AHMAD RAZZAQUNI
No. 085027
LICENSED PROFESSIONAL ENGINEER

DATE:	10/09/15
PROJECT No:	1302510
DRAWN: CAD	REV:
CHK: CL	
SCALE: As indicated	
DWG No:	**S-113.00**
DOB PAGE No:	of

DOB EMPLOYEE STAMP:
Damian Titus
Buildings
APPROVED
Under Directive 2 of 1975
AMENDED APPLICATION
Date: 04/11/2016
NYC Development Hub

DOB B-SCAN:

FILE NAME:
PLOT DATE:

DEPT OF BLDGS121185528 Job Number
ES#539199953 Scan Code
30" x 42" Arch E1 - SHEET SIZE

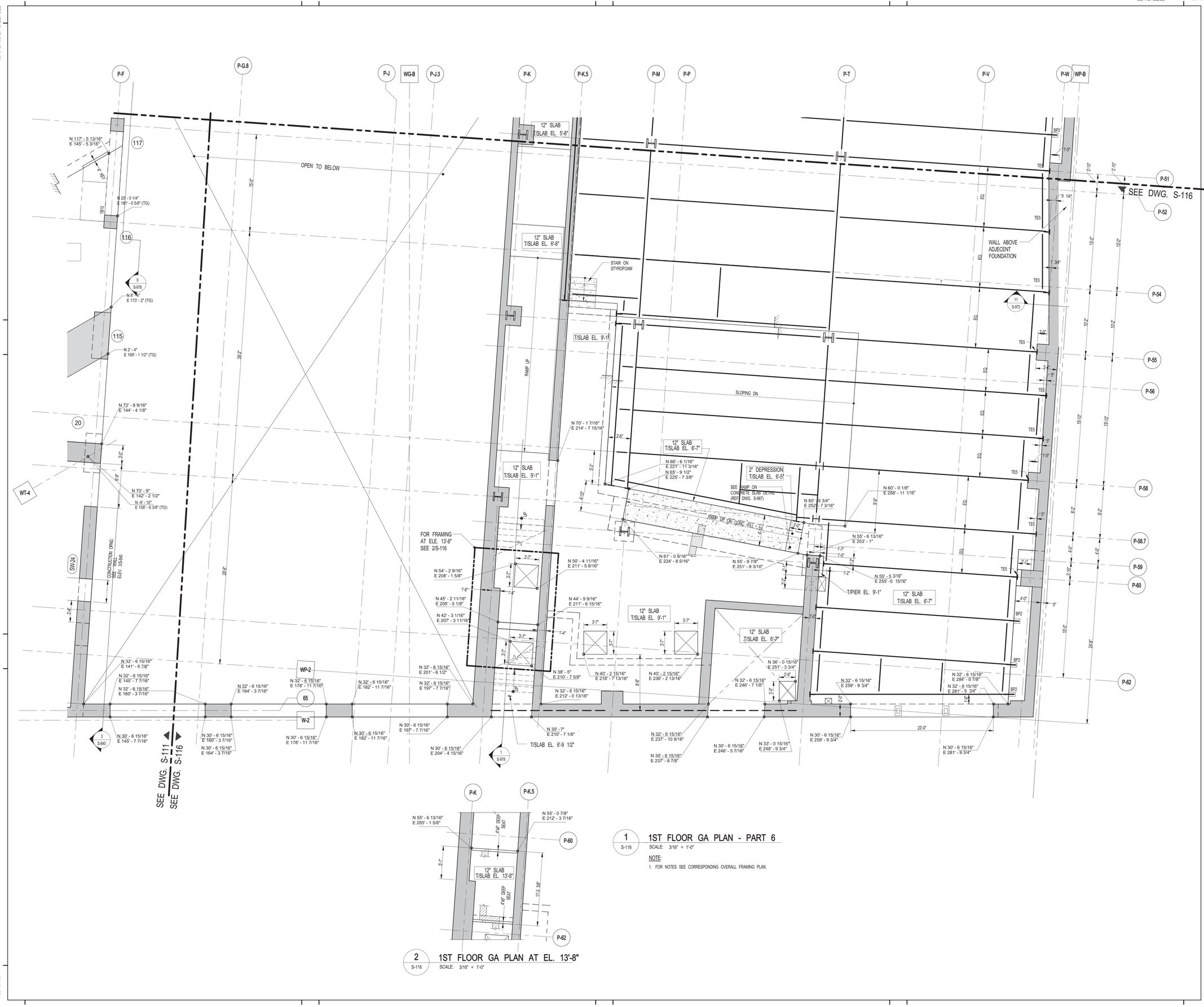

1 S-116 — **1ST FLOOR GA PLAN - PART 6**
SCALE: 3/16" = 1'-0"

NOTE:
1. FOR NOTES SEE CORRESPONDING OVERALL FRAMING PLAN.

2 S-116 — **1ST FLOOR GA PLAN AT EL. 13'-8"**
SCALE: 3/16" = 1'-0"

KEY PLAN:

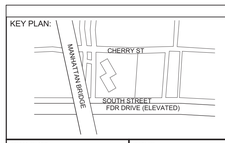

PROJECT NORTH | TRUE NORTH

DEVELOPER:
EXTELL DEVELOPMENT COMPANY
805 Third Ave, 7th Floor
New York, NY 10022
TEL: 212-712-6000 FAX: 212-712-6100

ARCHITECT OF RECORD:
AAI ARCHITECTS, P.C.
14 Wall Street, 2nd Floor
New York, NY 10005
TEL: 212-964-4040 FAX: 212-964-4090

INTERIOR DESIGNER:
MEYER DAVIS
180 Varick St, suite 404
New York, NY 10014
TEL: 212-627-5574

LANDSCAPE DESIGNER:
WEST 8 URBAN DESIGN & LANDSCAPE ARCHITECTURE P.C.
333 Hudson Street, Suite 905
New York, NY 10013
TEL: 212-285-0088 FAX: 212-285-0228

STRUCTURAL ENGINEERS:
WSP
228 East 45th Street
New York, NY 10017
TEL: 212-687-9888 FAX: 646-487-5501

MEP ENGINEERS:
ICOR ASSOCIATES, LLC
485 C Route 1 South, Suite 200
Iseline, NJ 08830
TEL: 908-272-3300 FAX: 908-272-4440

GEOTECHNICAL ENGINEERS:
LANGAN ENGINEERING & ENVIRONMENTAL SERVICES
21 Penn Plaza - 360 West 31st Street, 8th Floor
New York, NY 10001
TEL: 212.479.5400 FAX: 212.479.5444

No.	DESCRIPTION:	DATE:
1	ADDENDUM #14	10-22-15
2	ADDENDUM #16	02-04-16
3	ASI #58	03-04-16
4	ISSUED FOR FILING	03-07-16

Discrepancies must be reported immediately to the Architect before proceeding. Only figured dimensions are to be used. Contractors must check all dimensions on site. This drawing is protected by copyright.

ALL DIMENSIONS ARE SHOWN IN IMPERIAL.

CONSULTANT: WSP

PROJECT:
252 SOUTH STREET
NEW YORK, NY

DRAWING TITLE:
1ST FLOOR GA PLAN - PART 6

SEAL & SIGNATURE:
STATE OF NEW YORK · AHMAD RAHIMIAN · No. 085527 · LICENSED PROFESSIONAL ENGINEER

DATE: 01/20/16
PROJECT No: 1302510
DRAWN: CAD REV:
CHK: CL
SCALE: As indicated
DWG No: **S-116.00**
DOB PAGE No: of

DOB EMPLOYEE STAMP:
Damian Titus
NYC Buildings
APPROVED
Under Directive 2 of 1975
AMENDED APPLICATION
Date: 04/11/2016
NYC Development Hub

DOB B-SCAN:

FILE NAME:
PLOT DATE:

DEPT OF BLDGS121185539 Job Number
E500889103B Scan Code
30" x 42" Arch E1 - SHEET SIZE

SEE DWG. S-122
SEE DWG. S-121

WT-A WT-C WT-3 WT-4

P-E P-F P-G.8 P-H P-50 P-50.2 P-52 P-54 P-58 P-58.7 P-62 WP-2 W-2 W-3

12" SLAB T/SLAB EL. 25'-8"

12" SLAB T/SLAB EL. 24'-2"

12" SLAB T/SLAB EL. 24'-2"

24" SLAB T/SLAB EL. 17'-8"

12" SLAB T/SLAB EL. 21'-2"

16" SLAB T/SLAB EL. 25'-8"

16" SLAB T/SLAB EL. 18'-6"

16" SLAB T/SLAB EL. 18'-6"

SW-5 SW-9 SW-12 SW-14 SW-24 SW-25A

CONTINUATION SEE S-011

WALL BELOW

1'-0" WALL

CONC. FILL

OPEN TO BELOW

OPEN TO BELOW

EDGE OF SLAB ABOVE

TOPWALL EL.24'-9 3/4"

TIPWALL EL.26'-0 1/4"

T/CONC. EL.27'-8"

12" SLAB SLOPE

8" THK. IN CONC. FILL

1'-0" WALL BEL.17'-5"

BOTT. OF WALL OPENING EL.24'-6"

TOP OF OPNG EL.25'-6"

P.RD. WALL BELOW

CANT

SEE FOR FRAMING@ EL.+18'-6" @ STAIR OPNG.

CONSTRUCTION OPNG. SLAB ELEV. 35'-840

8" KNEE WALL TO SLAB @ EL. 24'-2"

UP TURNED SLAB

BEL.

1 S-121 2ND FLOOR GA PLAN - PART 1
SCALE: 3/16" = 1'-0"

NOTES:
1. FOR BALANCE OF INFORMATION SEE CORRESPONDING OVERALL FRAMING PLAN

2 PART PLAN @ EL. 18'-6" @ STAIR
3/16" = 1'-0"

FILE NAME:
PLOT DATE:

KEY PLAN:
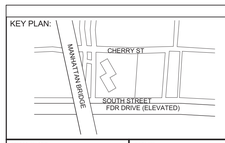

PROJECT NORTH | TRUE NORTH

DEVELOPER:
EXTELL DEVELOPMENT COMPANY
805 Third Ave, 7th Floor
New York, NY 10022
TEL: 212-712-6000 FAX: 212-712-6100

ARCHITECT OF RECORD:
AAI ARCHITECTS, P.C.
14 Wall Street, 2nd Floor
New York, NY 10005
TEL: 212-964-4040 FAX: 212-964-4090

INTERIOR DESIGNER:
MEYER DAVIS
180 Varick St, suite 404
New York, NY 10014
TEL: 212-627-5574

LANDSCAPE DESIGNER:
WEST 8 URBAN DESIGN & LANDSCAPE ARCHITECTURE P.C.
333 Hudson Street, Suite 905
New York, NY 10013
TEL: 212-285-0088 FAX: 212-285-0228

STRUCTURAL ENGINEERS:
WSP
228 East 45th Street
New York, NY 10017
TEL: 212-687-9888 FAX: 646-487-5501

MEP ENGINEERS:
ICOR ASSOCIATES, LLC
485 C Route 1 South, Suite 200
Iseline, NJ 08830
TEL: 908-272-3300 FAX: 908-272-4440

GEOTECHNICAL ENGINEERS:
LANGAN ENGINEERING & ENVIRONMENTAL SERVICES
21 Penn Plaza - 360 West 31st Street, 8th Floor
New York, NY 10001
TEL: 212.479.5400 FAX: 212.479.5444

No.	DESCRIPTION:	DATE:
1	ADDENDUM #14	10-22-15
2	ADDENDUM #15	11-18-15
3	90% CONSTRUCTION DOCUMENTS	01-15-16
4	ADDENDUM #16	02-04-16
5	ASI #55	02-12-16
6	ASI #56	02-19-16
7	ASI #57	02-26-16
8	ISSUED FOR FILING	03-07-16

Discrepancies must be reported immediately to the Architect before proceeding. Only figured dimensions are to be used. Contractors must check all dimensions on site. This drawing is protected by copyright.

ALL DIMENSIONS ARE SHOWN IN IMPERIAL.

CONSULTANT:
WSP

PROJECT:
252 SOUTH STREET
NEW YORK, NY

DRAWING TITLE:
2ND FLOOR GA PLAN - PART 1

SEAL & SIGNATURE:
STATE OF NEW YORK · AHMAD RAHIMIAN · No. 085057 · LICENSED PROFESSIONAL ENGINEER

DATE: 10/12/15
PROJECT No: 1302510
DRAWN: CAD REV:
CHK: CL
SCALE: As indicated
DWG No: **S-121.00**
DOB PAGE No: of

DOB EMPLOYEE STAMP:
Damian Titus
Buildings
APPROVED
Under Directive 2 of 1975
AMENDED APPLICATION
Date: 04/12/2016
NYC Development Hub

DOB B-SCAN:

DEPT OF BLDGS121185028 Job Number
ES1215359954 Scan Code
30" x 42" Arch E1 - SHEET SIZE

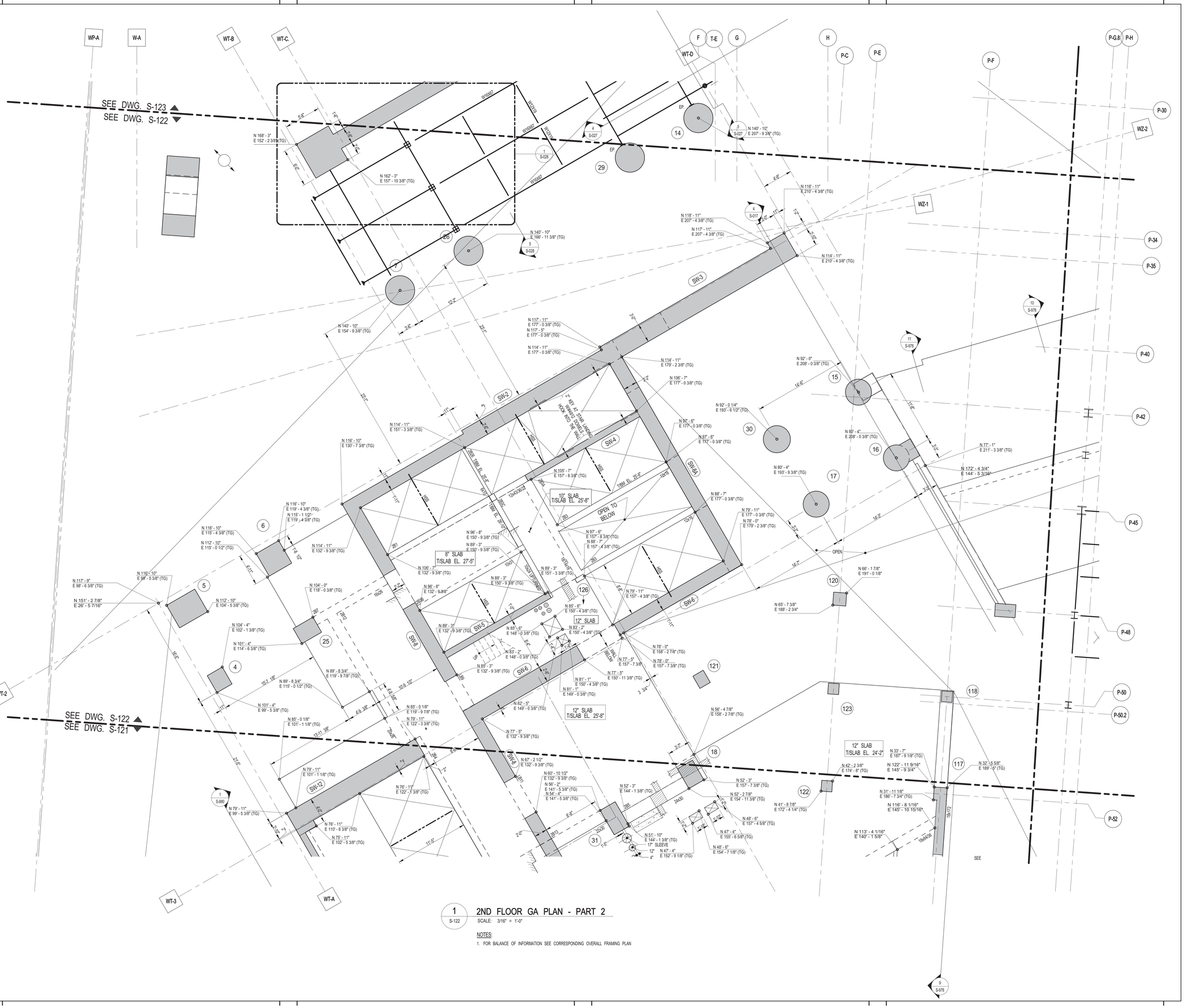

1 S-122 **2ND FLOOR GA PLAN - PART 2**
SCALE: 3/16" = 1'-0"

NOTES:
1. FOR BALANCE OF INFORMATION SEE CORRESPONDING OVERALL FRAMING PLAN

KEY PLAN:

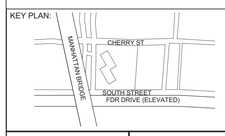

PROJECT NORTH | TRUE NORTH

DEVELOPER:
EXTELL DEVELOPMENT COMPANY
805 Third Ave, 7th Floor
New York, NY 10022
TEL: 212-712-6000 FAX: 212-712-6100

ARCHITECT OF RECORD:
AAI ARCHITECTS, P.C.
14 Wall Street, 2nd Floor
New York, NY 10005
TEL: 212-964-4040 FAX: 212-964-4090

INTERIOR DESIGNER:
MEYER DAVIS
180 Varick St, suite 404
New York, NY 10014
TEL: 212-627-5574

LANDSCAPE DESIGNER:
WEST 8 URBAN DESIGN & LANDSCAPE ARCHITECTURE P.C.
333 Hudson Street, Suite 905
New York, NY 10013
TEL: 212-285-0088 FAX: 212-285-0228

STRUCTURAL ENGINEERS:
WSP
228 East 45th Street
New York, NY 10017
TEL: 212-687-9888 FAX: 646-487-5501

MEP ENGINEERS:
ICOR ASSOCIATES, LLC
485 C Route 1 South, Suite 200
Iseline, NJ 08830
TEL: 908-272-3300 FAX: 908-272-4440

GEOTECHNICAL ENGINEERS:
LANGAN ENGINEERING & ENVIRONMENTAL SERVICES
21 Penn Plaza - 360 West 31st Street, 8th Floor
New York, NY 10001
TEL: 212.479.5400 FAX: 212.479.5444

No.	DESCRIPTION:	DATE:
1	ADDENDUM #14	10-22-15
2	ADDENDUM #15	11-18-15
3	90% CONSTRUCTION DOCUMENTS	01-15-16
4	ADDENDUM #16	02-04-16
5	ASI #56	02-19-16
6	ASI #57	02-26-16
7	ISSUED FOR FILING	03-07-16

Discrepancies must be reported immediately to the Architect before proceeding. Only figured dimensions are to be used. Contractors must check all dimensions on site. This drawing is protected by copyright.

ALL DIMENSIONS ARE SHOWN IN IMPERIAL.

CONSULTANT:
WSP

PROJECT:
252 SOUTH STREET
NEW YORK, NY

DRAWING TITLE:
2ND FLOOR GA PLAN - PART 2

SEAL & SIGNATURE:
STATE OF NEW YORK · AHMAD RAHIMIAN · No. 085527 · LICENSED PROFESSIONAL ENGINEER

DATE:	10/12/15
PROJECT No:	1302510
DRAWN: CAD	REV:
CHK: CL	
SCALE: As Indicated	
DWG No:	**S-122.00**
DOB PAGE No:	of

DOB EMPLOYEE STAMP:
Damian Titus
Buildings
APPROVED
Under Directive 2 of 1975
AMENDED APPLICATION
Date: 04/11/2016
NYC Development Hub

DOB B-SCAN:

FILE NAME:
PLOT DATE:

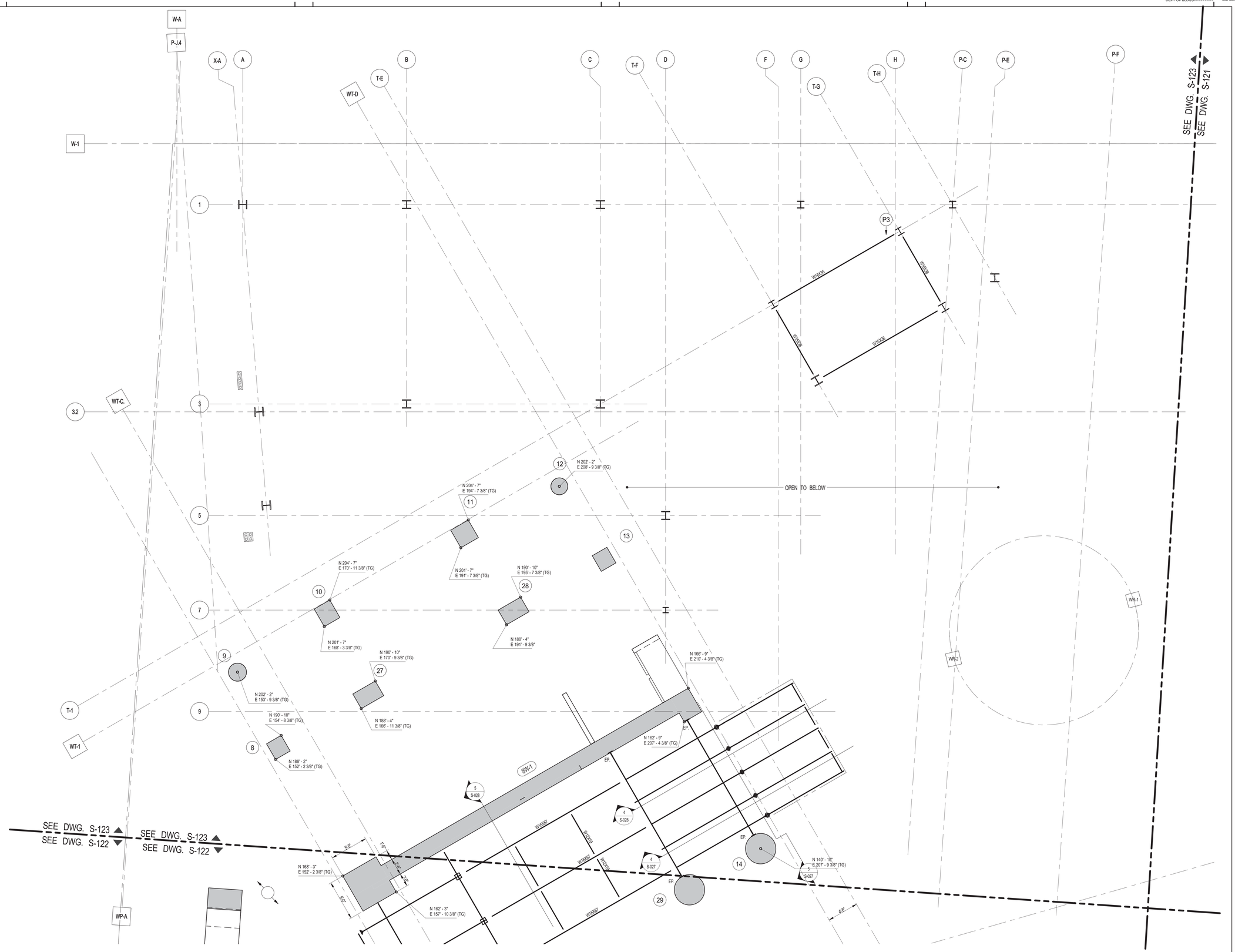

1 **2ND FLOOR GA PLAN - PLAN 3**

3/16" = 1'-0"

NOTES:

1. FOR BALANCE OF INFORMATION SEE CORRESPONDING OVERALL FRAMING PLAN

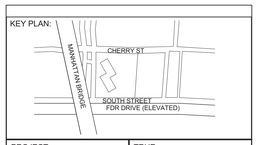

PROJECT NORTH

TRUE NORTH

DEVELOPER:
EXTELL DEVELOPMENT COMPANY
805 Third Ave, 7th Floor
New York, NY 10022
TEL: 212-712-6000 FAX: 212-712-6100

ARCHITECT OF RECORD:
AAI ARCHITECTS, P.C.
14 Wall Street, 2nd Floor
New York, NY 10005
TEL: 212-964-4040 FAX: 212-964-4090

INTERIOR DESIGNER:
MEYER DAVIS
180 Varick St, suite 404
New York, NY 10014
TEL: 212-627-5574

LANDSCAPE DESIGNER:
WEST 8 URBAN DESIGN & LANDSCAPE ARCHITECTURE P.C.
333 Hudson Street, Suite 905
New York, NY 10013
TEL: 212-285-0088 FAX: 212-285-0228

STRUCTURAL ENGINEERS:
WSP
228 East 45th Street
New York, NY 10017
TEL: 212-687-9888 FAX: 646-487-5501

MEP ENGINEERS:
ICOR ASSOCIATES, LLC
485 C Route 1 South, Suite 200
Iseline, NJ 08830
TEL: 908-272-3300 FAX: 908-272-4440

GEOTECHNICAL ENGINEERS:
LANGAN ENGINEERING & ENVIRONMENTAL SERVICES
21 Penn Plaza - 360 West 31st Street, 8th Floor
New York, NY 10001
TEL: 212.479.5400 FAX: 212.479.5444

No.	DESCRIPTION:	DATE:
1	ASI #58	03-04-16
2	ISSUED FOR FILING	03-07-16

Discrepancies must be reported immediately to the Architect before proceeding. Only figured dimensions are to be used. Contractors must check all dimensions on site. This drawing is protected by copyright.

ALL DIMENSIONS ARE SHOWN IN IMPERIAL.

CONSULTANT:
WSP

PROJECT:
252 SOUTH STREET
NEW YORK, NY

DRAWING TITLE:
2ND FLOOR GA PLAN - PART 3

SEAL & SIGNATURE:
STATE OF NEW YORK
AHMAD RAHIMIAN
No. 065537
LICENSED PROFESSIONAL ENGINEER

DATE:	12/28/15
PROJECT No:	1302510
DRAWN: CAD	REV:
CHK: CL	
SCALE: As indicated	
DWG No:	S-123.00
DOB PAGE No:	of

DOB EMPLOYEE STAMP:
Damian Titus
Buildings
APPROVED
Under Directive 2 of 1975
AMENDED APPLICATION
Date: 04/11/2016
NYC Development Hub

DOB B-SCAN:

30" x 42" Arch E1 - SHEET SIZE

FILE NAME:
PLOT DATE:

DEPT OF BLDGS121185539 Job Number
E-587-35069951 Scan Code
30" x 42" Arch E1 - SHEET SIZE

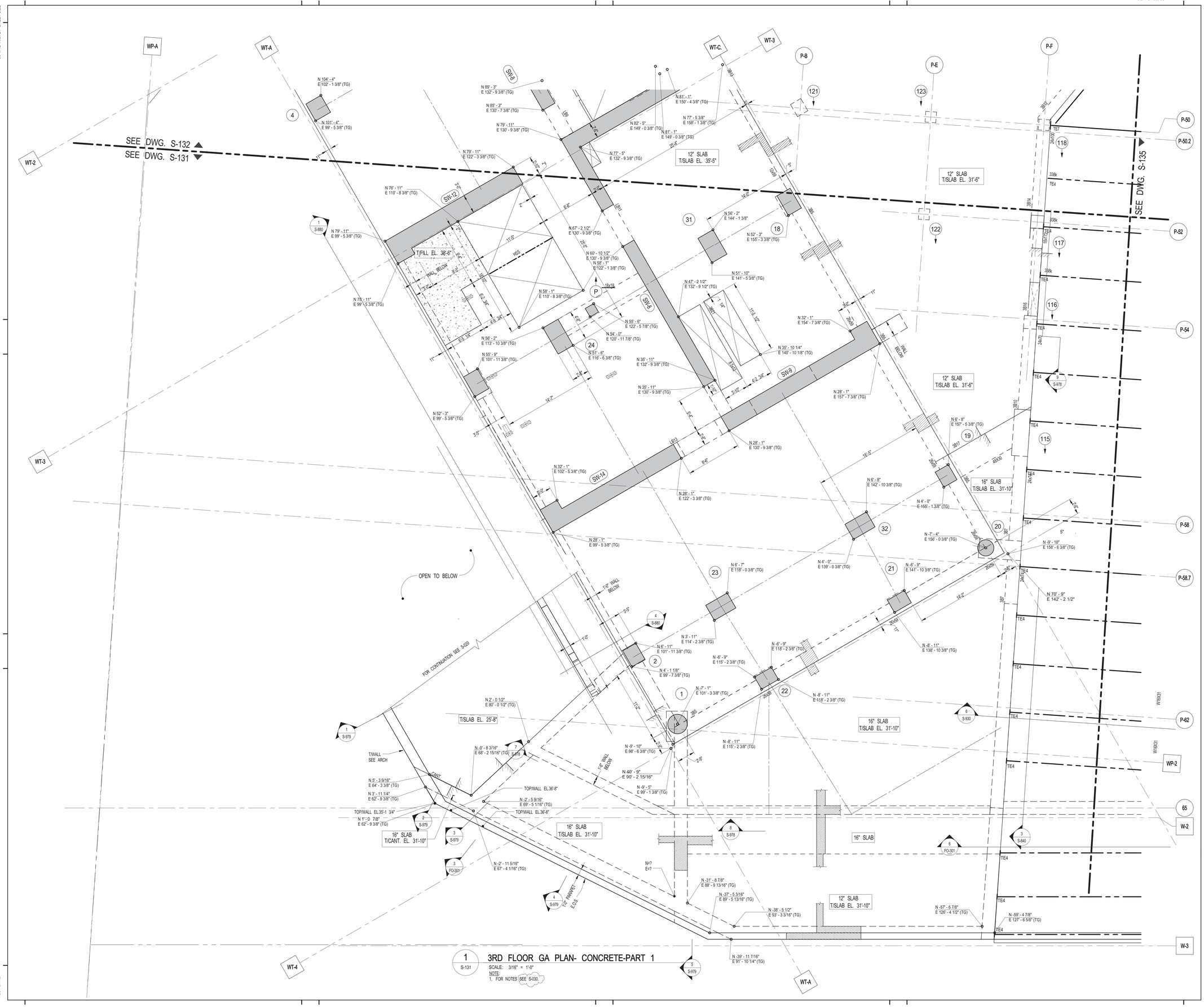

1 S-131 **3RD FLOOR GA PLAN- CONCRETE-PART 1**
SCALE: 3/16" = 1'-0"
NOTE:
1. FOR NOTES SEE S-030

KEY PLAN:

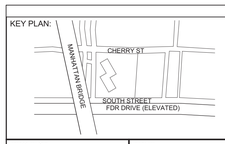

PROJECT NORTH | TRUE NORTH

DEVELOPER:
EXTELL DEVELOPMENT COMPANY
805 Third Ave, 7th Floor
New York, NY 10022
TEL: 212-712-6000 FAX: 212-712-6100

ARCHITECT OF RECORD:
AAI ARCHITECTS, P.C.
14 Wall Street, 2nd Floor
New York, NY 10005
TEL: 212-964-4040 FAX: 212-964-4090

INTERIOR DESIGNER:
MEYER DAVIS
180 Varick St, suite 404
New York, NY 10014
TEL: 212-627-5574

LANDSCAPE DESIGNER:
WEST 8 URBAN DESIGN & LANDSCAPE ARCHITECTURE P.C.
333 Hudson Street, Suite 905
New York, NY 10013
TEL: 212-285-0088 FAX: 212-285-0228

STRUCTURAL ENGINEERS:
WSP
228 East 45th Street
New York, NY 10017
TEL: 212-687-9888 FAX: 646-487-5501

MEP ENGINEERS:
ICOR ASSOCIATES, LLC
485 C Route 1 South, Suite 200
Iseline, NJ 08830
TEL: 908-272-3300 FAX: 908-272-4440

GEOTECHNICAL ENGINEERS:
LANGAN ENGINEERING & ENVIRONMENTAL SERVICES
21 Penn Plaza - 360 West 31st Street, 8th Floor
New York, NY 10001
TEL: 212.479.5400 FAX: 212.479.5444

No.	DESCRIPTION:	DATE:
1	90% CONSTRUCTION DOCUMENTS	01-15-16
2	ADDENDUM #16	02-04-16
3	ASI #56	02-19-16
4	ASI #58	03-04-16
5	ISSUED FOR FILING	03-07-16

Discrepancies must be reported immediately to the Architect before proceeding. Only figured dimensions are to be used. Contractors must check all dimensions on site. This drawing is protected by copyright.

ALL DIMENSIONS ARE SHOWN IN IMPERIAL.

CONSULTANT:
WSP

PROJECT:
252 SOUTH STREET
NEW YORK, NY

DRAWING TITLE:
3RD FLOOR GA
FLOOR-CONCRETE- PART 1

SEAL & SIGNATURE:
STATE OF NEW YORK · AHMAD RAHIMIAN · No. 095032 · LICENSED PROFESSIONAL ENGINEER

DATE: 10/27/15
PROJECT No: 1302510
DRAWN: CAD REV:
CHK: CL
SCALE: As indicated
DWG No: **S-131.00**
DOB PAGE No: of

DOB EMPLOYEE STAMP:
Damian Titus
NYC Buildings
APPROVED
Under Directive 2 of 1975
AMENDED APPLICATION
Date: 04/11/2016
NYC Development Hub

DOB B-SCAN:

FILE NAME:
PLOT DATE:

DEPT OF BLDGS 121185528 Job Number

ES105140095 Scan Code

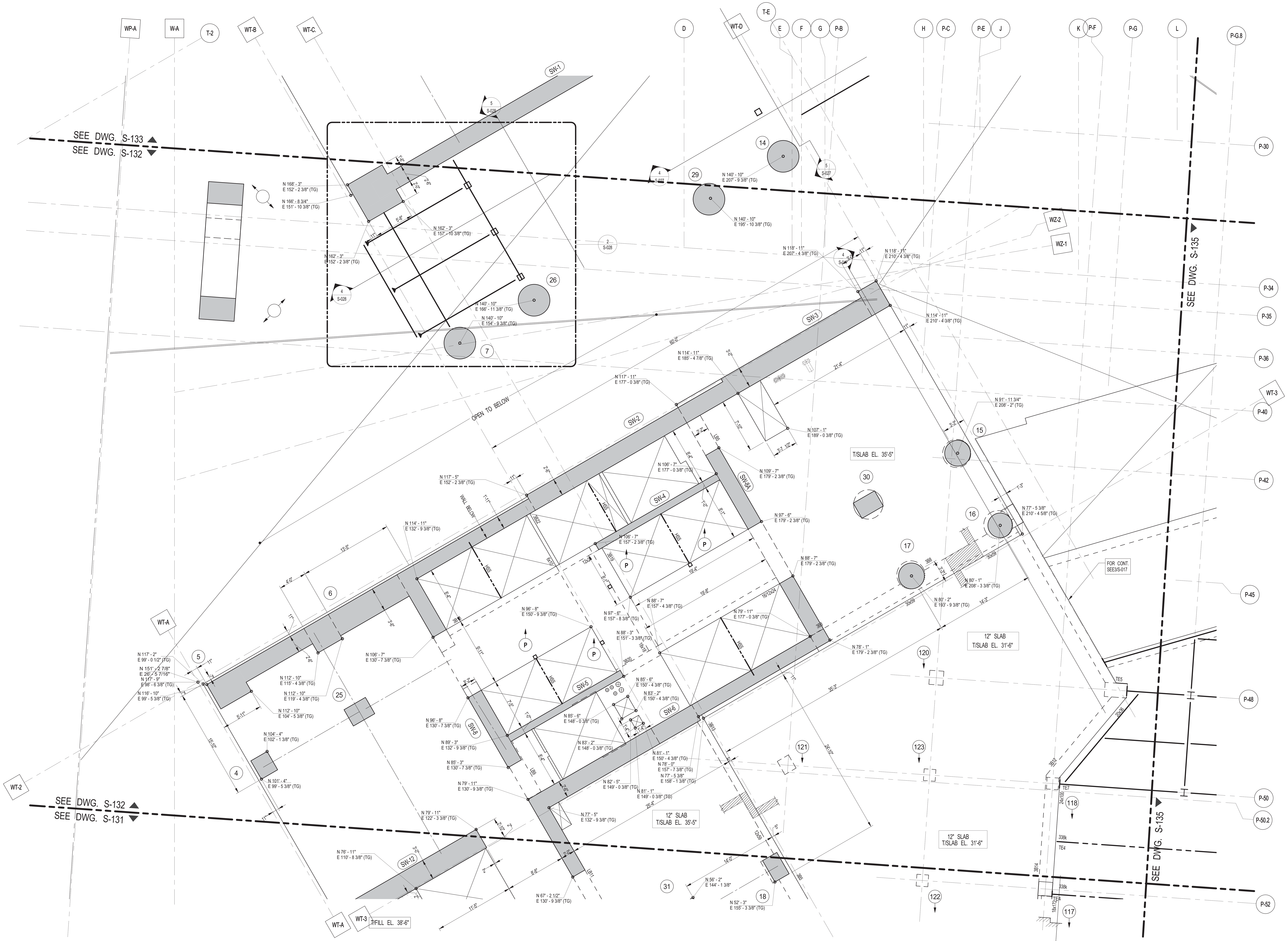

1 S-132 **3RD FLOOR GA PLAN- CONCRETE-PART 2**

SCALE: 3/16" = 1'-0"

NOTE:

1. FOR NOTES SEE CORRESPONDING OVERALL FRAMING PLAN.

KEY PLAN:

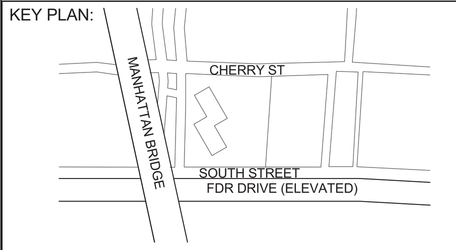

PROJECT NORTH

TRUE NORTH

DEVELOPER:
EXTELL DEVELOPMENT COMPANY
805 Third Ave, 7th Floor
New York, NY 10022
TEL: 212-712-6000 FAX: 212-712-6100

ARCHITECT OF RECORD:
AAI ARCHITECTS, P.C.
14 Wall Street, 2nd Floor
New York, NY 10005
TEL: 212-964-4040 FAX: 212-964-4090

INTERIOR DESIGNER:
MEYER DAVIS
180 Varick St, suite 404
New York, NY 10014
TEL: 212-627-5574

LANDSCAPE DESIGNER:
WEST 8 URBAN DESIGN & LANDSCAPE ARCHITECTURE P.C.
333 Hudson Street, Suite 905
New York, NY 10013
TEL: 212-285-0088 FAX: 212-285-0228

STRUCTURAL ENGINEERS:
WSP
228 East 45th Street
New York, NY 10017
TEL: 212-687-9888 FAX: 646-487-5501

MEP ENGINEERS:
ICOR ASSOCIATES, LLC
485 C Route 1 South, Suite 200
Iseline, NJ 08830
TEL: 908-272-3300 FAX: 908-272-4440

GEOTECHNICAL ENGINEERS:
LANGAN ENGINEERING & ENVIRONMENTAL SERVICES
21 Penn Plaza - 360 West 31st Street, 8th Floor
New York, NY 10001
TEL: 212.479.5400 FAX: 212.479.5444

No.	DESCRIPTION:	DATE:
1	90% CONSTRUCTION DOCUMENTS	01-15-16
2	ADDENDUM #16	02-04-16
3	ASI #56	02-19-16
4	ASI #57	02-26-16
5	ASI #58	03-04-16
6	ISSUED FOR FILING	03-07-16

Discrepancies must be reported immediately to the Architect before proceeding. Only figured dimensions are to be used. Contractors must check all dimensions on site. This drawing is protected by copyright.

ALL DIMENSIONS ARE SHOWN IN IMPERIAL.

CONSULTANT:

WSP

PROJECT:

252 SOUTH STREET
NEW YORK, NY

DRAWING TITLE:

3RD FLOOR GA
FLOOR-CONCRETE- PART 2

SEAL & SIGNATURE:

STATE OF NEW YORK · AHMAD RAHIMIAN · No. 065537 · LICENSED PROFESSIONAL ENGINEER

DATE:	10/27/15
PROJECT No:	1302510
DRAWN:	CAD
CHK:	CL
SCALE:	As indicated
REV:	
DWG No:	S-132.00
DOB PAGE No:	of

DOB EMPLOYEE STAMP:

Damian Titus
NYC Buildings
APPROVED
Under Directive 2 of 1975
AMENDED APPLICATION
Date: 04/11/2016
NYC Development Hub

DOB B-SCAN:

DEPT OF BLDGS121185528 Job Number
E5865432590 Scan Code

30" x 42" Arch E1 - SHEET SIZE

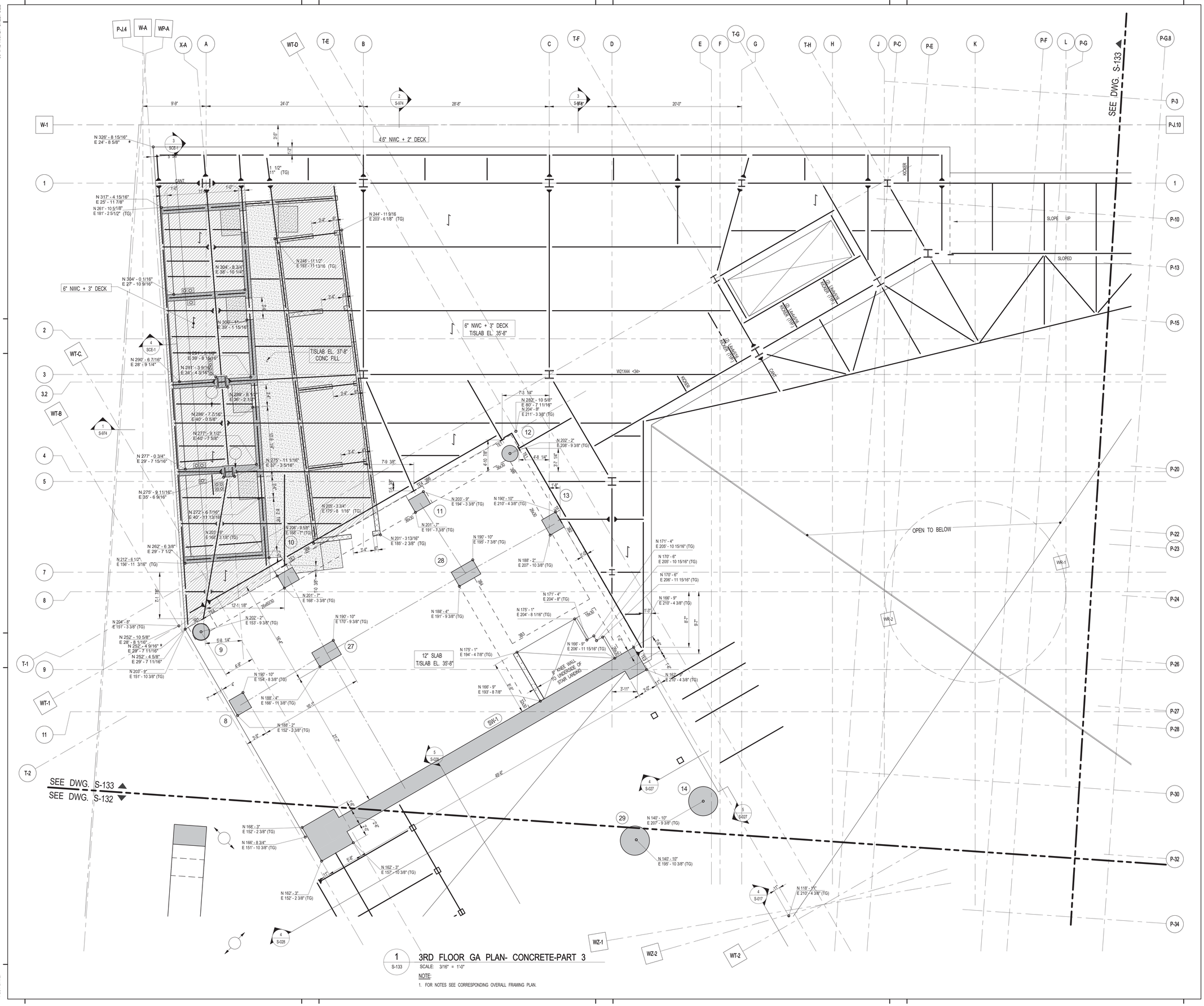

1 S-133 **3RD FLOOR GA PLAN- CONCRETE-PART 3**

SCALE: 3/16" = 1'-0"

NOTE:

1. FOR NOTES SEE CORRESPONDING OVERALL FRAMING PLAN.

FILE NAME:
PLOT DATE:

KEY PLAN:

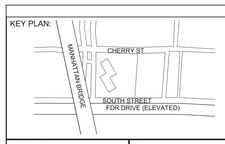

PROJECT NORTH

TRUE NORTH

DEVELOPER:
EXTELL DEVELOPMENT COMPANY
805 Third Ave, 7th Floor
New York, NY 10022
TEL: 212-712-6000 FAX: 212-712-6100

ARCHITECT OF RECORD:
AAI ARCHITECTS, P.C.
14 Wall Street, 2nd Floor
New York, NY 10005
TEL: 212-964-4040 FAX: 212-964-4090

INTERIOR DESIGNER:
MEYER DAVIS
180 Varick St, suite 404
New York, NY 10014
TEL: 212-627-5574

LANDSCAPE DESIGNER:
WEST 8 URBAN DESIGN & LANDSCAPE ARCHITECTURE P.C.
333 Hudson Street, Suite 905
New York, NY 10013
TEL: 212-285-0088 FAX: 212-285-0228

STRUCTURAL ENGINEERS:
WSP
228 East 45th Street
New York, NY 10017
TEL: 212-687-9888 FAX: 646-487-5501

MEP ENGINEERS:
ICOR ASSOCIATES, LLC
485 C Route 1 South, Suite 200
Iseline, NJ 08830
TEL: 908-272-3300 FAX: 908-272-4440

GEOTECHNICAL ENGINEERS:
LANGAN ENGINEERING & ENVIRONMENTAL SERVICES
21 Penn Plaza - 360 West 31st Street, 8th Floor
New York, NY 10001
TEL: 212.479.5400 FAX: 212.479.5444

No.	DESCRIPTION:	DATE:
1	90% CONSTRUCTION DOCUMENTS	01-15-16
2	ASI #56	02-19-16
3	ASI #58	03-04-16
4	ISSUED FOR FILING	03-07-16

Discrepancies must be reported immediately to the Architect before proceeding. Only figured dimensions are to be used. Contractors must check all dimensions on site. This drawing is protected by copyright.

ALL DIMENSIONS ARE SHOWN IN IMPERIAL.

CONSULTANT:
WSP

PROJECT:
252 SOUTH STREET
NEW YORK, NY

DRAWING TITLE:
3RD FLOOR GA
FLOOR-CONCRETE- PART 3

SEAL & SIGNATURE:
STATE OF NEW YORK · AHMAD RAHIMIAN · No. 085527 · LICENSED PROFESSIONAL ENGINEER

DATE: 10/27/15
PROJECT No: 1302510
DRAWN: CAD REV:
CHK: CL
SCALE: As indicated
DWG No: **S-133.00**
DOB PAGE No: of

DOB EMPLOYEE STAMP:
Damian Titus
Buildings
APPROVED
Under Directive 2 of 1975
AMENDED APPLICATION
Date: 04/12/2016
NYC Development Hub

DOB B-SCAN:

DEPT OF BLDGS121805639 Job Number
ES6441758039 Scan Code

30" x 42" Arch E1 - SHEET SIZE

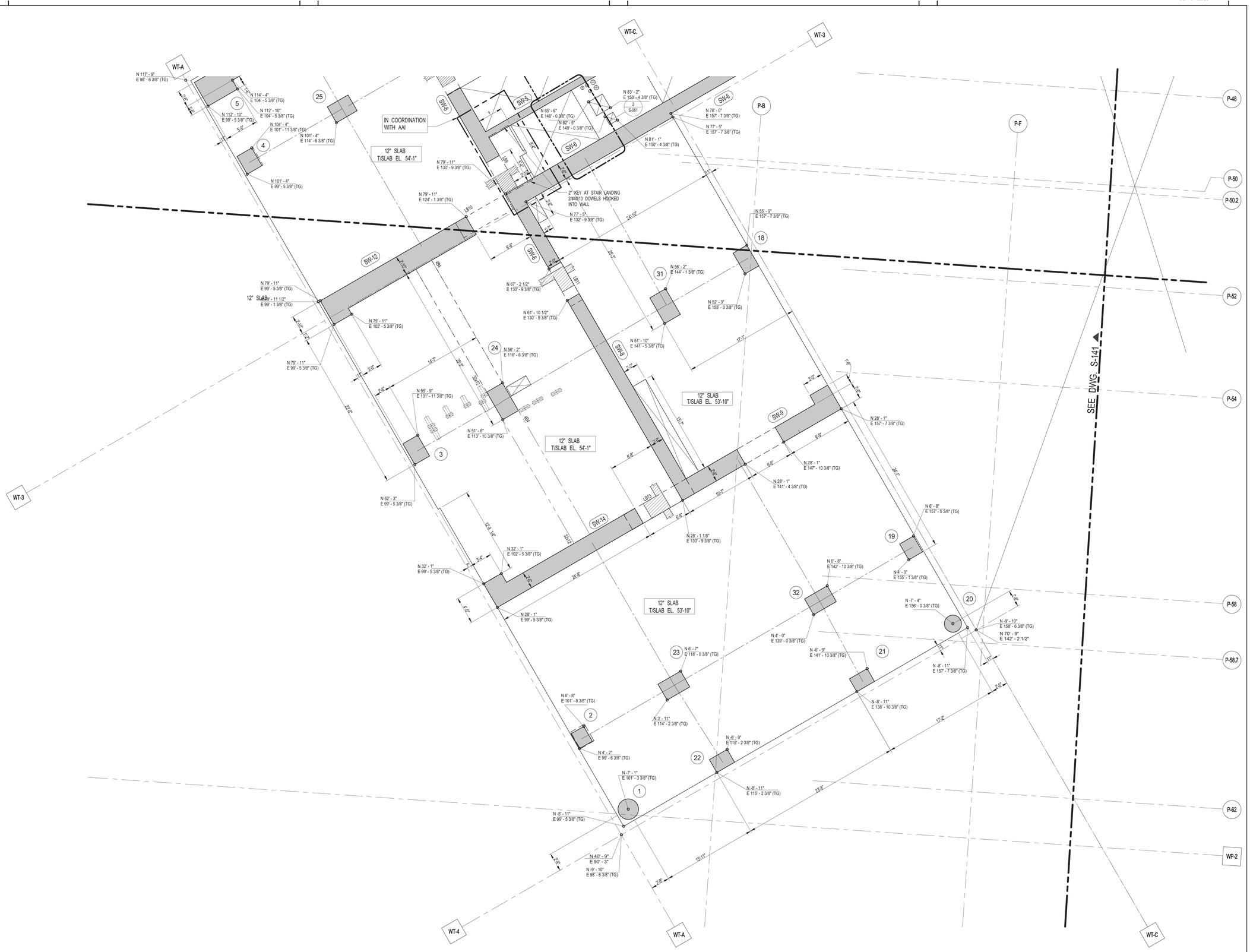

1 S-141 — 4TH FLOOR GA PLAN - CONCRETE - PART 1
SCALE: 3/16" = 1'-0"

NOTE:
1. FOR NOTES SEE CORRESPONDING OVERALL FRAMING PLAN.

KEY PLAN:

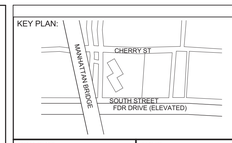

PROJECT NORTH | TRUE NORTH

DEVELOPER:
EXTELL DEVELOPMENT COMPANY
805 Third Ave, 7th Floor
New York, NY 10022
TEL: 212-712-6000 FAX: 212-712-6100

ARCHITECT OF RECORD:
AAI ARCHITECTS, P.C.
14 Wall Street, 2nd Floor
New York, NY 10005
TEL: 212-964-4040 FAX: 212-964-4090

INTERIOR DESIGNER:
MEYER DAVIS
180 Varick St, suite 404
New York, NY 10014
TEL: 212-627-5574

LANDSCAPE DESIGNER:
WEST 8 URBAN DESIGN & LANDSCAPE ARCHITECTURE P.C.
333 Hudson Street, Suite 905
New York, NY 10013
TEL: 212-285-0088 FAX: 212-285-0228

STRUCTURAL ENGINEERS:
WSP
228 East 45th Street
New York, NY 10017
TEL: 212-687-9888 FAX: 646-487-5501

MEP ENGINEERS:
ICOR ASSOCIATES, LLC
485 C Route 1 South, Suite 200
Iseline, NJ 08830
TEL: 908-272-3300 FAX: 908-272-4440

GEOTECHNICAL ENGINEERS:
LANGAN ENGINEERING & ENVIRONMENTAL SERVICES
21 Penn Plaza - 360 West 31st Street, 8th Floor
New York, NY 10001
TEL: 212.479.5400 FAX: 212.479.5444

No.	DESCRIPTION:	DATE:
1	90% CONSTRUCTION DOCUMENTS	01-15-16
2	ADDENDUM #16	02-04-16
3	ASI #58	03-04-16
4	ISSUED FOR FILING	03-07-16

Discrepancies must be reported immediately to the Architect before proceeding. Only figured dimensions are to be used. Contractors must check all dimensions on site. This drawing is protected by copyright.

ALL DIMENSIONS ARE SHOWN IN IMPERIAL.

CONSULTANT:
WSP

PROJECT:
252 SOUTH STREET
NEW YORK, NY

DRAWING TITLE:
4TH FLOOR GA PLAN-CONCRETE-PART 1

SEAL & SIGNATURE:
STATE OF NEW YORK · AHMAD RAHIMIAN · No. 085552 · LICENSED PROFESSIONAL ENGINEER

DATE:	10/29/15
PROJECT No:	1302510
DRAWN: CAD	REV:
CHK: CL	
SCALE: As indicated	
DWG No:	**S-141.00**
DOB PAGE No:	of

DOB EMPLOYEE STAMP:
Damian Titus
Buildings
APPROVED
Under Directive 2 of 1975
AMENDED APPLICATION
Date: 04/11/2016
NYC Development Hub

DOB B-SCAN:

FILE NAME:
PLOT DATE:

DEPT OF BLDGS121185569 Job Number
E-S4539616589 Scan Code

30" x 42" Arch E1 - SHEET SIZE

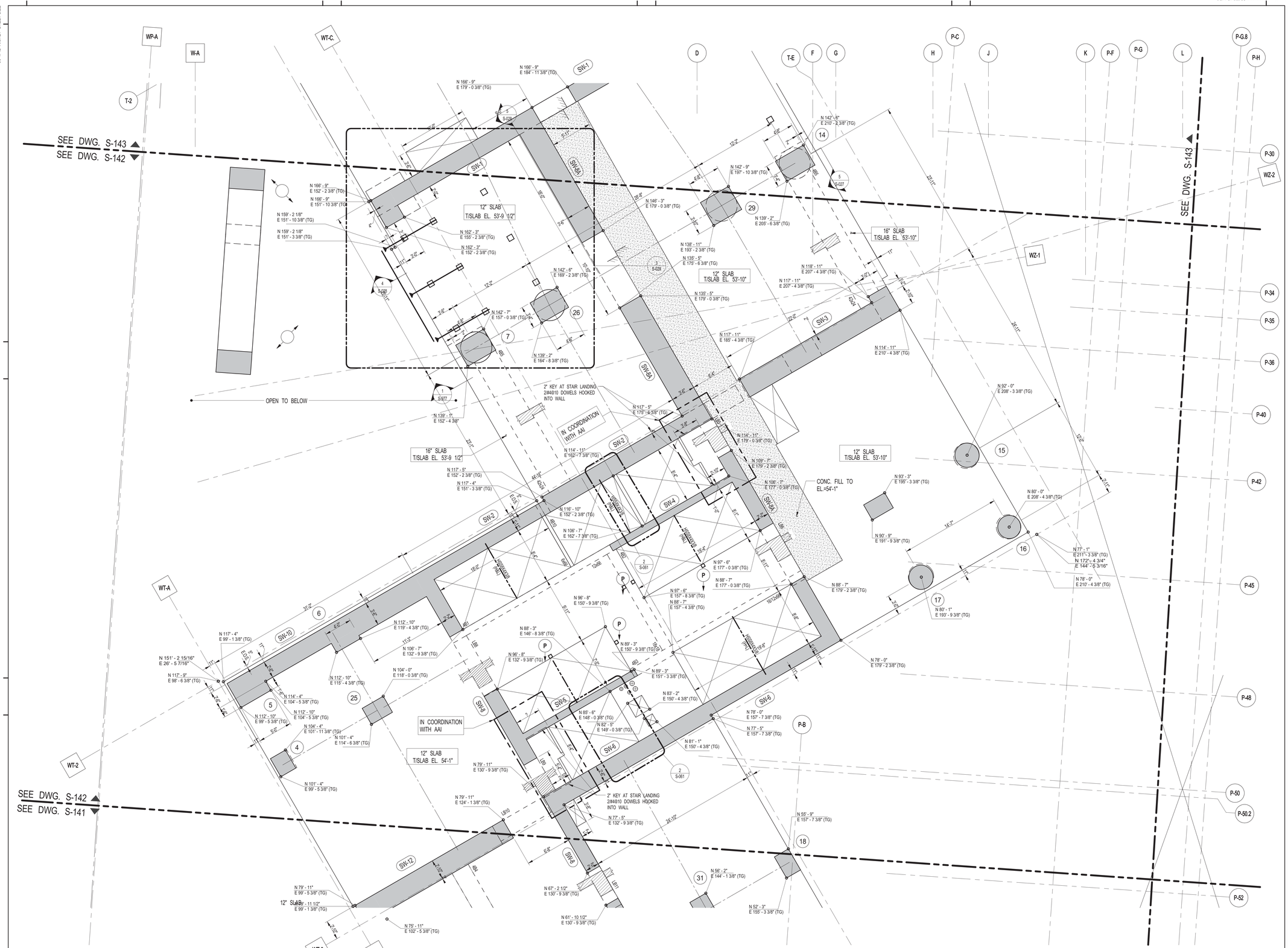

1 S-142 — 4TH FLOOR GA PLAN - CONCRETE- PART 2

SCALE: 3/16" = 1'-0"

NOTE:

1. FOR NOTES SEE CORRESPONDING OVERALL FRAMING PLAN.

KEY PLAN:

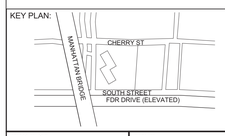

PROJECT NORTH

TRUE NORTH

DEVELOPER:
EXTELL DEVELOPMENT COMPANY
805 Third Ave, 7th Floor
New York, NY 10022
TEL: 212-712-6000 FAX: 212-712-6100

ARCHITECT OF RECORD:
AAI ARCHITECTS, P.C.
14 Wall Street, 2nd Floor
New York, NY 10005
TEL: 212-964-4040 FAX: 212-964-4090

INTERIOR DESIGNER:
MEYER DAVIS
180 Varick St, suite 404
New York, NY 10014
TEL: 212-627-5574

LANDSCAPE DESIGNER:
WEST 8 URBAN DESIGN & LANDSCAPE ARCHITECTURE P.C.
333 Hudson Street, Suite 905
New York, NY 10013
TEL: 212-285-0088 FAX: 212-285-0228

STRUCTURAL ENGINEERS:
WSP
228 East 45th Street
New York, NY 10017
TEL: 212-687-9888 FAX: 646-487-5501

MEP ENGINEERS:
ICOR ASSOCIATES, LLC
485 C Route 1 South, Suite 200
Iseline, NJ 08830
TEL: 908-272-3300 FAX: 908-272-4440

GEOTECHNICAL ENGINEERS:
LANGAN ENGINEERING & ENVIRONMENTAL SERVICES
21 Penn Plaza - 360 West 31st Street, 8th Floor
New York, NY 10001
TEL: 212.479.5400 FAX: 212.479.5444

No.	DESCRIPTION:	DATE:
1	90% CONSTRUCTION DOCUMENTS	01-15-16
2	ADDENDUM #16	02-04-16
3	ASI #57	02-26-16
4	ASI #58	03-04-16
5	ISSUED FOR FILING	03-07-16

Discrepancies must be reported immediately to the Architect before proceeding. Only figured dimensions are to be used. Contractors must check all dimensions on site. This drawing is protected by copyright.

ALL DIMENSIONS ARE SHOWN IN IMPERIAL.

CONSULTANT:
WSP

PROJECT:
252 SOUTH STREET
NEW YORK, NY

DRAWING TITLE:
4TH FLOOR GA PLAN-CONCRETE-PART 2

SEAL & SIGNATURE:
STATE OF NEW YORK — AHMAD RAHIMIAN — No. 085827 — LICENSED PROFESSIONAL ENGINEER

DATE:	10/29/15
PROJECT No:	1302510
DRAWN: CAD	REV:
CHK: CL	
SCALE: As indicated	
DWG No:	**S-142.00**
DOB PAGE No:	of

DOB EMPLOYEE STAMP:
Damian Titus
Buildings
APPROVED
Under Directive 2 of 1975
AMENDED APPLICATION
Date: 04/11/2016
NYC Development Hub

DOB B-SCAN:

FILE NAME:
PLOT DATE:

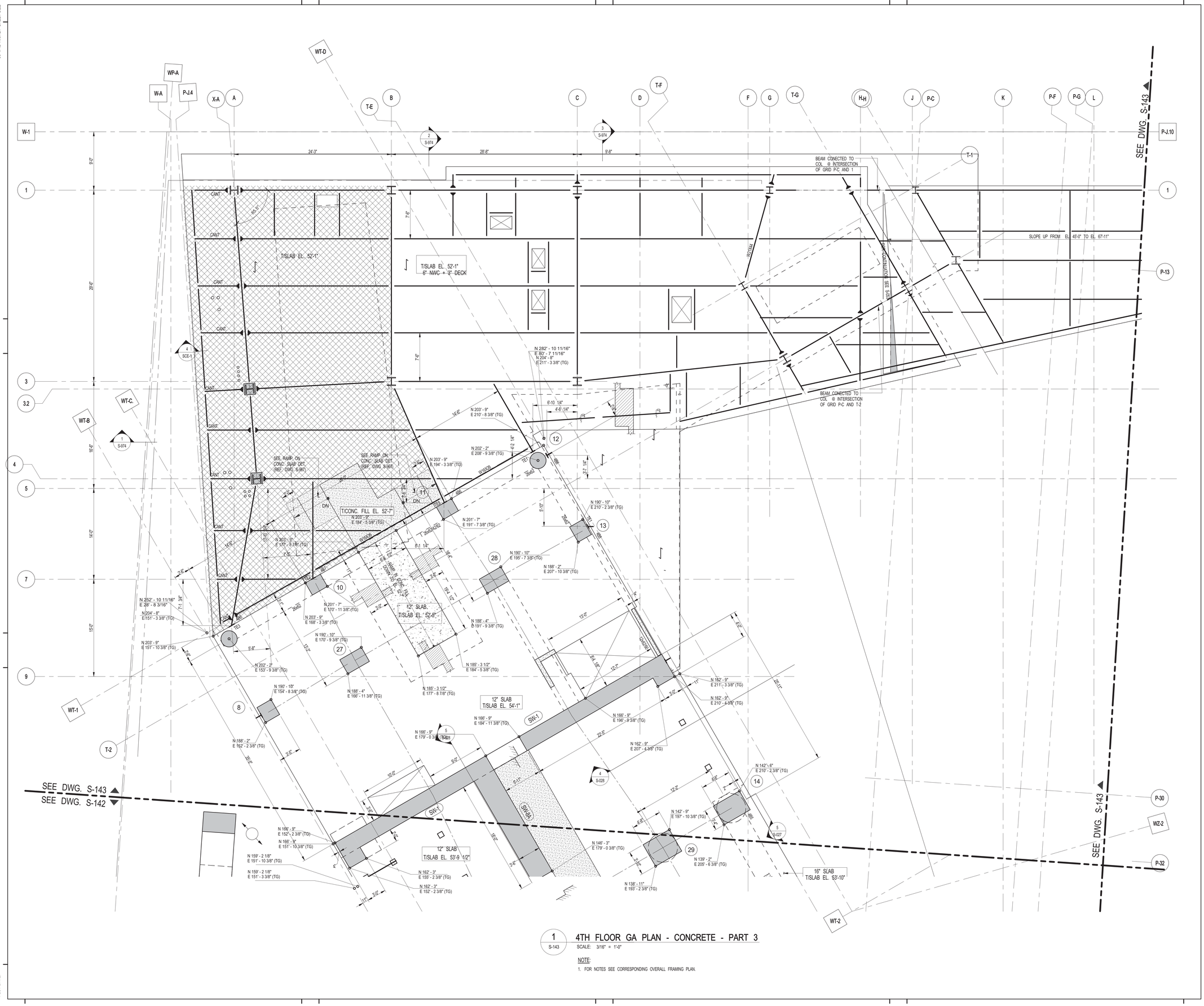

1 S-143 4TH FLOOR GA PLAN - CONCRETE - PART 3

SCALE: 3/16" = 1'-0"

NOTE:

1. FOR NOTES SEE CORRESPONDING OVERALL FRAMING PLAN.

KEY PLAN:

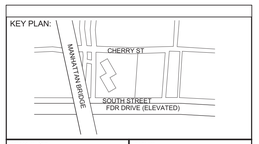

PROJECT NORTH

TRUE NORTH

DEVELOPER:
EXTELL DEVELOPMENT COMPANY
805 Third Ave, 7th Floor
New York, NY 10022
TEL: 212-712-6000 FAX: 212-712-6100

ARCHITECT OF RECORD:
AAI ARCHITECTS, P.C.
14 Wall Street, 2nd Floor
New York, NY 10005
TEL: 212-964-4040 FAX: 212-964-4090

INTERIOR DESIGNER:
MEYER DAVIS
180 Varick St, suite 404
New York, NY 10014
TEL: 212-627-5574

LANDSCAPE DESIGNER:
WEST 8 URBAN DESIGN & LANDSCAPE ARCHITECTURE P.C.
333 Hudson Street, Suite 905
New York, NY 10013
TEL: 212-285-0088 FAX: 212-285-0228

STRUCTURAL ENGINEERS:
WSP
228 East 45th Street
New York, NY 10017
TEL: 212-687-9888 FAX: 646-487-5501

MEP ENGINEERS:
ICOR ASSOCIATES, LLC
485 C Route 1 South, Suite 200
Iseline, NJ 08830
TEL: 908-272-3300 FAX: 908-272-4440

GEOTECHNICAL ENGINEERS:
LANGAN ENGINEERING & ENVIRONMENTAL SERVICES
21 Penn Plaza - 360 West 31st Street, 8th Floor
New York, NY 10001
TEL: 212.479.5400 FAX: 212.479.5444

No.	DESCRIPTION:	DATE:
1	90% CONSTRUCTION DOCUMENTS	01-15-16
2	ADDENDUM #16	02-04-16
3	ASI #58	03-04-16
4	ISSUED FOR FILING	03-07-16

Discrepancies must be reported immediately to the Architect before proceeding. Only figured dimensions are to be used. Contractors must check all dimensions on site. This drawing is protected by copyright.

ALL DIMENSIONS ARE SHOWN IN IMPERIAL.

CONSULTANT:
WSP

PROJECT:
252 SOUTH STREET
NEW YORK, NY

DRAWING TITLE:
4TH FLOOR GA PLAN-CONCRETE - PART 3

SEAL & SIGNATURE:
STATE OF NEW YORK
AHMAD RAHIMIAN
No. 065537
LICENSED PROFESSIONAL ENGINEER

DATE:	10/29/15
PROJECT No:	1302510
DRAWN: CAD	REV:
CHK: CL	
SCALE: As indicated	
DWG No:	S-143.00
DOB PAGE No:	of

DOB EMPLOYEE STAMP:
Damian Titus
Buildings
APPROVED
Under Directive 2 of 1975
AMENDED APPLICATION
Date: 04/11/2016
NYC Development Hub

DOB B-SCAN:

FILE NAME:
PLOT DATE:

DEPT OF BLDGS 121185539 Job Number
E-598963879 49 Scan Code
30" x 42" Arch E1 - SHEET SIZE

1 S-010 — 1ST FLOOR OVERALL FRAMING PLAN
SCALE: 1/16" = 1'-0"

2 S-010 — PART FRAMING PLAN @ EL. 19'-8"
SCALE: 1/8" = 1'-0"

1ST FLOOR BEAM SCHEDULE

BEAM MARK	SIZE WIDTH	SIZE DEPTH	REINFORCEMENT BOTTOM CONTINUOUS	REINFORCEMENT TOP CONTINUOUS	STIRRUPS TYPE	STIRRUPS SIZE	STIRRUPS SPACING	REMARKS
1B1	36	36	6-#9	6-#11	2	#4	@10	
1B2	28	48	4-#10	4-#10	2	#4	@10	
1B4	30	36	10-#11	10-#11	2	#4	@10	#4@10 HORIZ. E.F. CONT.
1B5	12	24	2-#11	2-#11	1	#4	@6	
1B6	24	69	4-#8	4-#8	1	#4	@12	#4@10 HORIZ. E.F., CONT.
1B7	24	50	6-#11	6-#9	1	#4	@10	#4@10 HORIZ. E.F., CONT.
1B8	12	24	2-#9	2-#9	1	#4	@10	
1B9	12	24	3-#11	2-#11	1	#4	@10	
1B10	14	12	2-#6	2-#6	1	#4	@5	
1B11	24	24	3-#9	3-#11	1	#4	@10	
1B14	12	18	2-#9	2-#9	1	#4	@8	
1B15	24	24	3-#9	3-#8	1	#4	@8	

TYPE 1 TYPE 2
STIRRUP TYPES

NOTE FOR:
PARKING FLOORS, RAMPS, DRIVEWAYS EXPOSED TOPPING, SIDE WALKS - ALL DIRECTLY EXPOSED TO CARS AND/OR PEDESTRIAN TRAFFIC.
1. DCI (CALCIUM NITRITE) CORROSION INHIBITOR, (4.0 GAL/YD3)
2. WATER/CEMENT RATIO NOT TO EXCEED 0.40
3. USE OF SUPERPLASTICIZER TO ACHIEVE THE W/C RATIO.
4. CONCRETE TO CONTAIN SILICIA FUME (5% OF TOTAL CEMENT) OR SLAG (40%)
5. 1.5 LBS/YD3 FIBER MESH.
6. ENTRAINED AIR AT 6% ± 1.
7. ALL TOP & BOTTOM REBAR SHALL BE EPOXY COATED.
8. ALL CONSTRUCTION JOINTS SHALL HAVE WATER STOP AS PER DETAIL ON S-962.
9. THE CURING SHALL BE ONLY MOIST TYPE. NO CURING COMPOUND ACCEPTABLE.
10. ALTHOUGH PROTECTIVE MEASURES WERE INCORPORATED IN THE DESIGN OF THE PARKING AREAS AND RAMPS, THESE AREAS MUST BE CAREFULLY MAINTAINED IN ORDER TO PREVENT EARLY DETERIORATION.

NOTES:
1. TOP OF SLAB ELEVATION TO BE 13'-5" U.O.N. THUS ___ ON PLAN.
2. SLAB TO BE 12" THICK U.O.N. THUS ___ ON PLAN.
3. CONCRETE STRENGTH f'_c OF SLAB SHALL BE 8,600 psi
4. BOTTOM REINFORCEMENT TO BE: #5@12 CONT. E.W. FOR 12" SLAB AND 14" SLAB
   #5@10 CONT. EW. FOR 16" SLAB.
   #6@12 CONT. EW. FOR 20" SLAB.
5. LOCATION AND QUANTITY OF SLEEVES, FLOOR DRAINS, WALL PENETRATIONS, ETC TO BE COORDINATED WITH ARCH. AND MECH. DRAWINGS
6. FOR SIZE AND LOCATION OF CURBS SEE ARCH. DWGS. FOR REINF. SEE TYPICAL DETAILS ON S-967.
7. PROVIDE HOUSEKEEPING PADS BENEATH MECHANICAL EQUIPMENT AS REQUIRED. COORDINATE SIZE, THICKNESS AND LOCATION WITH MECHANICAL DRAWINGS. SEE TYPICAL DETAIL ON S-967.
8. * INDICATES SEISMIC / WIND BARS.
9. FOR DETAILS OF INTEGRITY REINFORCEMENT, SEE DWG. S-965
10. FOR DEPRESSION @ BUILDING PERIMETER (SPANDREL DETAIL) SEE S-965.
11. FOR SHEARWALL DETAILS ELEVATION AND REINFORCEMENT SEE S-800 AND S-940 SERIES DWG'S.
12. FOR COLUMN SCHEDULE AND DETAILS SEE S-950 SERIES DWG'S.
13. FOR TYPICAL SUPERSTRUCTURE DETAILS SEE S-960 SERIES DWG'S
14. FOR SUPERSTRUCTURE SECTIONS SEE S-970 SERIES DRAWINGS.
15. FOR STAIR SECTIONS AND TYPICAL DETAIL SEE S-980 SERIES DRAWINGS.
16. ALL REINF. AT EXPOSED CONCRETE ELEMENTS (COLUMNS, WALLS, BEAMS, SLAB & TIES) SHALL BE EPOXY COATED. REBARS IN SWIMMING POOL REGION (BEAM & SLAB ABOVE THE POOL WALL, BEAM & SLAB @ SIDE OF POOL) SHALL BE EPOXY COATED.
17. FOR GENERAL NOTES AND LEGEND SEE FO-001 AND FO-002.

ADD'L STEEL FRAMING NOTES:
1. COMPOSITE SLAB CONSTRUCTION SHALL BE 6 " NORMAL WEIGHT CONCRETE ON TOP OF 3" DEEP 18GA (Fy=50 KSI) COMPOSITE GALVANIZED METAL DECK (TOTAL SLAB DEPTH= 9"), REINFORCED WITH #5@12 TOP E.W. + #4@12 BOTTOM (FLUTE) (CONCRETE f'c=4000psi AT 28 DAYS) U.O.N.
2. TOP OF STEEL TO BE 9" BELOW TOP OF SLAB ELEVATION SPECIFIED IN NOTE 1 U.O.N. THUS (±...) INDICATING DISTANCE ABOVE OR BELOW TOP OF SLAB ELEVATION.
3. STUDS SHALL BE ½"Ø x 5" LONG. ALL STEEL BEAMS SHALL HAVE MIN. 1 STUD/FT. U.O.N. THUS < > ON PLAN.
4. ALL BEAM CONNECTIONS SHALL DEVELOP AXIAL FORCE OF P=75k, GIRDERS (SUPPORTING OTHER MEMBERS) P=150K AT EACH END U.O.N. ON PLAN, IN ADDITION TO ALL OTHER LOADS.
5. FOR BEAM REACTIONS NOT SHOWN USE A MINIMUM OF 30 KIPS FOR BEAMS LESS THAN 15 FEET LONG.

LEGEND:
TEx - INDICATES EMBEDMENT PLATE REQUIRED FOR STEEL BEAM CONNECTION TO CONCRETE COLUMN

P1 INDICATES HSS10X10X3/4 POST.
P1A INDICATES W12X120 POST.
P2 INDICATES W8X28 POST.
P3 INDICATES W12X65 POST.
P4 INDICATES HSS6X6X3/8 POST.
P5 INDICATES W10X45 POST
H1 INDICATES W12X65 HANGER.
H2 INDICATES HSS6X6X3/8 HANGER.
BP1 INDICATES BEARING PLATE 3/4"x6"x1'-0"
BP2 INDICATES BEARING PLATE 2"x6"x1'-0"

KEY PLAN:
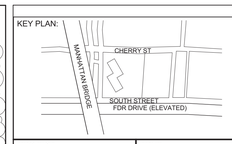

PROJECT NORTH
TRUE NORTH

DEVELOPER:
EXTELL DEVELOPMENT COMPANY
805 Third Ave, 7th Floor
New York, NY 10022
TEL: 212-712-6000 FAX: 212-712-6100

ARCHITECT OF RECORD:
AAI ARCHITECTS, P.C.
14 Wall Street, 2nd Floor
New York, NY 10005
TEL: 212-964-4040 FAX: 212-964-4090

INTERIOR DESIGNER:
MEYER DAVIS
180 Varick St, suite 404
New York, NY 10014
TEL: 212-627-5574

LANDSCAPE DESIGNER:
WEST 8 URBAN DESIGN & LANDSCAPE ARCHITECTURE P.C.
333 Hudson Street, Suite 905
New York, NY 10013
TEL: 212-285-0088 FAX: 212-285-0228

STRUCTURAL ENGINEERS:
WSP
228 East 45th Street
New York, NY 10017
TEL: 212-687-9888 FAX: 646-487-5501

MEP ENGINEERS:
ICOR ASSOCIATES, LLC
485 C Route 1 South, Suite 200
Iseline, NJ 08830
TEL: 908-272-3300 FAX: 908-272-4440

GEOTECHNICAL ENGINEERS:
LANGAN ENGINEERING & ENVIRONMENTAL SERVICES
21 Penn Plaza - 360 West 31st Street, 8th Floor
New York, NY 10001
TEL: 212.479.5400 FAX: 212.479.5444

No.	DESCRIPTION:	DATE:
1	50% SD	02-28-14
2	100%SD	04-25-14
3	ISSUED FOR DOT	04-28-14
4	FOUNDATION FILING	06-10-14
5	50% DD	08-01-14
6	DESIGN DEVELOPMENT	10-07-14
7	ISSUED FOR FILING	02-13-15
8	STEEL BID PACKAGE	02-24-15
9	CONCRETE BID PACKAGE	03-06-15
10	ADDENDUM #3	03-27-15
11	50% CONSTRUCTION DOCUMENTS	04-08-15
12	ADDENDUM #4	04-24-15
13	ADDENDUM #9	07-10-15
14	ADDENDUM #10	07-20-15
15	ISSUED FOR FILING	07-28-15

Discrepancies must be reported immediately to the Architect before proceeding. Only figured dimensions are to be used. Contractors must check all dimensions on site. This drawing is protected by copyright.

ALL DIMENSIONS ARE SHOWN IN IMPERIAL.

CONSULTANT: WSP

PROJECT:
250 SOUTH STREET
NEW YORK, NY

DRAWING TITLE:
1ST FLOOR OVERALL FRAMING PLAN

SEAL & SIGNATURE:
STATE OF NEW YORK — AHMAD RAHIMIAN — No. 085527 — LICENSED PROFESSIONAL ENGINEER

DATE:	02/28/14
PROJECT No:	1302510
DRAWN:	CAD
REV:	
CHK:	CL
SCALE:	
DWG No:	**S-010.01**
DOB PAGE No:	of

DOB EMPLOYEE STAMP:
Damian Titus
NYC Buildings
APPROVED
Under Directive 2 of 1975
AMENDED APPLICATION
Date: 10/08/2015
NYC Development Hub

DOB B-SCAN:

FILE NAME:
PLOT DATE:

DEPT OF BLDGS 121185528 Job Number
ES000909492 Scan Code

1 S-011 1ST FLOOR FRAMING PLAN - PART 1
SCALE: 3/16" = 1'-0"

NOTE: FOR BALANCE OF INFORMATION SEE CORRESPONDING FRAMING PLAN

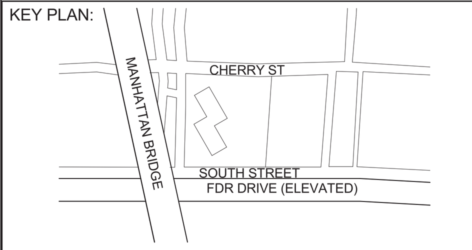

PROJECT NORTH | TRUE NORTH

DEVELOPER:
EXTELL DEVELOPMENT COMPANY
805 Third Ave, 7th Floor
New York, NY 10022
TEL: 212-712-6000 FAX: 212-712-6100

ARCHITECT OF RECORD:
AAI ARCHITECTS, P.C.
14 Wall Street, 2nd Floor
New York, NY 10005
TEL: 212-964-4040 FAX: 212-964-4090

INTERIOR DESIGNER:
MEYER DAVIS
180 Varick St, suite 404
New York, NY 10014
TEL: 212-627-5574

LANDSCAPE DESIGNER:
WEST 8 URBAN DESIGN & LANDSCAPE ARCHITECTURE P.C.
333 Hudson Street, Suite 905
New York, NY 10013
TEL: 212-285-0088 FAX: 212-285-0228

STRUCTURAL ENGINEERS:
WSP
228 East 45th Street
New York, NY 10017
TEL: 212-687-9888 FAX: 646-487-5501

MEP ENGINEERS:
ICOR ASSOCIATES, LLC
485 C Route 1 South, Suite 200
Iseline, NJ 08830
TEL: 908-272-3300 FAX: 908-272-4440

GEOTECHNICAL ENGINEERS:
LANGAN ENGINEERING & ENVIRONMENTAL SERVICES
21 Penn Plaza - 360 West 31st Street, 8th Floor
New York, NY 10001
TEL: 212.479.5400 FAX: 212.479.5444

No.	DESCRIPTION:	DATE:
1	DESIGN DEVELOPMENT	10-07-14
2	STEEL BID PACKAGE	02-24-15
3	CONCRETE BID PACKAGE	03-06-15
4	ADDENDUM #3	03-27-15
5	50% CONSTRUCTION DOCUMENTS	04-08-15
6	ADDENDUM #5	05-01-15
7	ADDENDUM #10	07-20-15
8	ISSUED FOR FILING	07-28-15

Discrepancies must be reported immediately to the Architect before proceeding. Only figured dimensions are to be used. Contractors must check all dimensions on site. This drawing is protected by copyright.

ALL DIMENSIONS ARE SHOWN IN IMPERIAL.

CONSULTANT: WSP

PROJECT:
250 SOUTH STREET
NEW YORK, NY

DRAWING TITLE:
1ST FLOOR FRAMING PLAN - PART 1

SEAL & SIGNATURE: STATE OF NEW YORK · AHMAD RAHIMIAN · No. 065537 · LICENSED PROFESSIONAL ENGINEER

DATE:	03/03/14
PROJECT No:	1302510
DRAWN:	CAD
CHK:	CL
REV:	
SCALE:	
DWG No:	S-011.01
DOB PAGE No:	of

DOB EMPLOYEE STAMP:
Damian Titus
NYC Buildings
APPROVED
Under Directive 2 of 1975
AMENDED APPLICATION
Date: 10/08/2015
NYC Development Hub

DOB B-SCAN:

DEPT OF BLDGS121185539 Job Number
E509163263S7 Scan Code
30" x 42" Arch E1 - SHEET SIZE

1 S-012 — 1ST FLOOR FRAMING PLAN - PART 2
SCALE: 3/16" = 1'-0"
NOTE: FOR BALANCE OF INFORMATION SEE CORRESPONDING FRAMING PLAN

FILE NAME:
PLOT DATE:

KEY PLAN:
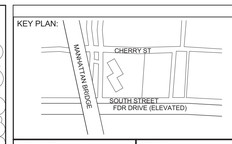

PROJECT NORTH | TRUE NORTH

DEVELOPER:
EXTELL DEVELOPMENT COMPANY
805 Third Ave, 7th Floor
New York, NY 10022
TEL: 212-712-6000 FAX: 212-712-6100

ARCHITECT OF RECORD:
AAI ARCHITECTS, P.C.
14 Wall Street, 2nd Floor
New York, NY 10005
TEL: 212-964-4040 FAX: 212-964-4090

INTERIOR DESIGNER:
MEYER DAVIS
180 Varick St, suite 404
New York, NY 10014
TEL: 212-627-5574

LANDSCAPE DESIGNER:
WEST 8 URBAN DESIGN & LANDSCAPE ARCHITECTURE P.C.
333 Hudson Street, Suite 905
New York, NY 10013
TEL: 212-285-0088 FAX: 212-285-0228

STRUCTURAL ENGINEERS:
WSP
228 East 45th Street
New York, NY 10017
TEL: 212-687-9888 FAX: 646-487-5501

MEP ENGINEERS:
ICOR ASSOCIATES, LLC
485 C Route 1 South, Suite 200
Iseline, NJ 08830
TEL: 908-272-3300 FAX: 908-272-4440

GEOTECHNICAL ENGINEERS:
LANGAN ENGINEERING & ENVIRONMENTAL SERVICES
21 Penn Plaza - 360 West 31st Street, 8th Floor
New York, NY 10001
TEL: 212.479.5400 FAX: 212.479.5444

No.	DESCRIPTION:	DATE:
1	DESIGN DEVELOPMENT	10-07-14
2	STEEL BID PACKAGE	02-24-15
3	CONCRETE BID PACKAGE	03-06-15
4	ADDENDUM #3	03-27-15
5	50% CONSTRUCTION DOCUMENTS	04-08-15
6	ADDENDUM #4	04-24-15
7	ISSUED FOR FILING	07-28-15

Discrepancies must be reported immediately to the Architect before proceeding. Only figured dimensions are to be used. Contractors must check all dimensions on site. This drawing is protected by copyright.

ALL DIMENSIONS ARE SHOWN IN IMPERIAL.

CONSULTANT: WSP

PROJECT:
250 SOUTH STREET
NEW YORK, NY

DRAWING TITLE:
1ST FLOOR FRAMING PLAN - PART 2

SEAL & SIGNATURE:
STATE OF NEW YORK — AHMAD RAHIMIAN — No. 065527 — LICENSED PROFESSIONAL ENGINEER

DATE:	03/03/14
PROJECT No:	1302510
DRAWN: CAD	REV:
CHK: CL	
SCALE:	
DWG No:	**S-012.01**
DOB PAGE No:	of

DOB EMPLOYEE STAMP:
Damian Titus
Buildings
APPROVED
Under Directive 2 of 1975
AMENDED APPLICATION
Date: 10/08/2015
NYC Development Hub

DOB B-SCAN:

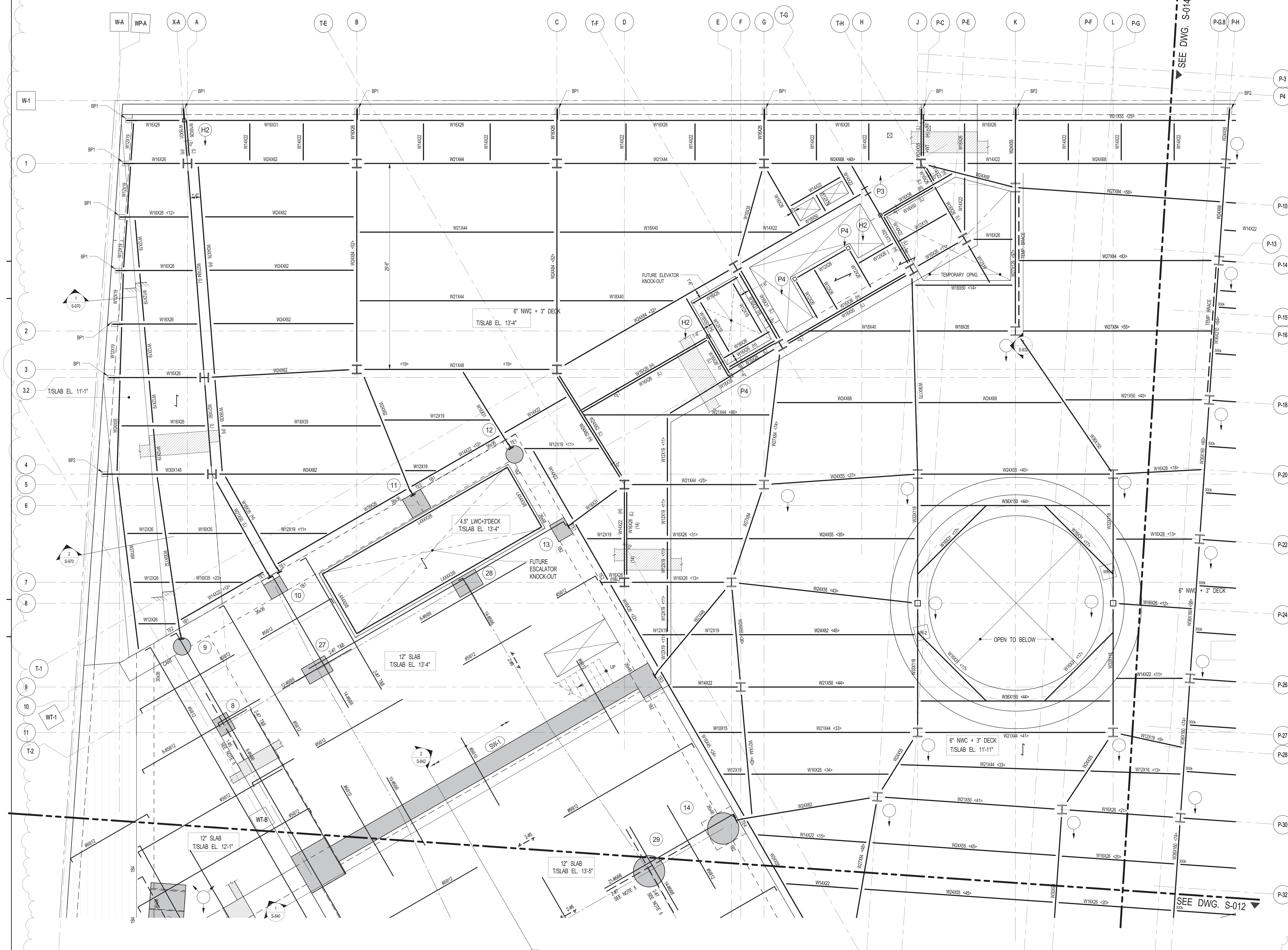

1 S-013 1ST FLOOR FRAMING PLAN - PART 3

SCALE: 3/16" = 1'-0"

NOTE: FOR BALANCE OF INFORMATION SEE CORRESPONDING FRAMING PLAN

KEY PLAN:

PROJECT NORTH | TRUE NORTH

DEVELOPER:
EXTELL DEVELOPMENT COMPANY
805 Third Ave, 7th Floor
New York, NY 10022
TEL: 212-712-6000 FAX: 212-712-6100

ARCHITECT OF RECORD:
AAI ARCHITECTS, P.C.
14 Wall Street, 2nd Floor
New York, NY 10005
TEL: 212-964-4040 FAX: 212-964-4090

INTERIOR DESIGNER:
MEYER DAVIS
180 Varick St, suite 404
New York, NY 10014
TEL: 212-627-5574

LANDSCAPE DESIGNER:
WEST 8 URBAN DESIGN & LANDSCAPE ARCHITECTURE P.C.
333 Hudson Street, Suite 905
New York, NY 10013
TEL: 212-285-0088 FAX: 212-285-0228

STRUCTURAL ENGINEERS:
WSP
228 East 45th Street
New York, NY 10017
TEL: 212-687-9888 FAX: 646-487-5501

MEP ENGINEERS:
ICOR ASSOCIATES, LLC
485 C Route 1 South, Suite 200
Iseline, NJ 08830
TEL: 908-272-3300 FAX: 908-272-4440

GEOTECHNICAL ENGINEERS:
LANGAN ENGINEERING & ENVIRONMENTAL SERVICES
21 Penn Plaza - 360 West 31st Street, 8th Floor
New York, NY 10001
TEL: 212.479.5400 FAX: 212.479.5444

No.	DESCRIPTION:	DATE:
1	DESIGN DEVELOPMENT	10-07-14
2	STEEL BID PACKAGE	02-24-15
3	Revision 22	Date 22
4	CONCRETE BID PACKAGE	03-06-15
5	ADDENDUM #3	03-27-15
6	50% CONSTRUCTION DOCUMENTS	04-08-15
7	ADDENDUM #4	04-24-15
8	ADDENDUM #5	05-01-15
9	ADDENDUM #9	07-10-15
10	ADDENDUM #10	07-20-15
11	ISSUED FOR FILING	07-28-15

Discrepancies must be reported immediately to the Architect before proceeding. Only figured dimensions are to be used. Contractors must check all dimensions on site. This drawing is protected by copyright.

ALL DIMENSIONS ARE SHOWN IN IMPERIAL.

CONSULTANT: WSP

PROJECT:
250 SOUTH STREET
NEW YORK, NY

DRAWING TITLE:
1ST FLOOR FRAMING PLAN - PART 3

SEAL & SIGNATURE: STATE OF NEW YORK AHMAD RAHIMIAN No. 065537 LICENSED PROFESSIONAL ENGINEER

DATE:	03/03/14
PROJECT No:	1302510
DRAWN: CAD	REV:
CHK: CL	
SCALE:	
DWG No:	**S-013.01**
DOB PAGE No:	of

DOB EMPLOYEE STAMP:
Damian Titus
NYC Buildings
APPROVED
Under Directive 2 of 1975
AMENDED APPLICATION
Date: 10/08/2015
NYC Development Hub

DOB B-SCAN:

1 S-014 1ST FLOOR FRAMING PART PLAN 4

SCALE: 3/16" = 1'-0"

NOTE: FOR BALANCE OF INFORMATION SEE CORRESPONDING FRAMING PLAN

KEY PLAN:

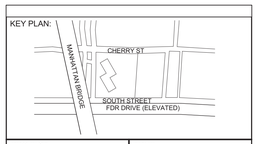

PROJECT NORTH

TRUE NORTH

DEVELOPER:
EXTELL DEVELOPMENT COMPANY
805 Third Ave, 7th Floor
New York, NY 10022
TEL: 212-712-6000 FAX: 212-712-6100

ARCHITECT OF RECORD:
AAI ARCHITECTS, P.C.
14 Wall Street, 2nd Floor
New York, NY 10005
TEL: 212-964-4040 FAX: 212-964-4090

INTERIOR DESIGNER:
MEYER DAVIS
180 Varick St, suite 404
New York, NY 10014
TEL: 212-627-5574

LANDSCAPE DESIGNER:
WEST 8 URBAN DESIGN & LANDSCAPE ARCHITECTURE P.C.
333 Hudson Street, Suite 905
New York, NY 10013
TEL: 212-285-0088 FAX: 212-285-0228

STRUCTURAL ENGINEERS:
WSP
228 East 45th Street
New York, NY 10017
TEL: 212-687-9888 FAX: 646-487-5501

MEP ENGINEERS:
ICOR ASSOCIATES, LLC
485 C Route 1 South, Suite 200
Iseline, NJ 08830
TEL: 908-272-3300 FAX: 908-272-4440

GEOTECHNICAL ENGINEERS:
LANGAN ENGINEERING & ENVIRONMENTAL SERVICES
21 Penn Plaza - 360 West 31st Street, 8th Floor
New York, NY 10001
TEL: 212.479.5400 FAX: 212.479.5444

No.	DESCRIPTION:	DATE:
1	DESIGN DEVELOPMENT	10-07-14
2	STEEL BID PACKAGE	02-24-15
3	ADDENDUM #3	03-27-15
4	50% CONSTRUCTION DOCUMENTS	04-08-15
5	ADDENDUM #4	04-24-15
6	ADDENDUM #5	05-01-15
7	ADDENDUM #9	07-10-15
8	ADDENDUM #10	07-20-15
9	ISSUED FOR FILING	07-28-15

Discrepancies must be reported immediately to the Architect before proceeding. Only figured dimensions are to be used. Contractors must check all dimensions on site. This drawing is protected by copyright.

ALL DIMENSIONS ARE SHOWN IN IMPERIAL.

CONSULTANT:
WSP

PROJECT:
250 SOUTH STREET
NEW YORK, NY

DRAWING TITLE:
1ST FLOOR FRAMING PLAN - PART 4

SEAL & SIGNATURE:

STATE OF NEW YORK
AHMAD RAHIMIAN
No. 065537
LICENSED PROFESSIONAL ENGINEER

DATE:	03/03/14
PROJECT No:	1302510
DRAWN: CAD	REV:
CHK: CL	
SCALE:	
DWG No:	S-014.01
DOB PAGE No:	of

DOB EMPLOYEE STAMP:

Damian Titus
NYC Buildings
APPROVED
Under Directive 2 of 1975
AMENDED APPLICATION
Date: 10/08/2015
NYC Development Hub

DOB B-SCAN:

DEPT OF BLDGS121185539 Job Number
ES21143979G Scan Code
30" x 42" Arch E1 - SHEET SIZE

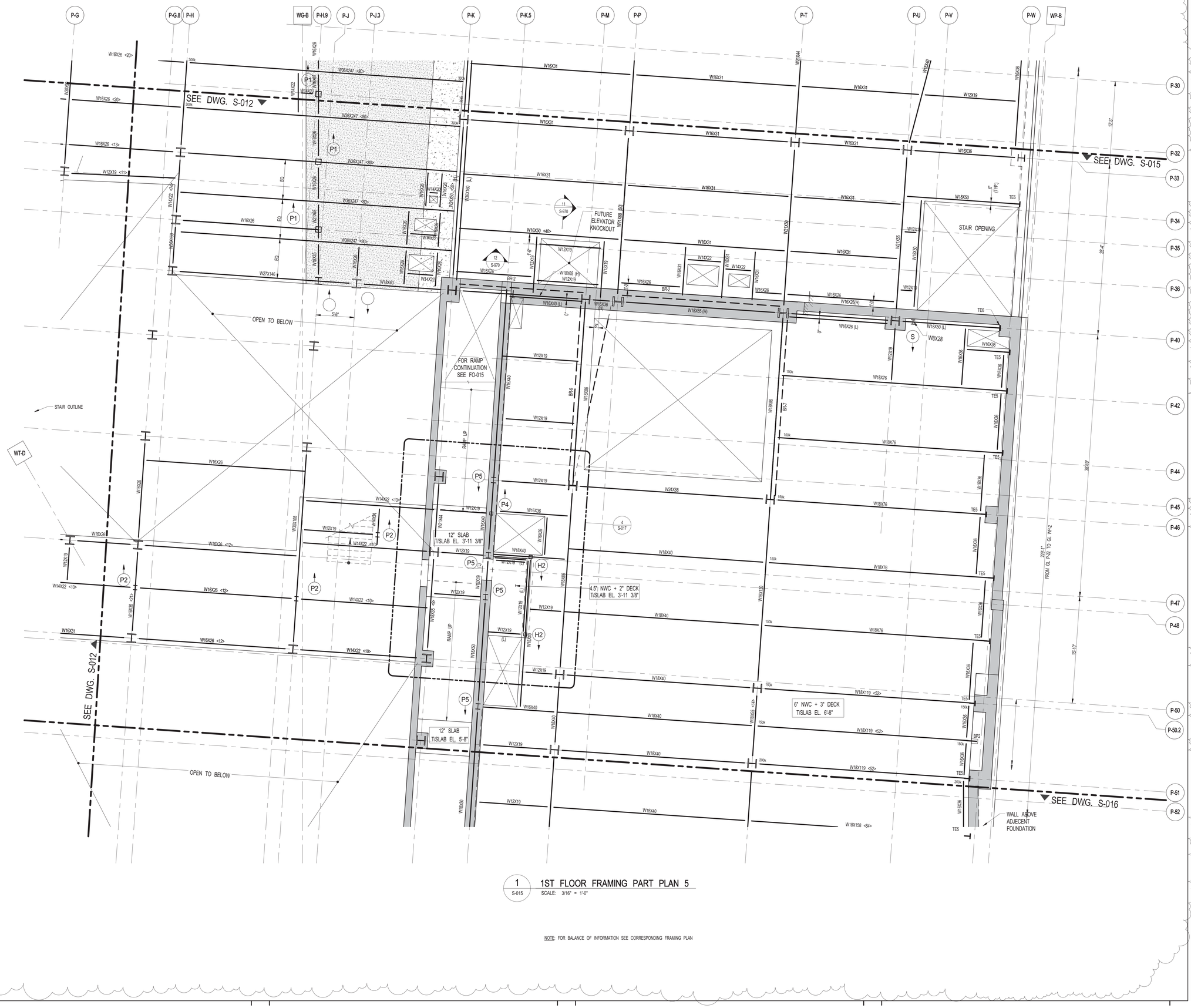

1 S-015 1ST FLOOR FRAMING PART PLAN 5

SCALE: 3/16" = 1'-0"

NOTE: FOR BALANCE OF INFORMATION SEE CORRESPONDING FRAMING PLAN

KEY PLAN:

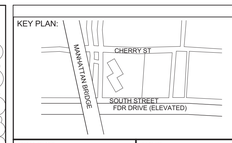

PROJECT NORTH

TRUE NORTH

DEVELOPER:
EXTELL DEVELOPMENT COMPANY
805 Third Ave, 7th Floor
New York, NY 10022
TEL: 212-712-6000 FAX: 212-712-6100

ARCHITECT OF RECORD:
AAI ARCHITECTS, P.C.
14 Wall Street, 2nd Floor
New York, NY 10005
TEL: 212-964-4040 FAX: 212-964-4090

INTERIOR DESIGNER:
MEYER DAVIS
180 Varick St, suite 404
New York, NY 10014
TEL: 212-627-5574

LANDSCAPE DESIGNER:
WEST 8 URBAN DESIGN & LANDSCAPE ARCHITECTURE P.C.
333 Hudson Street, Suite 905
New York, NY 10013
TEL: 212-285-0088 FAX: 212-285-0228

STRUCTURAL ENGINEERS:
WSP
228 East 45th Street
New York, NY 10017
TEL: 212-687-9888 FAX: 646-487-5501

MEP ENGINEERS:
ICOR ASSOCIATES, LLC
485 C Route 1 South, Suite 200
Iseline, NJ 08830
TEL: 908-272-3300 FAX: 908-272-4440

GEOTECHNICAL ENGINEERS:
LANGAN ENGINEERING & ENVIRONMENTAL SERVICES
21 Penn Plaza - 360 West 31st Street, 8th Floor
New York, NY 10001
TEL: 212.479.5400 FAX: 212.479.5444

No.	DESCRIPTION:	DATE:
1	DESIGN DEVELOPMENT	10-07-14
2	STEEL BID PACKAGE	02-24-15
3	ADDENDUM #3	03-27-15
4	50% CONSTRUCTION DOCUMENTS	04-08-15
5	ADDENDUM #4	04-24-15
6	ADDENDUM #5	05-01-15
7	ADDENDUM #9	07-10-15
8	ISSUED FOR FILING	07-28-15

Discrepancies must be reported immediately to the Architect before proceeding. Only figured dimensions are to be used. Contractors must check all dimensions on site. This drawing is protected by copyright.

ALL DIMENSIONS ARE SHOWN IN IMPERIAL.

CONSULTANT:
WSP

PROJECT:
250 SOUTH STREET
NEW YORK, NY

DRAWING TITLE:
1ST FLOOR FRAMING PLAN - PART 5

SEAL & SIGNATURE:

STATE OF NEW YORK · AHMAD RAFIQUE · LICENSED PROFESSIONAL ENGINEER · No. 065527

DATE:	03/03/14
PROJECT No:	1302510
DRAWN: CAD	REV:
CHK: CL	
SCALE:	
DWG No:	**S-015.01**
DOB PAGE No:	of

DOB EMPLOYEE STAMP:

Damian Titus
BuildTech
APPROVED
Under Directive 2 of 1975
AMENDED APPLICATION
Date: 10/08/2015
NYC Development Hub

DOB B-SCAN:

FILE NAME:
PLOT DATE:

DEPT OF BLDGS 121185928 Job Number
ES2960034882 Scan Code

30" x 42" Arch E1 - SHEET SIZE

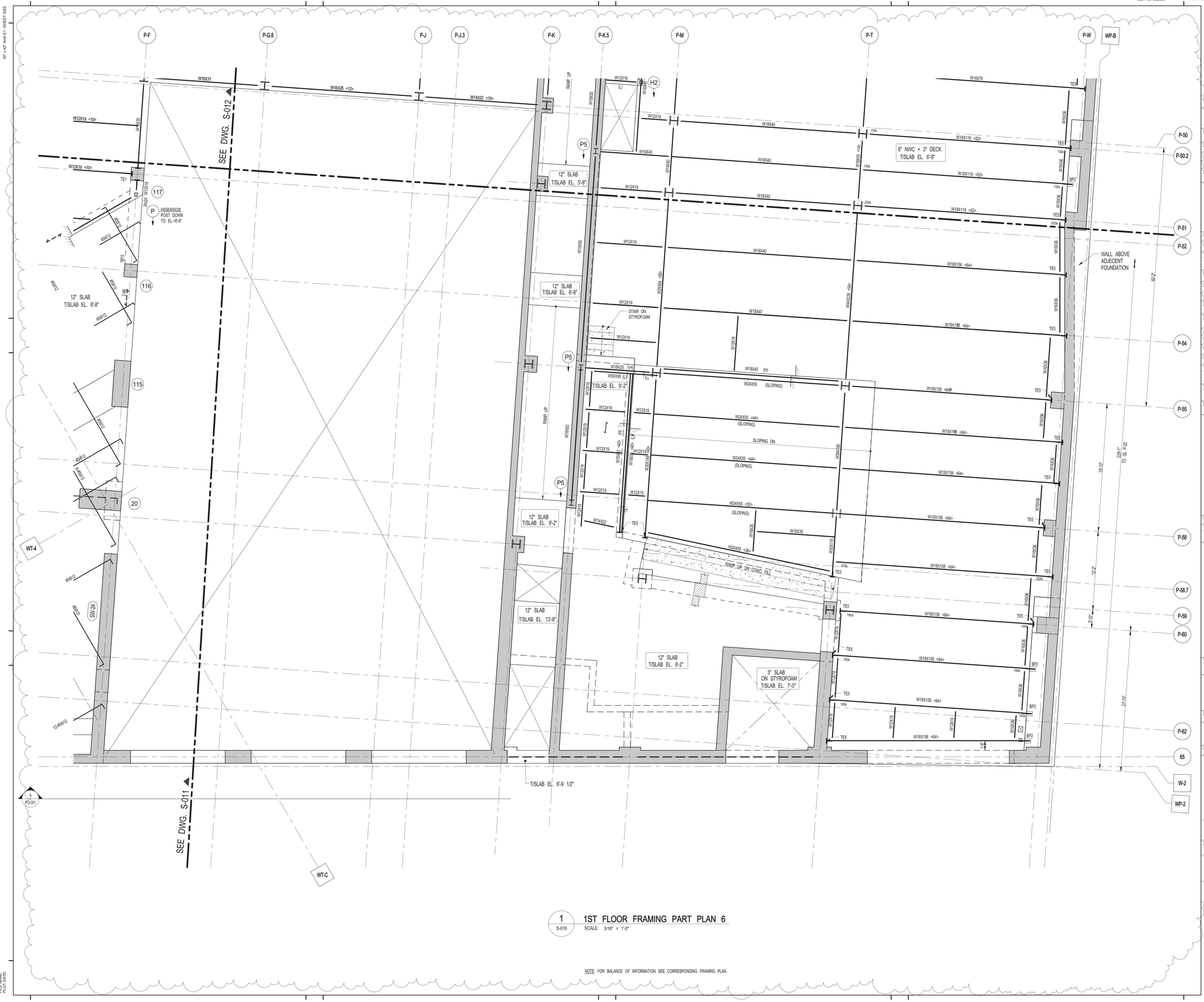

1 S-016 — 1ST FLOOR FRAMING PART PLAN 6
SCALE: 3/16" = 1'-0"

NOTE: FOR BALANCE OF INFORMATION SEE CORRESPONDING FRAMING PLAN

KEY PLAN:

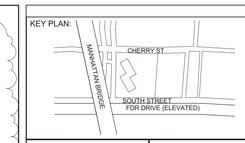

PROJECT NORTH

TRUE NORTH

DEVELOPER:
EXTELL DEVELOPMENT COMPANY
805 Third Ave, 7th Floor
New York, NY 10022
TEL: 212-712-6000 FAX: 212-712-6100

ARCHITECT OF RECORD:
AAI ARCHITECTS, P.C.
14 Wall Street, 2nd Floor
New York, NY 10005
TEL: 212-964-4040 FAX: 212-964-4090

INTERIOR DESIGNER:
MEYER DAVIS
180 Varick St, suite 404
New York, NY 10014
TEL: 212-627-5574

LANDSCAPE DESIGNER:
WEST 8 URBAN DESIGN & LANDSCAPE ARCHITECTURE P.C.
333 Hudson Street, Suite 905
New York, NY 10013
TEL: 212-285-0088 FAX: 212-285-0228

STRUCTURAL ENGINEERS:
WSP
228 East 45th Street
New York, NY 10017
TEL: 212-687-9888 FAX: 646-487-5501

MEP ENGINEERS:
ICOR ASSOCIATES, LLC
485 C Route 1 South, Suite 200
Iseline, NJ 08830
TEL: 908-272-3300 FAX: 908-272-4440

GEOTECHNICAL ENGINEERS:
LANGAN ENGINEERING & ENVIRONMENTAL SERVICES
21 Penn Plaza - 360 West 31st Street, 8th Floor
New York, NY 10001
TEL: 212.479.5400 FAX: 212.479.5444

No.	DESCRIPTION:	DATE:
1	DESIGN DEVELOPMENT	10-07-14
2	STEEL BID PACKAGE	02-24-15
3	ADDENDUM #3	03-27-15
4	50% CONSTRUCTION DOCUMENTS	04-08-15
5	ADDENDUM #4	04-24-15
6	ADDENDUM #5	05-01-15
7	ADDENDUM #9	07-10-15
8	ISSUED FOR FILING	07-28-15

Discrepancies must be reported immediately to the Architect before proceeding. Only figured dimensions are to be used. Contractors must check all dimensions on site. This drawing is protected by copyright.

ALL DIMENSIONS ARE SHOWN IN IMPERIAL.

CONSULTANT:
WSP

PROJECT:
250 SOUTH STREET
NEW YORK, NY

DRAWING TITLE:
1ST FLOOR FRAMING PLAN - PART 6

SEAL & SIGNATURE:
STATE OF NEW YORK — RICHARD RAMBOSK — No. 065657 — LICENSED PROFESSIONAL ENGINEER

DATE:	03/03/14
PROJECT No:	1302510
DRAWN: CAD	REV:
CHK: CL	
SCALE:	
DWG No:	**S-016.01**
DOB PAGE No:	of

DOB EMPLOYEE STAMP:
Damian Titus
Buildings
APPROVED
Under Directive 2 of 1975
AMENDED APPLICATION
Date: 10/08/2015
NYC Development Hub

DOB B-SCAN:

FILE NAME:
PLOT DATE:

DEPT OF BLDGS121105539 Job Number
E:5811.911667 Scan Code

30" x 42" Arch E1 - SHEET SIZE

1 S-017 PART FRAMING PLAN AT EL. 14'-5"
SCALE: 3/16" = 1'-0"

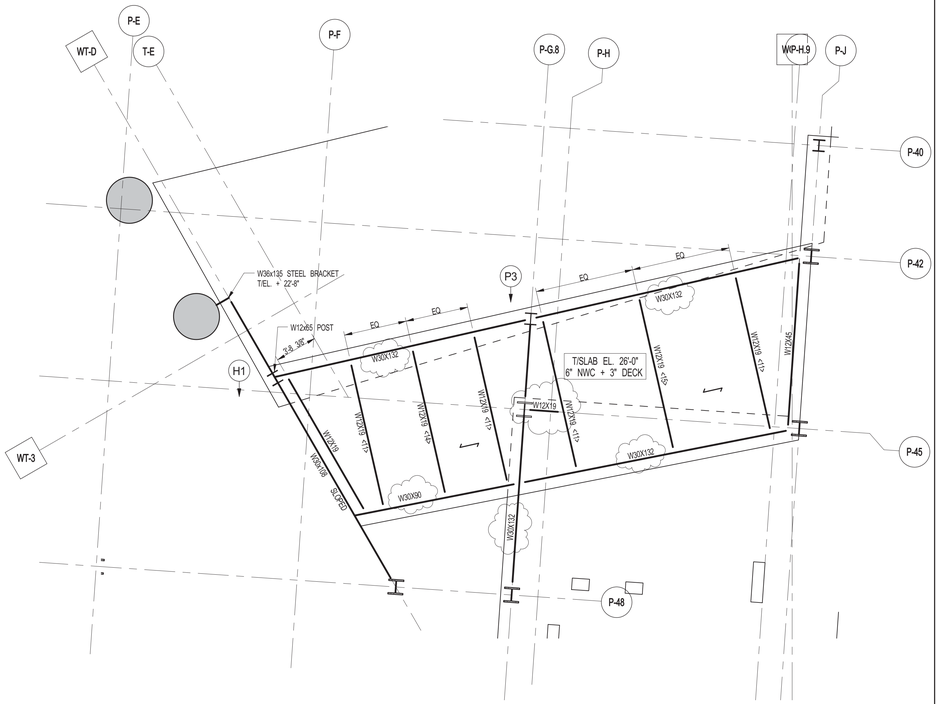

3 S-017 PART FRAMING PLAN AT EL.= 26'-0"
SCALE: 3/16" = 1'-0"

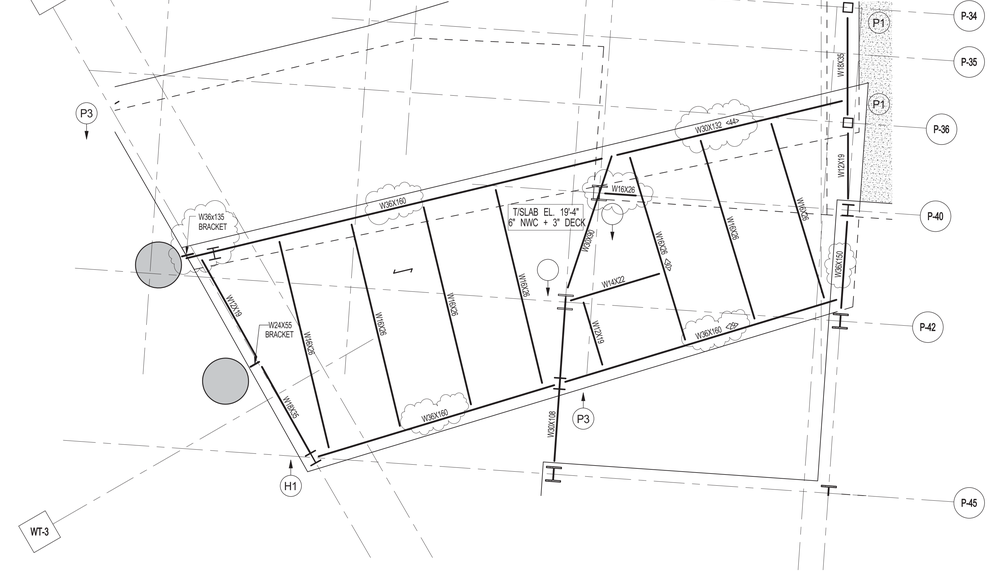

2 S-017 PART FRAMING PLAN AT EL. 19'-4"
SCALE: 3/16" = 1'-0"

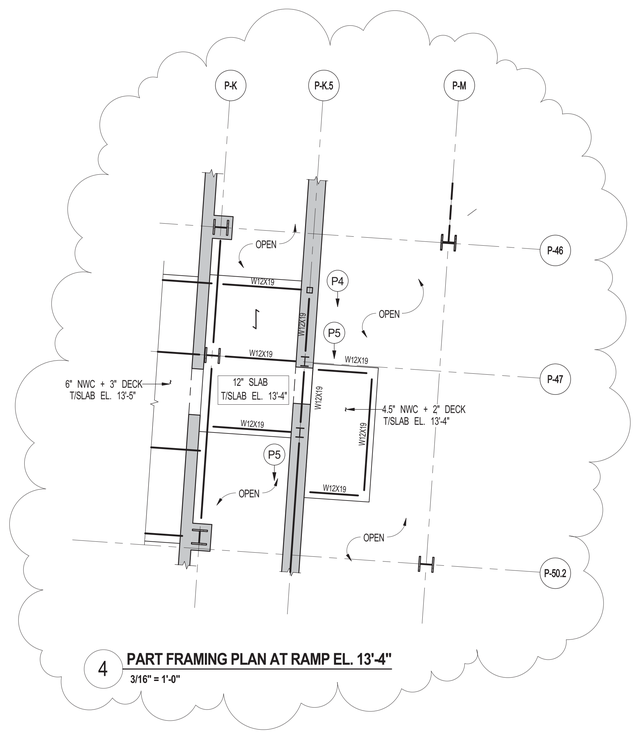

4 PART FRAMING PLAN AT RAMP EL. 13'-4"
3/16" = 1'-0"

NOTE: FOR BALANCE OF INFORMATION SEE CORRESPONDING FRAMING PLAN

KEY PLAN:

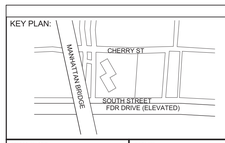

PROJECT NORTH

TRUE NORTH

DEVELOPER:
EXTELL DEVELOPMENT COMPANY
805 Third Ave, 7th Floor
New York, NY 10022
TEL: 212-712-6000 FAX: 212-712-6100

ARCHITECT OF RECORD:
AAI ARCHITECTS, P.C.
14 Wall Street, 2nd Floor
New York, NY 10005
TEL: 212-964-4040 FAX: 212-964-4090

INTERIOR DESIGNER:
MEYER DAVIS
180 Varick St, suite 404
New York, NY 10014
TEL: 212-627-5574

LANDSCAPE DESIGNER:
WEST 8 URBAN DESIGN & LANDSCAPE ARCHITECTURE P.C.
333 Hudson Street, Suite 905
New York, NY 10013
TEL: 212-285-0088 FAX: 212-285-0228

STRUCTURAL ENGINEERS:
WSP
228 East 45th Street
New York, NY 10017
TEL: 212-687-9888 FAX: 646-487-5501

MEP ENGINEERS:
ICOR ASSOCIATES, LLC
485 C Route 1 South, Suite 200
Iseline, NJ 08830
TEL: 908-272-3300 FAX: 908-272-4440

GEOTECHNICAL ENGINEERS:
LANGAN ENGINEERING & ENVIRONMENTAL SERVICES
21 Penn Plaza - 360 West 31st Street, 8th Floor
New York, NY 10001
TEL: 212.479.5400 FAX: 212.479.5444

No.	DESCRIPTION:	DATE:
1	STEEL BID PACKAGE	02-24-15
2	ADDENDUM #3	03-27-15
3	50% CONSTRUCTION DOCUMENTS	04-08-15
4	ADDENDUM #4	04-24-15
5	ISSUED FOR FILING	07-28-15

Discrepancies must be reported immediately to the Architect before proceeding. Only figured dimensions are to be used. Contractors must check all dimensions on site. This drawing is protected by copyright.

ALL DIMENSIONS ARE SHOWN IN IMPERIAL.

CONSULTANT:
WSP

PROJECT:
250 SOUTH STREET
NEW YORK, NY

DRAWING TITLE:
PART FRAMING PLANS

SEAL & SIGNATURE:
STATE OF NEW YORK · AHMAD RAYHOON · No. 085507 · LICENSED PROFESSIONAL ENGINEER

DATE: 02/24/15
PROJECT No: 1302510
DRAWN: CAD REV:
CHK: CL
SCALE: As indicated
DWG No:
S-017.01
DOB PAGE No: of

DOB EMPLOYEE STAMP:
Damian Titus
NYC Buildings
APPROVED
Under Directive 1 of 1975
AMENDED APPLICATION
Date: 10/08/2015
NYC Development Hub

DOB B-SCAN:

FILE NAME:
PLOT DATE:

DEPT OF BLDGS121185039 Job Number
E-588244886 Scan Code
30" x 42" Arch E1 - SHEET SIZE

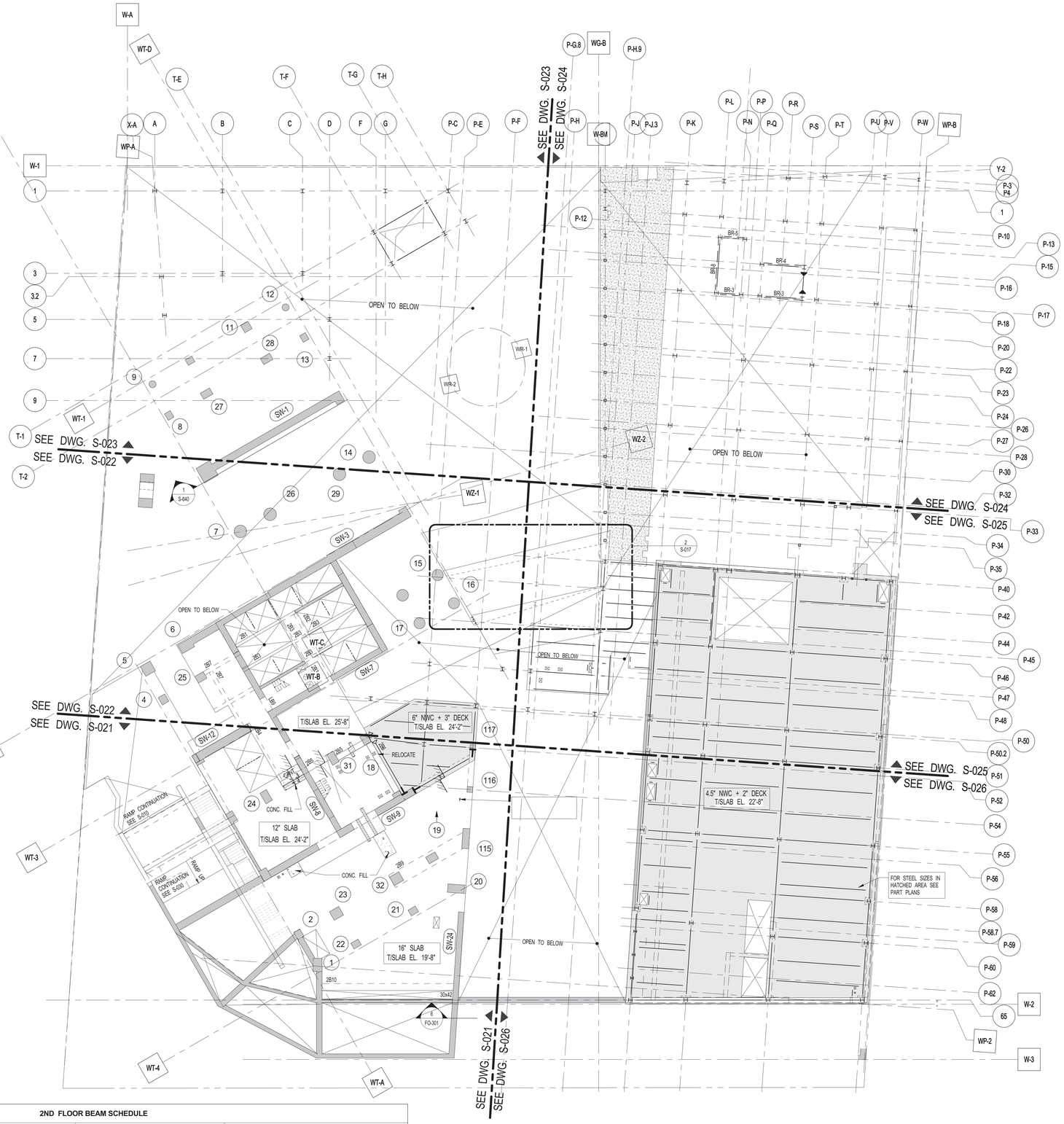

2ND FLOOR BEAM SCHEDULE

BEAM MARK	SIZE WIDTH	SIZE DEPTH	REINFORCEMENT BOTTOM CONTINUOUS	REINFORCEMENT TOP CONTINUOUS	STIRRUPS TYPE	STIRRUPS SIZE	STIRRUPS SPACING	REMARKS
2B1	12	24	2-#11	2-#11	1	#4	@6	
2B2	12	24	3-#11	2-#11	1	#4	@10	
2B3	12	24	2-#9	2-#9	1	#4	@10	
2B4	12	30	2-#10	2-#8	1	#4	@10	
2B5	24	30	4-#11	4-#9	2	#4	@12	
2B6	26	24	4-#9	4-#9	2	#4	@10	
2B7	16	26	2-#10	2-#8	1	#4	@10	
2B8	16	26	2-#8	2-#10	1	#4	@10	
2B9	60	144	60-#11 (5 LAYERS)	24-#11 (2 LAYERS)	3	#6	@8	#6@8 HORIZ. E.F., CONT. FOR BOTT. REINF. AT COL. 115 PROVIDE D6 LENTON TERMINATORS
2B10	30	42	8-#11	4-#9	2	#4	@10	
2B11	24	28	3-#10	3-#9	1	#4	@10	

TYPE 1 TYPE 2 TYPE 3

STIRRUP TYPES

1 S-020 **2ND FLOOR OVERALL FRAMING PLAN**

SCALE: 1/16" = 1'-0"

STEEL NOTES:

1. TOP OF SLAB AT STEEL CONSTRUCTION SHALL BE AS NOTED ON PLAN.
2. SLAB CONSTRUCTION SHALL BE 4 1/2" NORMAL WEIGHT CONCRETE ON TOP OF 2" 18GA. (Fay=50 KSI) COMPOSITE GALVANIZED METAL DECK (TOTAL SLAB DEPTH - 6 1/2") REINFORCED WITH #5@12 TOP E.W. + #5@12 BOTTOM (FLUTE) U.O.N.
3. STUDS SHALL BE 3/4"Ø x 5" LONG. ALL STEEL BEAMS SHALL HAVE MIN 1 STUD/FT. AP THUS <_> ON PLAN.
4. ALL BEAMS DIRECTLY CONNECTING TO COLUMNS/WALLS SHALL BE DESIGNED TO TRANSFER AN AXIAL 'FORCE' (TENSION OR COMPRESSION) OF AP = 150kips AT EACH END AP ON PLAN IN ADDITION TO ALL OTHER LOADS.
5. FOR BALANCE OF NOTES SEE DRAWING S-010.

CONCRETE NOTES:

1. TOP OF SLAB ELEVATION TO BE 25'-8" AP ON PLAN
2. FOR DETAILS OF THE INTEGRITY REINFORCEMENT SEE DRAWING S-965.
3. FOR BALANCE OF NOTES SEE DRAWING S-010.

KEY PLAN:

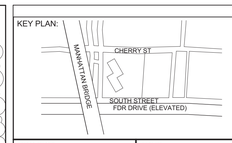

PROJECT NORTH

TRUE NORTH

DEVELOPER:
EXTELL DEVELOPMENT COMPANY
805 Third Ave, 7th Floor
New York, NY 10022
TEL: 212-712-6000 FAX: 212-712-6100

ARCHITECT OF RECORD:
AAI ARCHITECTS, P.C.
14 Wall Street, 2nd Floor
New York, NY 10005
TEL: 212-964-4040 FAX: 212-964-4090

INTERIOR DESIGNER:
MEYER DAVIS
180 Varick St, suite 404
New York, NY 10014
TEL: 212-627-5574

LANDSCAPE DESIGNER:
WEST 8 URBAN DESIGN & LANDSCAPE ARCHITECTURE P.C.
333 Hudson Street, Suite 905
New York, NY 10013
TEL: 212-285-0088 FAX: 212-285-0228

STRUCTURAL ENGINEERS:
WSP
228 East 45th Street
New York, NY 10017
TEL: 212-687-9888 FAX: 646-487-5501

MEP ENGINEERS:
ICOR ASSOCIATES, LLC
485 C Route 1 South, Suite 200
Iseline, NJ 08830
TEL: 908-272-3300 FAX: 908-272-4440

GEOTECHNICAL ENGINEERS:
LANGAN ENGINEERING & ENVIRONMENTAL SERVICES
21 Penn Plaza - 360 West 31st Street, 8th Floor
New York, NY 10001
TEL: 212.479.5400 FAX: 212.479.5444

No.	DESCRIPTION:	DATE:
1	50% SD	02-28-14
2	50% DD	08-01-14
3	DESIGN DEVELOPMENT	10-07-14
4	STEEL BID PACKAGE	02-24-15
5	CONCRETE BID PACKAGE	03-06-15
6	ADDENDUM #3	03-27-15
7	50% CONSTRUCTION DOCUMENTS	04-08-15
8	ADDENDUM #4	04-24-15
9	ADDENDUM #5	05-01-15
10	ADDENDUM #10	07-20-15
11	ISSUED FOR FILING	07-28-15

Discrepancies must be reported immediately to the Architect before proceeding. Only figured dimensions are to be used. Contractors must check all dimensions on site. This drawing is protected by copyright.

ALL DIMENSIONS ARE SHOWN IN IMPERIAL.

CONSULTANT:
WSP

PROJECT:
250 SOUTH STREET
NEW YORK, NY

DRAWING TITLE:
2ND FLOOR OVERALL FRAMING PLAN

SEAL & SIGNATURE:

DATE:	02/28/14
PROJECT No:	1302510
DRAWN: CAD	REV:
CHK: CL	
SCALE:	
DWG No:	**S-020.01**
DOB PAGE No:	of

DOB EMPLOYEE STAMP:

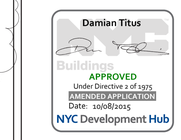

DOB B-SCAN:

FILE NAME:
PLOT DATE:

1 S-021 2ND FLOOR FRAMING PLAN - PART 1

SCALE: 3/16" = 1'-0"

NOTE: FOR BALANCE OF INFORMATION SEE CORRESPONDING FRAMING PLAN

KEY PLAN:

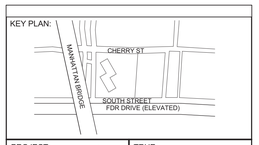

PROJECT NORTH

TRUE NORTH

DEVELOPER:
EXTELL DEVELOPMENT COMPANY
805 Third Ave, 7th Floor
New York, NY 10022
TEL: 212-712-6000 FAX: 212-712-6100

ARCHITECT OF RECORD:
AAI ARCHITECTS, P.C.
14 Wall Street, 2nd Floor
New York, NY 10005
TEL: 212-964-4040 FAX: 212-964-4090

INTERIOR DESIGNER:
MEYER DAVIS
180 Varick St, suite 404
New York, NY 10014
TEL: 212-627-5574

LANDSCAPE DESIGNER:
WEST 8 URBAN DESIGN & LANDSCAPE ARCHITECTURE P.C.
333 Hudson Street, Suite 905
New York, NY 10013
TEL: 212-285-0088 FAX: 212-285-0228

STRUCTURAL ENGINEERS:
WSP
228 East 45th Street
New York, NY 10017
TEL: 212-687-9888 FAX: 646-487-5501

MEP ENGINEERS:
ICOR ASSOCIATES, LLC
485 C Route 1 South, Suite 200
Iseline, NJ 08830
TEL: 908-272-3300 FAX: 908-272-4440

GEOTECHNICAL ENGINEERS:
LANGAN ENGINEERING & ENVIRONMENTAL SERVICES
21 Penn Plaza - 360 West 31st Street, 8th Floor
New York, NY 10001
TEL: 212.479.5400 FAX: 212.479.5444

No.	DESCRIPTION:	DATE:
1	DESIGN DEVELOPMENT	10-07-14
2	STEEL BID PACKAGE	02-24-15
3	CONCRETE BID PACKAGE	03-06-15
4	ADDENDUM #3	03-27-15
5	50% CONSTRUCTION DOCUMENTS	04-08-15
6	ADDENDUM #5	05-01-15
7	ADDENDUM #10	07-20-15
8	ISSUED FOR FILING	07-28-15

Discrepancies must be reported immediately to the Architect before proceeding. Only figured dimensions are to be used. Contractors must check all dimensions on site. This drawing is protected by copyright.

ALL DIMENSIONS ARE SHOWN IN IMPERIAL.

CONSULTANT:
WSP

PROJECT:
250 SOUTH STREET
NEW YORK, NY

DRAWING TITLE:
2ND FLOOR FRAMING PLAN - PART 1

SEAL & SIGNATURE:

STATE OF NEW YORK · AHMAD RAHIMIAN · No. 065537 · LICENSED PROFESSIONAL ENGINEER

DATE:	09/24/14
PROJECT No:	1302510
DRAWN: CAD	REV:
CHK: CL	
SCALE:	
DWG No:	S-021.01
DOB PAGE No:	of

DOB EMPLOYEE STAMP:

Damian Titus
Buildings
APPROVED
Under Directive 2 of 1975
AMENDED APPLICATION
Date: 10/08/2015
NYC Development Hub

DOB B-SCAN:

1 S-022 2ND FLOOR FRAMING PLAN - PART 2

SCALE: 3/16" = 1'-0"

NOTE: FOR BALANCE OF INFORMATION SEE CORRESPONDING FRAMING PLAN

KEY PLAN:

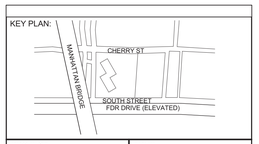

PROJECT NORTH

TRUE NORTH

DEVELOPER:
EXTELL DEVELOPMENT COMPANY
805 Third Ave, 7th Floor
New York, NY 10022
TEL: 212-712-6000 FAX: 212-712-6100

ARCHITECT OF RECORD:
AAI ARCHITECTS, P.C.
14 Wall Street, 2nd Floor
New York, NY 10005
TEL: 212-964-4040 FAX: 212-964-4090

INTERIOR DESIGNER:
MEYER DAVIS
180 Varick St, suite 404
New York, NY 10014
TEL: 212-627-5574

LANDSCAPE DESIGNER:
WEST 8 URBAN DESIGN & LANDSCAPE ARCHITECTURE P.C.
333 Hudson Street, Suite 905
New York, NY 10013
TEL: 212-285-0088 FAX: 212-285-0228

STRUCTURAL ENGINEERS:
WSP
228 East 45th Street
New York, NY 10017
TEL: 212-687-9888 FAX: 646-487-5501

MEP ENGINEERS:
ICOR ASSOCIATES, LLC
485 C Route 1 South, Suite 200
Iseline, NJ 08830
TEL: 908-272-3300 FAX: 908-272-4440

GEOTECHNICAL ENGINEERS:
LANGAN ENGINEERING & ENVIRONMENTAL SERVICES
21 Penn Plaza - 360 West 31st Street, 8th Floor
New York, NY 10001
TEL: 212.479.5400 FAX: 212.479.5444

No.	DESCRIPTION:	DATE:
1	DESIGN DEVELOPMENT	10-07-14
2	STEEL BID PACKAGE	02-24-15
3	CONCRETE BID PACKAGE	03-06-15
4	ADDENDUM #3	03-27-15
5	50% CONSTRUCTION DOCUMENTS	04-08-15
6	ADDENDUM #4	04-24-15
7	ADDENDUM #5	05-01-15
8	ADDENDUM #9	07-10-15
9	ISSUED FOR FILING	07-28-15

Discrepancies must be reported immediately to the Architect before proceeding. Only figured dimensions are to be used. Contractors must check all dimensions on site. This drawing is protected by copyright.

ALL DIMENSIONS ARE SHOWN IN IMPERIAL.

CONSULTANT:
WSP

PROJECT:
250 SOUTH STREET
NEW YORK, NY

DRAWING TITLE:
2ND FLOOR FRAMING PLAN - PART 2

SEAL & SIGNATURE:

STATE OF NEW YORK
AHMAD RAHIMIAN
No. 065537
LICENSED PROFESSIONAL ENGINEER

DATE:	09/24/14
PROJECT No:	1302510
DRAWN: CAD	REV:
CHK: CL	
SCALE:	
DWG No:	S-022.01
DOB PAGE No:	of

DOB EMPLOYEE STAMP:

Damian Titus
NYC Buildings
APPROVED
Under Directive 2 of 1975
AMENDED APPLICATION
Date: 10/08/2015
NYC Development Hub

DOB B-SCAN:

DEPT OF BLDGS121185529 Job Number
E355649695969 Scan Code
30" x 42" Arch E1 - SHEET SIZE

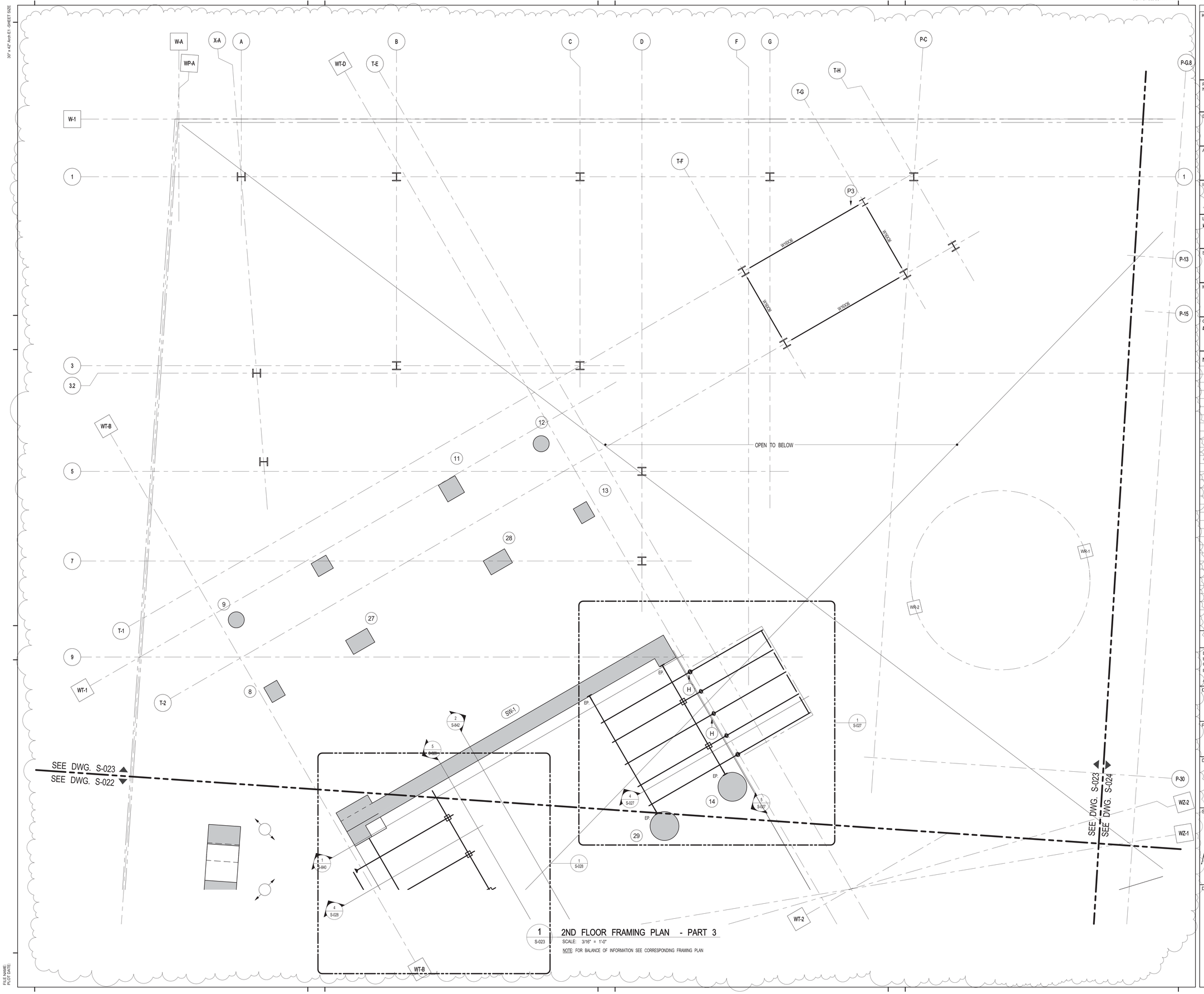

1 S-023 **2ND FLOOR FRAMING PLAN - PART 3**

SCALE: 3/16" = 1'-0"

NOTE: FOR BALANCE OF INFORMATION SEE CORRESPONDING FRAMING PLAN

FILE NAME:
PLOT DATE:

KEY PLAN:

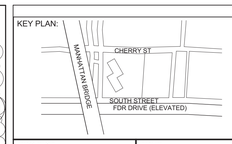

PROJECT NORTH

TRUE NORTH

DEVELOPER:
EXTELL DEVELOPMENT COMPANY
805 Third Ave, 7th Floor
New York, NY 10022
TEL: 212-712-6000 FAX: 212-712-6100

ARCHITECT OF RECORD:
AAI ARCHITECTS, P.C.
14 Wall Street, 2nd Floor
New York, NY 10005
TEL: 212-964-4040 FAX: 212-964-4090

INTERIOR DESIGNER:
MEYER DAVIS
180 Varick St, suite 404
New York, NY 10014
TEL: 212-627-5574

LANDSCAPE DESIGNER:
WEST 8 URBAN DESIGN & LANDSCAPE ARCHITECTURE P.C.
333 Hudson Street, Suite 905
New York, NY 10013
TEL: 212-285-0088 FAX: 212-285-0228

STRUCTURAL ENGINEERS:
WSP
228 East 45th Street
New York, NY 10017
TEL: 212-687-9888 FAX: 646-487-5501

MEP ENGINEERS:
ICOR ASSOCIATES, LLC
485 C Route 1 South, Suite 200
Iseline, NJ 08830
TEL: 908-272-3300 FAX: 908-272-4440

GEOTECHNICAL ENGINEERS:
LANGAN ENGINEERING & ENVIRONMENTAL SERVICES
21 Penn Plaza - 360 West 31st Street, 8th Floor
New York, NY 10001
TEL: 212.479.5400 FAX: 212.479.5444

No.	DESCRIPTION:	DATE:
1	DESIGN DEVELOPMENT	10-07-14
2	STEEL BID PACKAGE	02-24-15
3	CONCRETE BID PACKAGE	03-06-15
4	ADDENDUM #3	03-27-15
5	50% CONSTRUCTION DOCUMENTS	04-08-15
6	ADDENDUM #4	04-24-15
7	ADDENDUM #9	07-10-15
8	ISSUED FOR FILING	07-28-15

Discrepancies must be reported immediately to the Architect before proceeding. Only figured dimensions are to be used. Contractors must check all dimensions on site. This drawing is protected by copyright.

ALL DIMENSIONS ARE SHOWN IN IMPERIAL.

CONSULTANT:
WSP

PROJECT:
250 SOUTH STREET
NEW YORK, NY

DRAWING TITLE:
2ND FLOOR FRAMING PLAN - PART 3

SEAL & SIGNATURE:
STATE OF NEW YORK · AHMAD RAFIQUL · No. 065027 · LICENSED PROFESSIONAL ENGINEER

DATE:	09/24/14
PROJECT No:	1302510
DRAWN: CAD	REV:
CHK: CL	
SCALE:	
DWG No:	**S-023.01**
DOB PAGE No:	of

DOB EMPLOYEE STAMP:
Damian Titus
Buildings
APPROVED
Under Directive 2 of 1975
AMENDED APPLICATION
Date: 10/08/2015
NYC Development Hub

DOB B-SCAN:

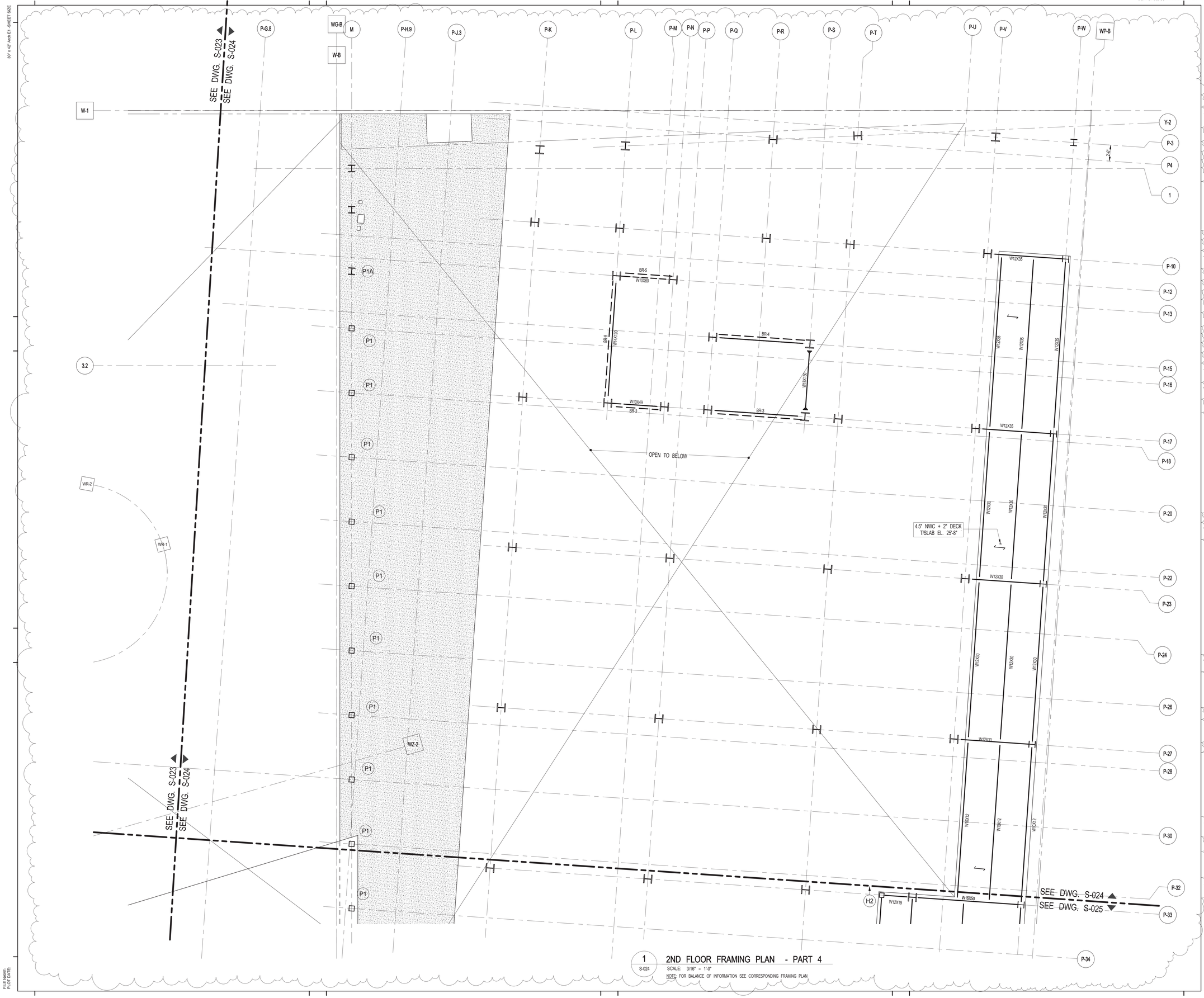

1 S-024 2ND FLOOR FRAMING PLAN - PART 4

SCALE: 3/16" = 1'-0"

NOTE: FOR BALANCE OF INFORMATION SEE CORRESPONDING FRAMING PLAN

KEY PLAN:

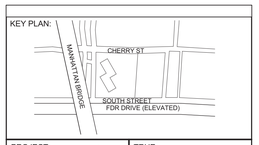

PROJECT NORTH

TRUE NORTH

DEVELOPER:
EXTELL DEVELOPMENT COMPANY
805 Third Ave, 7th Floor
New York, NY 10022
TEL: 212-712-6000 FAX: 212-712-6100

ARCHITECT OF RECORD:
AAI ARCHITECTS, P.C.
14 Wall Street, 2nd Floor
New York, NY 10005
TEL: 212-964-4040 FAX: 212-964-4090

INTERIOR DESIGNER:
MEYER DAVIS
180 Varick St, suite 404
New York, NY 10014
TEL: 212-627-5574

LANDSCAPE DESIGNER:
WEST 8 URBAN DESIGN & LANDSCAPE ARCHITECTURE P.C.
333 Hudson Street, Suite 905
New York, NY 10013
TEL: 212-285-0088 FAX: 212-285-0228

STRUCTURAL ENGINEERS:
WSP
228 East 45th Street
New York, NY 10017
TEL: 212-687-9888 FAX: 646-487-5501

MEP ENGINEERS:
ICOR ASSOCIATES, LLC
485 C Route 1 South, Suite 200
Iseline, NJ 08830
TEL: 908-272-3300 FAX: 908-272-4440

GEOTECHNICAL ENGINEERS:
LANGAN ENGINEERING & ENVIRONMENTAL SERVICES
21 Penn Plaza - 360 West 31st Street, 8th Floor
New York, NY 10001
TEL: 212.479.5400 FAX: 212.479.5444

No.	DESCRIPTION:	DATE:
1	DESIGN DEVELOPMENT	10-07-14
2	STEEL BID PACKAGE	02-24-15
3	ADDENDUM #3	03-27-15
4	50% CONSTRUCTION DOCUMENTS	04-08-15
5	ADDENDUM #4	04-24-15
6	ADDENDUM #10	07-20-15
7	ISSUED FOR FILING	07-28-15

Discrepancies must be reported immediately to the Architect before proceeding. Only figured dimensions are to be used. Contractors must check all dimensions on site. This drawing is protected by copyright.

ALL DIMENSIONS ARE SHOWN IN IMPERIAL.

CONSULTANT:
WSP

PROJECT:
250 SOUTH STREET
NEW YORK, NY

DRAWING TITLE:
2ND FLOOR FRAMING PLAN - PART 4

SEAL & SIGNATURE:

STATE OF NEW YORK
AHMAD RAHIMIAN
No. 065537
LICENSED PROFESSIONAL ENGINEER

DATE:	09/24/14
PROJECT No:	1302510
DRAWN: CAD	REV:
CHK: CL	
SCALE:	
DWG No:	S-024.01
DOB PAGE No:	of

DOB EMPLOYEE STAMP:

Damian Titus
Buildings
APPROVED
Under Directive 2 of 1975
AMENDED APPLICATION
Date: 10/08/2015
NYC Development Hub

DOB B-SCAN:

FILE NAME:
PLOT DATE:

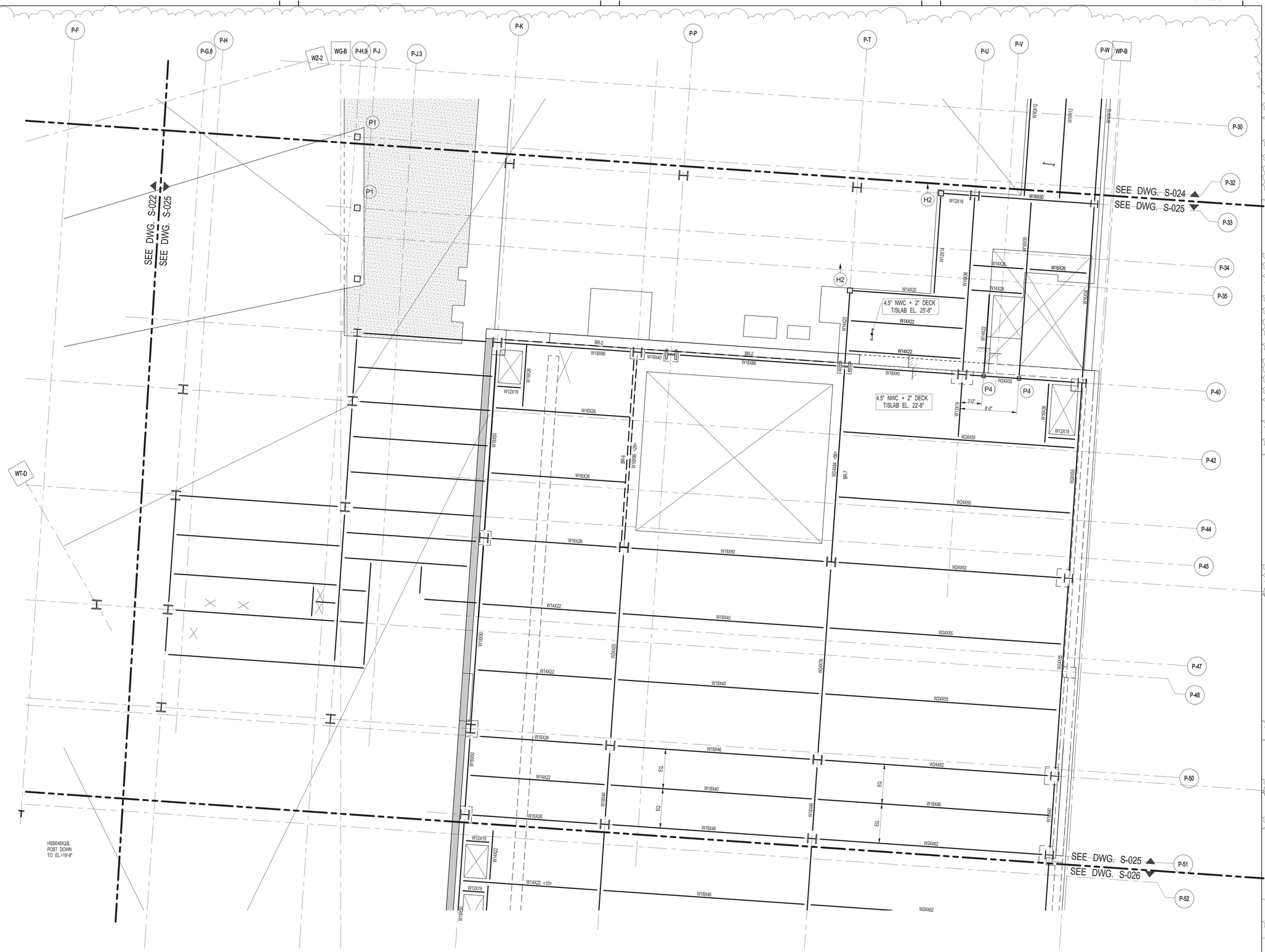

1 S-025 2ND FLOOR FRAMING PLAN - PART 5
SCALE: 3/16" = 1'-0"

NOTE: FOR BALANCE OF INFORMATION SEE CORRESPONDING FRAMING PLAN

KEY PLAN:

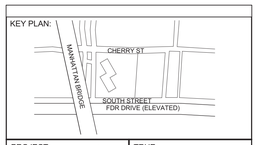

PROJECT NORTH

TRUE NORTH

DEVELOPER:
EXTELL DEVELOPMENT COMPANY
805 Third Ave, 7th Floor
New York, NY 10022
TEL: 212-712-6000 FAX: 212-712-6100

ARCHITECT OF RECORD:
AAI ARCHITECTS, P.C.
14 Wall Street, 2nd Floor
New York, NY 10005
TEL: 212-964-4040 FAX: 212-964-4090

INTERIOR DESIGNER:
MEYER DAVIS
180 Varick St, suite 404
New York, NY 10014
TEL: 212-627-5574

LANDSCAPE DESIGNER:
WEST 8 URBAN DESIGN & LANDSCAPE ARCHITECTURE P.C.
333 Hudson Street, Suite 905
New York, NY 10013
TEL: 212-285-0088 FAX: 212-285-0228

STRUCTURAL ENGINEERS:
WSP
228 East 45th Street
New York, NY 10017
TEL: 212-687-9888 FAX: 646-487-5501

MEP ENGINEERS:
ICOR ASSOCIATES, LLC
485 C Route 1 South, Suite 200
Iseline, NJ 08830
TEL: 908-272-3300 FAX: 908-272-4440

GEOTECHNICAL ENGINEERS:
LANGAN ENGINEERING & ENVIRONMENTAL SERVICES
21 Penn Plaza - 360 West 31st Street, 8th Floor
New York, NY 10001
TEL: 212.479.5400 FAX: 212.479.5444

No.	DESCRIPTION:	DATE:
1	DESIGN DEVELOPMENT	10-07-14
2	STEEL BID PACKAGE	02-24-15
3	ADDENDUM #3	03-27-15
4	50% CONSTRUCTION DOCUMENTS	04-08-15
5	ADDENDUM #4	04-24-15
6	ISSUED FOR FILING	07-28-15

Discrepancies must be reported immediately to the Architect before proceeding. Only figured dimensions are to be used. Contractors must check all dimensions on site. This drawing is protected by copyright.

ALL DIMENSIONS ARE SHOWN IN IMPERIAL.

CONSULTANT:
WSP

PROJECT:
250 SOUTH STREET
NEW YORK, NY

DRAWING TITLE:
2ND FLOOR FRAMING PLAN - PART 5

SEAL & SIGNATURE:
STATE OF NEW YORK · AMMAD RAHIMIAN · No. 065537 · LICENSED PROFESSIONAL ENGINEER

DATE:	09/24/14
PROJECT No:	1302510
DRAWN: CAD	REV:
CHK: CL	
SCALE:	
DWG No:	S-025.01
DOB PAGE No:	of

DOB EMPLOYEE STAMP:
Damian Titus
NYC Buildings
APPROVED
Under Directive 2 of 1975
AMENDED APPLICATION
Date: 10/08/2015
NYC Development Hub

DOB B-SCAN:

FILE NAME:
PLOT DATE:

DEPT OF BLDGS 121185539 Job Number
ES1765314X4 Scan Code
30" x 42" Arch E1 - SHEET SIZE

P-G.8 | P-H.9 | WG-B | P-K | P-P | P-T | P-W | WP-B

P-50.2 | P-51 | P-52 | P-54 | P-55 | P-56 | P-58 | P-58.7 | P-59 | P-60 | P-62 | 65 | W-2 | WP-2 | W-3

SEE DWG. S-025
SEE DWG. S-026

T
24x28
HSS6X6X3/8
POST DOWN
TO EL.+19'-8"

TE1

OPEN TO BELOW

4.5" NWC + 2" DECK
T/SLAB EL. 22'-8"

10
S-970

1
S-930

6
FO-301

SEE DWG. S-021
SEE DWG. S-026

WT-C

W15X50 | W14X22 | W18X40 | EQ | W18X40 | EQ | W18X40 | W24X62 | W18X46 | W18X40 | W18X46 | W24X62 | W12X19 | W16X26 | W14X22 | W18X46 | W24X62 | W14X22 <10> | W18X46 | W24X62 | W24X76 | W24X55 | W18X46 | W24X55 | W18X50 | W16X26 | W18X130 | W18X55 | W18X86 | W24X76 | W24X55 | W18X55 | W18X130 <5D> | W12X19 | W18X55 | W18X86 | W18X86 | W18X55

1 S-026 2ND FLOOR FRAMING PLAN - PART 6

SCALE: 3/16" = 1'-0"

NOTE: FOR BALANCE OF INFORMATION SEE CORRESPONDING FRAMING PLAN

FILE NAME:
PLOT DATE:

KEY PLAN:

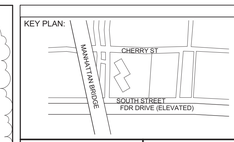

PROJECT NORTH | TRUE NORTH

DEVELOPER:
EXTELL DEVELOPMENT COMPANY
805 Third Ave, 7th Floor
New York, NY 10022
TEL: 212-712-6000 FAX: 212-712-6100

ARCHITECT OF RECORD:
AAI ARCHITECTS, P.C.
14 Wall Street, 2nd Floor
New York, NY 10005
TEL: 212-964-4040 FAX: 212-964-4090

INTERIOR DESIGNER:
MEYER DAVIS
180 Varick St, suite 404
New York, NY 10014
TEL: 212-627-5574

LANDSCAPE DESIGNER:
WEST 8 URBAN DESIGN & LANDSCAPE ARCHITECTURE P.C.
333 Hudson Street, Suite 905
New York, NY 10013
TEL: 212-285-0088 FAX: 212-285-0228

STRUCTURAL ENGINEERS:
WSP
228 East 45th Street
New York, NY 10017
TEL: 212-687-9888 FAX: 646-487-5501

MEP ENGINEERS:
ICOR ASSOCIATES, LLC
485 C Route 1 South, Suite 200
Iseline, NJ 08830
TEL: 908-272-3300 FAX: 908-272-4440

GEOTECHNICAL ENGINEERS:
LANGAN ENGINEERING & ENVIRONMENTAL SERVICES
21 Penn Plaza - 360 West 31st Street, 8th Floor
New York, NY 10001
TEL: 212.479.5400 FAX: 212.479.5444

No.	DESCRIPTION:	DATE:
1	DESIGN DEVELOPMENT	10-07-14
2	STEEL BID PACKAGE	02-24-15
3	ADDENDUM #3	03-27-15
4	50% CONSTRUCTION DOCUMENTS	04-08-15
5	ADDENDUM #4	04-24-15
6	ISSUED FOR FILING	07-28-15

Discrepancies must be reported immediately to the Architect before proceeding. Only figured dimensions are to be used. Contractors must check all dimensions on site. This drawing is protected by copyright.

ALL DIMENSIONS ARE SHOWN IN IMPERIAL.

CONSULTANT: WSP

PROJECT:
250 SOUTH STREET
NEW YORK, NY

DRAWING TITLE:
2ND FLOOR FRAMING PLAN - PART 6

SEAL & SIGNATURE:
STATE OF NEW YORK · AHMAD RAHIMIAN · No. 065527 · LICENSED PROFESSIONAL ENGINEER

DATE:	09/24/14
PROJECT No:	1302510
DRAWN: CAD	REV:
CHK: CL	
SCALE:	
DWG No:	**S-026.01**
DOB PAGE No:	of

DOB EMPLOYEE STAMP:
Damian Titus
BuildingConnected
APPROVED
Under Directive 2 of 1975
AMENDED APPLICATION
Date: 10/08/2015
NYC Development Hub

DOB B-SCAN:

DEPT OF BLDGS121185528 Job Number
ES7887212294 Scan Code

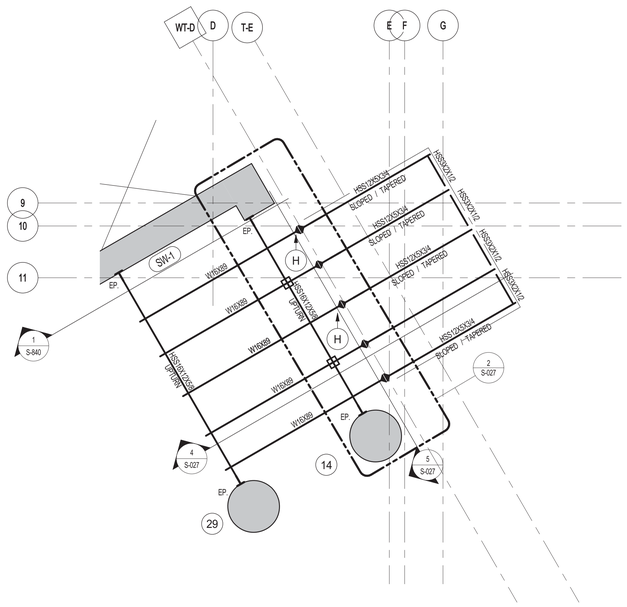

1 S-027 LOBBY CANOPY FRAMING PLAN
SCALE: 3/16" = 1'-0"

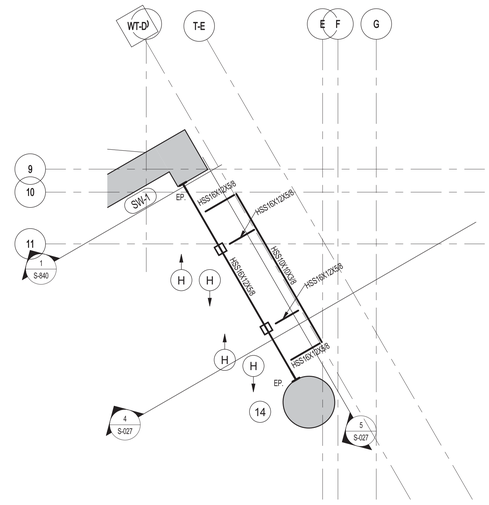

2 S-027 INTERMEDIATE LOBBY FRAMING PLAN
SCALE: 3/16" = 1'-0"

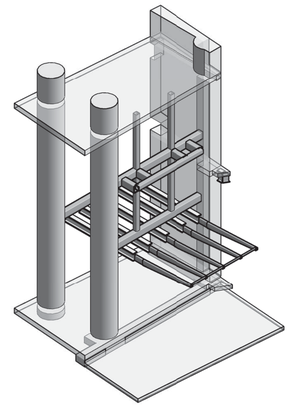

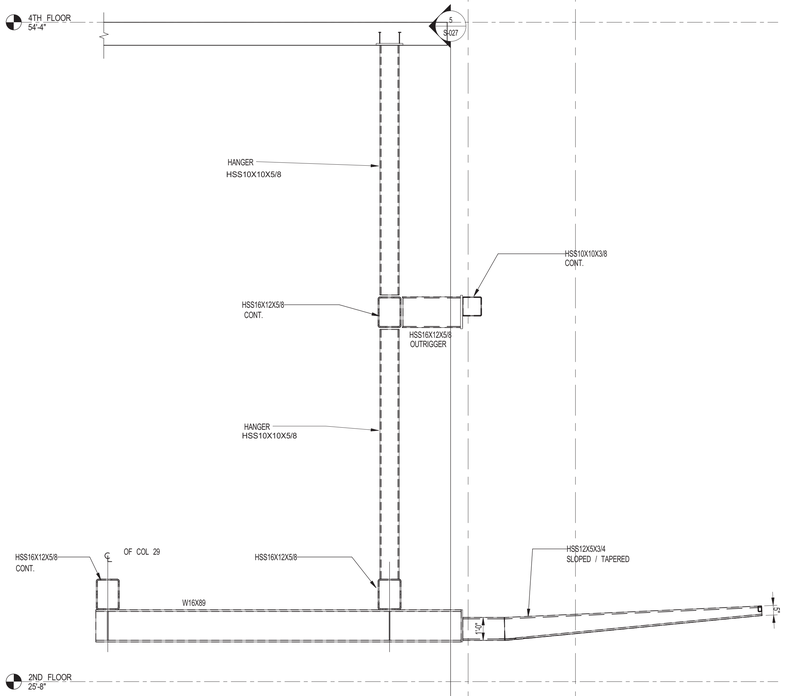

4 S-027 SECTION
SCALE: 3/8" = 1'-0"

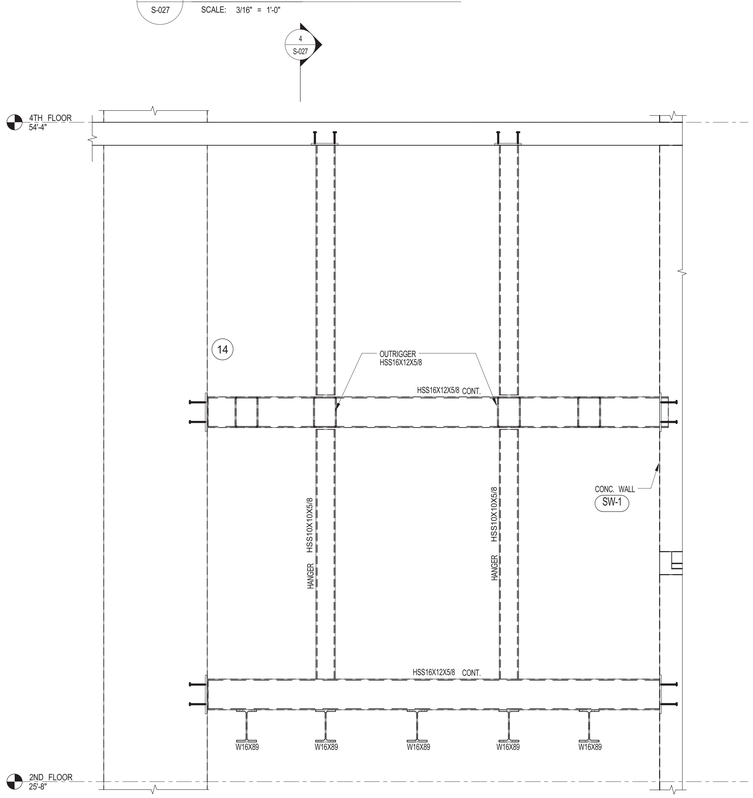

5 S-027 SECTION
SCALE: 3/8" = 1'-0"

KEY PLAN:

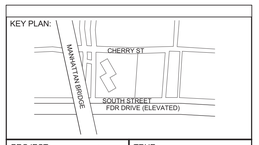

PROJECT NORTH

TRUE NORTH

DEVELOPER:
EXTELL DEVELOPMENT COMPANY
805 Third Ave, 7th Floor
New York, NY 10022
TEL: 212-712-6000 FAX: 212-712-6100

ARCHITECT OF RECORD:
AAI ARCHITECTS, P.C.
14 Wall Street, 2nd Floor
New York, NY 10005
TEL: 212-964-4040 FAX: 212-964-4090

INTERIOR DESIGNER:
MEYER DAVIS
180 Varick St, suite 404
New York, NY 10014
TEL: 212-627-5574

LANDSCAPE DESIGNER:
WEST 8 URBAN DESIGN & LANDSCAPE ARCHITECTURE P.C.
333 Hudson Street, Suite 905
New York, NY 10013
TEL: 212-285-0088 FAX: 212-285-0228

STRUCTURAL ENGINEERS:
WSP
228 East 45th Street
New York, NY 10017
TEL: 212-687-9888 FAX: 646-487-5501

MEP ENGINEERS:
ICOR ASSOCIATES, LLC
485 C Route 1 South, Suite 200
Iseline, NJ 08830
TEL: 908-272-3300 FAX: 908-272-4440

GEOTECHNICAL ENGINEERS:
LANGAN ENGINEERING & ENVIRONMENTAL SERVICES
21 Penn Plaza - 360 West 31st Street, 8th Floor
New York, NY 10001
TEL: 212.479.5400 FAX: 212.479.5444

No.	DESCRIPTION:	DATE:
1	ADDENDUM #9	07-10-15
2	ISSUED FOR FILING	07-28-15

Discrepancies must be reported immediately to the Architect before proceeding. Only figured dimensions are to be used. Contractors must check all dimensions on site. This drawing is protected by copyright.

ALL DIMENSIONS ARE SHOWN IN IMPERIAL.

CONSULTANT:
WSP

PROJECT:
250 SOUTH STREET
NEW YORK, NY

DRAWING TITLE:
FRAMING PLAN OF CANOPY AT LOBBY EAST

SEAL & SIGNATURE:

DATE:	07/08/15
PROJECT No:	1302510
DRAWN: CAD	REV:
CHK: CL	
SCALE: As indicated	
DWG No:	S-027.00
DOB PAGE No:	of

DOB EMPLOYEE STAMP:

DOB B-SCAN:

30" x 42" Arch E1 - SHEET SIZE

FILE NAME:
PLOT DATE:

DEPT OF BLDGS121105639 Job Number
IES1758059239 Scan Code
30" x 42" Arch E1 - SHEET SIZE

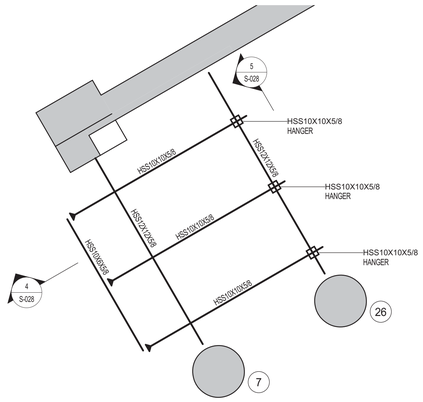

1 S-028 WEST CANOPY FRAMING PLAN @ 2ND FL
SCALE: 3/16" = 1'-0"

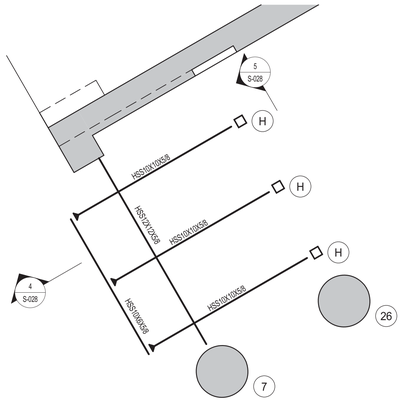

2 S-028 WEST CANOPY FRAMING PLAN @ 3RD FL
SCALE: 3/16" = 1'-0"

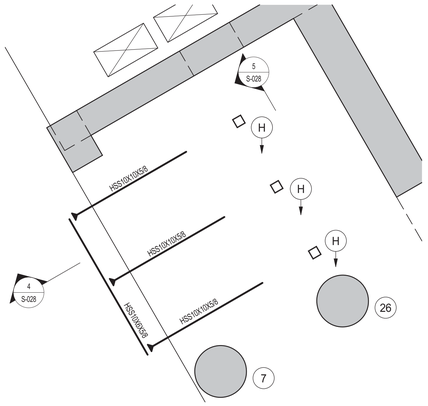

3 S-028 WEST CANOPY FRAMING PLAN @ 4TH FL
SCALE: 3/16" = 1'-0"

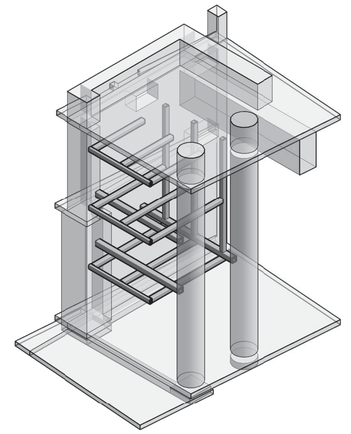

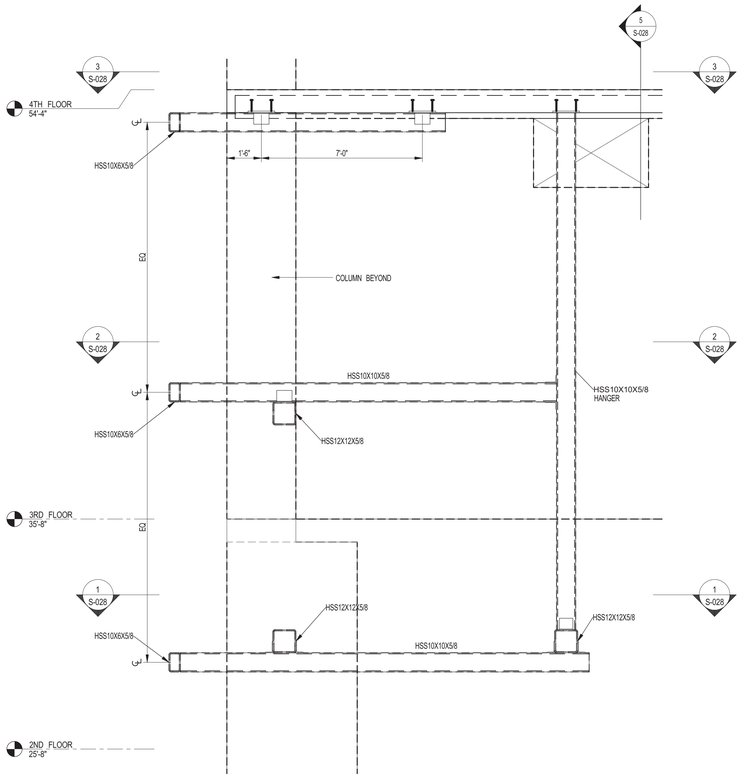

4 S-028 SECTION
SCALE: 3/8" = 1'-0"

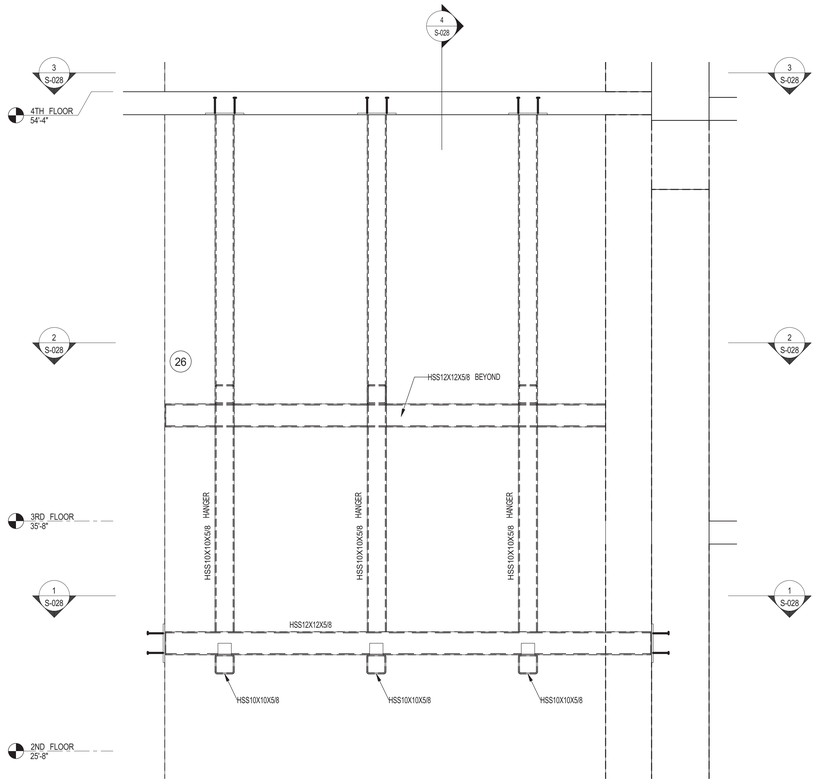

5 S-028 SECTION
SCALE: 3/8" = 1'-0"

KEY PLAN:

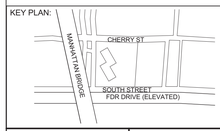

PROJECT NORTH

TRUE NORTH

DEVELOPER:
EXTELL DEVELOPMENT COMPANY
805 Third Ave, 7th Floor
New York, NY 10022
TEL: 212-712-6000 FAX: 212-712-6100

ARCHITECT OF RECORD:
AAI ARCHITECTS, P.C.
14 Wall Street, 2nd Floor
New York, NY 10005
TEL: 212-964-4040 FAX: 212-964-4090

INTERIOR DESIGNER:
MEYER DAVIS
180 Varick St, suite 404
New York, NY 10014
TEL: 212-627-5574

LANDSCAPE DESIGNER:
WEST 8 URBAN DESIGN & LANDSCAPE ARCHITECTURE P.C.
333 Hudson Street, Suite 905
New York, NY 10013
TEL: 212-285-0088 FAX: 212-285-0228

STRUCTURAL ENGINEERS:
WSP
228 East 45th Street
New York, NY 10017
TEL: 212-687-9888 FAX: 646-487-5501

MEP ENGINEERS:
ICOR ASSOCIATES, LLC
485 C Route 1 South, Suite 200
Iseline, NJ 08830
TEL: 908-272-3300 FAX: 908-272-4440

GEOTECHNICAL ENGINEERS:
LANGAN ENGINEERING & ENVIRONMENTAL SERVICES
21 Penn Plaza - 360 West 31st Street, 8th Floor
New York, NY 10001
TEL: 212.479.5400 FAX: 212.479.5444

No.	DESCRIPTION:	DATE:
1	ADDENDUM #9	07-10-15
2	ISSUED FOR FILING	07-28-15

Discrepancies must be reported immediately to the Architect before proceeding. Only figured dimensions are to be used. Contractors must check all dimensions on site. This drawing is protected by copyright.

ALL DIMENSIONS ARE SHOWN IN IMPERIAL.

CONSULTANT:
WSP

PROJECT:
250 SOUTH STREET
NEW YORK, NY

DRAWING TITLE:
FRAMING PLAN OF CANOPY AT LOBBY WEST

SEAL & SIGNATURE:
STATE OF NEW YORK ARMAD RAYBOON No. 085527 LICENSED PROFESSIONAL ENGINEER

DATE:	07/09/15
PROJECT No:	1302510
DRAWN: CAD	REV:
CHK: CL	
SCALE: As indicated	
DWG No:	**S-028.00**
DOB PAGE No:	of

DOB EMPLOYEE STAMP:
Damian Titus
NYC Buildings
APPROVED
Under Directive 2 of 1975
AMENDED APPLICATION
Date: 10/08/2015
NYC Development Hub

DOB B-SCAN:

FILE NAME:
PLOT DATE:

DEPT OF BLDGS121185539 Job Number
E-58111396437 Scan Code
30" x 42" Arch E1 - SHEET SIZE

3RD FLOOR BEAM SCHEDULE

BEAM MARK	SIZE WIDTH	SIZE DEPTH	REINFORCEMENT BOTTOM CONTINUOUS	REINFORCEMENT TOP CONTINUOUS	STIRRUPS TYPE	STIRRUPS SIZE	STIRRUPS SPACING	REMARKS
3B1	26	30						
3B2	26	30						
3B3	18	30						
3B4	32	30						
3B5	26	36	6-#11	4-#11	2	#4	@12	#5@9 HORIZ. E.F., CONT.
3B6	30	30	6-#11	6-#10	2	#4	@10	
3B7	24	30	5-#11	4-#10	2	#4	@9	

CONCRETE NOTES:

1. TOP OF SLAB ELEVATION SEE PLAN
2. SLAB TO BE 12" THICK U.O.N. THUS ___ ON PLAN.
3. BOTTOM REINFORCEMENT TO BE #5@12 CONT. E.W. FOR 12" SLAB, FOR ADDITIONAL REINFORCEMENT SEE PLAN
4. FOR DETAILS OF THE INTEGRITY REINFORCEMENT SEE DRAWING S-965.
5. FOR BALANCE OF NOTES SEE DRAWING S-010.

1 S-030 — 3RD FLOOR OVERALL FRAMING PLAN

SCALE: 1/16" = 1'-0"

STEEL NOTES:

1. TOP OF SLAB AT STEEL CONSTRUCTION SHALL BE AS NOTED ON PLAN.
2. SLAB CONSTRUCTION SHALL BE 0" NORMAL WEIGHT CONCRETE ON TOP OF 3" 18GA. (Fy=50 KSI) COMPOSITE GALVANIZED METAL DECK (TOTAL SLAB DEPTH - 9") REINF. WITH #4@12 TOP E.W. + #4@12 BOTTOM (FLUTE) AND 4 1/2" + 2" DECK SHALL BE 4 1/2" NORMAL WEIGTH CONC. ON 2" 18GA (Fy= 50ksi) COMPOSITE GALVANIZED METAL DECK (TOTAL SLAB DEPTH = 6 1/2") REINF. WITH #5@12 TOP E.W. + #5@12 BOTTOM (FLUTE)
3. STUDS SHALL BE 3/4" Ø x 6" LONG. ALL STEEL BEAMS SHALL HAVE MIN 1 STUD/FT. U.O.N. THUS <..> ON PLAN.
4. ALL BEAMS DIRECTLY CONNECTING TO COLUMNS/WALLS SHALL BE DESIGNED TO TRANSFER AN AXIAL FORCE' (TENSION OR COMPRESSION) OF P = 150kps. AT EACH END U.O.N. ON PLAN IN ADDITION TO ALL OTHER LOADS.
5. FOR TRUSS ELEVATIONS SEE S-930_SERIES DRAWINGS.
6. FOR BALANCE OF NOTES SEE DRAWING S-010.

KEY PLAN:

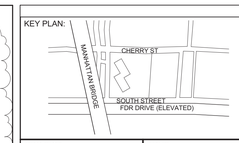

PROJECT NORTH | TRUE NORTH

DEVELOPER:
EXTELL DEVELOPMENT COMPANY
805 Third Ave, 7th Floor
New York, NY 10022
TEL: 212-712-6000 FAX: 212-712-6100

ARCHITECT OF RECORD:
AAI ARCHITECTS, P.C.
14 Wall Street, 2nd Floor
New York, NY 10005
TEL: 212-964-4040 FAX: 212-964-4090

INTERIOR DESIGNER:
MEYER DAVIS
180 Varick St, suite 404
New York, NY 10014
TEL: 212-627-5574

LANDSCAPE DESIGNER:
WEST 8 URBAN DESIGN & LANDSCAPE ARCHITECTURE P.C.
333 Hudson Street, Suite 905
New York, NY 10013
TEL: 212-285-0088 FAX: 212-285-0228

STRUCTURAL ENGINEERS:
WSP
228 East 45th Street
New York, NY 10017
TEL: 212-687-9888 FAX: 646-487-5501

MEP ENGINEERS:
ICOR ASSOCIATES, LLC
485 C Route 1 South, Suite 200
Iseline, NJ 08830
TEL: 908-272-3300 FAX: 908-272-4440

GEOTECHNICAL ENGINEERS:
LANGAN ENGINEERING & ENVIRONMENTAL SERVICES
21 Penn Plaza - 360 West 31st Street, 8th Floor
New York, NY 10001
TEL: 212.479.5400 FAX: 212.479.5444

No.	DESCRIPTION:	DATE:
1	50% SD	02-28-14
2	100%SD	04-25-14
3	50% DD	08-01-14
4	DESIGN DEVELOPMENT	10-07-14
5	STEEL BID PACKAGE	02-24-15
6	CONCRETE BID PACKAGE	03-06-15
7	ADDENDUM #3	03-27-15
8	50% CONSTRUCTION DOCUMENTS	04-08-15
9	ADDENDUM #4	04-24-15
10	ADDENDUM #10	07-20-15
11	ISSUED FOR FILING	07-28-15

Discrepancies must be reported immediately to the Architect before proceeding. Only figured dimensions are to be used. Contractors must check all dimensions on site. This drawing is protected by copyright.

ALL DIMENSIONS ARE SHOWN IN IMPERIAL.

CONSULTANT: WSP

PROJECT:
250 SOUTH STREET
NEW YORK, NY

DRAWING TITLE:
3RD FLOOR OVERALL FRAMING PLAN

SEAL & SIGNATURE:

DATE:	02/28/14
PROJECT No:	1302510
DRAWN: CAD	REV:
CHK: CL	
SCALE:	
DWG No:	**S-030.01**
DOB PAGE No:	of

DOB EMPLOYEE STAMP:

Damian Titus
Buildings
APPROVED
Under Directive 2 of 1975
AUTOMATED APPLICATION
Date: 10/08/2015
NYC Development Hub

DOB B-SCAN:

FILE NAME:
PLOT DATE:

121185528 Job Number
ES405401005 Scan Code

1 S-031 3RD FLOOR FRAMING PLAN - PART 1
SCALE: 3/16" = 1'-0"
NOTE: FOR BALANCE OF INFORMATION SEE CORRESPONDING FRAMING PLAN

KEY PLAN:

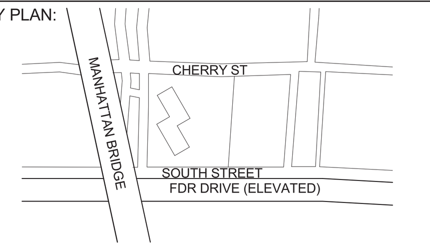

PROJECT NORTH

TRUE NORTH

DEVELOPER:
EXTELL DEVELOPMENT COMPANY
805 Third Ave, 7th Floor
New York, NY 10022
TEL: 212-712-6000 FAX: 212-712-6100

ARCHITECT OF RECORD:
AAI ARCHITECTS, P.C.
14 Wall Street, 2nd Floor
New York, NY 10005
TEL: 212-964-4040 FAX: 212-964-4090

INTERIOR DESIGNER:
MEYER DAVIS
180 Varick St, suite 404
New York, NY 10014
TEL: 212-627-5574

LANDSCAPE DESIGNER:
WEST 8 URBAN DESIGN & LANDSCAPE ARCHITECTURE P.C.
333 Hudson Street, Suite 905
New York, NY 10013
TEL: 212-285-0088 FAX: 212-285-0228

STRUCTURAL ENGINEERS:
WSP
228 East 45th Street
New York, NY 10017
TEL: 212-687-9888 FAX: 646-487-5501

MEP ENGINEERS:
ICOR ASSOCIATES, LLC
485 C Route 1 South, Suite 200
Iseline, NJ 08830
TEL: 908-272-3300 FAX: 908-272-4440

GEOTECHNICAL ENGINEERS:
LANGAN ENGINEERING & ENVIRONMENTAL SERVICES
21 Penn Plaza - 360 West 31st Street, 8th Floor
New York, NY 10001
TEL: 212.479.5400 FAX: 212.479.5444

No.	DESCRIPTION:	DATE:
1	DESIGN DEVELOPMENT	10-07-14
2	STEEL BID PACKAGE	02-24-15
3	CONCRETE BID PACKAGE	03-06-15
4	ADDENDUM #3	03-27-15
5	50% CONSTRUCTION DOCUMENTS	04-08-15
6	ADDENDUM #10	07-20-15
7	ISSUED FOR FILING	07-28-15

Discrepancies must be reported immediately to the Architect before proceeding. Only figured dimensions are to be used. Contractors must check all dimensions on site. This drawing is protected by copyright.

ALL DIMENSIONS ARE SHOWN IN IMPERIAL.

CONSULTANT:
WSP

PROJECT:
250 SOUTH STREET
NEW YORK, NY

DRAWING TITLE:
3RD FLOOR FRAMING PLAN - PART 1

SEAL & SIGNATURE:
STATE OF NEW YORK · AHMAD RAHIMIAN · No. 065537 · LICENSED PROFESSIONAL ENGINEER

DATE:	09/24/14
PROJECT No:	1302510
DRAWN:	CAD
CHK:	CL
SCALE:	
REV:	
DWG No:	**S-031.01**
DOB PAGE No:	of

DOB EMPLOYEE STAMP:
Damian Titus
NYC Buildings
APPROVED
Under Directive 2 of 1975
AMENDED APPLICATION
Date: 10/08/2015
NYC Development Hub

DOB B-SCAN:

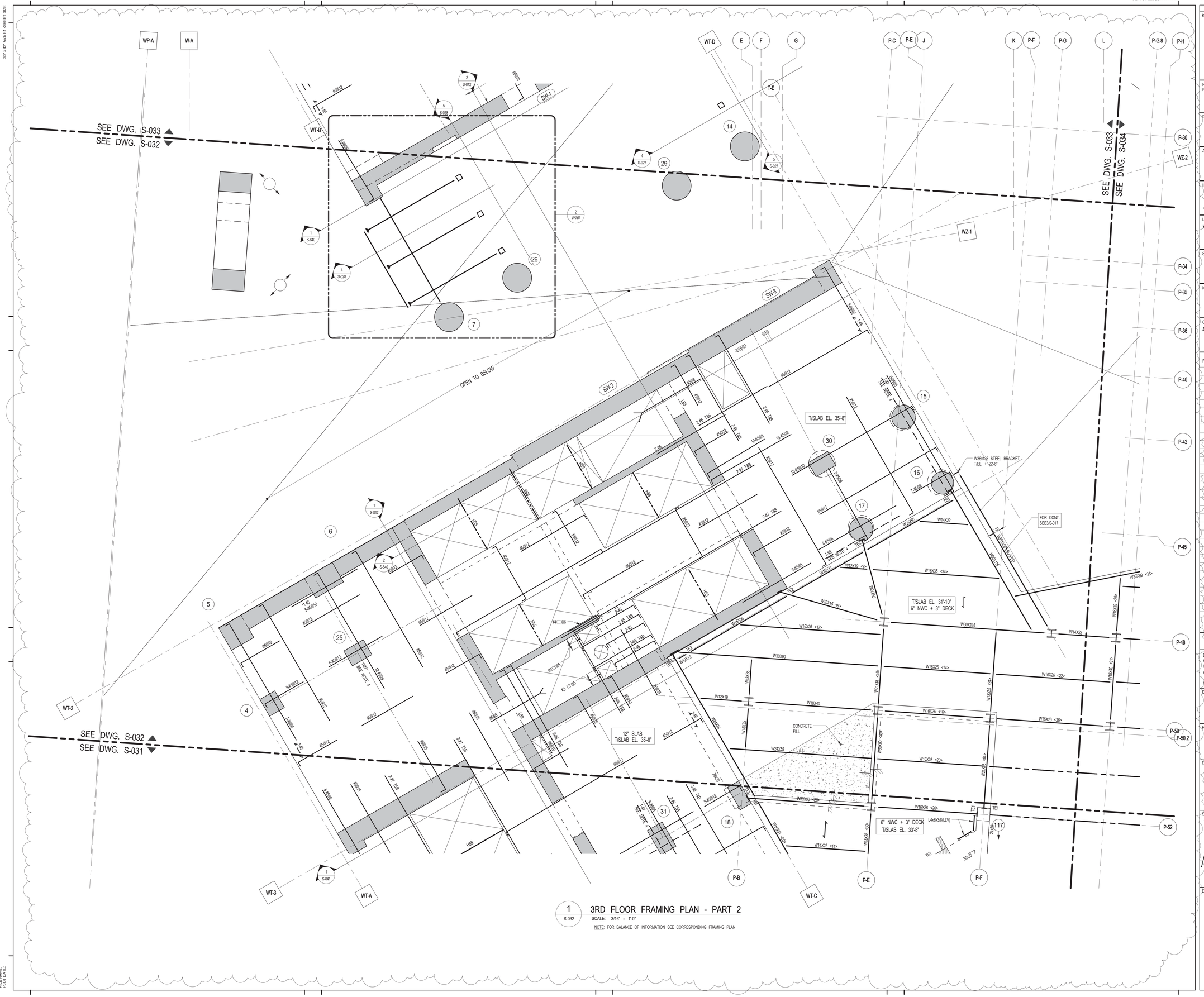

1 S-032 3RD FLOOR FRAMING PLAN - PART 2

SCALE: 3/16" = 1'-0"

NOTE: FOR BALANCE OF INFORMATION SEE CORRESPONDING FRAMING PLAN

KEY PLAN:

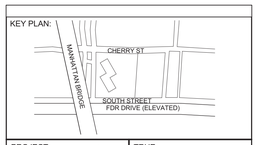

PROJECT NORTH

TRUE NORTH

DEVELOPER:
EXTELL DEVELOPMENT COMPANY
805 Third Ave, 7th Floor
New York, NY 10022
TEL: 212-712-6000 FAX: 212-712-6100

ARCHITECT OF RECORD:
AAI ARCHITECTS, P.C.
14 Wall Street, 2nd Floor
New York, NY 10005
TEL: 212-964-4040 FAX: 212-964-4090

INTERIOR DESIGNER:
MEYER DAVIS
180 Varick St, suite 404
New York, NY 10014
TEL: 212-627-5574

LANDSCAPE DESIGNER:
WEST 8 URBAN DESIGN & LANDSCAPE ARCHITECTURE P.C.
333 Hudson Street, Suite 905
New York, NY 10013
TEL: 212-285-0088 FAX: 212-285-0228

STRUCTURAL ENGINEERS:
WSP
228 East 45th Street
New York, NY 10017
TEL: 212-687-9888 FAX: 646-487-5501

MEP ENGINEERS:
ICOR ASSOCIATES, LLC
485 C Route 1 South, Suite 200
Iseline, NJ 08830
TEL: 908-272-3300 FAX: 908-272-4440

GEOTECHNICAL ENGINEERS:
LANGAN ENGINEERING & ENVIRONMENTAL SERVICES
21 Penn Plaza - 360 West 31st Street, 8th Floor
New York, NY 10001
TEL: 212.479.5400 FAX: 212.479.5444

No.	DESCRIPTION:	DATE:
1	DESIGN DEVELOPMENT	10-07-14
2	STEEL BID PACKAGE	02-24-15
3	CONCRETE BID PACKAGE	03-06-15
4	ADDENDUM #3	03-27-15
5	50% CONSTRUCTION DOCUMENTS	04-08-15
6	ADDENDUM #4	04-24-15
7	ADDENDUM #9	07-10-15
8	ISSUED FOR FILING	07-28-15

Discrepancies must be reported immediately to the Architect before proceeding. Only figured dimensions are to be used. Contractors must check all dimensions on site. This drawing is protected by copyright.

ALL DIMENSIONS ARE SHOWN IN IMPERIAL.

CONSULTANT:
WSP

PROJECT:
250 SOUTH STREET
NEW YORK, NY

DRAWING TITLE:
3RD FLOOR FRAMING PLAN - PART 2

SEAL & SIGNATURE:
STATE OF NEW YORK · AMMAD RAHMAN · No. 065537 · LICENSED PROFESSIONAL ENGINEER

DATE:	09/24/14
PROJECT No:	1302510
DRAWN: CAD	REV:
CHK: CL	
SCALE:	
DWG No:	S-032.01
DOB PAGE No:	of

DOB EMPLOYEE STAMP:
Damian Titus
Buildings
APPROVED
Under Directive 2 of 1975
AMENDED APPLICATION
Date: 10/08/2015
NYC Development Hub

DOB B-SCAN:

DEPT OF BLDGS 121185038 Job Number
E-S6249859311 Scan Code
30" x 42" Arch E1 - SHEET SIZE

6" NWC + 3" DECK
REINF. W//#5@12 O/C
TOP & BOTT. E.W.

6" NWC + 3" DECK
T/SLAB EL. 35'-8"
REINF. W//#5@12 O/C
TOP & BOTT. E.W.

T/SLAB EL. 35'-8"
6" NWC + 3" DECK

12" SLAB
T/SLAB EL. 35'-8"

8" KNEE WALL
TO UNDERSIDE OF
STAIR LANDING

W24X68 BRACKET

OPEN TO BELOW

SLOPE UP

W40X167 <50>
SLOPED

SEE DWG. S-033
SEE DWG. S-034

SEE DWG. S-033
SEE DWG. S-032

1 S-033 — 3RD FLOOR FRAMING PLAN - PART 3
SCALE: 3/16" = 1'-0"
NOTE: FOR BALANCE OF INFORMATION SEE CORRESPONDING FRAMING PLAN

FILE NAME:
PLOT DATE:

KEY PLAN:
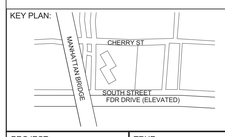

PROJECT NORTH
TRUE NORTH

DEVELOPER:
EXTELL DEVELOPMENT COMPANY
805 Third Ave, 7th Floor
New York, NY 10022
TEL: 212-712-6000 FAX: 212-712-6100

ARCHITECT OF RECORD:
AAI ARCHITECTS, P.C.
14 Wall Street, 2nd Floor
New York, NY 10005
TEL: 212-964-4040 FAX: 212-964-4090

INTERIOR DESIGNER:
MEYER DAVIS
180 Varick St, suite 404
New York, NY 10014
TEL: 212-627-5574

LANDSCAPE DESIGNER:
WEST 8 URBAN DESIGN & LANDSCAPE ARCHITECTURE P.C.
333 Hudson Street, Suite 905
New York, NY 10013
TEL: 212-285-0088 FAX: 212-285-0228

STRUCTURAL ENGINEERS:
WSP
228 East 45th Street
New York, NY 10017
TEL: 212-687-9888 FAX: 646-487-5501

MEP ENGINEERS:
ICOR ASSOCIATES, LLC
485 C Route 1 South, Suite 200
Iseline, NJ 08830
TEL: 908-272-3300 FAX: 908-272-4440

GEOTECHNICAL ENGINEERS:
LANGAN ENGINEERING & ENVIRONMENTAL SERVICES
21 Penn Plaza - 360 West 31st Street, 8th Floor
New York, NY 10001
TEL: 212.479.5400 FAX: 212.479.5444

No.	DESCRIPTION:	DATE:
1	DESIGN DEVELOPMENT	10-07-14
2	STEEL BID PACKAGE	02-24-15
3	CONCRETE BID PACKAGE	03-06-15
4	RFI 190 UPDATE	03-17-15
5	ADDENDUM #3	03-27-15
6	50% CONSTRUCTION DOCUMENTS	04-08-15
7	ADDENDUM #4	04-24-15
8	ADDENDUM #5	05-01-15
9	ADDENDUM #9	07-10-15
10	ADDENDUM #10	07-20-15
11	ISSUED FOR FILING	07-28-15

Discrepancies must be reported immediately to the Architect before proceeding. Only figured dimensions are to be used. Contractors must check all dimensions on site. This drawing is protected by copyright.

ALL DIMENSIONS ARE SHOWN IN IMPERIAL.

CONSULTANT:
WSP

PROJECT:
250 SOUTH STREET
NEW YORK, NY

DRAWING TITLE:
3RD FLOOR FRAMING PLAN - PART 3

SEAL & SIGNATURE:
STATE OF NEW YORK · AHMAD RAHIMIAN · No. 065527 · LICENSED PROFESSIONAL ENGINEER

DATE: 09/24/14
PROJECT No: 1302510
DRAWN: CAD REV:
CHK: CL
SCALE:
DWG No: **S-033.01**
DOB PAGE No: of

DOB EMPLOYEE STAMP:
Damian Titus
Buildings
APPROVED
Under Directive 2 of 1975
AMENDED APPLICATION
Date: 10/08/2015
NYC Development Hub

DOB B-SCAN:

DEPT OF BLDGS 121305539 Job Number

E-589642/86/99 Scan Code

30" x 42" Arch E1 - SHEET SIZE

1 S-034 — 3RD FLOOR FRAMING PLAN - PART 4

SCALE: 3/16" = 1'-0"

NOTE: FOR BALANCE OF INFORMATION SEE CORRESPONDING FRAMING PLAN

FILE NAME:
PLOT DATE:

KEY PLAN:

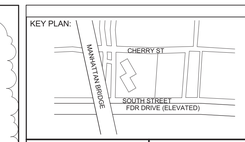

PROJECT NORTH

TRUE NORTH

DEVELOPER:
EXTELL DEVELOPMENT COMPANY
805 Third Ave, 7th Floor
New York, NY 10022
TEL: 212-712-6000 FAX: 212-712-6100

ARCHITECT OF RECORD:
AAI ARCHITECTS, P.C.
14 Wall Street, 2nd Floor
New York, NY 10005
TEL: 212-964-4040 FAX: 212-964-4090

INTERIOR DESIGNER:
MEYER DAVIS
180 Varick St, suite 404
New York, NY 10014
TEL: 212-627-5574

LANDSCAPE DESIGNER:
WEST 8 URBAN DESIGN & LANDSCAPE ARCHITECTURE P.C.
333 Hudson Street, Suite 905
New York, NY 10013
TEL: 212-285-0088 FAX: 212-285-0228

STRUCTURAL ENGINEERS:
WSP
228 East 45th Street
New York, NY 10017
TEL: 212-687-9888 FAX: 646-487-5501

MEP ENGINEERS:
ICOR ASSOCIATES, LLC
485 C Route 1 South, Suite 200
Iseline, NJ 08830
TEL: 908-272-3300 FAX: 908-272-4440

GEOTECHNICAL ENGINEERS:
LANGAN ENGINEERING & ENVIRONMENTAL SERVICES
21 Penn Plaza - 360 West 31st Street, 8th Floor
New York, NY 10001
TEL: 212.479.5400 FAX: 212.479.5444

No.	DESCRIPTION:	DATE:
1	DESIGN DEVELOPMENT	10-07-14
2	STEEL BID PACKAGE	02-24-15
3	ADDENDUM #3	03-27-15
4	50% CONSTRUCTION DOCUMENTS	04-08-15
5	ADDENDUM #4	04-24-15
6	ADDENDUM #5	05-01-15
7	ADDENDUM #10	07-20-15
8	ISSUED FOR FILING	07-28-15

Discrepancies must be reported immediately to the Architect before proceeding. Only figured dimensions are to be used. Contractors must check all dimensions on site. This drawing is protected by copyright.

ALL DIMENSIONS ARE SHOWN IN IMPERIAL.

CONSULTANT:
WSP

PROJECT:
250 SOUTH STREET
NEW YORK, NY

DRAWING TITLE:
3RD FLOOR FRAMING PLAN - PART 4

SEAL & SIGNATURE:

DATE:	09/24/14
PROJECT No:	1302510
DRAWN: CAD	REV:
CHK: CL	
SCALE:	
DWG No:	**S-034.01**
DOB PAGE No:	of

DOB EMPLOYEE STAMP:

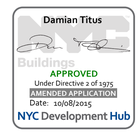

DOB B-SCAN:

DEPT OF BLDGS 121185039 Job Number
E 5999522792 Scan Code
30" x 42" Arch E1 - SHEET SIZE

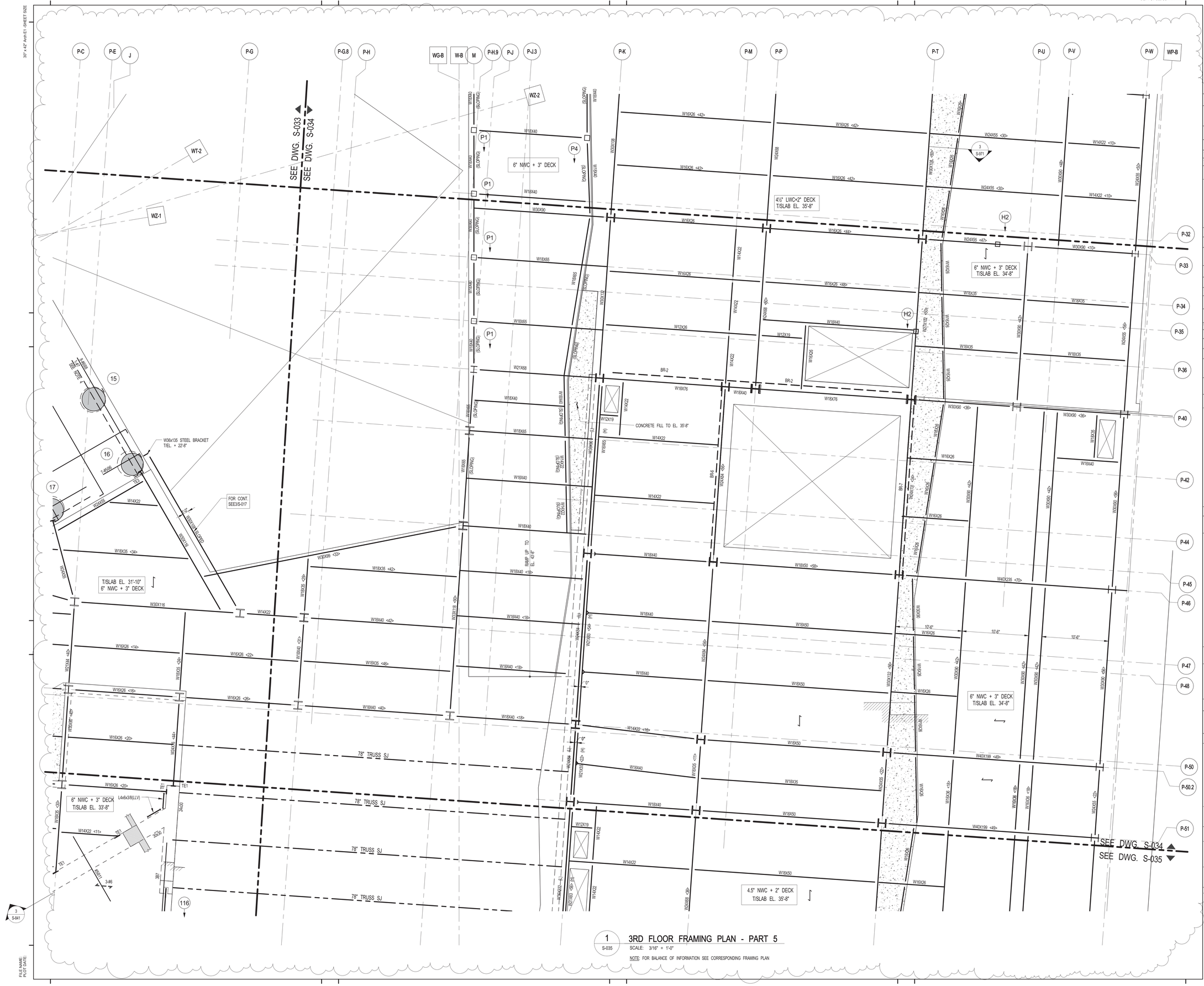

3RD FLOOR FRAMING PLAN - PART 5

SCALE: 3/16" = 1'-0"

NOTE: FOR BALANCE OF INFORMATION SEE CORRESPONDING FRAMING PLAN

KEY PLAN:

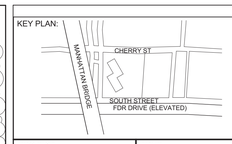

PROJECT NORTH

TRUE NORTH

DEVELOPER:
EXTELL DEVELOPMENT COMPANY
805 Third Ave, 7th Floor
New York, NY 10022
TEL: 212-712-6000 FAX: 212-712-6100

ARCHITECT OF RECORD:
AAI ARCHITECTS, P.C.
14 Wall Street, 2nd Floor
New York, NY 10005
TEL: 212-964-4040 FAX: 212-964-4090

INTERIOR DESIGNER:
MEYER DAVIS
180 Varick St, suite 404
New York, NY 10014
TEL: 212-627-5574

LANDSCAPE DESIGNER:
WEST 8 URBAN DESIGN & LANDSCAPE ARCHITECTURE P.C.
333 Hudson Street, Suite 905
New York, NY 10013
TEL: 212-285-0088 FAX: 212-285-0228

STRUCTURAL ENGINEERS:
WSP
228 East 45th Street
New York, NY 10017
TEL: 212-687-9888 FAX: 646-487-5501

MEP ENGINEERS:
ICOR ASSOCIATES, LLC
485 C Route 1 South, Suite 200
Iseline, NJ 08830
TEL: 908-272-3300 FAX: 908-272-4440

GEOTECHNICAL ENGINEERS:
LANGAN ENGINEERING & ENVIRONMENTAL SERVICES
21 Penn Plaza - 360 West 31st Street, 8th Floor
New York, NY 10001
TEL: 212.479.5400 FAX: 212.479.5444

No.	DESCRIPTION:	DATE:
1	DESIGN DEVELOPMENT	10-07-14
2	STEEL BID PACKAGE	02-24-15
3	ADDENDUM #3	03-27-15
4	50% CONSTRUCTION DOCUMENTS	04-08-15
5	ADDENDUM #4	04-24-15
6	ADDENDUM #5	05-01-15
7	ISSUED FOR FILING	07-28-15

Discrepancies must be reported immediately to the Architect before proceeding. Only figured dimensions are to be used. Contractors must check all dimensions on site. This drawing is protected by copyright.

ALL DIMENSIONS ARE SHOWN IN IMPERIAL.

CONSULTANT:
WSP

PROJECT:
250 SOUTH STREET
NEW YORK, NY

DRAWING TITLE:
3RD FLOOR FRAMING PLAN - PART 5

SEAL & SIGNATURE:
STATE OF NEW YORK · AHMAD RAHIMIAN · No. 065527 · LICENSED PROFESSIONAL ENGINEER

DATE:	09/24/14
PROJECT No:	1302510
DRAWN: CAD	REV:
CHK: CL	
SCALE:	
DWG No:	**S-035.01**
DOB PAGE No:	of

DOB EMPLOYEE STAMP:
Damian Titus
Building Inspector
APPROVED
Under Directive 2 of 1975
AMENDED APPLICATION
Date: 10/08/2015
NYC Development Hub

DOB B-SCAN:

FILE NAME:
PLOT DATE:

DEPT OF BLDGS 121185528 Job Number
ES112466993 Scan Code

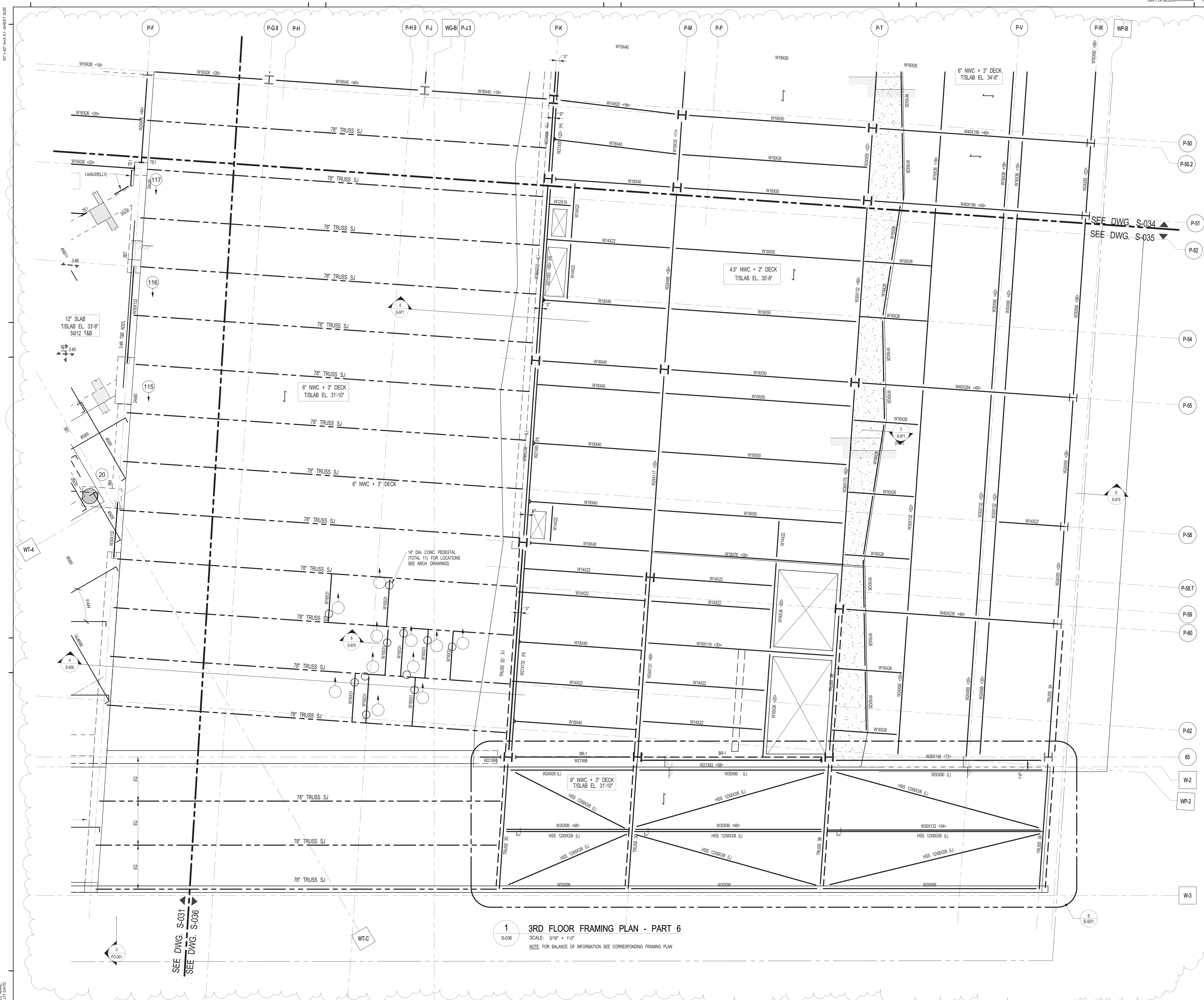

3RD FLOOR FRAMING PLAN - PART 6

1 / S-036

SCALE: 3/16" = 1'-0"

NOTE: FOR BALANCE OF INFORMATION SEE CORRESPONDING FRAMING PLAN

KEY PLAN:

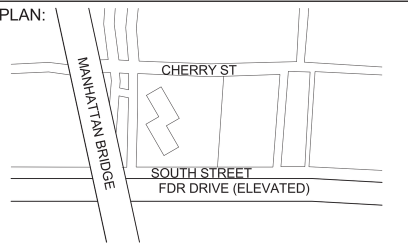

PROJECT NORTH

TRUE NORTH

DEVELOPER:
EXTELL DEVELOPMENT COMPANY
805 Third Ave, 7th Floor
New York, NY 10022
TEL: 212-712-6000 FAX: 212-712-6100

ARCHITECT OF RECORD:
AAI ARCHITECTS, P.C.
14 Wall Street, 2nd Floor
New York, NY 10005
TEL: 212-964-4040 FAX: 212-964-4090

INTERIOR DESIGNER:
MEYER DAVIS
180 Varick St, suite 404
New York, NY 10014
TEL: 212-627-5574

LANDSCAPE DESIGNER:
WEST 8 URBAN DESIGN & LANDSCAPE ARCHITECTURE P.C.
333 Hudson Street, Suite 905
New York, NY 10013
TEL: 212-285-0088 FAX: 212-285-0228

STRUCTURAL ENGINEERS:
WSP
228 East 45th Street
New York, NY 10017
TEL: 212-687-9888 FAX: 646-487-5501

MEP ENGINEERS:
ICOR ASSOCIATES, LLC
485 C Route 1 South, Suite 200
Iseline, NJ 08830
TEL: 908-272-3300 FAX: 908-272-4440

GEOTECHNICAL ENGINEERS:
LANGAN ENGINEERING & ENVIRONMENTAL SERVICES
21 Penn Plaza - 360 West 31st Street, 8th Floor
New York, NY 10001
TEL: 212.479.5400 FAX: 212.479.5444

No.	DESCRIPTION:	DATE:
1	DESIGN DEVELOPMENT	10-07-14
2	STEEL BID PACKAGE	02-24-15
3	ADDENDUM #3	03-27-15
4	50% CONSTRUCTION DOCUMENTS	04-08-15
5	ADDENDUM #4	04-24-15
6	ADDENDUM #5	05-01-15
7	ISSUED FOR FILING	07-28-15

Discrepancies must be reported immediately to the Architect before proceeding. Only figured dimensions are to be used. Contractors must check all dimensions on site. This drawing is protected by copyright.

ALL DIMENSIONS ARE SHOWN IN IMPERIAL.

CONSULTANT: WSP

PROJECT:
250 SOUTH STREET
NEW YORK, NY

DRAWING TITLE:
3RD FLOOR FRAMING PLAN - PART 6

SEAL & SIGNATURE: STATE OF NEW YORK · AHMAD RAHIMIAN · No. 065537 · LICENSED PROFESSIONAL ENGINEER

DATE:	09/24/14
PROJECT No:	1302510
DRAWN:	CAD
CHK:	CL
REV:	
SCALE:	
DWG No:	**S-036.01**
DOB PAGE No:	of

DOB EMPLOYEE STAMP:
Damian Titus
Buildings
APPROVED
Under Directive 2 of 1975
AMENDED APPLICATION
Date: 10/08/2015
NYC Development Hub

DOB B-SCAN:

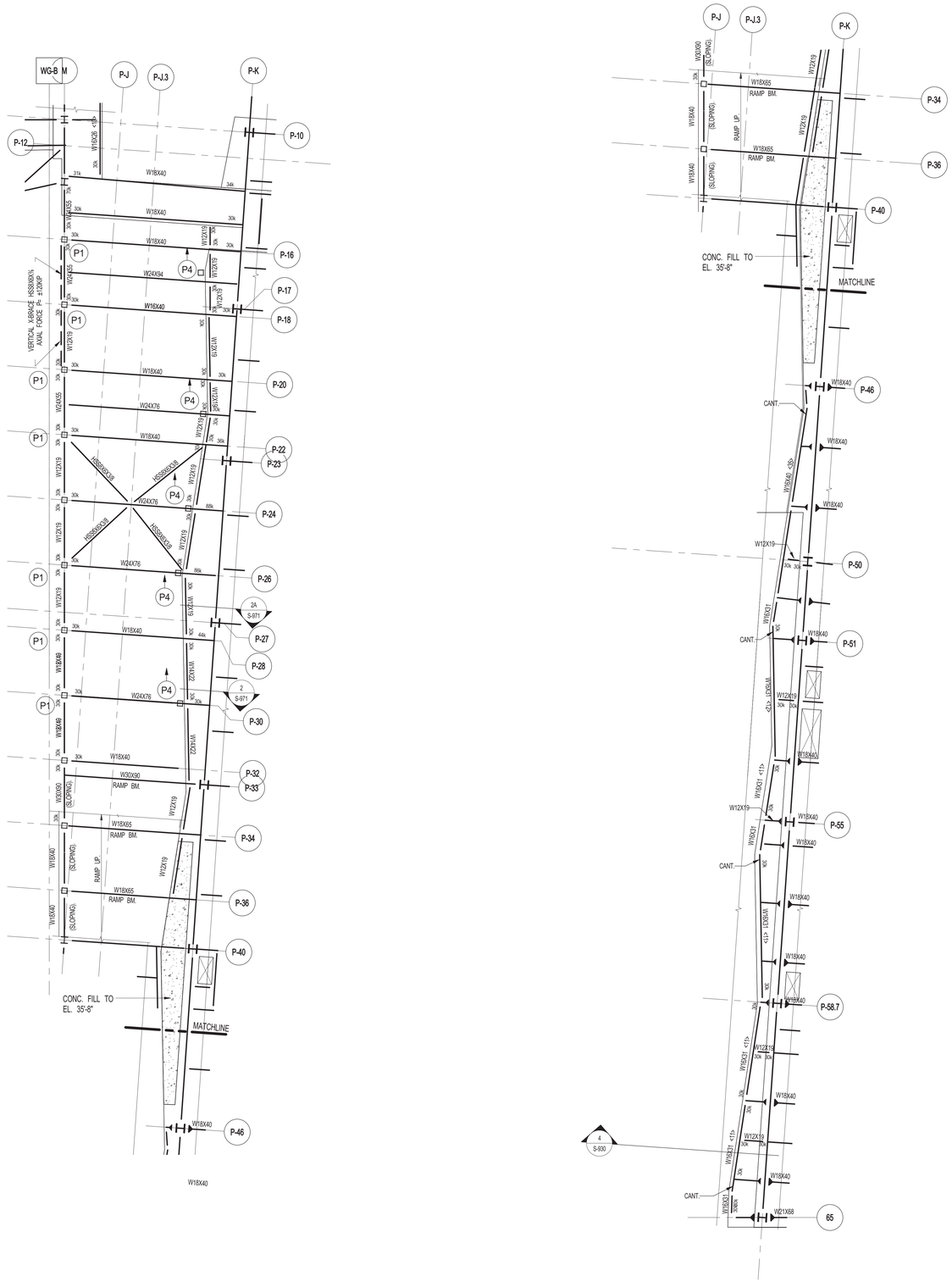

1 S-037 PART FRAMING PLAN AT ELEVATION 35'-8"

SCALE: 1/8" = 1'-0"

NOTE: FOR BALANCE OF INFORMATION SEE CORRESPONDING FRAMING PLAN

KEY PLAN:

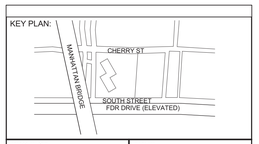

PROJECT NORTH

TRUE NORTH

DEVELOPER:
EXTELL DEVELOPMENT COMPANY
805 Third Ave, 7th Floor
New York, NY 10022
TEL: 212-712-6000 FAX: 212-712-6100

ARCHITECT OF RECORD:
AAI ARCHITECTS, P.C.
14 Wall Street, 2nd Floor
New York, NY 10005
TEL: 212-964-4040 FAX: 212-964-4090

INTERIOR DESIGNER:
MEYER DAVIS
180 Varick St, suite 404
New York, NY 10014
TEL: 212-627-5574

LANDSCAPE DESIGNER:
WEST 8 URBAN DESIGN & LANDSCAPE ARCHITECTURE P.C.
333 Hudson Street, Suite 905
New York, NY 10013
TEL: 212-285-0088 FAX: 212-285-0228

STRUCTURAL ENGINEERS:
WSP
228 East 45th Street
New York, NY 10017
TEL: 212-687-9888 FAX: 646-487-5501

MEP ENGINEERS:
ICOR ASSOCIATES, LLC
485 C Route 1 South, Suite 200
Iseline, NJ 08830
TEL: 908-272-3300 FAX: 908-272-4440

GEOTECHNICAL ENGINEERS:
LANGAN ENGINEERING & ENVIRONMENTAL SERVICES
21 Penn Plaza - 360 West 31st Street, 8th Floor
New York, NY 10001
TEL: 212.479.5400 FAX: 212.479.5444

No.	DESCRIPTION:	DATE:
1	STEEL BID PACKAGE	02-24-15
2	ADDENDUM #3	03-27-15
3	50% CONSTRUCTION DOCUMENTS	04-08-15
4	ADDENDUM #4	04-24-15
5	ISSUED FOR FILING	07-28-15

Discrepancies must be reported immediately to the Architect before proceeding. Only figured dimensions are to be used. Contractors must check all dimensions on site. This drawing is protected by copyright.

ALL DIMENSIONS ARE SHOWN IN IMPERIAL.

CONSULTANT:
WSP

PROJECT:
250 SOUTH STREET
NEW YORK, NY

DRAWING TITLE:
3RD FLOOR RAMP PART FRAMING PLAN

SEAL & SIGNATURE:
STATE OF NEW YORK · AMMAD RAHIMIAN · No. 065537 · LICENSED PROFESSIONAL ENGINEER

DATE:	02/24/15
PROJECT No:	1302510
DRAWN: CAD	REV:
CHK: CL	
SCALE: As indicated	
DWG No:	S-037.01
DOB PAGE No:	of

DOB EMPLOYEE STAMP:
Damian Titus
Buildings
APPROVED
Under Directive 2 of 1975
AMENDED APPLICATION
Date: 10/08/2015
NYC Development Hub

DOB B-SCAN:

30" x 42" Arch E1 - SHEET SIZE

FILE NAME:
PLOT DATE:

DEPT OF BLDGS121185539 Job Number
E360953475 43 Scan Code

30" x 42" Arch E1 - SHEET SIZE

1 S-040 4TH FLOOR OVERALL FRAMING PLAN
SCALE: 1/16" = 1'-0"

STEEL NOTES

1. TOP OF SLAB AT STEEL CONSTRUCTION SHALL BE 57'-10" U.O.N. ON PLAN.
2. SLAB CONSTRUCTION SHALL BE 15" NORMAL WEIGHT CONCRETE ON TOP OF 3" COMPOSITE METAL DECK (TOTAL SLAB DEPTH - 18") U.O.N. ON PLAN.
3. STUDS SHALL BE: 3/4" Ø x 8" LONG. FOR 15" COMPOSITE SLAB.
   3/4" Ø x 5" LONG. FOR 9" COMPOSITE SLAB.
   REINF TO BE: #6@12 O.C. T&B E.W. FOR 18" COMPOSITE SLAB
   #5@12 TOP E.W. + #4@12 BOTTOM (FLUTE) FOR 9" COMPOSITE SLAB.
4. ALL BEAMS DIRECTLY CONNECTING TO COLUMNS SHALL BE DESIGNED TO TRANSFER AN AXIAL 'FORCE' (TENSION OR COMPRESSION) OF P = 150kips. BEAMS AT GRID LINE P-K & P-T P = 300kips AT EACH END U.O.N. ON PLAN IN ADDITION TO ALL OTHER LOADS.
5. FOR BALANCE OF NOTES SEE DRAWING S-010.

CONCRETE NOTES:

1. TOP OF SLAB ELEVATION SEE PLAN
2. SLAB TO BE 12" THICK U.O.N. THUS [ ] ON PLAN.
3. BOTTOM REINFORCEMENT TO BE #5@12 CONT. E.W. FOR 12" SLAB, FOR ADDITIONAL REINFORCEMENT SEE PLAN
4. FOR DETAILS OF THE INTEGRITY REINFORCEMENT SEE DRAWING S-965.
5. FOR BALANCE OF NOTES SEE DRAWING S-010.

4TH FLOOR BEAM SCHEDULE

BEAM MARK	SIZE WIDTH	SIZE DEPTH	REINFORCEMENT BOTTOM CONTINUOUS	REINFORCEMENT TOP CONTINUOUS	STIRRUPS TYPE	STIRRUPS SIZE	STIRRUPS SPACING	REMARKS
4B4	32	12	8-#7	8-#7	2	#4	@5	EXTEND TOP BARS INTO SLAB
4BM1	12	24	2-#11	2-#11	1	#4	@6	
4BM2	12	24	3-#11	2-#11	1	#4	@10	
4BM3	12	24	2-#9	2-#9	1	#4	@10	
4BM4	8	12	2-#6	2-#6	1	#3	@5	

TYPE 1 TYPE 2

STIRRUP TYPES

KEY PLAN:

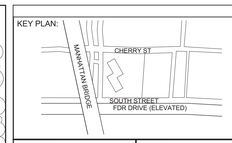

PROJECT NORTH TRUE NORTH

DEVELOPER:
EXTELL DEVELOPMENT COMPANY
805 Third Ave, 7th Floor
New York, NY 10022
TEL: 212-712-6000 FAX: 212-712-6100

ARCHITECT OF RECORD:
AAI ARCHITECTS, P.C.
14 Wall Street, 2nd Floor
New York, NY 10005
TEL: 212-964-4040 FAX: 212-964-4090

INTERIOR DESIGNER:
MEYER DAVIS
180 Varick St, suite 404
New York, NY 10014
TEL: 212-627-5574

LANDSCAPE DESIGNER:
WEST 8 URBAN DESIGN & LANDSCAPE ARCHITECTURE P.C.
333 Hudson Street, Suite 905
New York, NY 10013
TEL: 212-285-0088 FAX: 212-285-0228

STRUCTURAL ENGINEERS:
WSP
228 East 45th Street
New York, NY 10017
TEL: 212-687-9888 FAX: 646-487-5501

MEP ENGINEERS:
ICOR ASSOCIATES, LLC
485 C Route 1 South, Suite 200
Iseline, NJ 08830
TEL: 908-272-3300 FAX: 908-272-4440

GEOTECHNICAL ENGINEERS:
LANGAN ENGINEERING & ENVIRONMENTAL SERVICES
21 Penn Plaza - 360 West 31st Street, 8th Floor
New York, NY 10001
TEL: 212.479.5400 FAX: 212.479.5444

No.	DESCRIPTION:	DATE:
1	50% SD	02-28-14
2	100%SD	04-25-14
3	50% DD	08-01-14
4	DESIGN DEVELOPMENT	10-07-14
5	STEEL BID PACKAGE	02-24-15
6	CONCRETE BID PACKAGE	03-06-15
7	ADDENDUM #3	03-27-15
8	50% CONSTRUCTION DOCUMENTS	04-08-15
9	ADDENDUM #4	04-24-15
10	ADDENDUM #5	05-01-15
11	ADDENDUM #10	07-20-15
12	ISSUED FOR FILING	07-28-15

Discrepancies must be reported immediately to the Architect before proceeding. Only figured dimensions are to be used. Contractors must check all dimensions on site. This drawing is protected by copyright.

ALL DIMENSIONS ARE SHOWN IN IMPERIAL.

CONSULTANT: WSP

PROJECT:
250 SOUTH STREET
NEW YORK, NY

DRAWING TITLE:
4TH FLOOR OVERALL FRAMING PLAN

SEAL & SIGNATURE:

DATE:	02/24/14
PROJECT No:	1302510
DRAWN: CAD	REV:
CHK: CL	
SCALE:	
DWG No:	**S-040.01**
DOB PAGE No:	of

DOB EMPLOYEE STAMP:

DOB B-SCAN:

FILE NAME:
PLOT DATE:

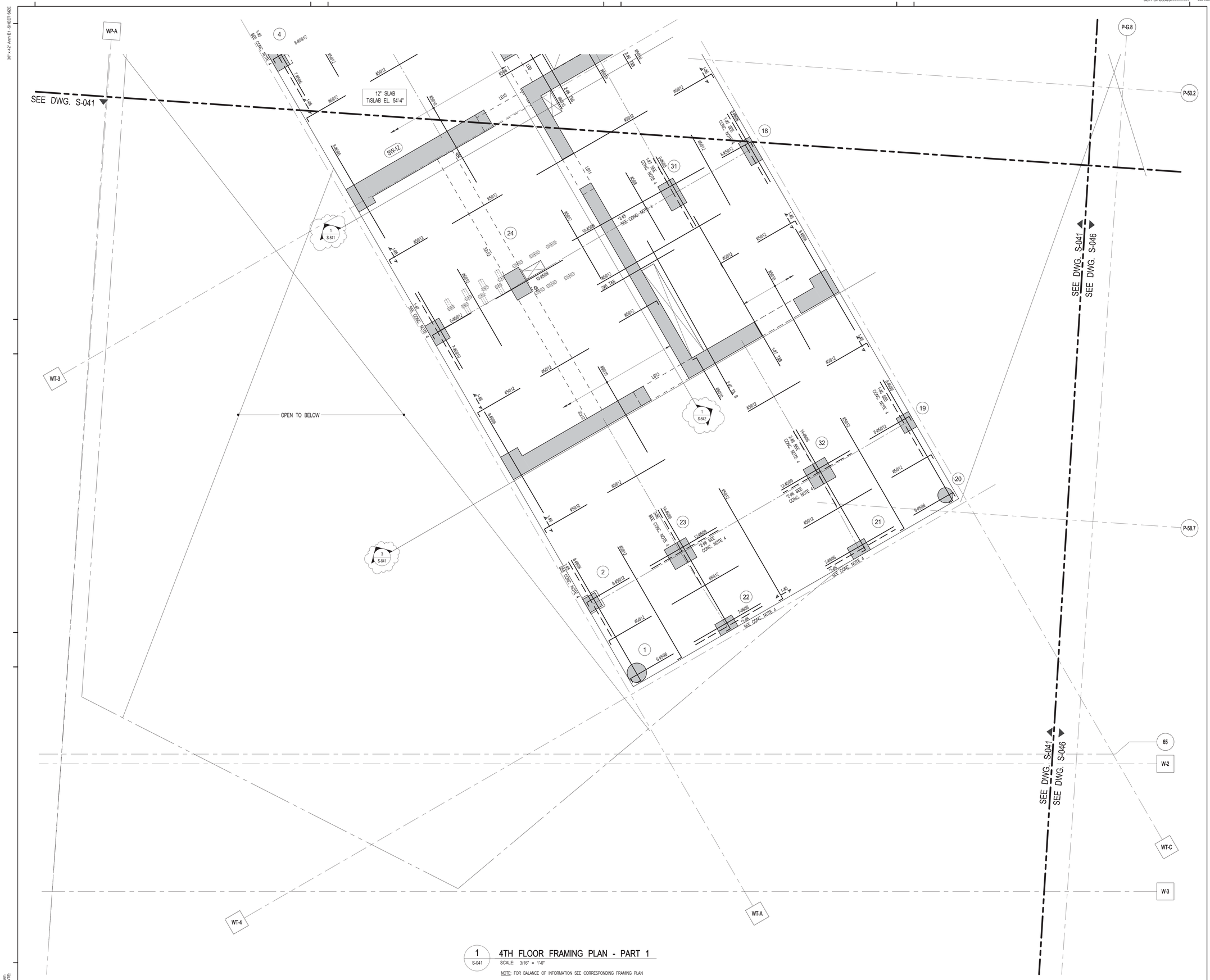

1 S-041 4TH FLOOR FRAMING PLAN - PART 1

SCALE: 3/16" = 1'-0"

NOTE: FOR BALANCE OF INFORMATION SEE CORRESPONDING FRAMING PLAN

KEY PLAN:

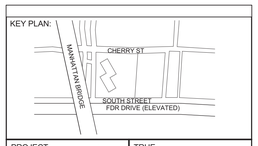

PROJECT NORTH

TRUE NORTH

DEVELOPER:
EXTELL DEVELOPMENT COMPANY
805 Third Ave, 7th Floor
New York, NY 10022
TEL: 212-712-6000 FAX: 212-712-6100

ARCHITECT OF RECORD:
AAI ARCHITECTS, P.C.
14 Wall Street, 2nd Floor
New York, NY 10005
TEL: 212-964-4040 FAX: 212-964-4090

INTERIOR DESIGNER:
MEYER DAVIS
180 Varick St, suite 404
New York, NY 10014
TEL: 212-627-5574

LANDSCAPE DESIGNER:
WEST 8 URBAN DESIGN & LANDSCAPE ARCHITECTURE P.C.
333 Hudson Street, Suite 905
New York, NY 10013
TEL: 212-285-0088 FAX: 212-285-0228

STRUCTURAL ENGINEERS:
WSP
228 East 45th Street
New York, NY 10017
TEL: 212-687-9888 FAX: 646-487-5501

MEP ENGINEERS:
ICOR ASSOCIATES, LLC
485 C Route 1 South, Suite 200
Iseline, NJ 08830
TEL: 908-272-3300 FAX: 908-272-4440

GEOTECHNICAL ENGINEERS:
LANGAN ENGINEERING & ENVIRONMENTAL SERVICES
21 Penn Plaza - 360 West 31st Street, 8th Floor
New York, NY 10001
TEL: 212.479.5400 FAX: 212.479.5444

No.	DESCRIPTION:	DATE:
1	DESIGN DEVELOPMENT	10-07-14
2	STEEL BID PACKAGE	02-24-15
3	CONCRETE BID PACKAGE	03-06-15
4	50% CONSTRUCTION DOCUMENTS	04-08-15
5	ISSUED FOR FILING	07-28-15

Discrepancies must be reported immediately to the Architect before proceeding. Only figured dimensions are to be used. Contractors must check all dimensions on site. This drawing is protected by copyright.

ALL DIMENSIONS ARE SHOWN IN IMPERIAL.

CONSULTANT:
WSP

PROJECT:
250 SOUTH STREET
NEW YORK, NY

DRAWING TITLE:
4TH FLOOR FRAMING PLAN - PART 1

SEAL & SIGNATURE:
STATE OF NEW YORK · AHMAD RAHIMIAN · No. 085537 · LICENSED PROFESSIONAL ENGINEER

DATE:	09/24/14
PROJECT No:	1302510
DRAWN: CAD	REV:
CHK: CL	
SCALE:	
DWG No:	**S-041.01**
DOB PAGE No:	of

DOB EMPLOYEE STAMP:
Damian Titus
Buildings
APPROVED
Under Directive 2 of 1975
AMENDED APPLICATION
Date: 10/08/2015
NYC Development Hub

DOB B-SCAN:

30" x 42" Arch E1 - SHEET SIZE

FILE NAME:
PLOT DATE:

DEPT OF BLDGS121105539 Job Number
E52625758533 Scan Code

30" x 42" Arch E1 - SHEET SIZE

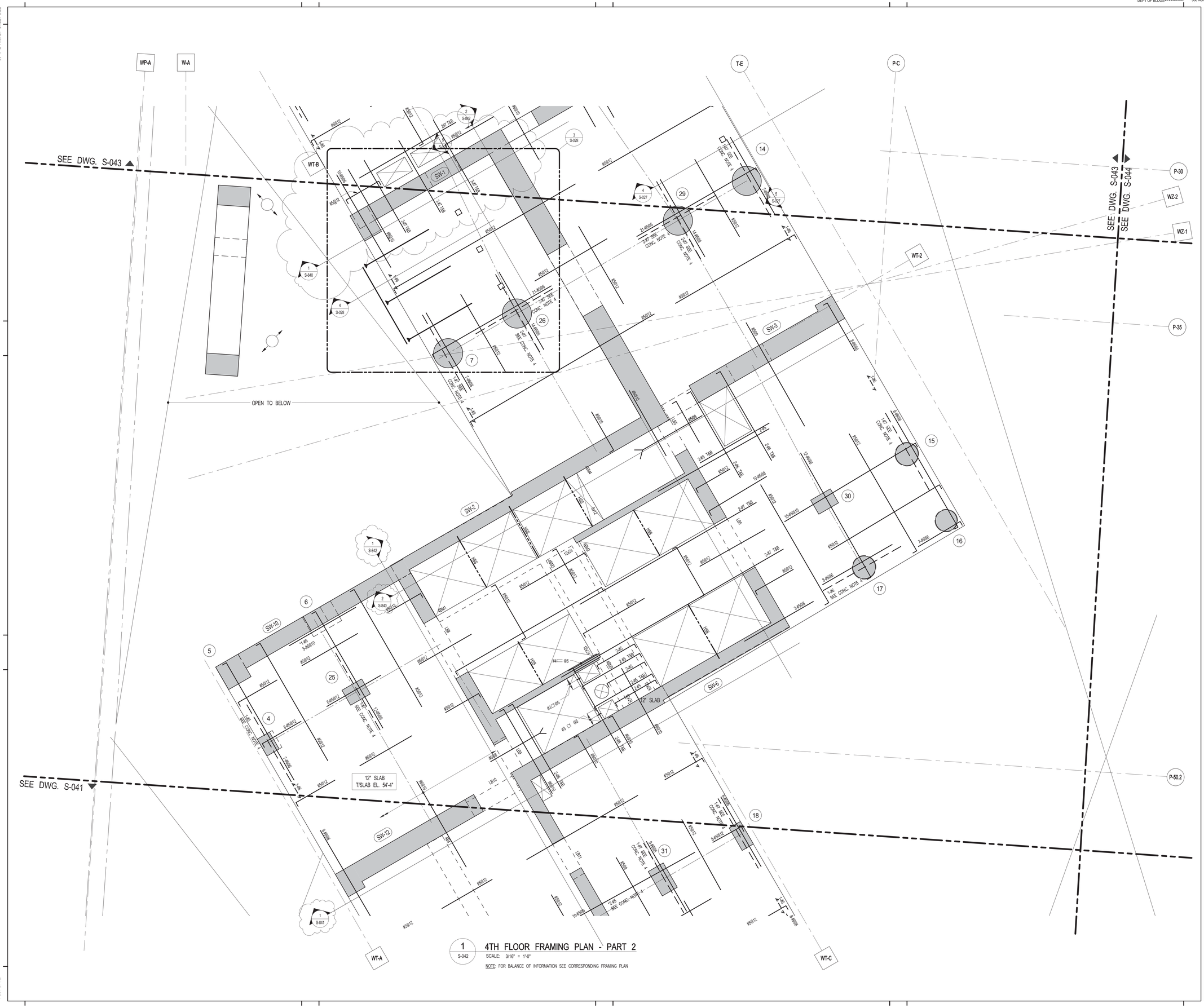

1 S-042 **4TH FLOOR FRAMING PLAN - PART 2**

SCALE: 3/16" = 1'-0"

NOTE: FOR BALANCE OF INFORMATION SEE CORRESPONDING FRAMING PLAN

FILE NAME:
PLOT DATE:

KEY PLAN:

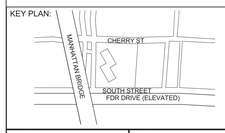

PROJECT NORTH

TRUE NORTH

DEVELOPER:
EXTELL DEVELOPMENT COMPANY
805 Third Ave, 7th Floor
New York, NY 10022
TEL: 212-712-6000 FAX: 212-712-6100

ARCHITECT OF RECORD:
AAI ARCHITECTS, P.C.
14 Wall Street, 2nd Floor
New York, NY 10005
TEL: 212-964-4040 FAX: 212-964-4090

INTERIOR DESIGNER:
MEYER DAVIS
180 Varick St, suite 404
New York, NY 10014
TEL: 212-627-5574

LANDSCAPE DESIGNER:
WEST 8 URBAN DESIGN & LANDSCAPE ARCHITECTURE P.C.
333 Hudson Street, Suite 905
New York, NY 10013
TEL: 212-285-0088 FAX: 212-285-0228

STRUCTURAL ENGINEERS:
WSP
228 East 45th Street
New York, NY 10017
TEL: 212-687-9888 FAX: 646-487-5501

MEP ENGINEERS:
ICOR ASSOCIATES, LLC
485 C Route 1 South, Suite 200
Iseline, NJ 08830
TEL: 908-272-3300 FAX: 908-272-4440

GEOTECHNICAL ENGINEERS:
LANGAN ENGINEERING & ENVIRONMENTAL SERVICES
21 Penn Plaza - 360 West 31st Street, 8th Floor
New York, NY 10001
TEL: 212.479.5400 FAX: 212.479.5444

No.	DESCRIPTION:	DATE:
1	DESIGN DEVELOPMENT	10-07-14
2	STEEL BID PACKAGE	02-24-15
3	CONCRETE BID PACKAGE	03-06-15
4	50% CONSTRUCTION DOCUMENTS	04-08-15
5	ADDENDUM #5	05-01-15
6	ISSUED FOR FILING	07-28-15

Discrepancies must be reported immediately to the Architect before proceeding. Only figured dimensions are to be used. Contractors must check all dimensions on site. This drawing is protected by copyright.

ALL DIMENSIONS ARE SHOWN IN IMPERIAL.

CONSULTANT:
WSP

PROJECT:
250 SOUTH STREET
NEW YORK, NY

DRAWING TITLE:
4TH FLOOR FRAMING PLAN - PART 2

SEAL & SIGNATURE:

STATE OF NEW YORK
RICHARD RAMBOSK
No. 065527
LICENSED PROFESSIONAL ENGINEER

DATE:	09/24/14
PROJECT No:	1302510
DRAWN: CAD	REV:
CHK: CL	
SCALE:	
DWG No:	**S-042.01**
DOB PAGE No:	of

DOB EMPLOYEE STAMP:

Damian Titus
Buildings
APPROVED
Under Directive 2 of 1975
AMENDED APPLICATION
Date: 10/08/2015
NYC Development Hub

DOB B-SCAN:

DEPT OF BLDGS121185038 Job Number
E:SE11.1R0052 Scan Code
30" x 42" Arch E1 - SHEET SIZE

1 S-043 **4TH FLOOR FRAMING PLAN - PART 3**

SCALE: 3/16" = 1'-0"

NOTE: FOR BALANCE OF INFORMATION SEE CORRESPONDING FRAMING PLAN

KEY PLAN:

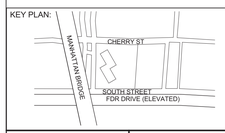

PROJECT NORTH | TRUE NORTH

DEVELOPER:
EXTELL DEVELOPMENT COMPANY
805 Third Ave, 7th Floor
New York, NY 10022
TEL: 212-712-6000 FAX: 212-712-6100

ARCHITECT OF RECORD:
AAI ARCHITECTS, P.C.
14 Wall Street, 2nd Floor
New York, NY 10005
TEL: 212-964-4040 FAX: 212-964-4090

INTERIOR DESIGNER:
MEYER DAVIS
180 Varick St, suite 404
New York, NY 10014
TEL: 212-627-5574

LANDSCAPE DESIGNER:
WEST 8 URBAN DESIGN & LANDSCAPE ARCHITECTURE P.C.
333 Hudson Street, Suite 905
New York, NY 10013
TEL: 212-285-0088 FAX: 212-285-0228

STRUCTURAL ENGINEERS:
WSP
228 East 45th Street
New York, NY 10017
TEL: 212-687-9888 FAX: 646-487-5501

MEP ENGINEERS:
ICOR ASSOCIATES, LLC
485 C Route 1 South, Suite 200
Iseline, NJ 08830
TEL: 908-272-3300 FAX: 908-272-4440

GEOTECHNICAL ENGINEERS:
LANGAN ENGINEERING & ENVIRONMENTAL SERVICES
21 Penn Plaza - 360 West 31st Street, 8th Floor
New York, NY 10001
TEL: 212.479.5400 FAX: 212.479.5444

No.	DESCRIPTION:	DATE:
1	DESIGN DEVELOPMENT	10-07-14
2	STEEL BID PACKAGE	02-24-15
3	CONCRETE BID PACKAGE	03-06-15
4	RFI 190 UPDATE	03-17-15
5	ADDENDUM #3	03-27-15
6	50% CONSTRUCTION DOCUMENTS	04-08-15
7	ADDENDUM #4	04-24-15
8	ADDENDUM #5	05-01-15
9	ADDENDUM #10	07-20-15
10	ISSUED FOR FILING	07-28-15

Discrepancies must be reported immediately to the Architect before proceeding. Only figured dimensions are to be used. Contractors must check all dimensions on site. This drawing is protected by copyright.

ALL DIMENSIONS ARE SHOWN IN IMPERIAL.

CONSULTANT: WSP

PROJECT:
250 SOUTH STREET
NEW YORK, NY

DRAWING TITLE:
4TH FLOOR FRAMING PLAN - PART 3

SEAL & SIGNATURE:

DATE:	09/24/14	
PROJECT No:	1302510	
DRAWN:	CAD	REV:
CHK:	CL	
SCALE:		
DWG No:	**S-043.01**	
DOB PAGE No:	of	

DOB EMPLOYEE STAMP:

Damian Titus
Buildings
APPROVED
Under Directive 1 of 1975
AMENDED APPLICATION
Date: 10/08/2015
NYC Development Hub

DOB B-SCAN:

FILE NAME:
PLOT DATE:

4TH FLOOR FRAMING PLAN - PART 4

1 / S-044

SCALE: 3/16" = 1'-0"

NOTES:

1. FOR BALANCE OF INFORMATION SEE CORRESPONDING OVERALL FRAMING PLAN..
2. SEE TYPICAL DETAIL ON S-962 FOR SHEAR WALL POSTS / INTERIOR BEARING WALL.
3. FOR LOCATIONS OF SHEARWALL POSTS / BEARING WALL POSTS REFER TO S-201 THRU S-204 BY SPECIALTY ENGINEERS.(DATED 01.30.2015)
4. W-BEAM TOP & BOTTOM FLANGE TO BE CUT 6" WIDE.

KEY PLAN:

CHERRY ST · MANHATTAN BRIDGE · SOUTH STREET · FDR DRIVE (ELEVATED)

PROJECT NORTH · TRUE NORTH

DEVELOPER:
EXTELL DEVELOPMENT COMPANY
805 Third Ave, 7th Floor
New York, NY 10022
TEL: 212-712-6000 FAX: 212-712-6100

ARCHITECT OF RECORD:
AAI ARCHITECTS, P.C.
14 Wall Street, 2nd Floor
New York, NY 10005
TEL: 212-964-4040 FAX: 212-964-4090

INTERIOR DESIGNER:
MEYER DAVIS
180 Varick St, suite 404
New York, NY 10014
TEL: 212-627-5574

LANDSCAPE DESIGNER:
WEST 8 URBAN DESIGN & LANDSCAPE ARCHITECTURE P.C.
333 Hudson Street, Suite 905
New York, NY 10013
TEL: 212-285-0088 FAX: 212-285-0228

STRUCTURAL ENGINEERS:
WSP
228 East 45th Street
New York, NY 10017
TEL: 212-687-9888 FAX: 646-487-5501

MEP ENGINEERS:
ICOR ASSOCIATES, LLC
485 C Route 1 South, Suite 200
Iseline, NJ 08830
TEL: 908-272-3300 FAX: 908-272-4440

GEOTECHNICAL ENGINEERS:
LANGAN ENGINEERING & ENVIRONMENTAL SERVICES
21 Penn Plaza - 360 West 31st Street, 8th Floor
New York, NY 10001
TEL: 212.479.5400 FAX: 212.479.5444

No.	DESCRIPTION:	DATE:
1	DESIGN DEVELOPMENT	10-07-14
2	STEEL BID PACKAGE	02-24-15
3	ADDENDUM #3	03-27-15
4	50% CONSTRUCTION DOCUMENTS	04-08-15
5	ADDENDUM #4	04-24-15
6	ADDENDUM #10	07-20-15
7	ISSUED FOR FILING	07-28-15

Discrepancies must be reported immediately to the Architect before proceeding. Only figured dimensions are to be used. Contractors must check all dimensions on site. This drawing is protected by copyright.

ALL DIMENSIONS ARE SHOWN IN IMPERIAL.

CONSULTANT: WSP

PROJECT:
250 SOUTH STREET
NEW YORK, NY

DRAWING TITLE:
4TH FLOOR FRAMING PLAN - PART 4

SEAL & SIGNATURE:

DATE:	09/24/14
PROJECT No:	1302510
DRAWN:	CAD
REV:	
CHK:	CL
SCALE:	
DWG No:	**S-044.01**
DOB PAGE No:	of

DOB EMPLOYEE STAMP: Damian Titus · NYC Buildings · APPROVED · Under Directive 2 of 1975 · AMENDED APPLICATION · Date: 10/08/2015 · NYC Development Hub

DOB B-SCAN:

DEPT OF BLDGS 121185528 Job Number · ES896124182 Scan Code

30" x 42" Arch E1 - SHEET SIZE

FILE NAME: PLOT DATE:

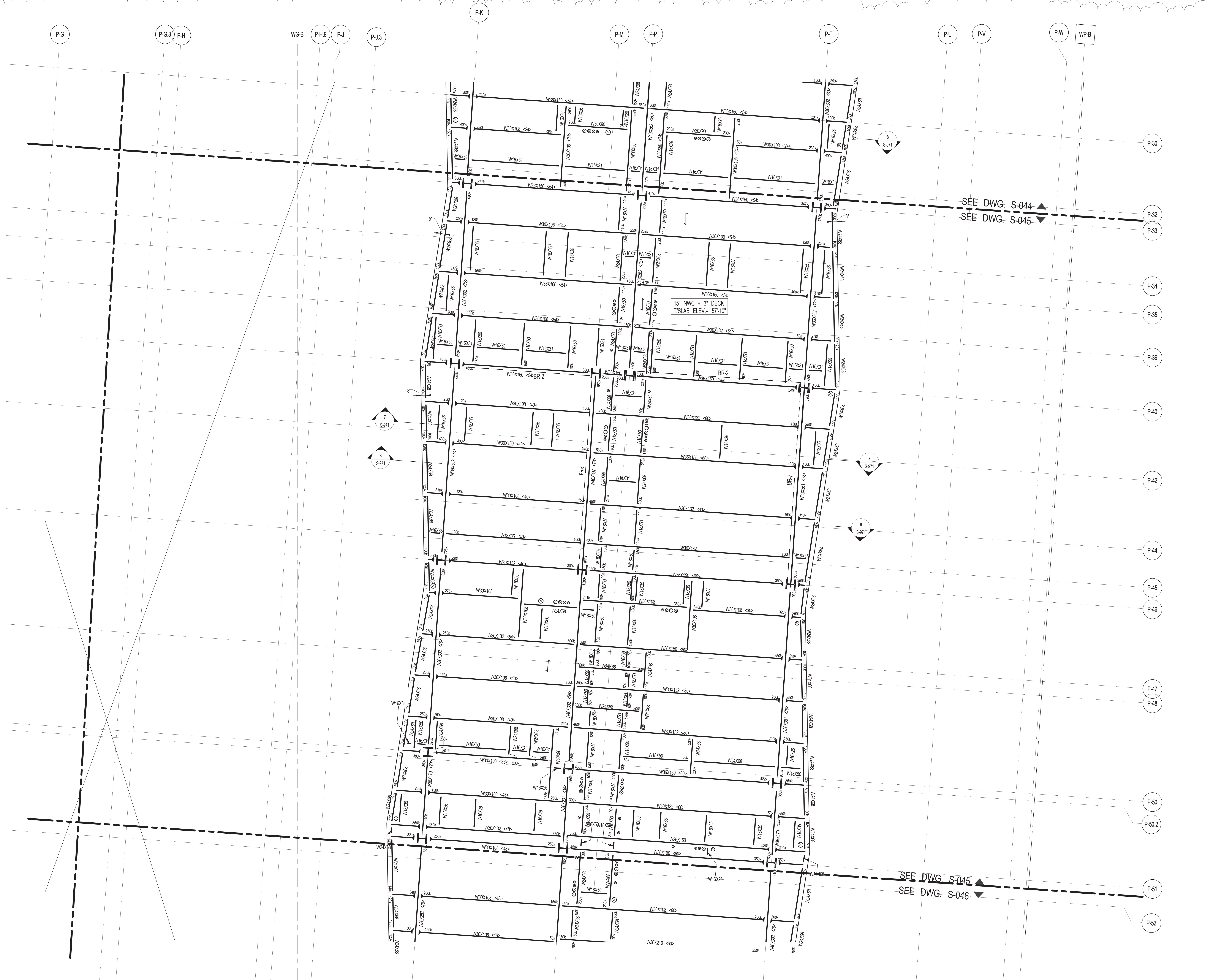

1 / S-045 **4TH FLOOR FRAMING PLAN - PART 5**

SCALE: 3/16" = 1'-0"

NOTES:

1. FOR BALANCE OF INFORMATION SEE CORRESPONDING OVERALL FRAMING PLAN..
2. SEE TYPICAL DETAIL ON S-962 FOR SHEAR WALL POSTS / INTERIOR BEARING WALL.
3. FOR LOCATIONS OF SHEARWALL POSTS / BEARING WALL POSTS REFER TO S-201 THRU S-204 BY SPECIALTY ENGINEERS.(DATED 01.30.2015)
4. W-BEAM TOP & BOTTOM FLANGE TO BE CUT 6" WIDE.

KEY PLAN: CHERRY ST / SOUTH STREET / FDR DRIVE (ELEVATED) / MANHATTAN BRIDGE

PROJECT NORTH / TRUE NORTH

DEVELOPER:
EXTELL DEVELOPMENT COMPANY
805 Third Ave, 7th Floor
New York, NY 10022
TEL: 212-712-6000 FAX: 212-712-6100

ARCHITECT OF RECORD:
AAI ARCHITECTS, P.C.
14 Wall Street, 2nd Floor
New York, NY 10005
TEL: 212-964-4040 FAX: 212-964-4090

INTERIOR DESIGNER:
MEYER DAVIS
180 Varick St, suite 404
New York, NY 10014
TEL: 212-627-5574

LANDSCAPE DESIGNER:
WEST 8 URBAN DESIGN & LANDSCAPE ARCHITECTURE P.C.
333 Hudson Street, Suite 905
New York, NY 10013
TEL: 212-285-0088 FAX: 212-285-0228

STRUCTURAL ENGINEERS:
WSP
228 East 45th Street
New York, NY 10017
TEL: 212-687-9888 FAX: 646-487-5501

MEP ENGINEERS:
ICOR ASSOCIATES, LLC
485 C Route 1 South, Suite 200
Iseline, NJ 08830
TEL: 908-272-3300 FAX: 908-272-4440

GEOTECHNICAL ENGINEERS:
LANGAN ENGINEERING & ENVIRONMENTAL SERVICES
21 Penn Plaza - 360 West 31st Street, 8th Floor
New York, NY 10001
TEL: 212.479.5400 FAX: 212.479.5444

No.	DESCRIPTION:	DATE:
1	STEEL BID PACKAGE	02-24-15
2	ADDENDUM #3	03-27-15
3	50% CONSTRUCTION DOCUMENTS	04-08-15
4	ADDENDUM #4	04-24-15
5	ADDENDUM #5	05-01-15
6	ADDENDUM #10	07-20-15
7	ISSUED FOR FILING	07-28-15

Discrepancies must be reported immediately to the Architect before proceeding. Only figured dimensions are to be used. Contractors must check all dimensions on site. This drawing is protected by copyright.

ALL DIMENSIONS ARE SHOWN IN IMPERIAL.

CONSULTANT: WSP

PROJECT:
250 SOUTH STREET
NEW YORK, NY

DRAWING TITLE:
4TH FLOOR FRAMING PLAN - PART 5

SEAL & SIGNATURE: STATE OF NEW YORK · AHMAD RAHIMIAN · No. 065537 · LICENSED PROFESSIONAL ENGINEER

DATE:	02/20/15
PROJECT No:	1302510
DRAWN:	CAD
CHK:	CL
SCALE:	As indicated
REV:	
DWG No:	**S-045.01**
DOB PAGE No:	of

DOB EMPLOYEE STAMP:
Damian Titus
Buildings
APPROVED
Under Directive 2 of 1975
AMENDED APPLICATION
Date: 10/08/2015
NYC Development Hub

DOB B-SCAN:

DEPT OF BLDGS 121185528 Job Number
ES772234144 Scan Code
30" x 42" Arch E1 - SHEET SIZE
FILE NAME:
PLOT DATE:

DEPT OF BLDGS 121185538 Job Number
E-5452 7699579 Scan Code

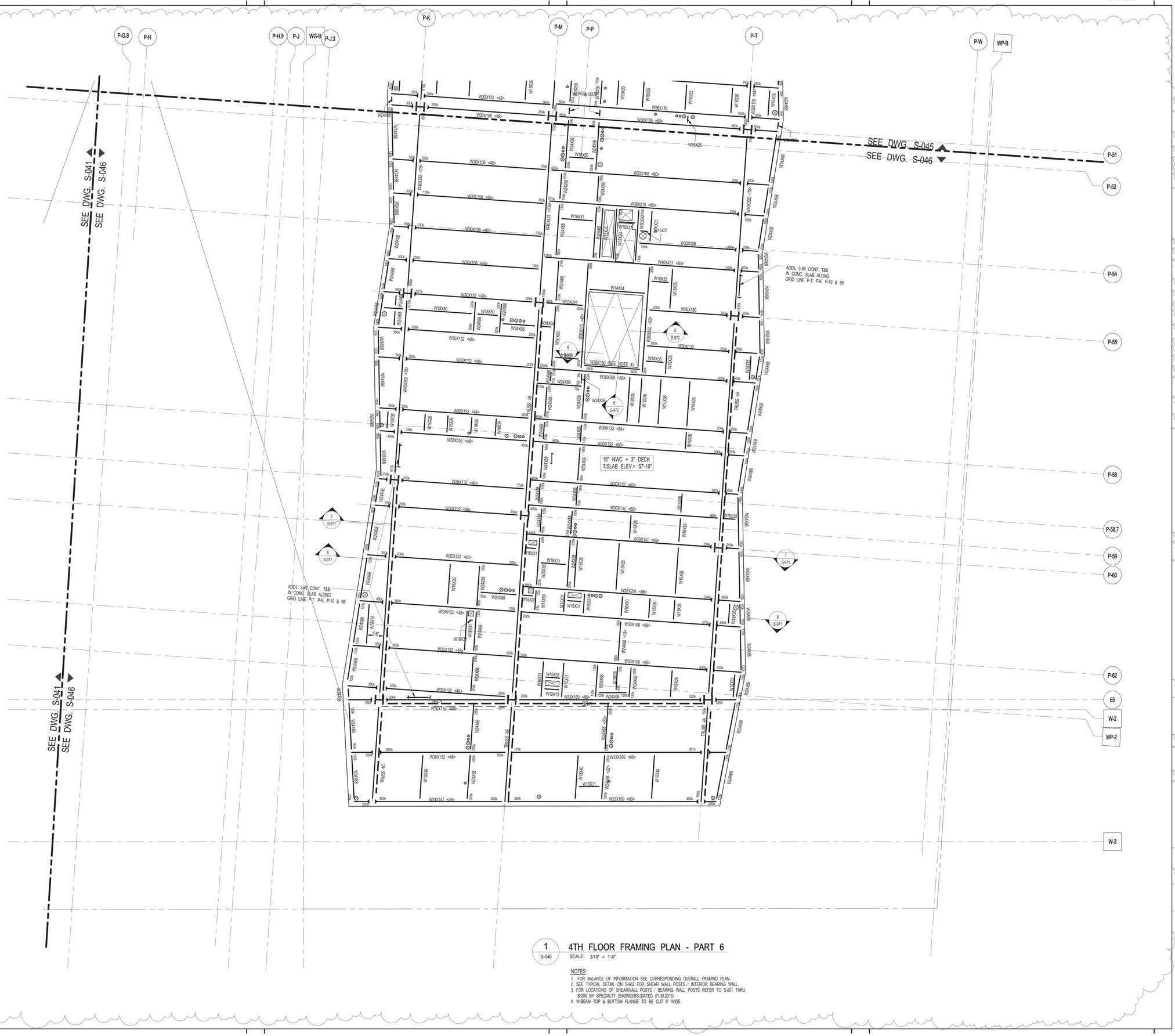

1 / S-046 — 4TH FLOOR FRAMING PLAN - PART 6
SCALE: 3/16" = 1'-0"

NOTES:
1. FOR BALANCE OF INFORMATION SEE CORRESPONDING OVERALL FRAMING PLAN.
2. SEE TYPICAL DETAIL ON S-962 FOR SHEAR WALL POSTS / INTERIOR BEARING WALL.
3. FOR LOCATIONS OF SHEARWALL POSTS / BEARING WALL POSTS REFER TO S-201 THRU S-204 BY SPECIALTY ENGINEERS (DATED 01.30.2015)
4. W-BEAM TOP & BOTTOM FLANGE TO BE CUT 6" WIDE.

KEY PLAN:
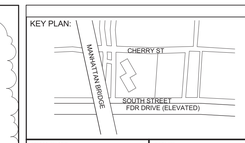

PROJECT NORTH | TRUE NORTH

DEVELOPER:
EXTELL DEVELOPMENT COMPANY
805 Third Ave, 7th Floor
New York, NY 10022
TEL: 212-712-6000 FAX: 212-712-6100

ARCHITECT OF RECORD:
AAI ARCHITECTS, P.C.
14 Wall Street, 2nd Floor
New York, NY 10005
TEL: 212-964-4040 FAX: 212-964-4090

INTERIOR DESIGNER:
MEYER DAVIS
180 Varick St, suite 404
New York, NY 10014
TEL: 212-627-5574

LANDSCAPE DESIGNER:
WEST 8 URBAN DESIGN & LANDSCAPE ARCHITECTURE P.C.
333 Hudson Street, Suite 905
New York, NY 10013
TEL: 212-285-0088 FAX: 212-285-0228

STRUCTURAL ENGINEERS:
WSP
228 East 45th Street
New York, NY 10017
TEL: 212-687-9888 FAX: 646-487-5501

MEP ENGINEERS:
ICOR ASSOCIATES, LLC
485 C Route 1 South, Suite 200
Iseline, NJ 08830
TEL: 908-272-3300 FAX: 908-272-4440

GEOTECHNICAL ENGINEERS:
LANGAN ENGINEERING & ENVIRONMENTAL SERVICES
21 Penn Plaza - 360 West 31st Street, 8th Floor
New York, NY 10001
TEL: 212.479.5400 FAX: 212.479.5444

No.	DESCRIPTION:	DATE:
1	STEEL BID PACKAGE	02-24-15
2	ADDENDUM #3	03-27-15
3	50% CONSTRUCTION DOCUMENTS	04-08-15
4	ADDENDUM #4	04-24-15
5	ADDENDUM #5	05-01-15
6	ADDENDUM #10	07-20-15
7	ISSUED FOR FILING	07-28-15

Discrepancies must be reported immediately to the Architect before proceeding. Only figured dimensions are to be used. Contractors must check all dimensions on site. This drawing is protected by copyright.

ALL DIMENSIONS ARE SHOWN IN IMPERIAL.

CONSULTANT:
WSP

PROJECT:
250 SOUTH STREET
NEW YORK, NY

DRAWING TITLE:
4TH FLOOR FRAMING PLAN - PART 6

SEAL & SIGNATURE:
STATE OF NEW YORK — RICHARD RAMNARAIN — No. 085571 — LICENSED PROFESSIONAL ENGINEER

DATE:	02/20/15
PROJECT No:	1302510
DRAWN: CAD	REV:
CHK: CL	
SCALE: As indicated	
DWG No:	**S-046.01**
DOB PAGE No:	of

DOB EMPLOYEE STAMP:
Damian Titus
Buildings
APPROVED
Under Directive 2 of 1975
AMENDED APPLICATION
Date: 10/08/2015
NYC Development Hub

DOB B-SCAN:

30" x 42" Arch E1 - SHEET SIZE

FILE NAME:
PLOT DATE:

30" x 42" Arch E1 - SHEET SIZE

DEPT OF BLDGS121185563 Job Number
E1561116959687 Scan Code

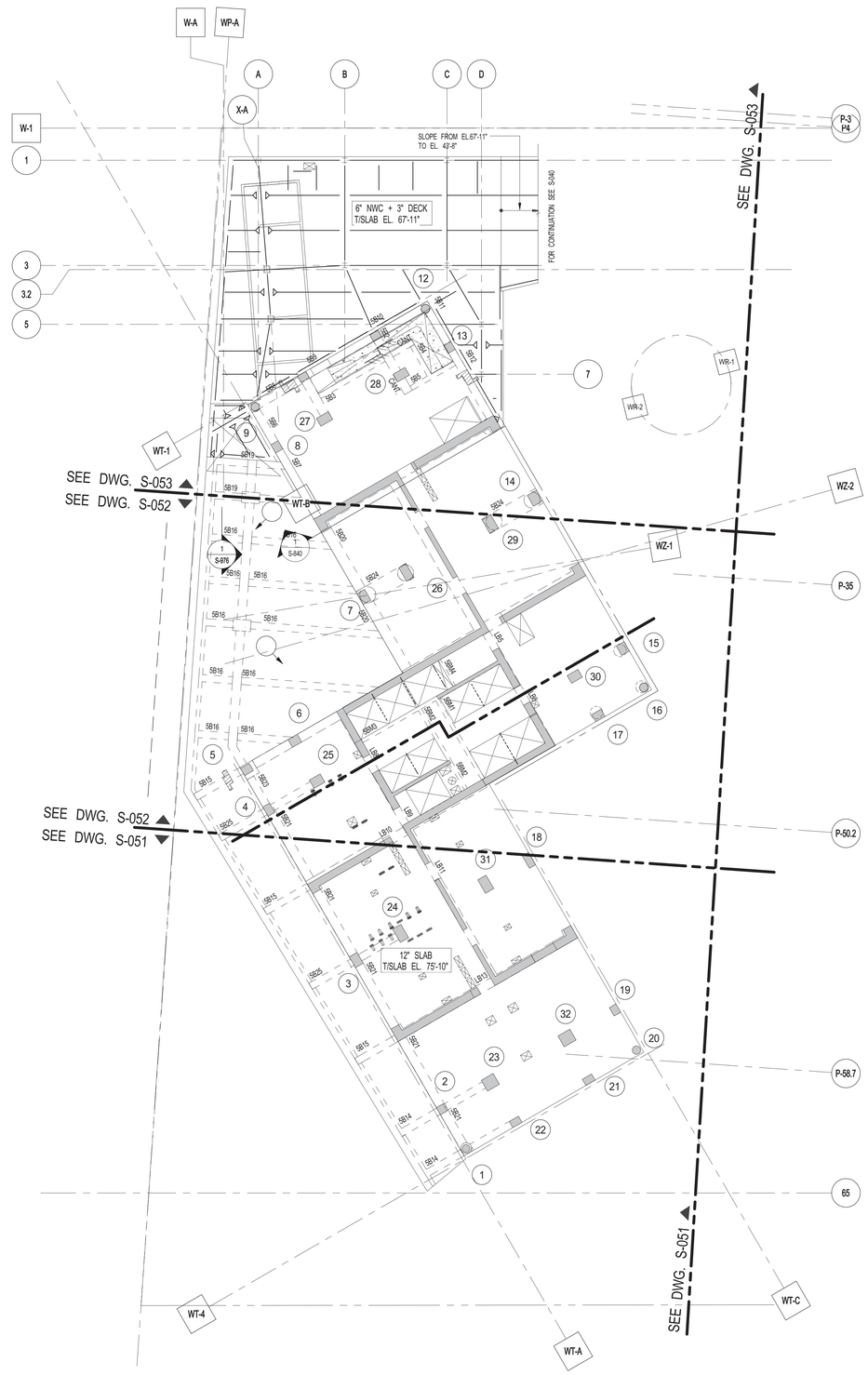

1 S-050 **5TH FLOOR OVERALL FRAMING PLAN**
SCALE: 1/16" = 1'-0"

CONCRETE NOTES:

1. TOP OF SLAB ELEVATION SEE PLAN.
2. SLAB TO BE 12" THICK U.O.N. THUS ▭ ON PLAN.
3. BOTTOM REINFORCEMENT TO BE #5@12 CONT. E.W. FOR 12" SLAB, FOR ADDITIONAL REINFORCEMENT SEE PLAN.
4. FOR DETAILS OF THE INTEGRITY REINFORCEMENT SEE DRAWING S-965.
5. FOR BALANCE OF NOTES SEE DRAWING S-010.

5TH FLOOR BEAM SCHEDULE

BEAM MARK	SIZE WIDTH	SIZE DEPTH	REINFORCEMENT BOTTOM CONTINUOUS	REINFORCEMENT TOP CONTINUOUS	STIRRUPS TYPE	STIRRUPS SIZE	STIRRUPS SPACING	REMARKS
5B1	30	133	6-#9	6-#9	1B	#5	@12	#6@10 HORIZ. E.F., CONT.
5B2	30	94/133	6-#9	6-#9	1B	#5	@12	#6@10 HORIZ. E.F., CONT.
5B3	18	58	3-#9	3-#9	1	#4	@12	#4@8 HORIZ. E.F., CONT.
5B4	16	58	2-#9	2-#7	1	#4	@12	#4@8 HORIZ. E.F., CONT.
5B5	16	58	2-#9	2-#9	1	#4	@12	#4@8 HORIZ. E.F., CONT.
5B6	28	114	4-#9	4-#9	1	#5	@12	#6@10 HORIZ. E.F., CONT.
5B7	28	102	4-#9	4-#9	1	#5	@12	#6@10 HORIZ. E.F., CONT.
5B8	26	115/133	4-#9	4-#9	1	#5	@12	#6@10 HORIZ. E.F., CONT.
5B9	26	99/133	4-#9	4-#9	1	#5	@12	#6@10 HORIZ. E.F., CONT.
5B10	26	133	4-#9	4-#9	1	#5	@12	#6@10 HORIZ. E.F., CONT.
5B11	26	150	4-#9	4-#9	1	#5	@12	#6@10 HORIZ. E.F., CONT.
5B12	26	150	4-#9	4-#9	1	#5	@12	#6@10 HORIZ. E.F., CONT.
5B13	12	48	4-#8 (2 LAYERS)	4-#8 (2 LAYERS)	1	#4	@12	
5B14	24	48/ 66	4-#11	8-#11 (2 LAYERS)	2	#4	@12	#5@10 HORIZ. E.F., SEE NOTE
5B15	24	54	4-#11	8-#11 (2 LAYERS)	2	#4	@12	#5@10 HORIZ. E.F., CONT.
5B16	24	48	6-#11 (2 LAYERS)	3-#10	1B	#4	@12	#4@10 HORIZ. E.F., CONT ADD'L. REBAR SHOWN ON PLAN.
5B19	24	48	3-#10	6-#10 (2 LAYERS)	1	#4		
5B20	36	66	6-#11	6-#11	2	#4	@12	#5@10 HORIZ. E.F., CONT.
5B21	30	30	4-#11	4-#11	2	#4	@12	
5B22	30	60	15-#11 (3 LAYERS)	15-#11 (3 LAYERS)	2A	#5	@8	#9@10 HORIZ. E.F. CONT.(MECH. SPLICE ONLY)
5B23	26	60/78	3-#11	6-#11 (2 LAYERS)	2A	#4	@12	#11@10 HORIZ. E.F., CONT.
5B24	56	60	10-#11	24-#11 (2 LAYERS)	3	#5	@10	#10@6 HORIZ. E.F., CONT.
5B25	24	54/72	4-#11	8-#11 (2 LAYERS)	2	#4	@12	#5@10 HORIZ. E.F., SEE NOTE
5BM1	12	24	3-#11	2-#11	1	#4	@10	
5BM2	12	24	2-#9	2-#9	1	#4	@10	
5BM3	12	24	2-#11	2-#11	1	#4	@6	
5BM4	8	12	2-#6	2-#6	1	#3	@5	

STIRRUP TYPES

KEY PLAN:

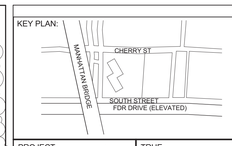

PROJECT NORTH | TRUE NORTH

DEVELOPER:
EXTELL DEVELOPMENT COMPANY
805 Third Ave, 7th Floor
New York, NY 10022
TEL: 212-712-6000 FAX: 212-712-6100

ARCHITECT OF RECORD:
AAI ARCHITECTS, P.C.
14 Wall Street, 2nd Floor
New York, NY 10005
TEL: 212-964-4040 FAX: 212-964-4090

INTERIOR DESIGNER:
MEYER DAVIS
180 Varick St, suite 404
New York, NY 10014
TEL: 212-627-5574

LANDSCAPE DESIGNER:
WEST 8 URBAN DESIGN & LANDSCAPE ARCHITECTURE P.C.
333 Hudson Street, Suite 905
New York, NY 10013
TEL: 212-285-0088 FAX: 212-285-0228

STRUCTURAL ENGINEERS:
WSP
228 East 45th Street
New York, NY 10017
TEL: 212-687-9888 FAX: 646-487-5501

MEP ENGINEERS:
ICOR ASSOCIATES, LLC
485 C Route 1 South, Suite 200
Iseline, NJ 08830
TEL: 908-272-3300 FAX: 908-272-4440

GEOTECHNICAL ENGINEERS:
LANGAN ENGINEERING & ENVIRONMENTAL SERVICES
21 Penn Plaza - 360 West 31st Street, 8th Floor
New York, NY 10001
TEL: 212.479.5400 FAX: 212.479.5444

No.	DESCRIPTION:	DATE:
1	50% SD	02-28-14
2	100%SD	04-25-14
3	50% DD	08-01-14
4	DESIGN DEVELOPMENT	10-07-14
5	STEEL BID PACKAGE	02-24-15
6	CONCRETE BID PACKAGE	03-06-15
7	ADDENDUM #3	03-27-15
8	50% CONSTRUCTION DOCUMENTS	04-08-15
9	ADDENDUM #4	04-24-15
10	ISSUED FOR FILING	07-28-15

Discrepancies must be reported immediately to the Architect before proceeding. Only figured dimensions are to be used. Contractors must check all dimensions on site. This drawing is protected by copyright.

ALL DIMENSIONS ARE SHOWN IN IMPERIAL.

CONSULTANT: WSP

PROJECT:
250 SOUTH STREET
NEW YORK, NY

DRAWING TITLE:
5TH FLOOR OVERALL FRAMING PLAN

SEAL & SIGNATURE:

DATE:	02/24/14
PROJECT No:	1302510
DRAWN: CAD	REV:
CHK: CL	
SCALE:	
DWG No:	**S-050.01**
DOB PAGE No:	of

DOB EMPLOYEE STAMP:

DOB B-SCAN:

FILE NAME:
PLOT DATE:

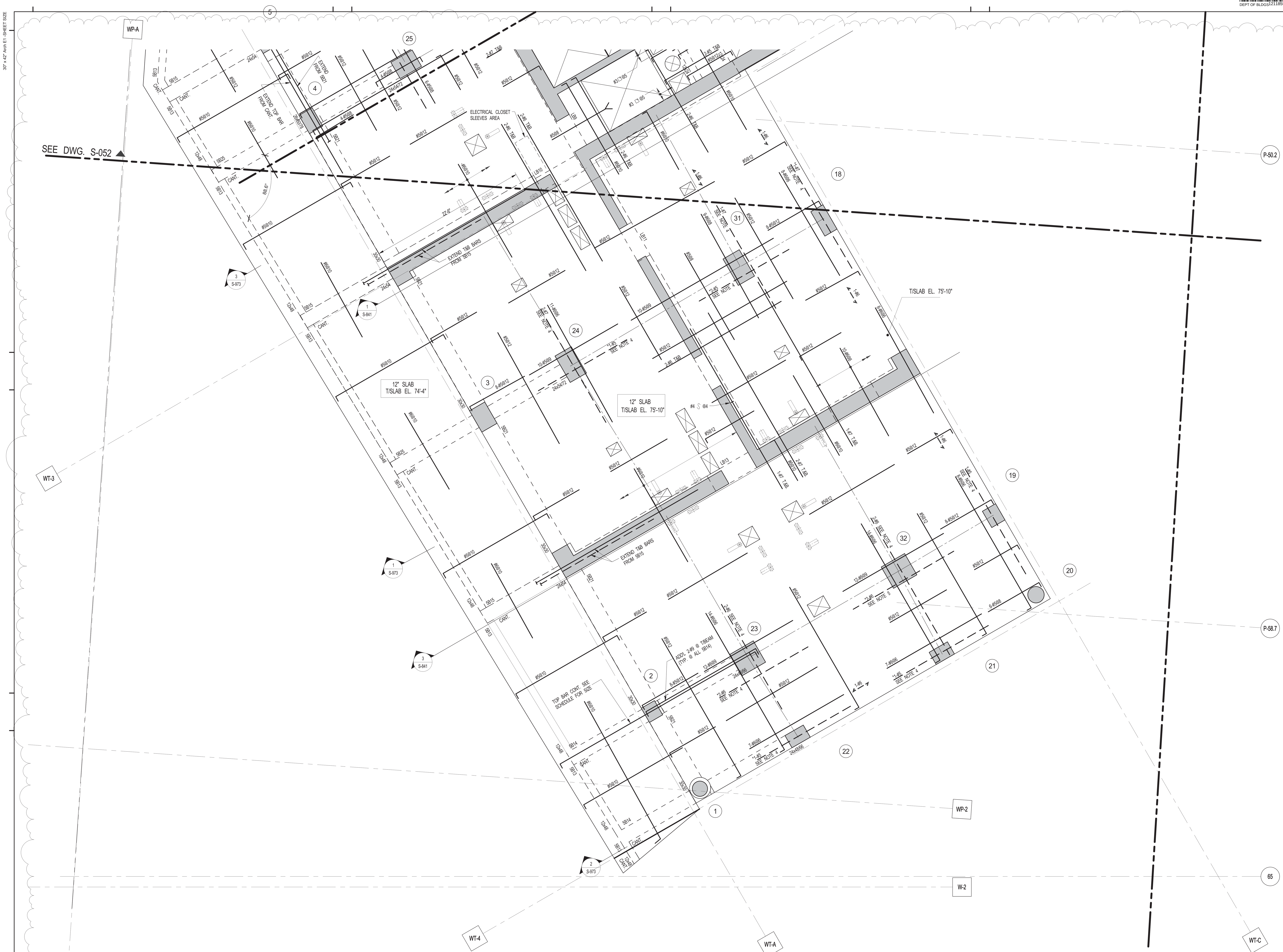

1 5TH FLOOR FRAMING PLAN - PART 1
S-051 SCALE: 3/16" = 1'-0"

NOTE: FOR BALANCE OF INFORMATION SEE CORRESPONDING FRAMING PLAN

KEY PLAN:

PROJECT NORTH | TRUE NORTH

DEVELOPER:
EXTELL DEVELOPMENT COMPANY
805 Third Ave, 7th Floor
New York, NY 10022
TEL: 212-712-6000 FAX: 212-712-6100

ARCHITECT OF RECORD:
AAI ARCHITECTS, P.C.
14 Wall Street, 2nd Floor
New York, NY 10005
TEL: 212-964-4040 FAX: 212-964-4090

INTERIOR DESIGNER:
MEYER DAVIS
180 Varick St, suite 404
New York, NY 10014
TEL: 212-627-5574

LANDSCAPE DESIGNER:
WEST 8 URBAN DESIGN & LANDSCAPE ARCHITECTURE P.C.
333 Hudson Street, Suite 905
New York, NY 10013
TEL: 212-285-0088 FAX: 212-285-0228

STRUCTURAL ENGINEERS:
WSP
228 East 45th Street
New York, NY 10017
TEL: 212-687-9888 FAX: 646-487-5501

MEP ENGINEERS:
ICOR ASSOCIATES, LLC
485 C Route 1 South, Suite 200
Iseline, NJ 08830
TEL: 908-272-3300 FAX: 908-272-4440

GEOTECHNICAL ENGINEERS:
LANGAN ENGINEERING & ENVIRONMENTAL SERVICES
21 Penn Plaza - 360 West 31st Street, 8th Floor
New York, NY 10001
TEL: 212.479.5400 FAX: 212.479.5444

No.	DESCRIPTION:	DATE:
1	DESIGN DEVELOPMENT	10-07-14
2	STEEL BID PACKAGE	02-24-15
3	CONCRETE BID PACKAGE	03-06-15
4	50% CONSTRUCTION DOCUMENTS	04-08-15
5	ISSUED FOR FILING	07-28-15

Discrepancies must be reported immediately to the Architect before proceeding. Only figured dimensions are to be used. Contractors must check all dimensions on site. This drawing is protected by copyright.

ALL DIMENSIONS ARE SHOWN IN IMPERIAL.

CONSULTANT:
WSP

PROJECT:
250 SOUTH STREET
NEW YORK, NY

DRAWING TITLE:
5TH FLOOR FRAMING PLAN - PART 1

SEAL & SIGNATURE:

DATE:	09/24/14
PROJECT No:	1302510
DRAWN:	CAD
CHK:	CL
SCALE:	
DWG No:	**S-051.01**
DOB PAGE No:	of

DOB EMPLOYEE STAMP: Damian Titus
NYC Buildings APPROVED Under Directive 2 of 1975 AMENDED APPLICATION Date: 10/08/2015 NYC Development Hub

DOB B-SCAN:

DEPT OF BLDGS 121105539 Job Number
E56471759773 Scan Code
30" x 42" Arch E1 - SHEET SIZE

SEE DWG. S-052

SEE DWG. S-052
SEE DWG. S-051

WP-A | W-A | WT-B | WT-3 | WT-A | WT-C

T/SLAB EL. 74'-6"

W24X55 | W16X36 | 5B19 | 5B22 | 5B13 | 5B16 | 5B15 | 5B17 | 5B10 | 5B6 | 5B7 | 5B4 | 5B5 | 5B1 | 5B2 | 5B3

CANT. | TE1 | 12x48 | 24x48 | 30x60 | 12x24 | 24x24

3-#10 ADD'L x 30'-0" IN BEAM (2ND LAYER)

2-#11 ADD'L IN BEAM (3RD LAYER)

3-#11 ADD'L x 30'-0" IN BEAM (2ND LAYER)

12" SLAB T/SLAB EL. 74'-4"

5-#11 H.E.F. ADD'L

2-#10 H.E.F.IN BM (EXTEND INTO SLAB)

EXTEND REBAR 6'-6" INTO WALL BELOW

EXTEND TOP BARS FROM CANT. BAR

EXTEND REBAR FROM SB15

EXTEND T&B BARS FROM SB15

ELECTRICAL CLOSET SLEEVES AREA

SW-1 | SW-4

8 | 7 | 6 | 5 | 4 | 14 | 29 | 26 | 25 | 15 | 30 | 16 | 17 | 31 | 18

1 S-974 | 1 S-975 | 1 S-976 | 2 S-842 | 1 S-840 | 2 S-840 | 3 S-973 | 1 S-841

1 S-052 5TH FLOOR FRAMING PLAN - PART 2
SCALE: 3/16" = 1'-0"
NOTE: FOR BALANCE OF INFORMATION SEE CORRESPONDING FRAMING PLAN

FILE NAME:
PLOT DATE:

KEY PLAN:
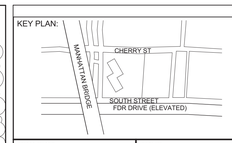

PROJECT NORTH | TRUE NORTH

DEVELOPER:
EXTELL DEVELOPMENT COMPANY
805 Third Ave, 7th Floor
New York, NY 10022
TEL: 212-712-6000 FAX: 212-712-6100

ARCHITECT OF RECORD:
AAI ARCHITECTS, P.C.
14 Wall Street, 2nd Floor
New York, NY 10005
TEL: 212-964-4040 FAX: 212-964-4090

INTERIOR DESIGNER:
MEYER DAVIS
180 Varick St, suite 404
New York, NY 10014
TEL: 212-627-5574

LANDSCAPE DESIGNER:
WEST 8 URBAN DESIGN & LANDSCAPE ARCHITECTURE P.C.
333 Hudson Street, Suite 905
New York, NY 10013
TEL: 212-285-0088 FAX: 212-285-0228

STRUCTURAL ENGINEERS:
WSP
228 East 45th Street
New York, NY 10017
TEL: 212-687-9888 FAX: 646-487-5501

MEP ENGINEERS:
ICOR ASSOCIATES, LLC
485 C Route 1 South, Suite 200
Iseline, NJ 08830
TEL: 908-272-3300 FAX: 908-272-4440

GEOTECHNICAL ENGINEERS:
LANGAN ENGINEERING & ENVIRONMENTAL SERVICES
21 Penn Plaza - 360 West 31st Street, 8th Floor
New York, NY 10001
TEL: 212.479.5400 FAX: 212.479.5444

No.	DESCRIPTION:	DATE:
1	DESIGN DEVELOPMENT	10-07-14
2	STEEL BID PACKAGE	02-24-15
3	CONCRETE BID PACKAGE	03-06-15
4	50% CONSTRUCTION DOCUMENTS	04-08-15
5	ISSUED FOR FILING	07-28-15

Discrepancies must be reported immediately to the Architect before proceeding. Only figured dimensions are to be used. Contractors must check all dimensions on site. This drawing is protected by copyright.

ALL DIMENSIONS ARE SHOWN IN IMPERIAL.

CONSULTANT:
WSP

PROJECT:
250 SOUTH STREET
NEW YORK, NY

DRAWING TITLE:
5TH FLOOR FRAMING PLAN - PART 2

SEAL & SIGNATURE:

DATE:	09/24/14
PROJECT No:	1302510
DRAWN: CAD	REV:
CHK: CL	
SCALE:	
DWG No:	**S-052.01**
DOB PAGE No:	of

DOB EMPLOYEE STAMP:
Damian Titus
Buildings
APPROVED
Under Directive 2 of 1975
AMENDED APPLICATION
Date: 10/08/2015
NYC Development Hub

DOB B-SCAN:

DEPT OF BLDGS121185539 Job Number
E3506787163S Scan Code
30" x 42" Arch E1 - SHEET SIZE

1 S-053 **5TH FLOOR FRAMING PLAN - PART 3**

SCALE: 3/16" = 1'-0"

NOTE: FOR BALANCE OF INFORMATION SEE CORRESPONDING FRAMING PLAN

KEY PLAN:

PROJECT NORTH

TRUE NORTH

DEVELOPER:
EXTELL DEVELOPMENT COMPANY
805 Third Ave, 7th Floor
New York, NY 10022
TEL: 212-712-6000 FAX: 212-712-6100

ARCHITECT OF RECORD:
AAI ARCHITECTS, P.C.
14 Wall Street, 2nd Floor
New York, NY 10005
TEL: 212-964-4040 FAX: 212-964-4090

INTERIOR DESIGNER:
MEYER DAVIS
180 Varick St, suite 404
New York, NY 10014
TEL: 212-627-5574

LANDSCAPE DESIGNER:
WEST 8 URBAN DESIGN & LANDSCAPE ARCHITECTURE P.C.
333 Hudson Street, Suite 905
New York, NY 10013
TEL: 212-285-0088 FAX: 212-285-0228

STRUCTURAL ENGINEERS:
WSP
228 East 45th Street
New York, NY 10017
TEL: 212-687-9888 FAX: 646-487-5501

MEP ENGINEERS:
ICOR ASSOCIATES, LLC
485 C Route 1 South, Suite 200
Iseline, NJ 08830
TEL: 908-272-3300 FAX: 908-272-4440

GEOTECHNICAL ENGINEERS:
LANGAN ENGINEERING & ENVIRONMENTAL SERVICES
21 Penn Plaza - 360 West 31st Street, 8th Floor
New York, NY 10001
TEL: 212.479.5400 FAX: 212.479.5444

No.	DESCRIPTION:	DATE:
1	DESIGN DEVELOPMENT	10-07-14
2	STEEL BID PACKAGE	02-24-15
3	CONCRETE BID PACKAGE	03-06-15
4	ADDENDUM #3	03-27-15
5	50% CONSTRUCTION DOCUMENTS	04-08-15
6	ADDENDUM #4	04-24-15
7	ISSUED FOR FILING	07-28-15

Discrepancies must be reported immediately to the Architect before proceeding. Only figured dimensions are to be used. Contractors must check all dimensions on site. This drawing is protected by copyright.

ALL DIMENSIONS ARE SHOWN IN IMPERIAL.

CONSULTANT: WSP

PROJECT:
250 SOUTH STREET
NEW YORK, NY

DRAWING TITLE:
5TH FLOOR FRAMING PLAN - PART 3

SEAL & SIGNATURE: STATE OF NEW YORK · RICHARD RAMINSKY · No. 065527 · LICENSED PROFESSIONAL ENGINEER

DATE:	09/24/14
PROJECT No:	1302510
DRAWN: CAD	REV:
CHK: CL	
SCALE:	
DWG No:	**S-053.01**
DOB PAGE No:	of

DOB EMPLOYEE STAMP: Damian Titus — Buildings — APPROVED — Under Directive 2 of 1975 — AMENDED APPLICATION — Date: 10/08/2015 — NYC Development Hub

DOB B-SCAN:

FILE NAME:
PLOT DATE:

30" x 42" Arch E1 - SHEET SIZE

DEPT OF BLDGS121185539 Job Number
E546245854 Scan Code

1 S-060 TYPICAL LOW-LEVEL (6TH-26TH) FLOOR OVERALL FRAMIMG PLAN

SCALE: 3/32" = 1'-0"

NOTES:

1. SLAB TO BE 9" THICK U.O.N. THUS ▭ ON PLAN.
2. BOTTOM REINFORCEMENT TO BE #4@12 CONT. E.W. FOR 9" SLAB, #4@10 CONT. E.W. FOR 10" U.O.N. ON PLAN. FOR ADDITIONAL REIFORCEMENT SEE PLAN
3. FOR DETAIL OF INTEGRITY REINF. ADDL INFORMATION SEE S-965.
4. FOR BALANCE OF NOTES SEE DRAWING S-010.

6TH-26TH FLOOR BEAM SCHEDULE

BEAM MARK	SIZE WIDTH	SIZE DEPTH	REINFORCEMENT BOTTOM CONTINUOUS	REINFORCEMENT TOP CONTINUOUS	STIRRUPS TYPE	STIRRUPS SIZE	STIRRUPS SPACING	REMARKS
6B1	12	24	2-#11	2-#11	1	#4	@6	
6B2	12	24	3-#11	2-#11	1	#4	@10	
6B3	12	24	2-#9	2-#9	1	#4	@10	
6B4	8	12	2-#6	2-#6	1	#3	@5	

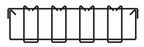

TYPE 5

STIRRUP TYPES

KEY PLAN:

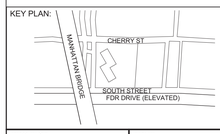

PROJECT NORTH

TRUE NORTH

DEVELOPER:
EXTELL DEVELOPMENT COMPANY
805 Third Ave, 7th Floor
New York, NY 10022
TEL: 212-712-6000 FAX: 212-712-6100

ARCHITECT OF RECORD:
AAI ARCHITECTS, P.C.
14 Wall Street, 2nd Floor
New York, NY 10005
TEL: 212-964-4040 FAX: 212-964-4090

INTERIOR DESIGNER:
MEYER DAVIS
180 Varick St, suite 404
New York, NY 10014
TEL: 212-627-5574

LANDSCAPE DESIGNER:
WEST 8 URBAN DESIGN & LANDSCAPE ARCHITECTURE P.C.
333 Hudson Street, Suite 905
New York, NY 10013
TEL: 212-285-0088 FAX: 212-285-0228

STRUCTURAL ENGINEERS:
WSP
228 East 45th Street
New York, NY 10017
TEL: 212-687-9888 FAX: 646-487-5501

MEP ENGINEERS:
ICOR ASSOCIATES, LLC
485 C Route 1 South, Suite 200
Iseline, NJ 08830
TEL: 908-272-3300 FAX: 908-272-4440

GEOTECHNICAL ENGINEERS:
LANGAN ENGINEERING & ENVIRONMENTAL SERVICES
21 Penn Plaza - 360 West 31st Street, 8th Floor
New York, NY 10001
TEL: 212.479.5400 FAX: 212.479.5444

No.	DESCRIPTION:	DATE:
1	50% SD	02-28-14
2	100%SD	04-25-14
3	50% DD	08-01-14
4	DESIGN DEVELOPMENT	10-07-14
5	CONCRETE BID PACKAGE	03-06-15
6	50% CONSTRUCTION DOCUMENTS	04-08-15
7	ISSUED FOR FILING	07-28-15

Discrepancies must be reported immediately to the Architect before proceeding. Only figured dimensions are to be used. Contractors must check all dimensions on site. This drawing is protected by copyright.

ALL DIMENSIONS ARE SHOWN IN IMPERIAL.

CONSULTANT:
WSP

PROJECT:
250 SOUTH STREET
NEW YORK, NY

DRAWING TITLE:
6TH-26TH FLOOR OVERALL FRAMING PLAN

SEAL & SIGNATURE:

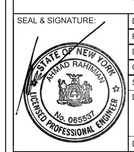

DATE:	02/24/14
PROJECT No:	1302510
DRAWN: CAD	REV:
CHK: CL	
SCALE:	
DWG No:	S-060.01
DOB PAGE No:	of

DOB EMPLOYEE STAMP:

DOB B-SCAN:

FILE NAME:
PLOT DATE:

DEPT OF BLDGS 121185528 Job Number
ES895751911 Scan Code

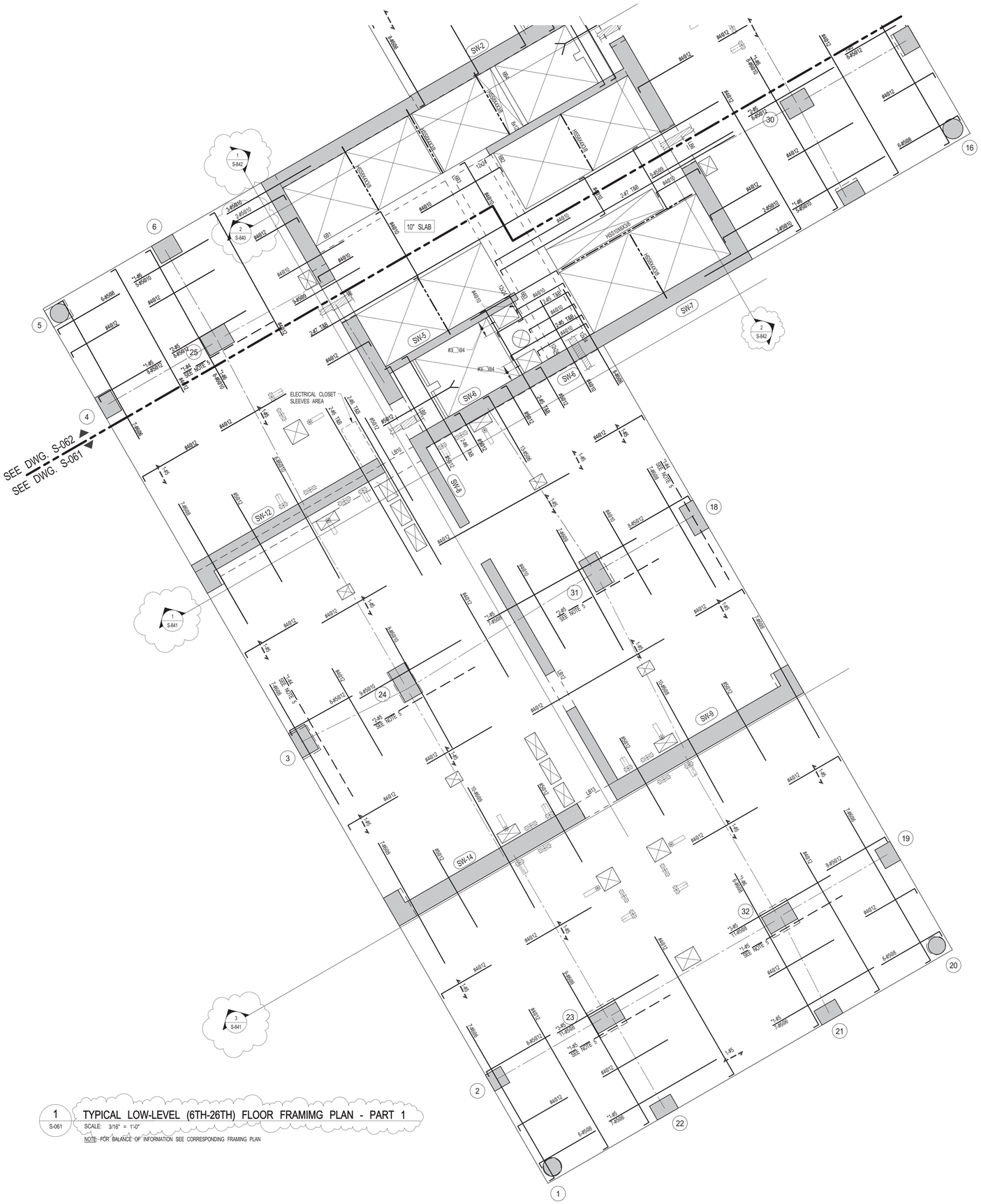

1 S-061 TYPICAL LOW-LEVEL (6TH-26TH) FLOOR FRAMIMG PLAN - PART 1

SCALE: 3/16" = 1'-0"

NOTE: FOR BALANCE OF INFORMATION SEE CORRESPONDING FRAMING PLAN

KEY PLAN:

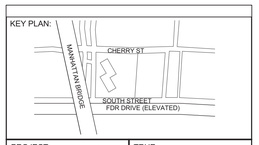

PROJECT NORTH

TRUE NORTH

DEVELOPER:
EXTELL DEVELOPMENT COMPANY
805 Third Ave, 7th Floor
New York, NY 10022
TEL: 212-712-6000 FAX: 212-712-6100

ARCHITECT OF RECORD:
AAI ARCHITECTS, P.C.
14 Wall Street, 2nd Floor
New York, NY 10005
TEL: 212-964-4040 FAX: 212-964-4090

INTERIOR DESIGNER:
MEYER DAVIS
180 Varick St, suite 404
New York, NY 10014
TEL: 212-627-5574

LANDSCAPE DESIGNER:
WEST 8 URBAN DESIGN & LANDSCAPE ARCHITECTURE P.C.
333 Hudson Street, Suite 905
New York, NY 10013
TEL: 212-285-0088 FAX: 212-285-0228

STRUCTURAL ENGINEERS:
WSP
228 East 45th Street
New York, NY 10017
TEL: 212-687-9888 FAX: 646-487-5501

MEP ENGINEERS:
ICOR ASSOCIATES, LLC
485 C Route 1 South, Suite 200
Iseline, NJ 08830
TEL: 908-272-3300 FAX: 908-272-4440

GEOTECHNICAL ENGINEERS:
LANGAN ENGINEERING & ENVIRONMENTAL SERVICES
21 Penn Plaza - 360 West 31st Street, 8th Floor
New York, NY 10001
TEL: 212.479.5400 FAX: 212.479.5444

No.	DESCRIPTION:	DATE:
1	DESIGN DEVELOPMENT	10-07-14
2	CONCRETE BID PACKAGE	03-06-15
3	50% CONSTRUCTION DOCUMENTS	04-08-15
4	ISSUED FOR FILING	07-28-15

Discrepancies must be reported immediately to the Architect before proceeding. Only figured dimensions are to be used. Contractors must check all dimensions on site. This drawing is protected by copyright.

ALL DIMENSIONS ARE SHOWN IN IMPERIAL.

CONSULTANT:
WSP

PROJECT:
250 SOUTH STREET
NEW YORK, NY

DRAWING TITLE:
6TH-26TH FLOOR FRAMIMG PLAN - PART 1

SEAL & SIGNATURE:
STATE OF NEW YORK
AMMAD RAHIMIAN
No. 065537
LICENSED PROFESSIONAL ENGINEER

DATE:	09/24/14
PROJECT No:	1302510
DRAWN: CAD	REV:
CHK: CL	
SCALE:	
DWG No:	S-061.01
DOB PAGE No:	of

DOB EMPLOYEE STAMP:
Damian Titus
Buildings
APPROVED
Under Directive 2 of 1975
AMENDED APPLICATION
Date: 10/08/2015
NYC Development Hub

DOB B-SCAN:

30" x 42" Arch E1 - SHEET SIZE

FILE NAME:
PLOT DATE:

1 TYPICAL LOW-LEVEL (6TH-26TH) FLOOR FRAMIMG PLAN - PART 2
S-062
SCALE: 3/16" = 1'-0"
NOTE: FOR BALANCE OF INFORMATION SEE CORRESPONDING FRAMING PLAN

KEY PLAN:

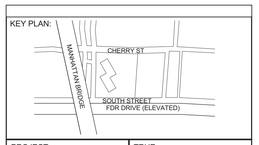

PROJECT NORTH

TRUE NORTH

DEVELOPER:
EXTELL DEVELOPMENT COMPANY
805 Third Ave, 7th Floor
New York, NY 10022
TEL: 212-712-6000 FAX: 212-712-6100

ARCHITECT OF RECORD:
AAI ARCHITECTS, P.C.
14 Wall Street, 2nd Floor
New York, NY 10005
TEL: 212-964-4040 FAX: 212-964-4090

INTERIOR DESIGNER:
MEYER DAVIS
180 Varick St, suite 404
New York, NY 10014
TEL: 212-627-5574

LANDSCAPE DESIGNER:
WEST 8 URBAN DESIGN & LANDSCAPE ARCHITECTURE P.C.
333 Hudson Street, Suite 905
New York, NY 10013
TEL: 212-285-0088 FAX: 212-285-0228

STRUCTURAL ENGINEERS:
WSP
228 East 45th Street
New York, NY 10017
TEL: 212-687-9888 FAX: 646-487-5501

MEP ENGINEERS:
ICOR ASSOCIATES, LLC
485 C Route 1 South, Suite 200
Iseline, NJ 08830
TEL: 908-272-3300 FAX: 908-272-4440

GEOTECHNICAL ENGINEERS:
LANGAN ENGINEERING & ENVIRONMENTAL SERVICES
21 Penn Plaza - 360 West 31st Street, 8th Floor
New York, NY 10001
TEL: 212.479.5400 FAX: 212.479.5444

No.	DESCRIPTION:	DATE:
1	DESIGN DEVELOPMENT	10-07-14
2	CONCRETE BID PACKAGE	03-06-15
3	50% CONSTRUCTION DOCUMENTS	04-08-15
4	ISSUED FOR FILING	07-28-15

Discrepancies must be reported immediately to the Architect before proceeding. Only figured dimensions are to be used. Contractors must check all dimensions on site. This drawing is protected by copyright.

ALL DIMENSIONS ARE SHOWN IN IMPERIAL.

CONSULTANT:
WSP

PROJECT:
250 SOUTH STREET
NEW YORK, NY

DRAWING TITLE:
6TH-26TH FLOOR FRAMIMG PLAN - PART 2

SEAL & SIGNATURE:
STATE OF NEW YORK
AHMAD RAHIMIAN
No. 085537
LICENSED PROFESSIONAL ENGINEER

DATE:	09/24/14
PROJECT No:	1302510
DRAWN: CAD	REV:
CHK: CL	
SCALE:	
DWG No:	S-062.01
DOB PAGE No:	of

DOB EMPLOYEE STAMP:
Damian Titus
Buildings
APPROVED
Under Directive 2 of 1975
AMENDED APPLICATION
Date: 10/08/2015
NYC Development Hub

DOB B-SCAN:

DEPT OF BLDGS121185539 Job Number
E1308925439T Scan Code

30" x 42" Arch E1 - SHEET SIZE

1 S-270

27TH FLOOR (MECAHANICAL) FRAMING PLAN

SCALE: 3/32" = 1'-0"

NOTES:

1. TOP OF SLAB ELEVATION TO BE 301'-2" U.O.N. ON PLAN
2. SLAB TO BE 12" THICK U.O.N. THUS ___ ON PLAN
3. TOP & BOTTOM REINFORCEMENT TO BE #5@12 CONT. E.W. FOR 12" SLAB U.O.N. ON PLAN. FOR ADDITIONAL REIFORCEMENT SEE PLAN
4. FOR BALANCE OF NOTES SEE DRAWING S-010.
5. FOR STR. INTEGRITY REINF. ADDL INFORMATION SEE S-965.

27TH FLOOR BEAM SCHEDULE

BEAM MARK	SIZE		REINFORCEMENT		STIRRUPS			REMARKS
	WIDTH	DEPTH	BOTTOM CONTINUOUS	TOP CONTINUOUS	TYPE	SIZE	SPACING	
27B2	12	24	3-#11	2-#11	1	#4	@10	
27B3	12	24	2-#9	2-#9	1	#4	@10	
27B4	8	12	2-#6	2-#6	1	#3	@5	

TYPE 1

STIRRUP TYPES

KEY PLAN:

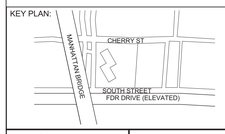

PROJECT NORTH

TRUE NORTH

DEVELOPER:
EXTELL DEVELOPMENT COMPANY
805 Third Ave, 7th Floor
New York, NY 10022
TEL: 212-712-6000 FAX: 212-712-6100

ARCHITECT OF RECORD:
AAI ARCHITECTS, P.C.
14 Wall Street, 2nd Floor
New York, NY 10005
TEL: 212-964-4040 FAX: 212-964-4090

INTERIOR DESIGNER:
MEYER DAVIS
180 Varick St, suite 404
New York, NY 10014
TEL: 212-627-5574

LANDSCAPE DESIGNER:
WEST 8 URBAN DESIGN & LANDSCAPE ARCHITECTURE P.C.
333 Hudson Street, Suite 905
New York, NY 10013
TEL: 212-285-0088 FAX: 212-285-0228

STRUCTURAL ENGINEERS:
WSP
228 East 45th Street
New York, NY 10017
TEL: 212-687-9888 FAX: 646-487-5501

MEP ENGINEERS:
ICOR ASSOCIATES, LLC
485 C Route 1 South, Suite 200
Iseline, NJ 08830
TEL: 908-272-3300 FAX: 908-272-4440

GEOTECHNICAL ENGINEERS:
LANGAN ENGINEERING & ENVIRONMENTAL SERVICES
21 Penn Plaza - 360 West 31st Street, 8th Floor
New York, NY 10001
TEL: 212.479.5400 FAX: 212.479.5444

No.	DESCRIPTION:	DATE:
1	50% SD	02-28-14
2	100%SD	04-25-14
3	50% DD	08-01-14
4	DESIGN DEVELOPMENT	10-07-14
5	CONCRETE BID PACKAGE	03-06-15
6	50% CONSTRUCTION DOCUMENTS	04-08-15
7	ISSUED FOR FILING	07-28-15

Discrepancies must be reported immediately to the Architect before proceeding. Only figured dimensions are to be used. Contractors must check all dimensions on site. This drawing is protected by copyright.

ALL DIMENSIONS ARE SHOWN IN IMPERIAL.

CONSULTANT: WSP

PROJECT:
250 SOUTH STREET
NEW YORK, NY

DRAWING TITLE:
27TH FLOOR (MECHANICAL) OVERALL FRAMING PLAN

SEAL & SIGNATURE:

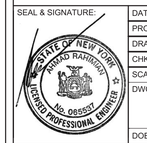

DATE:	02/28/14
PROJECT No:	1302510
DRAWN: CAD	REV:
CHK: CL	
SCALE:	
DWG No:	**S-270.01**
DOB PAGE No:	of

DOB EMPLOYEE STAMP:

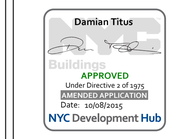

DOB B-SCAN:

FILE NAME:
PLOT DATE:

DEPT OF BLDGS121105039 Job Number
IES7489059049 Scan Code

30" x 42" Arch E1 - SHEET SIZE

KEY PLAN:

PROJECT NORTH

TRUE NORTH

DEVELOPER:
EXTELL DEVELOPMENT COMPANY
805 Third Ave, 7th Floor
New York, NY 10022
TEL: 212-712-6000 FAX: 212-712-6100

ARCHITECT OF RECORD:
AAI ARCHITECTS, P.C.
14 Wall Street, 2nd Floor
New York, NY 10005
TEL: 212-964-4040 FAX: 212-964-4090

INTERIOR DESIGNER:
MEYER DAVIS
180 Varick St, suite 404
New York, NY 10014
TEL: 212-627-5574

LANDSCAPE DESIGNER:
WEST 8 URBAN DESIGN & LANDSCAPE ARCHITECTURE P.C.
333 Hudson Street, Suite 905
New York, NY 10013
TEL: 212-285-0088 FAX: 212-285-0228

STRUCTURAL ENGINEERS:
WSP
228 East 45th Street
New York, NY 10017
TEL: 212-687-9888 FAX: 646-487-5501

MEP ENGINEERS:
ICOR ASSOCIATES, LLC
485 C Route 1 South, Suite 200
Iseline, NJ 08830
TEL: 908-272-3300 FAX: 908-272-4440

GEOTECHNICAL ENGINEERS:
LANGAN ENGINEERING & ENVIRONMENTAL SERVICES
21 Penn Plaza - 360 West 31st Street, 8th Floor
New York, NY 10001
TEL: 212.479.5400 FAX: 212.479.5444

No.	DESCRIPTION:	DATE:
1	DESIGN DEVELOPMENT	10-07-14
2	CONCRETE BID PACKAGE	03-06-15
3	50% CONSTRUCTION DOCUMENTS	04-08-15
4	ISSUED FOR FILING	07-28-15

Discrepancies must be reported immediately to the Architect before proceeding. Only figured dimensions are to be used. Contractors must check all dimensions on site. This drawing is protected by copyright.

ALL DIMENSIONS ARE SHOWN IN IMPERIAL.

CONSULTANT:
WSP

PROJECT:
250 SOUTH STREET
NEW YORK, NY

DRAWING TITLE:
27TH FLOOR (MECAHANICAL) FRAMING PLAN - PART 1

SEAL & SIGNATURE:
STATE OF NEW YORK · AHMAD RAFIQUE · No. 065027 · LICENSED PROFESSIONAL ENGINEER

DATE:	09/24/14
PROJECT No:	1302510
DRAWN: CAD	REV:
CHK: CL	
SCALE:	
DWG No:	**S-271.01**
DOB PAGE No:	of

DOB EMPLOYEE STAMP:
Damian Titus
Buildings
APPROVED
Under Directive 2 of 1975
AMENDED APPLICATION
Date: 10/08/2015
NYC Development Hub

DOB B-SCAN:

FILE NAME:
PLOT DATE:

DEPT OF BLDGS121185529 Job Number
B1578240302I1 Scan Code
30" x 42" Arch E1 - SHEET SIZE

1 S-272 27TH FLOOR (MECAHANICAL) FRAMING PLAN - PART 2
SCALE: 3/16" = 1'-0"
NOTE: FOR BALANCE OF INFORMATION SEE CORRESPONDING FRAMING PLAN

KEY PLAN:

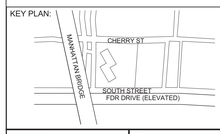

PROJECT NORTH

TRUE NORTH

DEVELOPER:
EXTELL DEVELOPMENT COMPANY
805 Third Ave, 7th Floor
New York, NY 10022
TEL: 212-712-6000 FAX: 212-712-6100

ARCHITECT OF RECORD:
AAI ARCHITECTS, P.C.
14 Wall Street, 2nd Floor
New York, NY 10005
TEL: 212-964-4040 FAX: 212-964-4090

INTERIOR DESIGNER:
MEYER DAVIS
180 Varick St, suite 404
New York, NY 10014
TEL: 212-627-5574

LANDSCAPE DESIGNER:
WEST 8 URBAN DESIGN & LANDSCAPE ARCHITECTURE P.C.
333 Hudson Street, Suite 905
New York, NY 10013
TEL: 212-285-0088 FAX: 212-285-0228

STRUCTURAL ENGINEERS:
WSP
228 East 45th Street
New York, NY 10017
TEL: 212-687-9888 FAX: 646-487-5501

MEP ENGINEERS:
ICOR ASSOCIATES, LLC
485 C Route 1 South, Suite 200
Iseline, NJ 08830
TEL: 908-272-3300 FAX: 908-272-4440

GEOTECHNICAL ENGINEERS:
LANGAN ENGINEERING & ENVIRONMENTAL SERVICES
21 Penn Plaza - 360 West 31st Street, 8th Floor
New York, NY 10001
TEL: 212.479.5400 FAX: 212.479.5444

No.	DESCRIPTION:	DATE:
1	DESIGN DEVELOPMENT	10-07-14
2	CONCRETE BID PACKAGE	03-06-15
3	50% CONSTRUCTION DOCUMENTS	04-08-15
4	ISSUED FOR FILING	07-28-15

Discrepancies must be reported immediately to the Architect before proceeding. Only figured dimensions are to be used. Contractors must check all dimensions on site. This drawing is protected by copyright.

ALL DIMENSIONS ARE SHOWN IN IMPERIAL.

CONSULTANT:
WSP

PROJECT:
250 SOUTH STREET
NEW YORK, NY

DRAWING TITLE:
27TH FLOOR (MECAHANICAL) FRAMING PLAN - PART 2

SEAL & SIGNATURE:
STATE OF NEW YORK · AHMAD RAYHANI · No. 085527 · LICENSED PROFESSIONAL ENGINEER

DATE:	09/24/14
PROJECT No:	1302510
DRAWN: CAD	REV:
CHK: CL	
SCALE:	
DWG No:	**S-272.01**
DOB PAGE No:	of

DOB EMPLOYEE STAMP:
Damian Titus
NYC Buildings
APPROVED
Under Directive 2 of 1975
AMENDED APPLICATION
Date: 10/08/2015
NYC Development Hub

DOB B-SCAN:

FILE NAME:
PLOT DATE:

DEPT OF BLDGS121185539 Job Number
E312986721 Scan Code
30" x 42" Arch E1 - SHEET SIZE

1 S-280 — 28TH FLOOR OVERALL FRAMING PLAN

SCALE: 3/32" = 1'-0"

NOTES:

1. TOP OF SLAB ELEVATION TO BE 318'-4" U.O.N. ON PLAN
2. SLAB TO BE 12" THICK U.O.N. THUS ____ ON PLAN.
3. TOP & BOTTOM REINFORCEMENT TO BE #5@12 CONT. E.W. FOR 12" SLAB U.O.N. ON PLAN. FOR ADDITIONAL REIFORCEMENT SEE PLAN
4. FOR BALANCE OF NOTES SEE DRAWING S-010.
5. FOR STR. INTEGRITY REINF. ADD'L INFORMATION SEE S-965.

28TH FLOOR BEAM SCHEDULE

BEAM MARK	SIZE WIDTH	SIZE DEPTH	REINFORCEMENT BOTTOM CONTINUOUS	REINFORCEMENT TOP CONTINUOUS	REINFORCEMENT TOP ADD'L BARS AT SUPPORT	STIRRUPS TYPE	STIRRUPS SIZE	STIRRUPS SPACING	REMARKS
28B1	12	24	2-#11	2-#11		1	#4	@6	
28B2	12	24	3-#11	2-#11		1	#4	@10	
28B3	12	24	2-#9	2-#9		1	#4	@10	
28B4	8	12	2-#6	2-#6		1	#3	@5	

TYPE 1
STIRRUP TYPES

KEY PLAN:

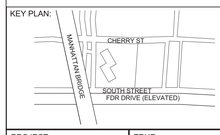

PROJECT NORTH

TRUE NORTH

DEVELOPER:
EXTELL DEVELOPMENT COMPANY
805 Third Ave, 7th Floor
New York, NY 10022
TEL: 212-712-6000 FAX: 212-712-6100

ARCHITECT OF RECORD:
AAI ARCHITECTS, P.C.
14 Wall Street, 2nd Floor
New York, NY 10005
TEL: 212-964-4040 FAX: 212-964-4090

INTERIOR DESIGNER:
MEYER DAVIS
180 Varick St, suite 404
New York, NY 10014
TEL: 212-627-5574

LANDSCAPE DESIGNER:
WEST 8 URBAN DESIGN & LANDSCAPE ARCHITECTURE P.C.
333 Hudson Street, Suite 905
New York, NY 10013
TEL: 212-285-0088 FAX: 212-285-0228

STRUCTURAL ENGINEERS:
WSP
228 East 45th Street
New York, NY 10017
TEL: 212-687-9888 FAX: 646-487-5501

MEP ENGINEERS:
ICOR ASSOCIATES, LLC
485 C Route 1 South, Suite 200
Iseline, NJ 08830
TEL: 908-272-3300 FAX: 908-272-4440

GEOTECHNICAL ENGINEERS:
LANGAN ENGINEERING & ENVIRONMENTAL SERVICES
21 Penn Plaza - 360 West 31st Street, 8th Floor
New York, NY 10001
TEL: 212.479.5400 FAX: 212.479.5444

No.	DESCRIPTION:	DATE:
1	50% SD	02-28-14
2	100%SD	04-25-14
3	50% DD	08-01-14
4	DESIGN DEVELOPMENT	10-07-14
5	CONCRETE BID PACKAGE	03-06-15
6	50% CONSTRUCTION DOCUMENTS	04-08-15
7	ISSUED FOR FILING	07-28-15

Discrepancies must be reported immediately to the Architect before proceeding. Only figured dimensions are to be used. Contractors must check all dimensions on site. This drawing is protected by copyright.

ALL DIMENSIONS ARE SHOWN IN IMPERIAL.

CONSULTANT: WSP

PROJECT:
250 SOUTH STREET
NEW YORK, NY

DRAWING TITLE:
28TH FLOOR OVERALL FRAMING PLAN

SEAL & SIGNATURE:

DATE:	02/28/14
PROJECT No:	1302510
DRAWN: CAD	REV:
CHK: CL	
SCALE:	
DWG No:	S-280.01
DOB PAGE No:	of

DOB EMPLOYEE STAMP:

Damian Titus
Buildings
APPROVED
Under Directive 2 of 1975
AMENDED APPLICATION
Date: 10/08/2015
NYC Development Hub

DOB B-SCAN:

FILE NAME:
PLOT DATE:

DEPT OF BLDGS121185528 Job Number
ES937922418 Scan Code

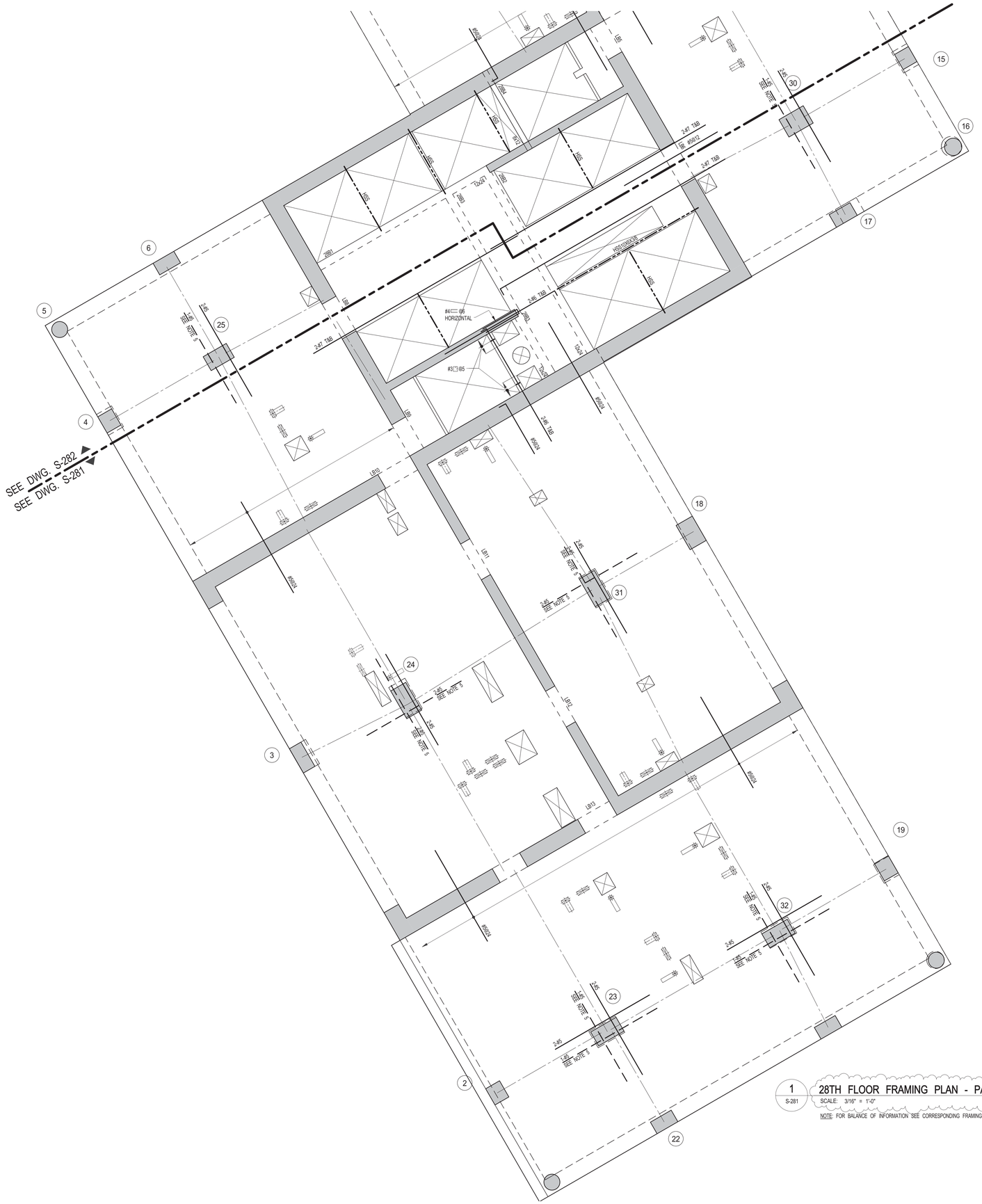

1 S-281 **28TH FLOOR FRAMING PLAN - PART 1**

SCALE: 3/16" = 1'-0"

NOTE: FOR BALANCE OF INFORMATION SEE CORRESPONDING FRAMING PLAN

KEY PLAN:

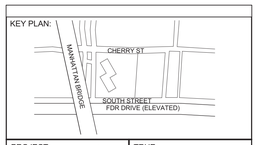

PROJECT NORTH | TRUE NORTH

DEVELOPER:
EXTELL DEVELOPMENT COMPANY
805 Third Ave, 7th Floor
New York, NY 10022
TEL: 212-712-6000 FAX: 212-712-6100

ARCHITECT OF RECORD:
AAI ARCHITECTS, P.C.
14 Wall Street, 2nd Floor
New York, NY 10005
TEL: 212-964-4040 FAX: 212-964-4090

INTERIOR DESIGNER:
MEYER DAVIS
180 Varick St, suite 404
New York, NY 10014
TEL: 212-627-5574

LANDSCAPE DESIGNER:
WEST 8 URBAN DESIGN & LANDSCAPE ARCHITECTURE P.C.
333 Hudson Street, Suite 905
New York, NY 10013
TEL: 212-285-0088 FAX: 212-285-0228

STRUCTURAL ENGINEERS:
WSP
228 East 45th Street
New York, NY 10017
TEL: 212-687-9888 FAX: 646-487-5501

MEP ENGINEERS:
ICOR ASSOCIATES, LLC
485 C Route 1 South, Suite 200
Iseline, NJ 08830
TEL: 908-272-3300 FAX: 908-272-4440

GEOTECHNICAL ENGINEERS:
LANGAN ENGINEERING & ENVIRONMENTAL SERVICES
21 Penn Plaza - 360 West 31st Street, 8th Floor
New York, NY 10001
TEL: 212.479.5400 FAX: 212.479.5444

No.	DESCRIPTION:	DATE:
1	50% DD	08-01-14
2	DESIGN DEVELOPMENT	10-07-14
3	CONCRETE BID PACKAGE	03-06-15
4	50% CONSTRUCTION DOCUMENTS	04-08-15
5	ISSUED FOR FILING	07-28-15

Discrepancies must be reported immediately to the Architect before proceeding. Only figured dimensions are to be used. Contractors must check all dimensions on site. This drawing is protected by copyright.

ALL DIMENSIONS ARE SHOWN IN IMPERIAL.

CONSULTANT:
WSP

PROJECT:
250 SOUTH STREET
NEW YORK, NY

DRAWING TITLE:
28TH FRAMING PLAN - PART 1

SEAL & SIGNATURE:
STATE OF NEW YORK · AHMAD RAHMAN · No. 085537 · LICENSED PROFESSIONAL ENGINEER

DATE:	08/01/14
PROJECT No:	1302510
DRAWN: CAD	REV:
CHK: CL	
SCALE:	
DWG No:	**S-281.01**
DOB PAGE No:	of

DOB EMPLOYEE STAMP:
Damian Titus
NYC Buildings
APPROVED
Under Directive 2 of 1975
AMENDED APPLICATION
Date: 10/08/2015
NYC Development Hub

DOB B-SCAN:

30" x 42" Arch E1 - SHEET SIZE
FILE NAME:
PLOT DATE:

DEPT OF BLDGS121185539 Job Number
ES7852246898 Scan Code
30" x 42" Arch E1 - SHEET SIZE

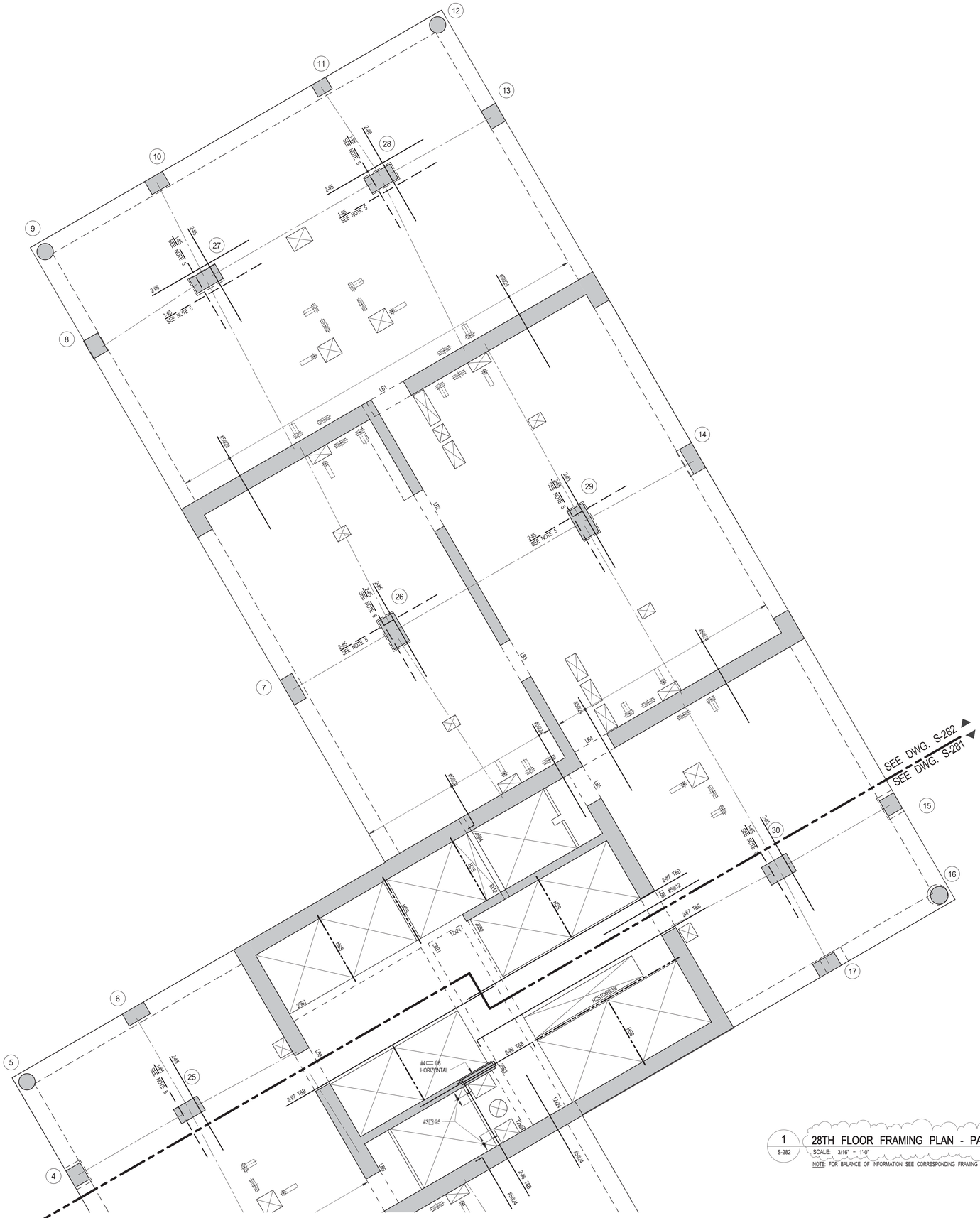

1 S-282 — 28TH FLOOR FRAMING PLAN - PART 2
SCALE: 3/16" = 1'-0"
NOTE: FOR BALANCE OF INFORMATION SEE CORRESPONDING FRAMING PLAN

KEY PLAN:

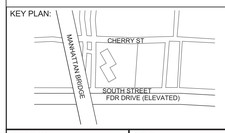

PROJECT NORTH

TRUE NORTH

DEVELOPER:
EXTELL DEVELOPMENT COMPANY
805 Third Ave, 7th Floor
New York, NY 10022
TEL: 212-712-6000 FAX: 212-712-6100

ARCHITECT OF RECORD:
AAI ARCHITECTS, P.C.
14 Wall Street, 2nd Floor
New York, NY 10005
TEL: 212-964-4040 FAX: 212-964-4090

INTERIOR DESIGNER:
MEYER DAVIS
180 Varick St, suite 404
New York, NY 10014
TEL: 212-627-5574

LANDSCAPE DESIGNER:
WEST 8 URBAN DESIGN & LANDSCAPE ARCHITECTURE P.C.
333 Hudson Street, Suite 905
New York, NY 10013
TEL: 212-285-0088 FAX: 212-285-0228

STRUCTURAL ENGINEERS:
WSP
228 East 45th Street
New York, NY 10017
TEL: 212-687-9888 FAX: 646-487-5501

MEP ENGINEERS:
ICOR ASSOCIATES, LLC
485 C Route 1 South, Suite 200
Iseline, NJ 08830
TEL: 908-272-3300 FAX: 908-272-4440

GEOTECHNICAL ENGINEERS:
LANGAN ENGINEERING & ENVIRONMENTAL SERVICES
21 Penn Plaza - 360 West 31st Street, 8th Floor
New York, NY 10001
TEL: 212.479.5400 FAX: 212.479.5444

No.	DESCRIPTION:	DATE:
1	50% DD	08-01-14
2	DESIGN DEVELOPMENT	10-07-14
3	CONCRETE BID PACKAGE	03-06-15
4	50% CONSTRUCTION DOCUMENTS	04-08-15
5	ISSUED FOR FILING	07-28-15

Discrepancies must be reported immediately to the Architect before proceeding. Only figured dimensions are to be used. Contractors must check all dimensions on site. This drawing is protected by copyright.

ALL DIMENSIONS ARE SHOWN IN IMPERIAL.

CONSULTANT: WSP

PROJECT:
250 SOUTH STREET
NEW YORK, NY

DRAWING TITLE:
28TH FRAMING PLAN - PART 2

SEAL & SIGNATURE:

DATE:	08/01/14
PROJECT No:	1302510
DRAWN: CAD	REV:
CHK: CL	
SCALE:	

DWG No: **S-282.01**

DOB PAGE No: of

DOB EMPLOYEE STAMP:

DOB B-SCAN:

FILE NAME:
PLOT DATE:

1 S-290 29TH-48TH TYPICAL FLOOR FRAMING PLAN

SCALE: 3/32" = 1'-0"

NOTES:

1. TOP OF SLAB ELEVATION TO BE ____ U.O.N. ON PLAN
2. SLAB TO BE 9" THICK U.O.N. THUS ☐ ON PLAN.
3. BOTTOM REINFORCEMENT TO BE: #4@12 FOR 9" SLAB
   #4@10 FOR 10" SLAB
4. FOR BALANCE OF NOTES SEE DRAWING S-010.
5. FOR STR. INTEGRITY REINF. ADD'L INFORMATION SEE S-965.

29TH-47TH FLOOR BEAM SCHEDULE

BEAM MARK	SIZE		REINFORCEMENT			STIRRUPS			REMARKS
	WIDTH	DEPTH	BOTTOM CONTINUOUS	TOP CONTINUOUS	TOP ADD'L BARS AT SUPPORT	TYPE	SIZE	SPACING	
29B1	12	24	3-#9	3-#9		1	#4	@6	
29B2	12	24	3-#9	3-#9		1	#4	@10	
29B3	12	24	2-#8	2-#8		1	#4	@10	
29B4	8	12	2-#6	2-#6		1	#3	@5	

KEY PLAN:

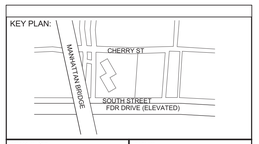

PROJECT NORTH

TRUE NORTH

DEVELOPER:
EXTELL DEVELOPMENT COMPANY
805 Third Ave, 7th Floor
New York, NY 10022
TEL: 212-712-6000 FAX: 212-712-6100

ARCHITECT OF RECORD:
AAI ARCHITECTS, P.C.
14 Wall Street, 2nd Floor
New York, NY 10005
TEL: 212-964-4040 FAX: 212-964-4090

INTERIOR DESIGNER:
MEYER DAVIS
180 Varick St, suite 404
New York, NY 10014
TEL: 212-627-5574

LANDSCAPE DESIGNER:
WEST 8 URBAN DESIGN & LANDSCAPE ARCHITECTURE P.C.
333 Hudson Street, Suite 905
New York, NY 10013
TEL: 212-285-0088 FAX: 212-285-0228

STRUCTURAL ENGINEERS:
WSP
228 East 45th Street
New York, NY 10017
TEL: 212-687-9888 FAX: 646-487-5501

MEP ENGINEERS:
ICOR ASSOCIATES, LLC
485 C Route 1 South, Suite 200
Iseline, NJ 08830
TEL: 908-272-3300 FAX: 908-272-4440

GEOTECHNICAL ENGINEERS:
LANGAN ENGINEERING & ENVIRONMENTAL SERVICES
21 Penn Plaza - 360 West 31st Street, 8th Floor
New York, NY 10001
TEL: 212.479.5400 FAX: 212.479.5444

No.	DESCRIPTION:	DATE:
1	CONCRETE BID PACKAGE	03-06-15
2	50% CONSTRUCTION DOCUMENTS	04-08-15
3	ISSUED FOR FILING	07-28-15

Discrepancies must be reported immediately to the Architect before proceeding. Only figured dimensions are to be used. Contractors must check all dimensions on site. This drawing is protected by copyright.

ALL DIMENSIONS ARE SHOWN IN IMPERIAL.

CONSULTANT:
WSP

PROJECT:
250 SOUTH STREET
NEW YORK, NY

DRAWING TITLE:
29TH-48TH FLOOR OVERALL FRAMING PLAN

SEAL & SIGNATURE:
STATE OF NEW YORK
AHMAD RAHIMIAN
No. 065537
LICENSED PROFESSIONAL ENGINEER

DATE:	03/03/15
PROJECT No:	1302510
DRAWN: CAD	REV:
CHK: CL	
SCALE: As indicated	
DWG No:	S-290.01
DOB PAGE No:	of

DOB EMPLOYEE STAMP:
Damian Titus
NYC Buildings
APPROVED
Under Directive 2 of 1975
AMENDED APPLICATION
Date: 10/08/2015
NYC Development Hub

DOB B-SCAN:

30" x 42" Arch E1 - SHEET SIZE

FILE NAME:
PLOT DATE:

1 S-291 29TH-48TH FLOOR FRAMING PLAN - PART 1

SCALE: 3/16" = 1'-0"

NOTES:

1. FOR BALANCE OF INFORMATION SEE CORRESPONDING OVERALL FRAMING PLAN.

KEY PLAN:

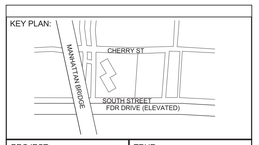

PROJECT NORTH

TRUE NORTH

DEVELOPER:
EXTELL DEVELOPMENT COMPANY
805 Third Ave, 7th Floor
New York, NY 10022
TEL: 212-712-6000 FAX: 212-712-6100

ARCHITECT OF RECORD:
AAI ARCHITECTS, P.C.
14 Wall Street, 2nd Floor
New York, NY 10005
TEL: 212-964-4040 FAX: 212-964-4090

INTERIOR DESIGNER:
MEYER DAVIS
180 Varick St, suite 404
New York, NY 10014
TEL: 212-627-5574

LANDSCAPE DESIGNER:
WEST 8 URBAN DESIGN & LANDSCAPE ARCHITECTURE P.C.
333 Hudson Street, Suite 905
New York, NY 10013
TEL: 212-285-0088 FAX: 212-285-0228

STRUCTURAL ENGINEERS:
WSP
228 East 45th Street
New York, NY 10017
TEL: 212-687-9888 FAX: 646-487-5501

MEP ENGINEERS:
ICOR ASSOCIATES, LLC
485 C Route 1 South, Suite 200
Iseline, NJ 08830
TEL: 908-272-3300 FAX: 908-272-4440

GEOTECHNICAL ENGINEERS:
LANGAN ENGINEERING & ENVIRONMENTAL SERVICES
21 Penn Plaza - 360 West 31st Street, 8th Floor
New York, NY 10001
TEL: 212.479.5400 FAX: 212.479.5444

No.	DESCRIPTION:	DATE:
1	CONCRETE BID PACKAGE	03-06-15
2	50% CONSTRUCTION DOCUMENTS	04-08-15
3	ISSUED FOR FILING	07-28-15

Discrepancies must be reported immediately to the Architect before proceeding. Only figured dimensions are to be used. Contractors must check all dimensions on site. This drawing is protected by copyright.

ALL DIMENSIONS ARE SHOWN IN IMPERIAL.

CONSULTANT:
WSP

PROJECT:
250 SOUTH STREET
NEW YORK, NY

DRAWING TITLE:
29TH-48TH FRAMING PLAN - PART 1

SEAL & SIGNATURE:
STATE OF NEW YORK
AHMAD RAHIMIAN
No. 065537
LICENSED PROFESSIONAL ENGINEER

DATE:	03/03/15
PROJECT No:	1302510
DRAWN: CAD	REV:
CHK: CL	
SCALE: As indicated	
DWG No:	S-291.01
DOB PAGE No:	of

DOB EMPLOYEE STAMP:
Damian Titus
NYC Buildings
APPROVED
Under Directive 2 of 1975
AMENDED APPLICATION
Date: 10/08/2015
NYC Development Hub

DOB B-SCAN:

30" x 42" Arch E1 - SHEET SIZE

FILE NAME:
PLOT DATE:

DEPT OF BLDGS 121185528 Job Number
ES654289418 Scan Code

30" x 42" Arch E1 - SHEET SIZE

1 S-292 29TH-48TH FLOOR FRAMING PLAN - PART 2
SCALE: 3/16" = 1'-0"

NOTES:

1. FOR BALANCE OF INFORMATION SEE CORRESPONDING OVERALL FRAMING PLAN.

KEY PLAN:

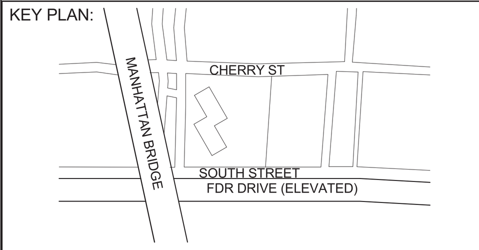

PROJECT NORTH | TRUE NORTH

DEVELOPER:
EXTELL DEVELOPMENT COMPANY
805 Third Ave, 7th Floor
New York, NY 10022
TEL: 212-712-6000 FAX: 212-712-6100

ARCHITECT OF RECORD:
AAI ARCHITECTS, P.C.
14 Wall Street, 2nd Floor
New York, NY 10005
TEL: 212-964-4040 FAX: 212-964-4090

INTERIOR DESIGNER:
MEYER DAVIS
180 Varick St, suite 404
New York, NY 10014
TEL: 212-627-5574

LANDSCAPE DESIGNER:
WEST 8 URBAN DESIGN & LANDSCAPE ARCHITECTURE P.C.
333 Hudson Street, Suite 905
New York, NY 10013
TEL: 212-285-0088 FAX: 212-285-0228

STRUCTURAL ENGINEERS:
WSP
228 East 45th Street
New York, NY 10017
TEL: 212-687-9888 FAX: 646-487-5501

MEP ENGINEERS:
ICOR ASSOCIATES, LLC
485 C Route 1 South, Suite 200
Iseline, NJ 08830
TEL: 908-272-3300 FAX: 908-272-4440

GEOTECHNICAL ENGINEERS:
LANGAN ENGINEERING & ENVIRONMENTAL SERVICES
21 Penn Plaza - 360 West 31st Street, 8th Floor
New York, NY 10001
TEL: 212.479.5400 FAX: 212.479.5444

No.	DESCRIPTION:	DATE:
1	CONCRETE BID PACKAGE	03-06-15
2	50% CONSTRUCTION DOCUMENTS	04-08-15
3	ISSUED FOR FILING	07-28-15

Discrepancies must be reported immediately to the Architect before proceeding. Only figured dimensions are to be used. Contractors must check all dimensions on site. This drawing is protected by copyright.

ALL DIMENSIONS ARE SHOWN IN IMPERIAL.

CONSULTANT:
WSP

PROJECT:
250 SOUTH STREET
NEW YORK, NY

DRAWING TITLE:
29TH-48TH FRAMING PLAN - PART 2

SEAL & SIGNATURE:
STATE OF NEW YORK · AHMAD RAHIMIAN · No. 065597 · LICENSED PROFESSIONAL ENGINEER

DATE:	03/03/15
PROJECT No:	1302510
DRAWN:	CAD
CHK:	CL
SCALE:	As indicated
DWG No:	S-292.01
DOB PAGE No:	of

REV:

DOB EMPLOYEE STAMP:
Damian Titus
NYC Buildings
APPROVED
Under Directive 2 of 1975
AMENDED APPLICATION
Date: 10/08/2015
NYC Development Hub

DOB B-SCAN:

FILE NAME:
PLOT DATE:

DEPT OF BLDGS121180539 Job Number
E364511166805 Scan Code
30" x 42" Arch E1 - SHEET SIZE

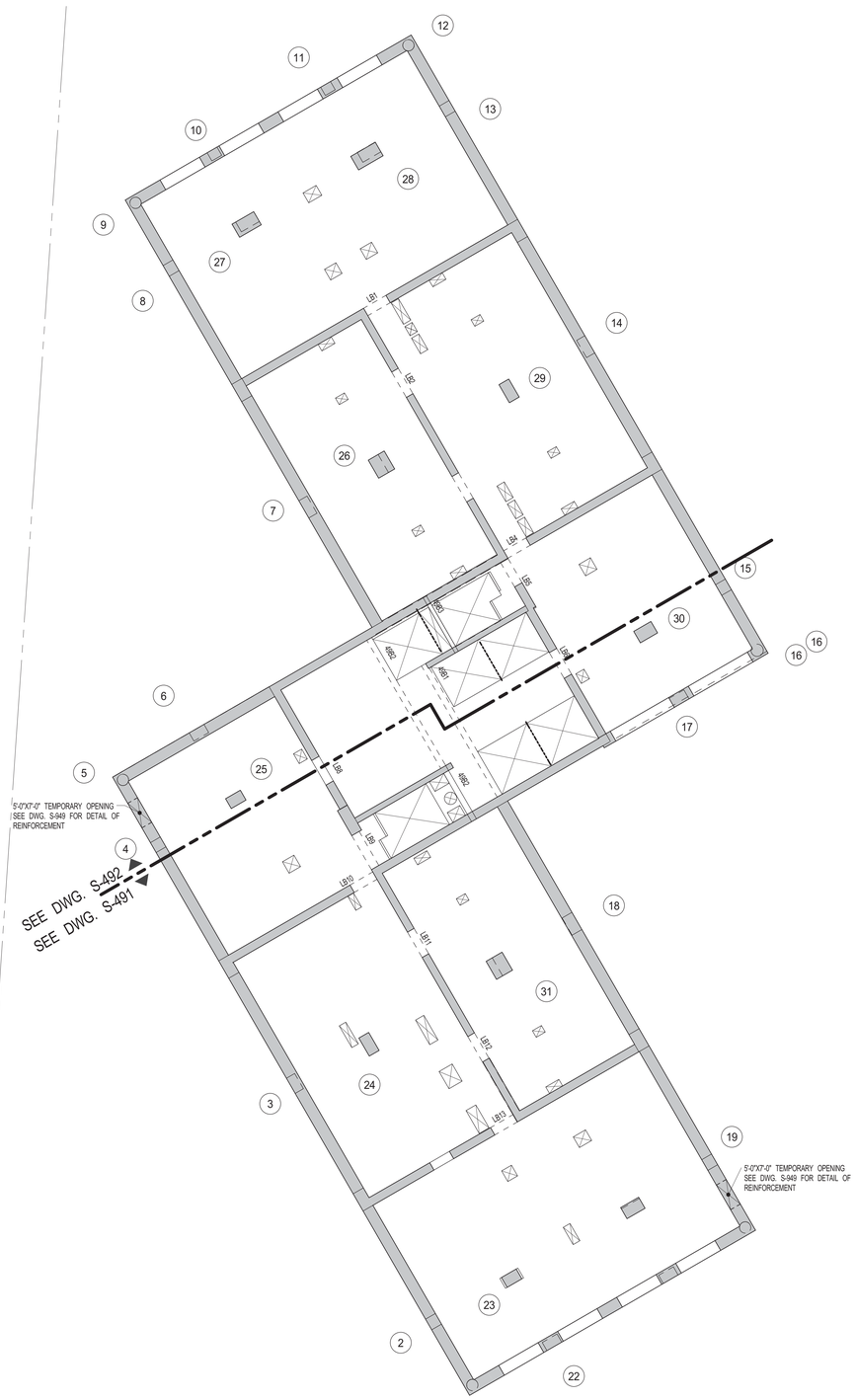

1 S-490 — 49TH FLOOR (MECHANICAL) FRAMING PLAN

SCALE: 3/32" = 1'-0"

NOTES:

1. TOP OF SLAB ELEVATION TO BE 533'-8" U.O.N. ON PLAN
2. SLAB TO BE 12" THICK U.O.N. THUS ▭ ON PLAN.
3. TOP & BOTTOM REINFORCEMENT TO BE #5@12 CONT. E.W. FOR 12" SLAB U.O.N. ON PLAN. FOR ADDITIONAL REIFORCEMENT SEE PLAN
4. FOR BALANCE OF NOTES SEE DRAWING S-010.
5. FOR STR. INTEGRITY REINF. ADD'L INFORMATION SEE S-965.

49TH FLOOR BEAM SCHEDULE

BEAM MARK	SIZE WIDTH	SIZE DEPTH	REINFORCEMENT BOTTOM CONTINUOUS	REINFORCEMENT TOP CONTINUOUS	STIRRUPS TYPE	STIRRUPS SIZE	STIRRUPS SPACING	REMARKS
49B1	12	24	3-#11	2-#11	1	#4	@10	
49B2	12	24	3-#11	3-#11	1	#4	@6	
49B3	8	12	2-#6	2-#6	1	#3	@5	

TYPE 1

STIRRUP TYPES

KEY PLAN:

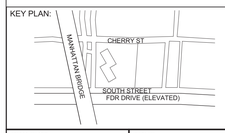

PROJECT NORTH

TRUE NORTH

DEVELOPER:
EXTELL DEVELOPMENT COMPANY
805 Third Ave, 7th Floor
New York, NY 10022
TEL: 212-712-6000 FAX: 212-712-6100

ARCHITECT OF RECORD:
AAI ARCHITECTS, P.C.
14 Wall Street, 2nd Floor
New York, NY 10005
TEL: 212-964-4040 FAX: 212-964-4090

INTERIOR DESIGNER:
MEYER DAVIS
180 Varick St, suite 404
New York, NY 10014
TEL: 212-627-5574

LANDSCAPE DESIGNER:
WEST 8 URBAN DESIGN & LANDSCAPE ARCHITECTURE P.C.
333 Hudson Street, Suite 905
New York, NY 10013
TEL: 212-285-0088 FAX: 212-285-0228

STRUCTURAL ENGINEERS:
WSP
228 East 45th Street
New York, NY 10017
TEL: 212-687-9888 FAX: 646-487-5501

MEP ENGINEERS:
ICOR ASSOCIATES, LLC
485 C Route 1 South, Suite 200
Iseline, NJ 08830
TEL: 908-272-3300 FAX: 908-272-4440

GEOTECHNICAL ENGINEERS:
LANGAN ENGINEERING & ENVIRONMENTAL SERVICES
21 Penn Plaza - 360 West 31st Street, 8th Floor
New York, NY 10001
TEL: 212.479.5400 FAX: 212.479.5444

No.	DESCRIPTION:	DATE:
1	50% SD	02-28-14
2	100%SD	04-25-14
3	50% DD	08-01-14
4	DESIGN DEVELOPMENT	10-07-14
5	CONCRETE BID PACKAGE	03-06-15
6	50% CONSTRUCTION DOCUMENTS	04-08-15
7	ISSUED FOR FILING	07-28-15

Discrepancies must be reported immediately to the Architect before proceeding. Only figured dimensions are to be used. Contractors must check all dimensions on site. This drawing is protected by copyright.

ALL DIMENSIONS ARE SHOWN IN IMPERIAL.

CONSULTANT:
WSP

PROJECT:
250 SOUTH STREET
NEW YORK, NY

DRAWING TITLE:
49TH FLOOR (MECHANICAL)
OVERALL FRAMING PLAN

SEAL & SIGNATURE:

DATE:	02/28/14
PROJECT No:	1302510
DRAWN: CAD	REV:
CHK: CL	
SCALE:	
DWG No:	**S-490.01**
DOB PAGE No:	of

DOB EMPLOYEE STAMP:

DOB B-SCAN:

FILE NAME:
PLOT DATE:

DEPT OF BLDGS 121185528 Job Number
ES132381284 Scan Code

1 S-491 49TH FLOOR (MECHANICAL) FRAMING PLAN - PART 1
SCALE: 3/16" = 1'-0"

NOTES:
1. FOR BALANCE OF INFORMATION SEE CORRESPONDING OVERALL FRAMING PLAN.

KEY PLAN:

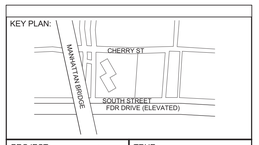

PROJECT NORTH | TRUE NORTH

DEVELOPER:
EXTELL DEVELOPMENT COMPANY
805 Third Ave, 7th Floor
New York, NY 10022
TEL: 212-712-6000 FAX: 212-712-6100

ARCHITECT OF RECORD:
AAI ARCHITECTS, P.C.
14 Wall Street, 2nd Floor
New York, NY 10005
TEL: 212-964-4040 FAX: 212-964-4090

INTERIOR DESIGNER:
MEYER DAVIS
180 Varick St, suite 404
New York, NY 10014
TEL: 212-627-5574

LANDSCAPE DESIGNER:
WEST 8 URBAN DESIGN & LANDSCAPE ARCHITECTURE P.C.
333 Hudson Street, Suite 905
New York, NY 10013
TEL: 212-285-0088 FAX: 212-285-0228

STRUCTURAL ENGINEERS:
WSP
228 East 45th Street
New York, NY 10017
TEL: 212-687-9888 FAX: 646-487-5501

MEP ENGINEERS:
ICOR ASSOCIATES, LLC
485 C Route 1 South, Suite 200
Iseline, NJ 08830
TEL: 908-272-3300 FAX: 908-272-4440

GEOTECHNICAL ENGINEERS:
LANGAN ENGINEERING & ENVIRONMENTAL SERVICES
21 Penn Plaza - 360 West 31st Street, 8th Floor
New York, NY 10001
TEL: 212.479.5400 FAX: 212.479.5444

No.	DESCRIPTION:	DATE:
1	DESIGN DEVELOPMENT	10-07-14
2	CONCRETE BID PACKAGE	03-06-15
3	50% CONSTRUCTION DOCUMENTS	04-08-15
4	ISSUED FOR FILING	07-28-15

Discrepancies must be reported immediately to the Architect before proceeding. Only figured dimensions are to be used. Contractors must check all dimensions on site. This drawing is protected by copyright.

ALL DIMENSIONS ARE SHOWN IN IMPERIAL.

CONSULTANT:
WSP

PROJECT:
250 SOUTH STREET
NEW YORK, NY

DRAWING TITLE:
49TH FLOOR (MECHANICAL) FRAMING PLAN - PART 1

SEAL & SIGNATURE:
STATE OF NEW YORK · AHMAD RAHIMIAN · No. 065537 · LICENSED PROFESSIONAL ENGINEER

DATE:	09/26/14
PROJECT No:	1302510
DRAWN: CAD	REV:
CHK: CL	
SCALE:	
DWG No:	S-491.01
DOB PAGE No:	of

DOB EMPLOYEE STAMP:
Damian Titus
Buildings
APPROVED
Under Directive 2 of 1975
AMENDED APPLICATION
Date: 10/08/2015
NYC Development Hub

DOB B-SCAN:

30" x 42" Arch E1 - SHEET SIZE

FILE NAME:
PLOT DATE:

DEPT OF BLDGS 121185528 Job Number
ES945367358 Scan Code

1 S-492 49TH FLOOR (MECHANICAL) FRAMING PLAN - PART 2

SCALE: 3/16" = 1'-0"

NOTES:

1. FOR BALANCE OF INFORMATION SEE CORRESPONDING OVERALL FRAMING PLAN.

KEY PLAN:

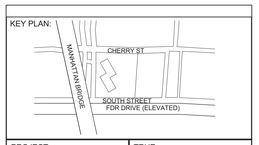

PROJECT NORTH

TRUE NORTH

DEVELOPER:
EXTELL DEVELOPMENT COMPANY
805 Third Ave, 7th Floor
New York, NY 10022
TEL: 212-712-6000 FAX: 212-712-6100

ARCHITECT OF RECORD:
AAI ARCHITECTS, P.C.
14 Wall Street, 2nd Floor
New York, NY 10005
TEL: 212-964-4040 FAX: 212-964-4090

INTERIOR DESIGNER:
MEYER DAVIS
180 Varick St, suite 404
New York, NY 10014
TEL: 212-627-5574

LANDSCAPE DESIGNER:
WEST 8 URBAN DESIGN & LANDSCAPE ARCHITECTURE P.C.
333 Hudson Street, Suite 905
New York, NY 10013
TEL: 212-285-0088 FAX: 212-285-0228

STRUCTURAL ENGINEERS:
WSP
228 East 45th Street
New York, NY 10017
TEL: 212-687-9888 FAX: 646-487-5501

MEP ENGINEERS:
ICOR ASSOCIATES, LLC
485 C Route 1 South, Suite 200
Iseline, NJ 08830
TEL: 908-272-3300 FAX: 908-272-4440

GEOTECHNICAL ENGINEERS:
LANGAN ENGINEERING & ENVIRONMENTAL SERVICES
21 Penn Plaza - 360 West 31st Street, 8th Floor
New York, NY 10001
TEL: 212.479.5400 FAX: 212.479.5444

No.	DESCRIPTION:	DATE:
1	DESIGN DEVELOPMENT	10-07-14
2	CONCRETE BID PACKAGE	03-06-15
3	50% CONSTRUCTION DOCUMENTS	04-08-15
4	ISSUED FOR FILING	07-28-15

Discrepancies must be reported immediately to the Architect before proceeding. Only figured dimensions are to be used. Contractors must check all dimensions on site. This drawing is protected by copyright.

ALL DIMENSIONS ARE SHOWN IN IMPERIAL.

CONSULTANT:
WSP

PROJECT:
250 SOUTH STREET
NEW YORK, NY

DRAWING TITLE:
49TH FLOOR (MECHANICAL) FRAMING PLAN - PART 2

SEAL & SIGNATURE:
STATE OF NEW YORK
AHMAD RAHIMIAN
No. 085537
LICENSED PROFESSIONAL ENGINEER

DATE:	09/26/14
PROJECT No:	1302510
DRAWN: CAD	REV:
CHK: CL	
SCALE:	
DWG No:	S-492.01
DOB PAGE No:	of

DOB EMPLOYEE STAMP:
Damian Titus
Buildings
APPROVED
Under Directive 2 of 1975
AMENDED APPLICATION
Date: 10/08/2015
NYC Development Hub

DOB B-SCAN:

30" x 42" Arch E1 - SHEET SIZE

FILE NAME:
PLOT DATE:

1 S-500 **50TH FLOOR OVERALL FRAMING PLAN**

SCALE: 3/32" = 1'-0"

NOTES:

1. TOP OF SLAB ELEVATION TO BE 550'-10" U.O.N. ON PLAN
2. SLAB TO BE 12" THICK U.O.N. THUS [ ] ON PLAN.
3. TOP & BOTTOM REINFORCEMENT TO BE #5@12 CONT. E.W. FOR 12" SLAB U.O.N. ON PLAN. FOR ADDITIONAL REIFORCEMENT SEE PLAN
4. FOR BALANCE OF NOTES SEE DRAWING S-010.
5. FOR STR. INTEGRITY REINF. ADD'L INFORMATION SEE S-965.

50TH FLOOR BEAM SCHEDULE

BEAM MARK	SIZE		REINFORCEMENT		STIRRUPS			REMARKS
	WIDTH	DEPTH	BOTTOM CONTINUOUS	TOP CONTINUOUS	TYPE	SIZE	SPACING	
50B1	12	24	3-#11	2-#11	1	#4	@10	
50B2	12	24	3-#11	3-#11	1	#4	@6	
50B3	8	12	2-#6	2-#6	1	#3	@5	

KEY PLAN:

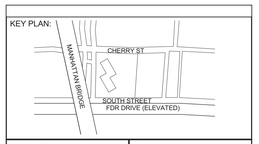

PROJECT NORTH

TRUE NORTH

DEVELOPER:
EXTELL DEVELOPMENT COMPANY
805 Third Ave, 7th Floor
New York, NY 10022
TEL: 212-712-6000 FAX: 212-712-6100

ARCHITECT OF RECORD:
AAI ARCHITECTS, P.C.
14 Wall Street, 2nd Floor
New York, NY 10005
TEL: 212-964-4040 FAX: 212-964-4090

INTERIOR DESIGNER:
MEYER DAVIS
180 Varick St, suite 404
New York, NY 10014
TEL: 212-627-5574

LANDSCAPE DESIGNER:
WEST 8 URBAN DESIGN & LANDSCAPE ARCHITECTURE P.C.
333 Hudson Street, Suite 905
New York, NY 10013
TEL: 212-285-0088 FAX: 212-285-0228

STRUCTURAL ENGINEERS:
WSP
228 East 45th Street
New York, NY 10017
TEL: 212-687-9888 FAX: 646-487-5501

MEP ENGINEERS:
ICOR ASSOCIATES, LLC
485 C Route 1 South, Suite 200
Iseline, NJ 08830
TEL: 908-272-3300 FAX: 908-272-4440

GEOTECHNICAL ENGINEERS:
LANGAN ENGINEERING & ENVIRONMENTAL SERVICES
21 Penn Plaza - 360 West 31st Street, 8th Floor
New York, NY 10001
TEL: 212.479.5400 FAX: 212.479.5444

No.	DESCRIPTION:	DATE:
1	50% SD	02-28-14
2	100%SD	04-25-14
3	50% DD	08-01-14
4	DESIGN DEVELOPMENT	10-07-14
5	CONCRETE BID PACKAGE	03-06-15
6	50% CONSTRUCTION DOCUMENTS	04-08-15
7	ISSUED FOR FILING	07-28-15

Discrepancies must be reported immediately to the Architect before proceeding. Only figured dimensions are to be used. Contractors must check all dimensions on site. This drawing is protected by copyright.

ALL DIMENSIONS ARE SHOWN IN IMPERIAL.

CONSULTANT:
WSP

PROJECT:
250 SOUTH STREET
NEW YORK, NY

DRAWING TITLE:
50TH FLOOR OVERALL FRAMING PLAN

SEAL & SIGNATURE:

DATE:	02/28/14
PROJECT No:	1302510
DRAWN: CAD	REV:
CHK: CL	
SCALE:	
DWG No:	**S-500.01**
DOB PAGE No:	of

DOB EMPLOYEE STAMP:

DOB B-SCAN:

30" x 42" Arch E1 - SHEET SIZE

FILE NAME:
PLOT DATE:

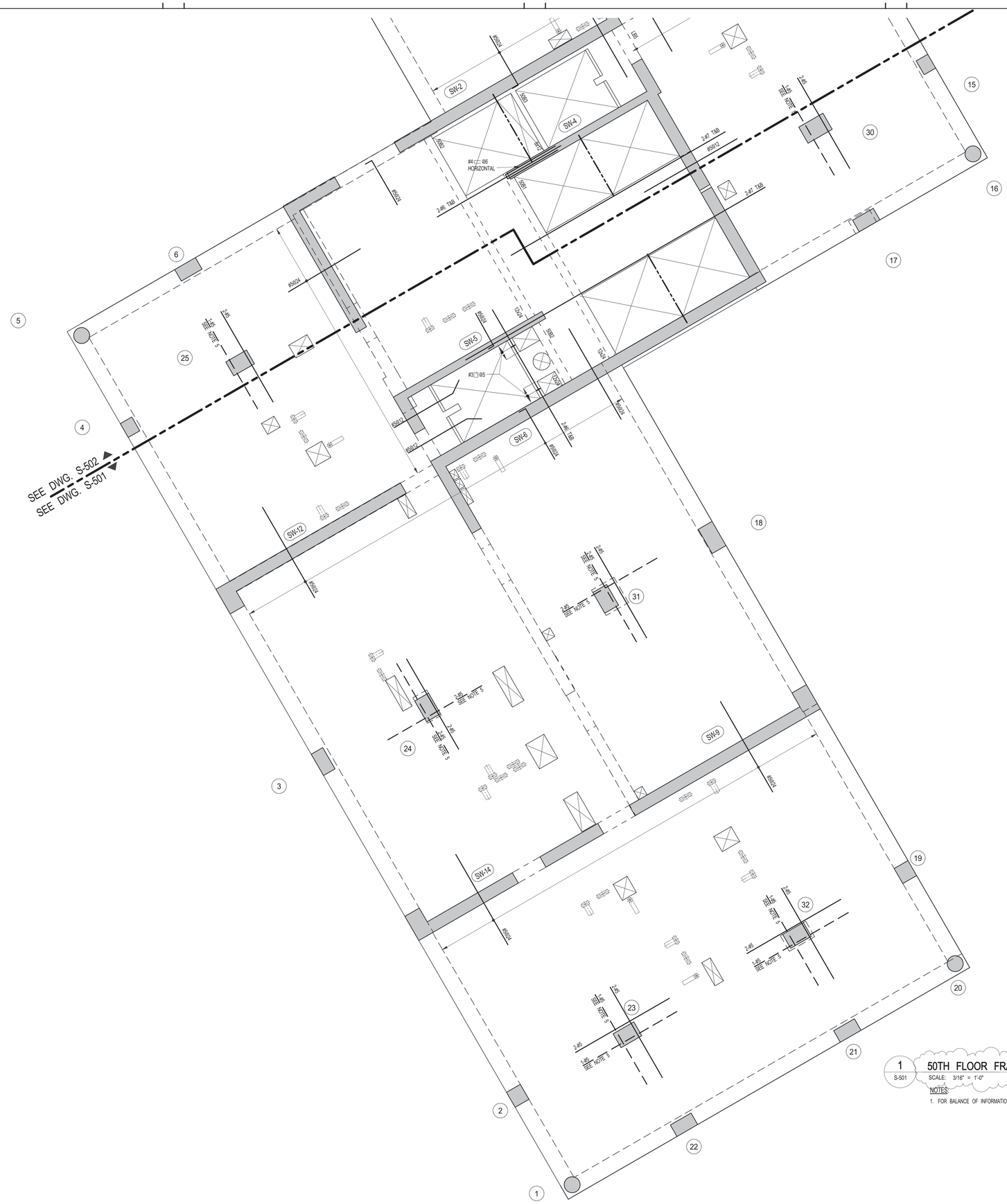

1 S-501 50TH FLOOR FRAMING PLAN - PART 1

SCALE: 3/16" = 1'-0"

NOTES:

1. FOR BALANCE OF INFORMATION SEE CORRESPONDING OVERALL FRAMING PLAN.

KEY PLAN:

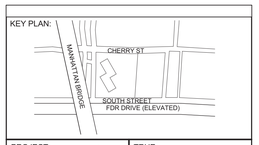

PROJECT NORTH

TRUE NORTH

DEVELOPER:
EXTELL DEVELOPMENT COMPANY
805 Third Ave, 7th Floor
New York, NY 10022
TEL: 212-712-6000 FAX: 212-712-6100

ARCHITECT OF RECORD:
AAI ARCHITECTS, P.C.
14 Wall Street, 2nd Floor
New York, NY 10005
TEL: 212-964-4040 FAX: 212-964-4090

INTERIOR DESIGNER:
MEYER DAVIS
180 Varick St, suite 404
New York, NY 10014
TEL: 212-627-5574

LANDSCAPE DESIGNER:
WEST 8 URBAN DESIGN & LANDSCAPE ARCHITECTURE P.C.
333 Hudson Street, Suite 905
New York, NY 10013
TEL: 212-285-0088 FAX: 212-285-0228

STRUCTURAL ENGINEERS:
WSP
228 East 45th Street
New York, NY 10017
TEL: 212-687-9888 FAX: 646-487-5501

MEP ENGINEERS:
ICOR ASSOCIATES, LLC
485 C Route 1 South, Suite 200
Iseline, NJ 08830
TEL: 908-272-3300 FAX: 908-272-4440

GEOTECHNICAL ENGINEERS:
LANGAN ENGINEERING & ENVIRONMENTAL SERVICES
21 Penn Plaza - 360 West 31st Street, 8th Floor
New York, NY 10001
TEL: 212.479.5400 FAX: 212.479.5444

No.	DESCRIPTION:	DATE:
1	DESIGN DEVELOPMENT	10-07-14
2	CONCRETE BID PACKAGE	03-06-15
3	50% CONSTRUCTION DOCUMENTS	04-08-15
4	ISSUED FOR FILING	07-28-15

Discrepancies must be reported immediately to the Architect before proceeding. Only figured dimensions are to be used. Contractors must check all dimensions on site. This drawing is protected by copyright.

ALL DIMENSIONS ARE SHOWN IN IMPERIAL.

CONSULTANT:
WSP

PROJECT:
250 SOUTH STREET
NEW YORK, NY

DRAWING TITLE:
50TH FLOOR FRAMING PLAN - PART 1

SEAL & SIGNATURE:
STATE OF NEW YORK
AHMAD RAHIMIAN
No. 065537
LICENSED PROFESSIONAL ENGINEER

DATE:	09/26/14
PROJECT No:	1302510
DRAWN: CAD	REV:
CHK: CL	
SCALE:	
DWG No:	S-501.01
DOB PAGE No:	of

DOB EMPLOYEE STAMP:
Damian Titus
Buildings
APPROVED
Under Directive 2 of 1975
AMENDED APPLICATION
Date: 10/08/2015
NYC Development Hub

DOB B-SCAN:

DEPT OF BLDGS121185528 Job Number
ES421144604 Scan Code

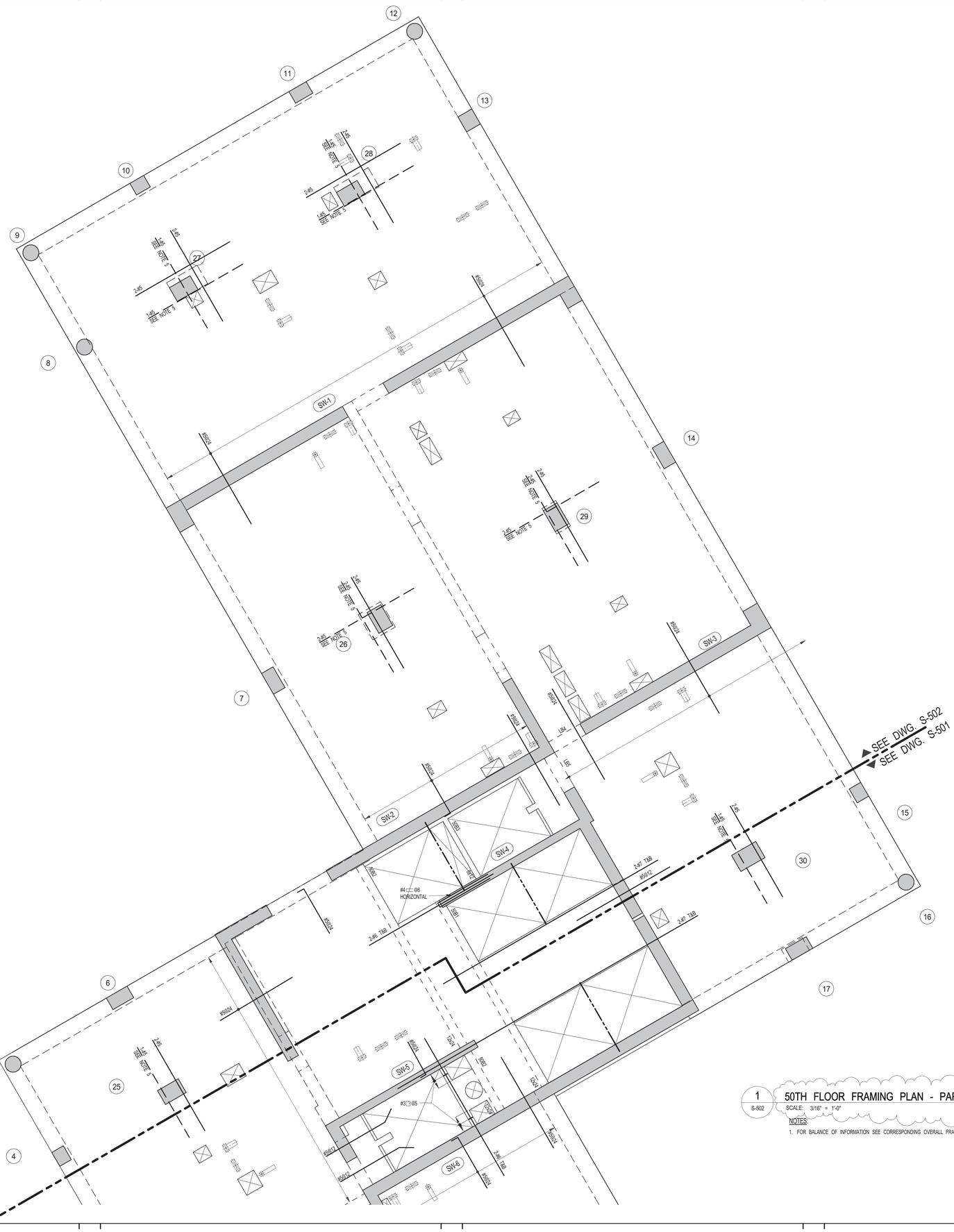

1 S-502 50TH FLOOR FRAMING PLAN - PART 2
SCALE: 3/16" = 1'-0"

NOTES:
1. FOR BALANCE OF INFORMATION SEE CORRESPONDING OVERALL FRAMING PLAN.

KEY PLAN:

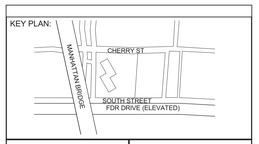

PROJECT NORTH
TRUE NORTH

DEVELOPER:
EXTELL DEVELOPMENT COMPANY
805 Third Ave, 7th Floor
New York, NY 10022
TEL: 212-712-6000 FAX: 212-712-6100

ARCHITECT OF RECORD:
AAI ARCHITECTS, P.C.
14 Wall Street, 2nd Floor
New York, NY 10005
TEL: 212-964-4040 FAX: 212-964-4090

INTERIOR DESIGNER:
MEYER DAVIS
180 Varick St, suite 404
New York, NY 10014
TEL: 212-627-5574

LANDSCAPE DESIGNER:
WEST 8 URBAN DESIGN & LANDSCAPE ARCHITECTURE P.C.
333 Hudson Street, Suite 905
New York, NY 10013
TEL: 212-285-0088 FAX: 212-285-0228

STRUCTURAL ENGINEERS:
WSP
228 East 45th Street
New York, NY 10017
TEL: 212-687-9888 FAX: 646-487-5501

MEP ENGINEERS:
ICOR ASSOCIATES, LLC
485 C Route 1 South, Suite 200
Iseline, NJ 08830
TEL: 908-272-3300 FAX: 908-272-4440

GEOTECHNICAL ENGINEERS:
LANGAN ENGINEERING & ENVIRONMENTAL SERVICES
21 Penn Plaza - 360 West 31st Street, 8th Floor
New York, NY 10001
TEL: 212.479.5400 FAX: 212.479.5444

No.	DESCRIPTION:	DATE:
1	DESIGN DEVELOPMENT	10-07-14
2	CONCRETE BID PACKAGE	03-06-15
3	50% CONSTRUCTION DOCUMENTS	04-08-15
4	ISSUED FOR FILING	07-28-15

Discrepancies must be reported immediately to the Architect before proceeding. Only figured dimensions are to be used. Contractors must check all dimensions on site. This drawing is protected by copyright.

ALL DIMENSIONS ARE SHOWN IN IMPERIAL.

CONSULTANT:
WSP

PROJECT:
250 SOUTH STREET
NEW YORK, NY

DRAWING TITLE:
50TH FLOOR FRAMING PLAN - PART 2

SEAL & SIGNATURE:
STATE OF NEW YORK · AMMAD RAHIMIAN · No. 085537 · LICENSED PROFESSIONAL ENGINEER

DATE:	09/26/14
PROJECT No:	1302510
DRAWN: CAD	REV:
CHK: CL	
SCALE:	
DWG No:	**S-502.01**
DOB PAGE No:	of

DOB EMPLOYEE STAMP:
Damian Titus
BuildTips
APPROVED
Under Directive 2 of 1975
AMENDED APPLICATION
Date: 10/08/2015
NYC Development Hub

DOB B-SCAN:

30" x 42" Arch E1 - SHEET SIZE
FILE NAME:
PLOT DATE:

1 S-510 51ST-59TH OVERALL FRAMING PLAN

SCALE: 3/32" = 1'-0"

NOTES:

1. TOP OF SLAB ELEVATION TO BE ____ U.O.N. ON PLAN
2. SLAB TO BE 9" THICK U.O.N. THUS ☐ ON PLAN.
3. BOTTOM REINFORCEMENT TO BE: #4@12 FOR 9" SLAB
   #4@10 FOR 10" SLAB
4. FOR BALANCE OF NOTES SEE DRAWING S-010.
5. FOR STR. INTEGRITY REINF. ADD'L INFORMATION SEE S-965.

KEY PLAN:

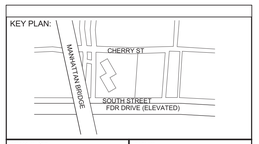

PROJECT NORTH

TRUE NORTH

DEVELOPER:
EXTELL DEVELOPMENT COMPANY
805 Third Ave, 7th Floor
New York, NY 10022
TEL: 212-712-6000 FAX: 212-712-6100

ARCHITECT OF RECORD:
AAI ARCHITECTS, P.C.
14 Wall Street, 2nd Floor
New York, NY 10005
TEL: 212-964-4040 FAX: 212-964-4090

INTERIOR DESIGNER:
MEYER DAVIS
180 Varick St, suite 404
New York, NY 10014
TEL: 212-627-5574

LANDSCAPE DESIGNER:
WEST 8 URBAN DESIGN & LANDSCAPE ARCHITECTURE P.C.
333 Hudson Street, Suite 905
New York, NY 10013
TEL: 212-285-0088 FAX: 212-285-0228

STRUCTURAL ENGINEERS:
WSP
228 East 45th Street
New York, NY 10017
TEL: 212-687-9888 FAX: 646-487-5501

MEP ENGINEERS:
ICOR ASSOCIATES, LLC
485 C Route 1 South, Suite 200
Iseline, NJ 08830
TEL: 908-272-3300 FAX: 908-272-4440

GEOTECHNICAL ENGINEERS:
LANGAN ENGINEERING & ENVIRONMENTAL SERVICES
21 Penn Plaza - 360 West 31st Street, 8th Floor
New York, NY 10001
TEL: 212.479.5400 FAX: 212.479.5444

No.	DESCRIPTION:	DATE:
1	CONCRETE BID PACKAGE	03-06-15
2	50% CONSTRUCTION DOCUMENTS	04-08-15
3	ISSUED FOR FILING	07-28-15

Discrepancies must be reported immediately to the Architect before proceeding. Only figured dimensions are to be used. Contractors must check all dimensions on site. This drawing is protected by copyright.

ALL DIMENSIONS ARE SHOWN IN IMPERIAL.

CONSULTANT:
WSP

PROJECT:
250 SOUTH STREET
NEW YORK, NY

DRAWING TITLE:
51ST-59TH FLOOR OVERALL FRAMING PLAN

SEAL & SIGNATURE:

STATE OF NEW YORK
AHMAD RAHIMIAN
No. 065537
LICENSED PROFESSIONAL ENGINEER

DATE:	03/03/15
PROJECT No:	1302510
DRAWN: CAD	REV:
CHK: CL	
SCALE: As indicated	
DWG No:	S-510.01
DOB PAGE No:	of

DOB EMPLOYEE STAMP:

Damian Titus
Buildings
APPROVED
Under Directive 2 of 1975
AMENDED APPLICATION
Date: 10/08/2015
NYC Development Hub

DOB B-SCAN:

DEPT OF BLDGS 121185528 Job Number
ES117844856 Scan Code
30" x 42" Arch E1 - SHEET SIZE
FILE NAME:
PLOT DATE:

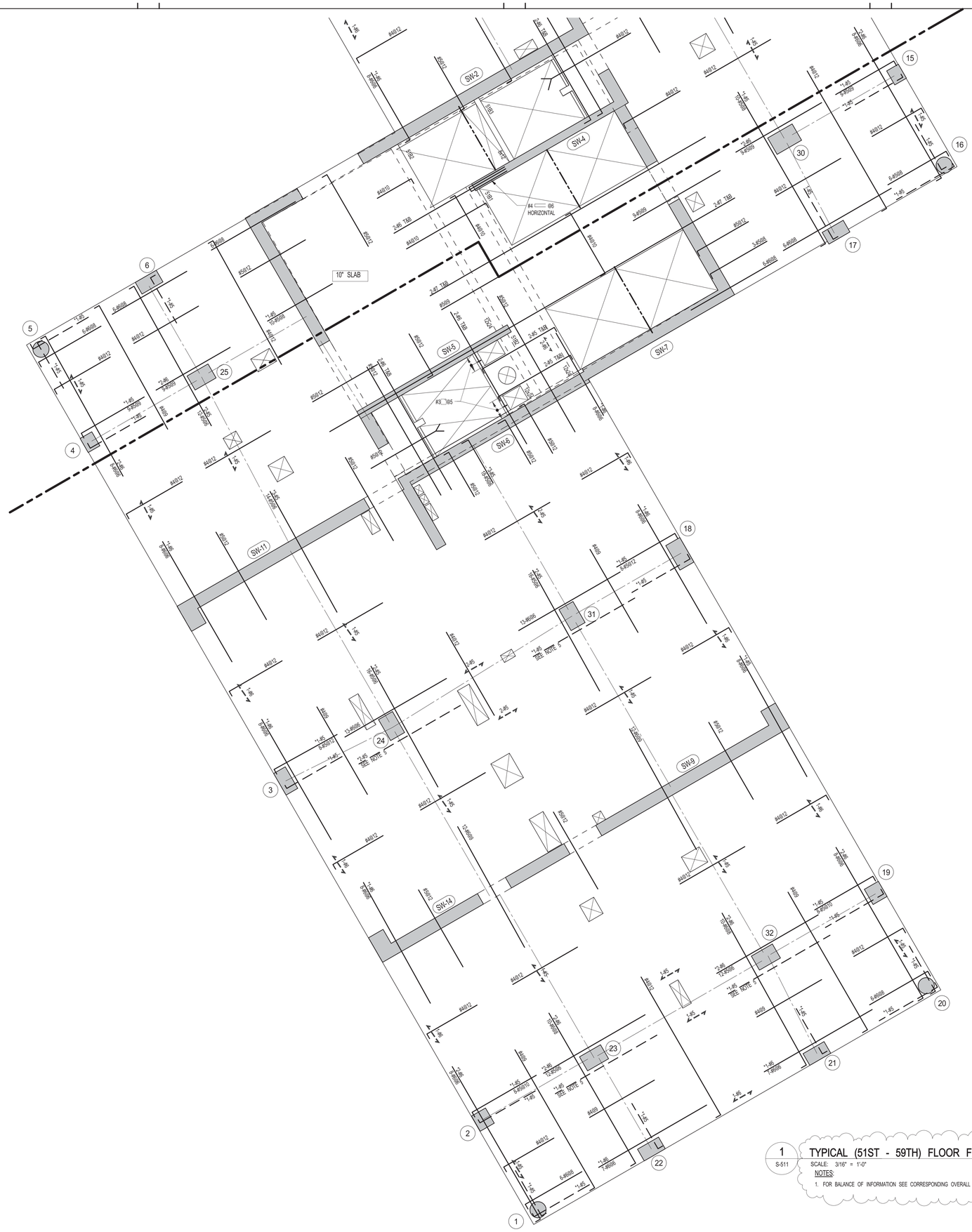

1 TYPICAL (51ST - 59TH) FLOOR FRAMING PLAN - PART 1
S-511 SCALE: 3/16" = 1'-0"

NOTES:
1. FOR BALANCE OF INFORMATION SEE CORRESPONDING OVERALL FRAMING PLAN.

KEY PLAN:

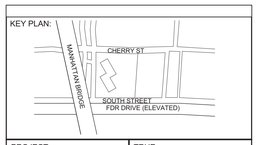

PROJECT NORTH | TRUE NORTH

DEVELOPER:
EXTELL DEVELOPMENT COMPANY
805 Third Ave, 7th Floor
New York, NY 10022
TEL: 212-712-6000 FAX: 212-712-6100

ARCHITECT OF RECORD:
AAI ARCHITECTS, P.C.
14 Wall Street, 2nd Floor
New York, NY 10005
TEL: 212-964-4040 FAX: 212-964-4090

INTERIOR DESIGNER:
MEYER DAVIS
180 Varick St, suite 404
New York, NY 10014
TEL: 212-627-5574

LANDSCAPE DESIGNER:
WEST 8 URBAN DESIGN & LANDSCAPE ARCHITECTURE P.C.
333 Hudson Street, Suite 905
New York, NY 10013
TEL: 212-285-0088 FAX: 212-285-0228

STRUCTURAL ENGINEERS:
WSP
228 East 45th Street
New York, NY 10017
TEL: 212-687-9888 FAX: 646-487-5501

MEP ENGINEERS:
ICOR ASSOCIATES, LLC
485 C Route 1 South, Suite 200
Iseline, NJ 08830
TEL: 908-272-3300 FAX: 908-272-4440

GEOTECHNICAL ENGINEERS:
LANGAN ENGINEERING & ENVIRONMENTAL SERVICES
21 Penn Plaza - 360 West 31st Street, 8th Floor
New York, NY 10001
TEL: 212.479.5400 FAX: 212.479.5444

No.	DESCRIPTION:	DATE:
1	CONCRETE BID PACKAGE	03-06-15
2	50% CONSTRUCTION DOCUMENTS	04-08-15
3	ISSUED FOR FILING	07-28-15

Discrepancies must be reported immediately to the Architect before proceeding. Only figured dimensions are to be used. Contractors must check all dimensions on site. This drawing is protected by copyright.

ALL DIMENSIONS ARE SHOWN IN IMPERIAL.

CONSULTANT:
WSP

PROJECT:
250 SOUTH STREET
NEW YORK, NY

DRAWING TITLE:
51ST-59TH FLOOR FRAMING -PART 1

SEAL & SIGNATURE:
STATE OF NEW YORK
AHMAD RAHIMIAN
No. 065537
LICENSED PROFESSIONAL ENGINEER

DATE:	03/03/15
PROJECT No:	1302510
DRAWN: CAD	REV:
CHK: CL	
SCALE: As indicated	
DWG No:	S-511.01
DOB PAGE No:	of

DOB EMPLOYEE STAMP:
Damian Titus
Buildings
APPROVED
Under Directive 2 of 1975
AMENDED APPLICATION
Date: 10/08/2015
NYC Development Hub

DOB B-SCAN:

30" x 42" Arch E1 - SHEET SIZE
FILE NAME:
PLOT DATE:

1 TYPICAL (51ST - 59TH) FLOOR FRAMING PLAN - PART 2
S-512
SCALE: 3/16" = 1'-0"

NOTES:
1. FOR BALANCE OF INFORMATION SEE CORRESPONDING OVERALL FRAMING PLAN.

KEY PLAN:

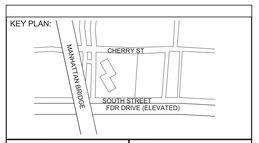

PROJECT NORTH

TRUE NORTH

DEVELOPER:
EXTELL DEVELOPMENT COMPANY
805 Third Ave, 7th Floor
New York, NY 10022
TEL: 212-712-6000 FAX: 212-712-6100

ARCHITECT OF RECORD:
AAI ARCHITECTS, P.C.
14 Wall Street, 2nd Floor
New York, NY 10005
TEL: 212-964-4040 FAX: 212-964-4090

INTERIOR DESIGNER:
MEYER DAVIS
180 Varick St, suite 404
New York, NY 10014
TEL: 212-627-5574

LANDSCAPE DESIGNER:
WEST 8 URBAN DESIGN & LANDSCAPE ARCHITECTURE P.C.
333 Hudson Street, Suite 905
New York, NY 10013
TEL: 212-285-0088 FAX: 212-285-0228

STRUCTURAL ENGINEERS:
WSP
228 East 45th Street
New York, NY 10017
TEL: 212-687-9888 FAX: 646-487-5501

MEP ENGINEERS:
ICOR ASSOCIATES, LLC
485 C Route 1 South, Suite 200
Iseline, NJ 08830
TEL: 908-272-3300 FAX: 908-272-4440

GEOTECHNICAL ENGINEERS:
LANGAN ENGINEERING & ENVIRONMENTAL SERVICES
21 Penn Plaza - 360 West 31st Street, 8th Floor
New York, NY 10001
TEL: 212.479.5400 FAX: 212.479.5444

No.	DESCRIPTION:	DATE:
1	CONCRETE BID PACKAGE	03-06-15
2	50% CONSTRUCTION DOCUMENTS	04-08-15
3	ISSUED FOR FILING	07-28-15

Discrepancies must be reported immediately to the Architect before proceeding. Only figured dimensions are to be used. Contractors must check all dimensions on site. This drawing is protected by copyright.

ALL DIMENSIONS ARE SHOWN IN IMPERIAL.

CONSULTANT:
WSP

PROJECT:
250 SOUTH STREET
NEW YORK, NY

DRAWING TITLE:
51ST-59TH FLOOR FRAMING -PART 2

SEAL & SIGNATURE:
STATE OF NEW YORK
AHMAD RAHIMIAN
No. 085537
LICENSED PROFESSIONAL ENGINEER

DATE:	03/03/15
PROJECT No:	1302510
DRAWN: CAD	REV:
CHK: CL	
SCALE: As indicated	
DWG No:	S-512.01
DOB PAGE No:	of

DOB EMPLOYEE STAMP:
Damian Titus
Buildings
APPROVED
Under Directive 2 of 1975
AMENDED APPLICATION
Date: 10/08/2015
NYC Development Hub

DOB B-SCAN:

1 S-600 60TH-70TH FLOOR FRAMING PLAN

SCALE: 3/32" = 1'-0"

NOTES:

1. TOP OF SLAB ELEVATION TO BE ____ U.O.N. ON PLAN
2. SLAB TO BE: 12" THICK (60TH - 69TH FL.) U.O.N. THUS ____ ON PLAN.
   14" THICK (70TH FL.) U.O.N. THUS ____ ON PLAN.
3. BOTTOM REINFORCEMENT TO BE #5@12 CONT. E.W.
4. FOR BALANCE OF NOTES SEE DRAWING S-010.
5. FOR STR. INTEGRITY REINF. ADD'L INFORMATION SEE S-965.

60TH FLOOR BEAM SCHEDULE

BEAM MARK	SIZE		REINFORCEMENT			STIRRUPS			REMARKS
	WIDTH	DEPTH	BOTTOM CONTINUOUS	TOP CONTINUOUS	TOP ADD'L BARS AT SUPPORT	TYPE	SIZE	SPACING	
60B1	16	24	3-#11	2-#11		1	#4	@10	
60B2	12	24	3-#11	3-#11		1	#4	@6	
60B4	8	12	2-#6	2-#6		1	#3	@5	

TYPE 1

STIRRUP TYPES

KEY PLAN:

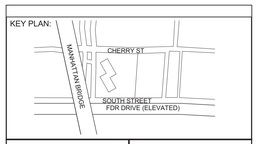

PROJECT NORTH

TRUE NORTH

DEVELOPER:
EXTELL DEVELOPMENT COMPANY
805 Third Ave, 7th Floor
New York, NY 10022
TEL: 212-712-6000 FAX: 212-712-6100

ARCHITECT OF RECORD:
AAI ARCHITECTS, P.C.
14 Wall Street, 2nd Floor
New York, NY 10005
TEL: 212-964-4040 FAX: 212-964-4090

INTERIOR DESIGNER:
MEYER DAVIS
180 Varick St, suite 404
New York, NY 10014
TEL: 212-627-5574

LANDSCAPE DESIGNER:
WEST 8 URBAN DESIGN & LANDSCAPE ARCHITECTURE P.C.
333 Hudson Street, Suite 905
New York, NY 10013
TEL: 212-285-0088 FAX: 212-285-0228

STRUCTURAL ENGINEERS:
WSP
228 East 45th Street
New York, NY 10017
TEL: 212-687-9888 FAX: 646-487-5501

MEP ENGINEERS:
ICOR ASSOCIATES, LLC
485 C Route 1 South, Suite 200
Iseline, NJ 08830
TEL: 908-272-3300 FAX: 908-272-4440

GEOTECHNICAL ENGINEERS:
LANGAN ENGINEERING & ENVIRONMENTAL SERVICES
21 Penn Plaza - 360 West 31st Street, 8th Floor
New York, NY 10001
TEL: 212.479.5400 FAX: 212.479.5444

No.	DESCRIPTION:	DATE:
1	50% DD	08-01-14
2	DESIGN DEVELOPMENT	10-07-14
3	CONCRETE BID PACKAGE	03-06-15
4	50% CONSTRUCTION DOCUMENTS	04-08-15
5	ISSUED FOR FILING	07-28-15

Discrepancies must be reported immediately to the Architect before proceeding. Only figured dimensions are to be used. Contractors must check all dimensions on site. This drawing is protected by copyright.

ALL DIMENSIONS ARE SHOWN IN IMPERIAL.

CONSULTANT:
WSP

PROJECT:
250 SOUTH STREET
NEW YORK, NY

DRAWING TITLE:
60TH-70TH FLOORS OVERALL FRAMING PLAN

SEAL & SIGNATURE:

DATE:	07/31/14
PROJECT No:	1302510
DRAWN: CAD	REV:
CHK: CL	
SCALE:	
DWG No:	S-600.00
DOB PAGE No:	of

DOB EMPLOYEE STAMP:

DOB B-SCAN:

FILE NAME:
PLOT DATE:

1 S-601 60TH-69TH FRAMING PLAN - PART 1

SCALE: 3/16" = 1'-0"

NOTE: FOR BALANCE OF INFORMATION SEE CORRESPONDING FRAMING PLAN

KEY PLAN:

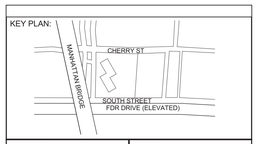

PROJECT NORTH

TRUE NORTH

DEVELOPER:
EXTELL DEVELOPMENT COMPANY
805 Third Ave, 7th Floor
New York, NY 10022
TEL: 212-712-6000 FAX: 212-712-6100

ARCHITECT OF RECORD:
AAI ARCHITECTS, P.C.
14 Wall Street, 2nd Floor
New York, NY 10005
TEL: 212-964-4040 FAX: 212-964-4090

INTERIOR DESIGNER:
MEYER DAVIS
180 Varick St, suite 404
New York, NY 10014
TEL: 212-627-5574

LANDSCAPE DESIGNER:
WEST 8 URBAN DESIGN & LANDSCAPE ARCHITECTURE P.C.
333 Hudson Street, Suite 905
New York, NY 10013
TEL: 212-285-0088 FAX: 212-285-0228

STRUCTURAL ENGINEERS:
WSP
228 East 45th Street
New York, NY 10017
TEL: 212-687-9888 FAX: 646-487-5501

MEP ENGINEERS:
ICOR ASSOCIATES, LLC
485 C Route 1 South, Suite 200
Iseline, NJ 08830
TEL: 908-272-3300 FAX: 908-272-4440

GEOTECHNICAL ENGINEERS:
LANGAN ENGINEERING & ENVIRONMENTAL SERVICES
21 Penn Plaza - 360 West 31st Street, 8th Floor
New York, NY 10001
TEL: 212.479.5400 FAX: 212.479.5444

No.	DESCRIPTION:	DATE:
1	50% DD	08-01-14
2	DESIGN DEVELOPMENT	10-07-14
3	CONCRETE BID PACKAGE	03-06-15
4	50% CONSTRUCTION DOCUMENTS	04-08-15
5	ISSUED FOR FILING	07-28-15

Discrepancies must be reported immediately to the Architect before proceeding. Only figured dimensions are to be used. Contractors must check all dimensions on site. This drawing is protected by copyright.

ALL DIMENSIONS ARE SHOWN IN IMPERIAL.

CONSULTANT:
WSP

PROJECT:
250 SOUTH STREET
NEW YORK, NY

DRAWING TITLE:
60TH-70TH FRAMING PLAN - PART 1

SEAL & SIGNATURE:
STATE OF NEW YORK
AHMAD RAHIMIAN
No. 065537
LICENSED PROFESSIONAL ENGINEER

DATE:	07/31/14
PROJECT No:	1302510
DRAWN: CAD	REV:
CHK: CL	
SCALE:	
DWG No:	S-601.00
DOB PAGE No:	of

DOB EMPLOYEE STAMP:
Damian Titus
NYC Buildings
APPROVED
Under Directive 2 of 1975
AMENDED APPLICATION
Date: 10/08/2015
NYC Development Hub

DOB B-SCAN:

DEPT OF BLDGS121185528 Job Number
ES542919743 Scan Code

1 S-602 60TH-69TH FRAMING PLAN - PART 2

SCALE: 3/16" = 1'-0"

NOTE: FOR BALANCE OF INFORMATION SEE CORRESPONDING FRAMING PLAN

KEY PLAN:

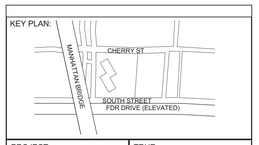

PROJECT NORTH

TRUE NORTH

DEVELOPER:
EXTELL DEVELOPMENT COMPANY
805 Third Ave, 7th Floor
New York, NY 10022
TEL: 212-712-6000 FAX: 212-712-6100

ARCHITECT OF RECORD:
AAI ARCHITECTS, P.C.
14 Wall Street, 2nd Floor
New York, NY 10005
TEL: 212-964-4040 FAX: 212-964-4090

INTERIOR DESIGNER:
MEYER DAVIS
180 Varick St, suite 404
New York, NY 10014
TEL: 212-627-5574

LANDSCAPE DESIGNER:
WEST 8 URBAN DESIGN & LANDSCAPE ARCHITECTURE P.C.
333 Hudson Street, Suite 905
New York, NY 10013
TEL: 212-285-0088 FAX: 212-285-0228

STRUCTURAL ENGINEERS:
WSP
228 East 45th Street
New York, NY 10017
TEL: 212-687-9888 FAX: 646-487-5501

MEP ENGINEERS:
ICOR ASSOCIATES, LLC
485 C Route 1 South, Suite 200
Iseline, NJ 08830
TEL: 908-272-3300 FAX: 908-272-4440

GEOTECHNICAL ENGINEERS:
LANGAN ENGINEERING & ENVIRONMENTAL SERVICES
21 Penn Plaza - 360 West 31st Street, 8th Floor
New York, NY 10001
TEL: 212.479.5400 FAX: 212.479.5444

No.	DESCRIPTION:	DATE:
1	50% DD	08-01-14
2	DESIGN DEVELOPMENT	10-07-14
3	CONCRETE BID PACKAGE	03-06-15
4	50% CONSTRUCTION DOCUMENTS	04-08-15
5	ISSUED FOR FILING	07-28-15

Discrepancies must be reported immediately to the Architect before proceeding. Only figured dimensions are to be used. Contractors must check all dimensions on site. This drawing is protected by copyright.

ALL DIMENSIONS ARE SHOWN IN IMPERIAL.

CONSULTANT:
WSP

PROJECT:
250 SOUTH STREET
NEW YORK, NY

DRAWING TITLE:
60TH-70TH FRAMING PLAN - PART 2

SEAL & SIGNATURE:
STATE OF NEW YORK
AHMAD RAHIMIAN
No. 065537
LICENSED PROFESSIONAL ENGINEER

DATE:	07/31/14
PROJECT No:	1302510
DRAWN: CAD	REV:
CHK: CL	
SCALE:	
DWG No:	S-602.00
DOB PAGE No:	of

DOB EMPLOYEE STAMP:
Damian Titus
Buildings
APPROVED
Under Directive 2 of 1975
AMENDED APPLICATION
Date: 10/08/2015
NYC Development Hub

DOB B-SCAN:

30" x 42" Arch E1 - SHEET SIZE
FILE NAME:
PLOT DATE:

DEPT OF BLDGS 121185528 Job Number
ES493607281 Scan Code

1 S-710 **71ST FLOOR OVERALL FRAMING PLAN**

SCALE: 3/32" = 1'-0"

NOTES:

1. TOP OF SLAB ELEVATION TO BE +770'-1" U.O.N. ON PLAN
2. SLAB TO BE 24" THICK U.O.N.
3. SLAB REINFORCEMENT TO BE: #8@12 T&B E.W. FOR 24" SLAB
4. (P) INDICATES 27X14 POST w/6-#6
5. FOR BALANCE OF NOTES SEE DRAWING S-010.

71ST FLOOR BEAM SCHEDULE

BEAM MARK	SIZE WIDTH	SIZE DEPTH	REINFORCEMENT BOTTOM CONTINUOUS	REINFORCEMENT TOP CONTINUOUS	REINFORCEMENT TOP ADD'L BARS AT SUPPORT	STIRRUPS TYPE	STIRRUPS SIZE	STIRRUPS SPACING	REMARKS
71B1	72	50/ 60	20-#11	20-#11		5	#4	@10	#6@10 HORIZ. E.F.

TYPE 5

KEY PLAN:

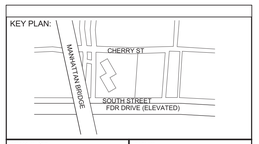

PROJECT NORTH

TRUE NORTH

DEVELOPER:
EXTELL DEVELOPMENT COMPANY
805 Third Ave, 7th Floor
New York, NY 10022
TEL: 212-712-6000 FAX: 212-712-6100

ARCHITECT OF RECORD:
AAI ARCHITECTS, P.C.
14 Wall Street, 2nd Floor
New York, NY 10005
TEL: 212-964-4040 FAX: 212-964-4090

INTERIOR DESIGNER:
MEYER DAVIS
180 Varick St, suite 404
New York, NY 10014
TEL: 212-627-5574

LANDSCAPE DESIGNER:
WEST 8 URBAN DESIGN & LANDSCAPE ARCHITECTURE P.C.
333 Hudson Street, Suite 905
New York, NY 10013
TEL: 212-285-0088 FAX: 212-285-0228

STRUCTURAL ENGINEERS:
WSP
228 East 45th Street
New York, NY 10017
TEL: 212-687-9888 FAX: 646-487-5501

MEP ENGINEERS:
ICOR ASSOCIATES, LLC
485 C Route 1 South, Suite 200
Iseline, NJ 08830
TEL: 908-272-3300 FAX: 908-272-4440

GEOTECHNICAL ENGINEERS:
LANGAN ENGINEERING & ENVIRONMENTAL SERVICES
21 Penn Plaza - 360 West 31st Street, 8th Floor
New York, NY 10001
TEL: 212.479.5400 FAX: 212.479.5444

No.	DESCRIPTION:	DATE:
1	50% SD	02-28-14
2	100%SD	04-25-14
3	50% DD	08-01-14
4	DESIGN DEVELOPMENT	10-07-14
5	CONCRETE BID PACKAGE	03-06-15
6	50% CONSTRUCTION DOCUMENTS	04-08-15
7	ISSUED FOR FILING	07-28-15

Discrepancies must be reported immediately to the Architect before proceeding. Only figured dimensions are to be used. Contractors must check all dimensions on site. This drawing is protected by copyright.

ALL DIMENSIONS ARE SHOWN IN IMPERIAL.

CONSULTANT:
WSP

PROJECT:
250 SOUTH STREET
NEW YORK, NY

DRAWING TITLE:
71ST FLOOR (MECHANICAL)
OVERALL FRAMING PLAN

SEAL & SIGNATURE:

DATE:	04/24/14
PROJECT No:	1302510
DRAWN: CAD	REV:
CHK: CL	
SCALE:	
DWG No:	S-710.00
DOB PAGE No:	of

DOB EMPLOYEE STAMP:

DOB B-SCAN:

30" x 42" Arch E1 - SHEET SIZE
FILE NAME:
PLOT DATE:

DEPT OF BLDGS 121185528 Job Number
E:S202187641 Scan Code

1 S-711 71ST FLOOR FRAMING PLAN - PART 1

SCALE: 3/16" = 1'-0"

NOTES:

1. FOR BALANCE OF INFORMATION SEE CORRESPONDING OVERALL FRAMING PLAN

KEY PLAN:

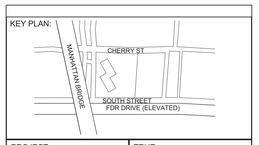

PROJECT NORTH

TRUE NORTH

DEVELOPER:
EXTELL DEVELOPMENT COMPANY
805 Third Ave, 7th Floor
New York, NY 10022
TEL: 212-712-6000 FAX: 212-712-6100

ARCHITECT OF RECORD:
AAI ARCHITECTS, P.C.
14 Wall Street, 2nd Floor
New York, NY 10005
TEL: 212-964-4040 FAX: 212-964-4090

INTERIOR DESIGNER:
MEYER DAVIS
180 Varick St, suite 404
New York, NY 10014
TEL: 212-627-5574

LANDSCAPE DESIGNER:
WEST 8 URBAN DESIGN & LANDSCAPE ARCHITECTURE P.C.
333 Hudson Street, Suite 905
New York, NY 10013
TEL: 212-285-0088 FAX: 212-285-0228

STRUCTURAL ENGINEERS:
WSP
228 East 45th Street
New York, NY 10017
TEL: 212-687-9888 FAX: 646-487-5501

MEP ENGINEERS:
ICOR ASSOCIATES, LLC
485 C Route 1 South, Suite 200
Iseline, NJ 08830
TEL: 908-272-3300 FAX: 908-272-4440

GEOTECHNICAL ENGINEERS:
LANGAN ENGINEERING & ENVIRONMENTAL SERVICES
21 Penn Plaza - 360 West 31st Street, 8th Floor
New York, NY 10001
TEL: 212.479.5400 FAX: 212.479.5444

No.	DESCRIPTION:	DATE:
1	DESIGN DEVELOPMENT	10-07-14
2	CONCRETE BID PACKAGE	03-06-15
3	50% CONSTRUCTION DOCUMENTS	04-08-15
4	ISSUED FOR FILING	07-28-15

Discrepancies must be reported immediately to the Architect before proceeding. Only figured dimensions are to be used. Contractors must check all dimensions on site. This drawing is protected by copyright.

ALL DIMENSIONS ARE SHOWN IN IMPERIAL.

CONSULTANT:
WSP

PROJECT:
250 SOUTH STREET
NEW YORK, NY

DRAWING TITLE:
71ST FLOOR (MECHANICAL)
FRAMING PLAN - PART 1

SEAL & SIGNATURE:
STATE OF NEW YORK
AMMAD RAHIMIAN
No. 065537
LICENSED PROFESSIONAL ENGINEER

DATE:	09/26/14
PROJECT No:	1302510
DRAWN: CAD	REV:
CHK: CL	
SCALE:	
DWG No:	S-711.00
DOB PAGE No:	of

DOB EMPLOYEE STAMP:
Damian Titus
NYC Buildings
APPROVED
Under Directive 2 of 1975
AMENDED APPLICATION
Date: 10/08/2015
NYC Development Hub

DOB B-SCAN:

30" x 42" Arch E1 - SHEET SIZE

FILE NAME:
PLOT DATE:

DEPT OF BLDGS 121185528 Job Number
ES464203542 Scan Code

1 S-712 71ST FLOOR FRAMING PLAN - PART 2

SCALE: 3/16" = 1'-0"

NOTES:

1. FOR BALANCE OF INFORMATION SEE CORRESPONDING OVERALL FRAMING PLAN

KEY PLAN:

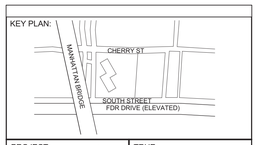

PROJECT NORTH

TRUE NORTH

DEVELOPER:
EXTELL DEVELOPMENT COMPANY
805 Third Ave, 7th Floor
New York, NY 10022
TEL: 212-712-6000 FAX: 212-712-6100

ARCHITECT OF RECORD:
AAI ARCHITECTS, P.C.
14 Wall Street, 2nd Floor
New York, NY 10005
TEL: 212-964-4040 FAX: 212-964-4090

INTERIOR DESIGNER:
MEYER DAVIS
180 Varick St, suite 404
New York, NY 10014
TEL: 212-627-5574

LANDSCAPE DESIGNER:
WEST 8 URBAN DESIGN & LANDSCAPE ARCHITECTURE P.C.
333 Hudson Street, Suite 905
New York, NY 10013
TEL: 212-285-0088 FAX: 212-285-0228

STRUCTURAL ENGINEERS:
WSP
228 East 45th Street
New York, NY 10017
TEL: 212-687-9888 FAX: 646-487-5501

MEP ENGINEERS:
ICOR ASSOCIATES, LLC
485 C Route 1 South, Suite 200
Iseline, NJ 08830
TEL: 908-272-3300 FAX: 908-272-4440

GEOTECHNICAL ENGINEERS:
LANGAN ENGINEERING & ENVIRONMENTAL SERVICES
21 Penn Plaza - 360 West 31st Street, 8th Floor
New York, NY 10001
TEL: 212.479.5400 FAX: 212.479.5444

No.	DESCRIPTION:	DATE:
1	DESIGN DEVELOPMENT	10-07-14
2	CONCRETE BID PACKAGE	03-06-15
3	50% CONSTRUCTION DOCUMENTS	04-08-15
4	ISSUED FOR FILING	07-28-15

Discrepancies must be reported immediately to the Architect before proceeding. Only figured dimensions are to be used. Contractors must check all dimensions on site. This drawing is protected by copyright.

ALL DIMENSIONS ARE SHOWN IN IMPERIAL.

CONSULTANT:
WSP

PROJECT:
250 SOUTH STREET
NEW YORK, NY

DRAWING TITLE:
71ST FLOOR (MECHANICAL)
FRAMING PLAN - PART 2

SEAL & SIGNATURE:
STATE OF NEW YORK
AHMAD RAHIMIAN
No. 085537
LICENSED PROFESSIONAL ENGINEER

DATE:	09/26/14
PROJECT No:	1302510
DRAWN: CAD	REV:
CHK: CL	
SCALE:	
DWG No:	S-712.00
DOB PAGE No:	of

DOB EMPLOYEE STAMP:
Damian Titus
NYC Buildings
APPROVED
Under Directive 2 of 1975
AMENDED APPLICATION
Date: 10/08/2015
NYC Development Hub

DOB B-SCAN:

30" x 42" Arch E1 - SHEET SIZE
FILE NAME:
PLOT DATE:

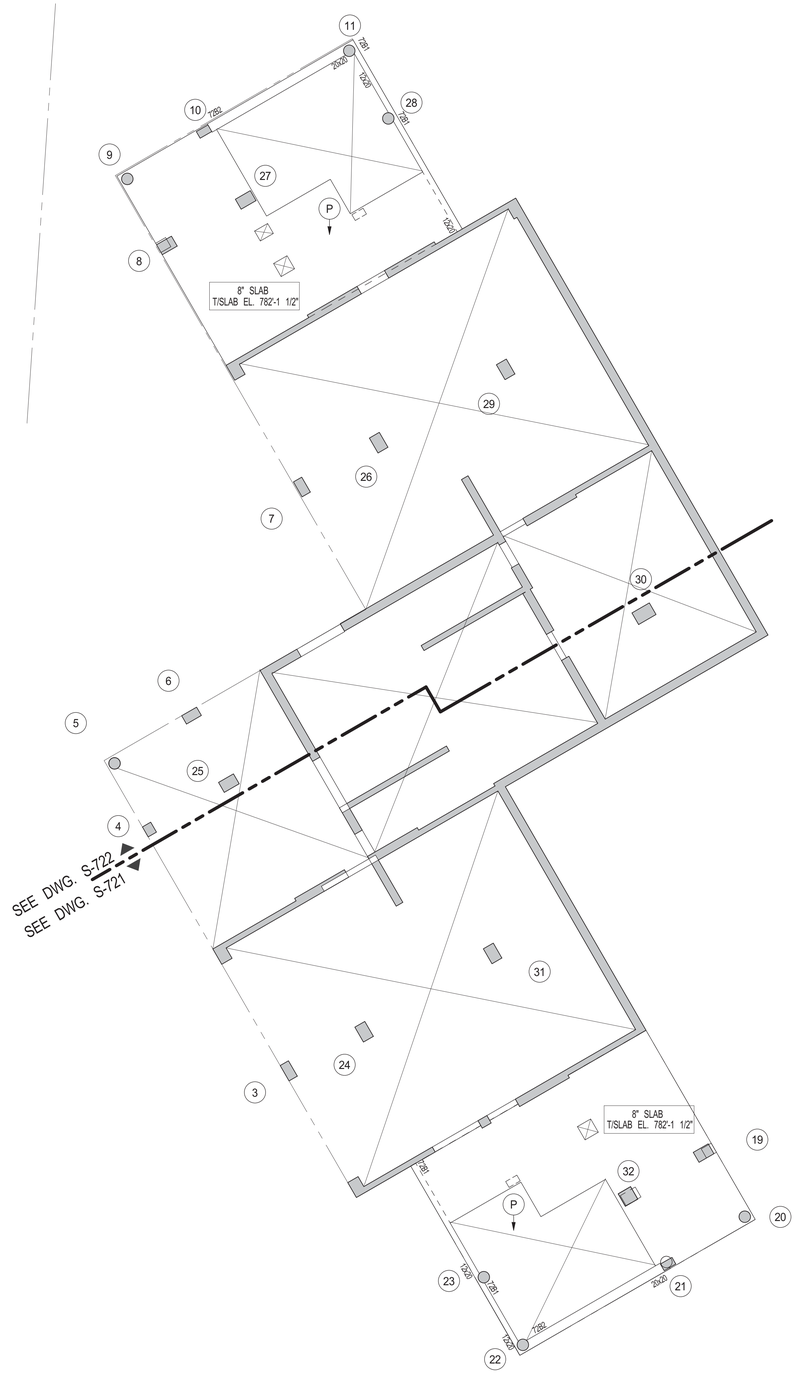

1 72ND OVERALL FLOOR FRAMING PLAN

3/32" = 1'-0"

NOTES:

1. TOP OF SLAB ELEVATION TO BE +782'-1 1/2" U.O.N. ON PLAN
2. SLAB TO BE 8" THICK U.O.N.
3. SLAB REINFORCEMENT TO BE: #4@12 BOT. E.W. FOR 8" SLAB
4. (P) INDICATES 27x14 POST W/6-#6
5. FOR BALANCE OF NOTES SEE DRAWING S-010.

ACH FACE

BEAM MARK	SIZE		REINFORCEMENT			STIRRUPS			REMARKS
	WIDTH	DEPTH	BOTTOM CONTINUOUS	TOP CONTINUOUS	TOP ADD'L BARS AT SUPPORT	TYPE	SIZE	SPACING	
72B1	12	20	2-#9	2-#9		1	#4	@8	
72B2	20	20	3-#8	3-#8		1	#4	@8	EXTEND TOP REINF. INTO BEAM72B1

TYPE 1

KEY PLAN:

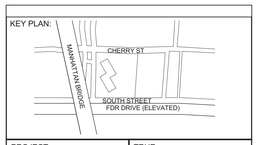

PROJECT NORTH

TRUE NORTH

DEVELOPER:
EXTELL DEVELOPMENT COMPANY
805 Third Ave, 7th Floor
New York, NY 10022
TEL: 212-712-6000 FAX: 212-712-6100

ARCHITECT OF RECORD:
AAI ARCHITECTS, P.C.
14 Wall Street, 2nd Floor
New York, NY 10005
TEL: 212-964-4040 FAX: 212-964-4090

INTERIOR DESIGNER:
MEYER DAVIS
180 Varick St, suite 404
New York, NY 10014
TEL: 212-627-5574

LANDSCAPE DESIGNER:
WEST 8 URBAN DESIGN & LANDSCAPE ARCHITECTURE P.C.
333 Hudson Street, Suite 905
New York, NY 10013
TEL: 212-285-0088 FAX: 212-285-0228

STRUCTURAL ENGINEERS:
WSP
228 East 45th Street
New York, NY 10017
TEL: 212-687-9888 FAX: 646-487-5501

MEP ENGINEERS:
ICOR ASSOCIATES, LLC
485 C Route 1 South, Suite 200
Iseline, NJ 08830
TEL: 908-272-3300 FAX: 908-272-4440

GEOTECHNICAL ENGINEERS:
LANGAN ENGINEERING & ENVIRONMENTAL SERVICES
21 Penn Plaza - 360 West 31st Street, 8th Floor
New York, NY 10001
TEL: 212.479.5400 FAX: 212.479.5444

No.	DESCRIPTION:	DATE:
1	CONCRETE BID PACKAGE	03-06-15
2	50% CONSTRUCTION DOCUMENTS	04-08-15
3	ISSUED FOR FILING	07-28-15

Discrepancies must be reported immediately to the Architect before proceeding. Only figured dimensions are to be used. Contractors must check all dimensions on site. This drawing is protected by copyright.

ALL DIMENSIONS ARE SHOWN IN IMPERIAL.

CONSULTANT:
WSP

PROJECT:
250 SOUTH STREET
NEW YORK, NY

DRAWING TITLE:
72ND FLOOR OVERALL FRAMING PLAN

SEAL & SIGNATURE:
STATE OF NEW YORK
AHMAD RAHIMIAN
No. 085537
LICENSED PROFESSIONAL ENGINEER

DATE:	03/06/15
PROJECT No:	1302510
DRAWN: CAD	REV:
CHK: CL	
SCALE: As indicated	
DWG No:	S-720.00
DOB PAGE No:	of

DOB EMPLOYEE STAMP:
Damian Titus
Buildings
APPROVED
Under Directive 2 of 1975
AMENDED APPLICATION
Date: 10/08/2015
NYC Development Hub

DOB B-SCAN:

30" x 42" Arch E1 - SHEET SIZE

FILE NAME:
PLOT DATE:

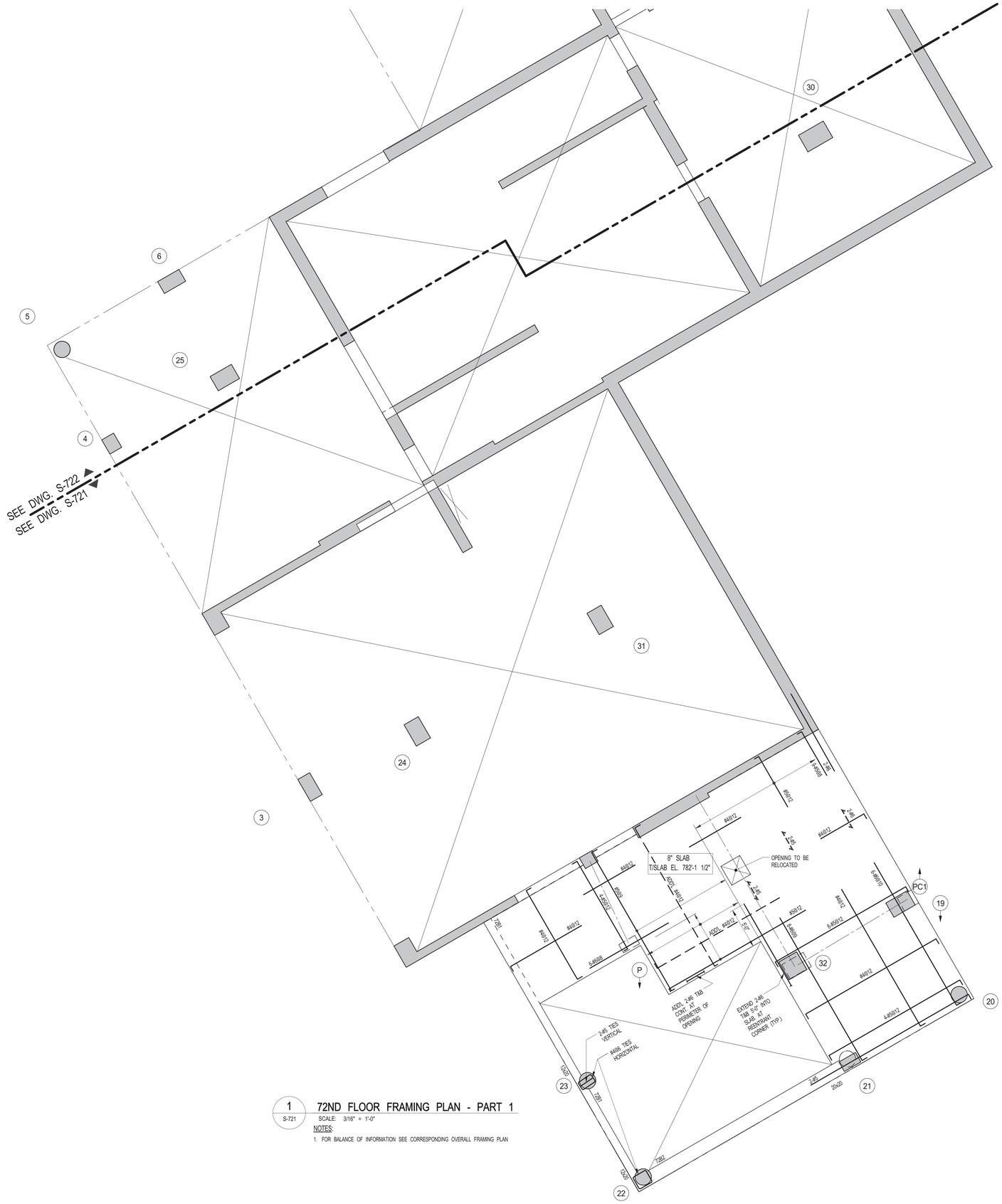

1 S-721 72ND FLOOR FRAMING PLAN - PART 1

SCALE: 3/16" = 1'-0"

NOTES:

1. FOR BALANCE OF INFORMATION SEE CORRESPONDING OVERALL FRAMING PLAN

KEY PLAN:

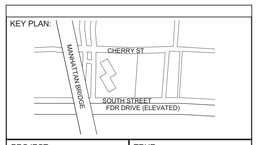

PROJECT NORTH

TRUE NORTH

DEVELOPER:
EXTELL DEVELOPMENT COMPANY
805 Third Ave, 7th Floor
New York, NY 10022
TEL: 212-712-6000 FAX: 212-712-6100

ARCHITECT OF RECORD:
AAI ARCHITECTS, P.C.
14 Wall Street, 2nd Floor
New York, NY 10005
TEL: 212-964-4040 FAX: 212-964-4090

INTERIOR DESIGNER:
MEYER DAVIS
180 Varick St, suite 404
New York, NY 10014
TEL: 212-627-5574

LANDSCAPE DESIGNER:
WEST 8 URBAN DESIGN & LANDSCAPE ARCHITECTURE P.C.
333 Hudson Street, Suite 905
New York, NY 10013
TEL: 212-285-0088 FAX: 212-285-0228

STRUCTURAL ENGINEERS:
WSP
228 East 45th Street
New York, NY 10017
TEL: 212-687-9888 FAX: 646-487-5501

MEP ENGINEERS:
ICOR ASSOCIATES, LLC
485 C Route 1 South, Suite 200
Iseline, NJ 08830
TEL: 908-272-3300 FAX: 908-272-4440

GEOTECHNICAL ENGINEERS:
LANGAN ENGINEERING & ENVIRONMENTAL SERVICES
21 Penn Plaza - 360 West 31st Street, 8th Floor
New York, NY 10001
TEL: 212.479.5400 FAX: 212.479.5444

No.	DESCRIPTION:	DATE:
1	DESIGN DEVELOPMENT	10-07-14
2	CONCRETE BID PACKAGE	03-06-15
3	50% CONSTRUCTION DOCUMENTS	04-08-15
4	ISSUED FOR FILING	07-28-15

Discrepancies must be reported immediately to the Architect before proceeding. Only figured dimensions are to be used. Contractors must check all dimensions on site. This drawing is protected by copyright.

ALL DIMENSIONS ARE SHOWN IN IMPERIAL.

CONSULTANT:
WSP

PROJECT:
250 SOUTH STREET
NEW YORK, NY

DRAWING TITLE:
72ND FLOOR FRAMING PLAN-PART 1

SEAL & SIGNATURE:
STATE OF NEW YORK
AHMAD RAHIMIAN
No. 065537
LICENSED PROFESSIONAL ENGINEER

DATE:	10/02/14
PROJECT No:	1302510
DRAWN: CAD	REV:
CHK: CL	
SCALE:	
DWG No:	S-721.00
DOB PAGE No:	of

DOB EMPLOYEE STAMP:
Damian Titus
NYC Buildings
APPROVED
Under Directive 2 of 1975
AMENDED APPLICATION
Date: 10/08/2015
NYC Development Hub

DOB B-SCAN:

30" x 42" Arch E1 - SHEET SIZE

FILE NAME:
PLOT DATE:

DEPT OF BLDGS121805639 Job Number
E1540854351185 Scan Code
30" x 42" Arch E1 - SHEET SIZE

1 S-722 — 72ND FLOOR FRAMING PLAN - PART 2

SCALE: 3/16" = 1'-0"

NOTES:

1. FOR BALANCE OF INFORMATION SEE CORRESPONDING OVERALL FRAMING PLAN

KEY PLAN:

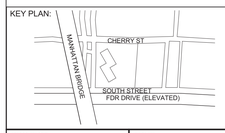

PROJECT NORTH

TRUE NORTH

DEVELOPER:
EXTELL DEVELOPMENT COMPANY
805 Third Ave, 7th Floor
New York, NY 10022
TEL: 212-712-6000 FAX: 212-712-6100

ARCHITECT OF RECORD:
AAI ARCHITECTS, P.C.
14 Wall Street, 2nd Floor
New York, NY 10005
TEL: 212-964-4040 FAX: 212-964-4090

INTERIOR DESIGNER:
MEYER DAVIS
180 Varick St, suite 404
New York, NY 10014
TEL: 212-627-5574

LANDSCAPE DESIGNER:
WEST 8 URBAN DESIGN & LANDSCAPE ARCHITECTURE P.C.
333 Hudson Street, Suite 905
New York, NY 10013
TEL: 212-285-0088 FAX: 212-285-0228

STRUCTURAL ENGINEERS:
WSP
228 East 45th Street
New York, NY 10017
TEL: 212-687-9888 FAX: 646-487-5501

MEP ENGINEERS:
ICOR ASSOCIATES, LLC
485 C Route 1 South, Suite 200
Iseline, NJ 08830
TEL: 908-272-3300 FAX: 908-272-4440

GEOTECHNICAL ENGINEERS:
LANGAN ENGINEERING & ENVIRONMENTAL SERVICES
21 Penn Plaza - 360 West 31st Street, 8th Floor
New York, NY 10001
TEL: 212.479.5400 FAX: 212.479.5444

No.	DESCRIPTION:	DATE:
1	DESIGN DEVELOPMENT	10-07-14
2	CONCRETE BID PACKAGE	03-06-15
3	50% CONSTRUCTION DOCUMENTS	04-08-15
4	ISSUED FOR FILING	07-28-15

Discrepancies must be reported immediately to the Architect before proceeding. Only figured dimensions are to be used. Contractors must check all dimensions on site. This drawing is protected by copyright.

ALL DIMENSIONS ARE SHOWN IN IMPERIAL.

CONSULTANT: WSP

PROJECT:
250 SOUTH STREET
NEW YORK, NY

DRAWING TITLE:
72ND FLOOR FRAMING PLAN-PART 2

SEAL & SIGNATURE:

DATE:	10/02/14
PROJECT No:	1302510
DRAWN: CAD	REV:
CHK: CL	
SCALE:	
DWG No:	S-722.00
DOB PAGE No:	of

DOB EMPLOYEE STAMP:

DOB B-SCAN:

FILE NAME:
PLOT DATE:

DEPT OF BLDGS121185533 Job Number
E1315715633 Scan Code
30" x 42" Arch E1 - SHEET SIZE

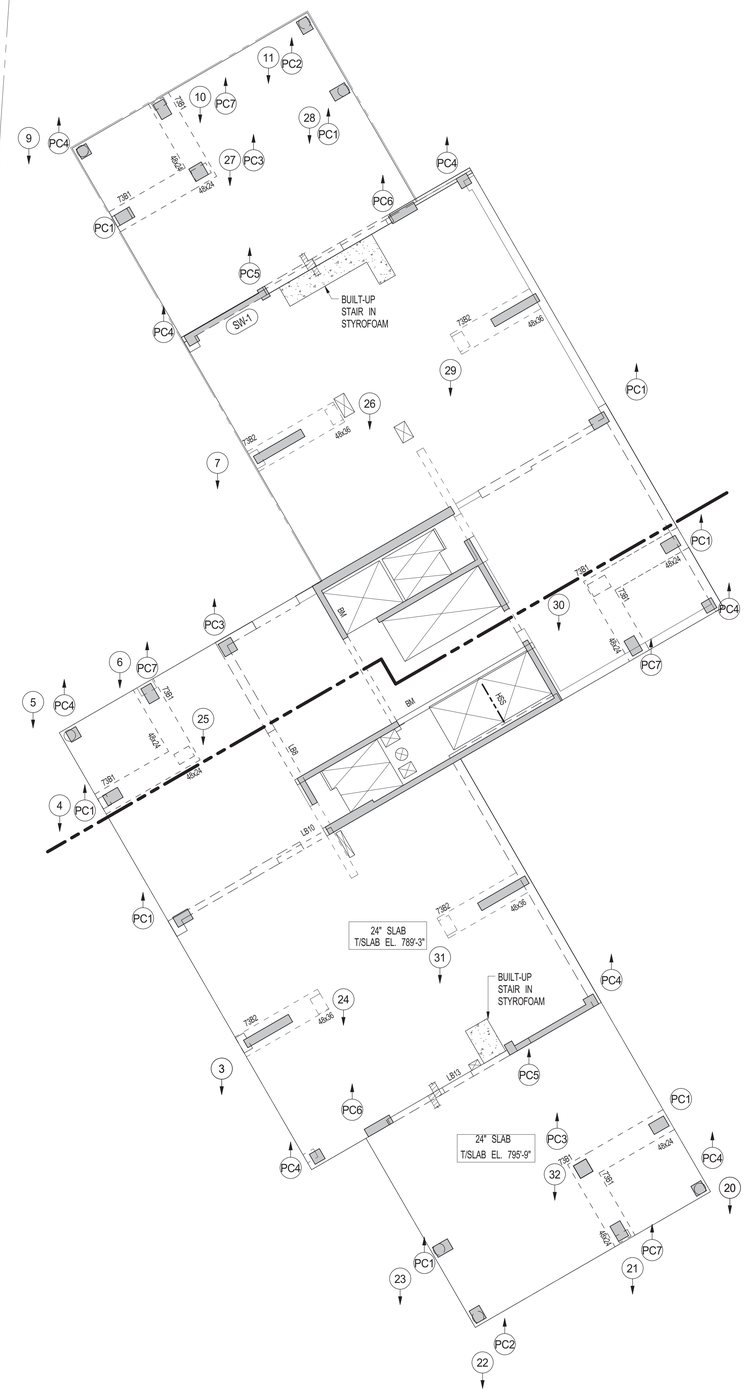

1 S-730 — 73RD ROOF-MECH 3 OVERALL FRAMING PLAN
SCALE: 3/32" = 1'-0"

NOTES:

1. TOP OF SLAB ELEVATION TO BE +835'-7" U.O.N. ON PLAN
2. SLAB TO BE 24" THICK U.O.N.
3. SLAB REINFORCEMENT TO BE: #8@12 T&B E.W. FOR 24" SLAB
   #6@12 T&B E.W. FOR 10" SLAB

PC1 INDICATES 36X24 POST W/ 8-#9V & 4@12 O.C.TIES
PC2 INDICATES 24X30 POST W/ 8-#9V & 4@12 O.C.TIES
PC3 INDICATES 30X30 POST W/ 8-#9V & 4@12 O.C.TIES
PC4 INDICATES 24X24 POST W/ 8-#9V & 4@12 O.C.TIES
PC5 INDICATES 18X24 POST W/ 8-#9V & 4@12 O.C.TIES
PC6 INDICATES 60X18 POST W/ 8-#9V & 4@12 O.C.TIES
PC7 INDICATES 24X36 POST W/ 8-#9V & 4@12 O.C.TIES

4. FOR BALANCE OF NOTES SEE DRAWING S-010.

73RD FLOOR BEAM SCHEDULE

BEAM MARK	SIZE WIDTH	SIZE DEPTH	REINFORCEMENT BOTTOM CONTINUOUS	REINFORCEMENT TOP CONTINUOUS	REINFORCEMENT TOP ADD'L BARS AT SUPPORT	STIRRUPS TYPE	STIRRUPS SIZE	STIRRUPS SPACING	REMARKS
73B1	48	24	12-#10	12-#10		2	#4	@10	
73B2	48	36	15-#11	15-#11		2	#4	@10	

TYPE 2
STIRRUP TYPES

KEY PLAN:
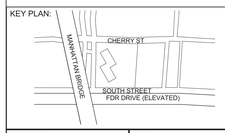

PROJECT NORTH
TRUE NORTH

DEVELOPER:
EXTELL DEVELOPMENT COMPANY
805 Third Ave, 7th Floor
New York, NY 10022
TEL: 212-712-6000 FAX: 212-712-6100

ARCHITECT OF RECORD:
AAI ARCHITECTS, P.C.
14 Wall Street, 2nd Floor
New York, NY 10005
TEL: 212-964-4040 FAX: 212-964-4090

INTERIOR DESIGNER:
MEYER DAVIS
180 Varick St, suite 404
New York, NY 10014
TEL: 212-627-5574

LANDSCAPE DESIGNER:
WEST 8 URBAN DESIGN & LANDSCAPE ARCHITECTURE P.C.
333 Hudson Street, Suite 905
New York, NY 10013
TEL: 212-285-0088 FAX: 212-285-0228

STRUCTURAL ENGINEERS:
WSP
228 East 45th Street
New York, NY 10017
TEL: 212-687-9888 FAX: 646-487-5501

MEP ENGINEERS:
ICOR ASSOCIATES, LLC
485 C Route 1 South, Suite 200
Iseline, NJ 08830
TEL: 908-272-3300 FAX: 908-272-4440

GEOTECHNICAL ENGINEERS:
LANGAN ENGINEERING & ENVIRONMENTAL SERVICES
21 Penn Plaza - 360 West 31st Street, 8th Floor
New York, NY 10001
TEL: 212.479.5400 FAX: 212.479.5444

No.	DESCRIPTION:	DATE:
1	50% SD	02-28-14
2	100%SD	04-25-14
3	50% DD	08-01-14
4	CURTAIN WALL PACKAGE	09-26-14
5	DESIGN DEVELOPMENT	10-07-14
6	CONCRETE BID PACKAGE	03-06-15
7	50% CONSTRUCTION DOCUMENTS	04-08-15
8	ADDENDUM #10	07-20-15
9	ISSUED FOR FILING	07-28-15

Discrepancies must be reported immediately to the Architect before proceeding. Only figured dimensions are to be used. Contractors must check all dimensions on site. This drawing is protected by copyright.

ALL DIMENSIONS ARE SHOWN IN IMPERIAL.

CONSULTANT: WSP

PROJECT:
250 SOUTH STREET
NEW YORK, NY

DRAWING TITLE:
73RD ROOF-MECH 3 OVERALL FRAMING PLAN

SEAL & SIGNATURE:
STATE OF NEW YORK — AHMAD RAHIMIAN — No. 085527 — LICENSED PROFESSIONAL ENGINEER

DATE: 02/28/14
PROJECT No: 1302510
DRAWN: CAD REV:
CHK: CL
SCALE:
DWG No: **S-730.00**
DOB PAGE No: 01

DOB EMPLOYEE STAMP:
Damian Titus
Buildings
APPROVED
Under Directive 2 of 1975
AMENDED APPLICATION
Date: 10/08/2015
NYC Development Hub

DOB B-SCAN:

FILE NAME:
PLOT DATE:

30" x 42" Arch E1 - SHEET SIZE

DEPT OF BLDGS 121185528 Job Number

E5177606380 Scan Code

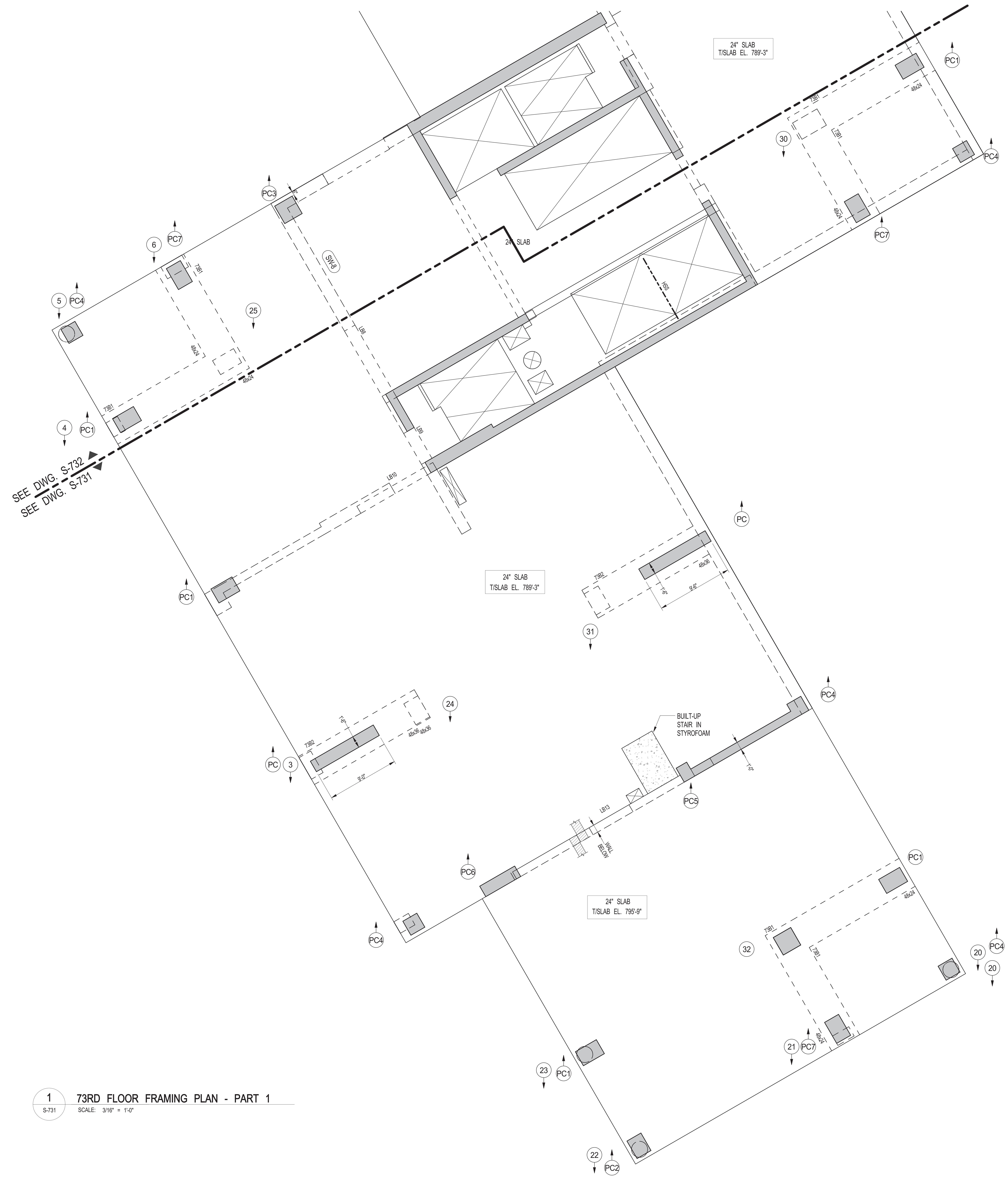

1 S-731 **73RD FLOOR FRAMING PLAN - PART 1**

SCALE: 3/16" = 1'-0"

KEY PLAN:

CHERRY ST

MANHATTAN BRIDGE

SOUTH STREET

FDR DRIVE (ELEVATED)

PROJECT NORTH | TRUE NORTH

DEVELOPER:

EXTELL DEVELOPMENT COMPANY
805 Third Ave, 7th Floor
New York, NY 10022
TEL: 212-712-6000 FAX: 212-712-6100

ARCHITECT OF RECORD:

AAI ARCHITECTS, P.C.
14 Wall Street, 2nd Floor
New York, NY 10005
TEL: 212-964-4040 FAX: 212-964-4090

INTERIOR DESIGNER:

MEYER DAVIS
180 Varick St, suite 404
New York, NY 10014
TEL: 212-627-5574

LANDSCAPE DESIGNER:

WEST 8 URBAN DESIGN & LANDSCAPE ARCHITECTURE P.C.
333 Hudson Street, Suite 905
New York, NY 10013
TEL: 212-285-0088 FAX: 212-285-0228

STRUCTURAL ENGINEERS:

WSP
228 East 45th Street
New York, NY 10017
TEL: 212-687-9888 FAX: 646-487-5501

MEP ENGINEERS:

ICOR ASSOCIATES, LLC
485 C Route 1 South, Suite 200
Iseline, NJ 08830
TEL: 908-272-3300 FAX: 908-272-4440

GEOTECHNICAL ENGINEERS:

LANGAN ENGINEERING & ENVIRONMENTAL SERVICES
21 Penn Plaza - 360 West 31st Street, 8th Floor
New York, NY 10001
TEL: 212.479.5400 FAX: 212.479.5444

No.	DESCRIPTION:	DATE:
1	CONCRETE BID PACKAGE	03-06-15
2	50% CONSTRUCTION DOCUMENTS	04-08-15
3	ADDENDUM #10	07-20-15
4	ISSUED FOR FILING	07-28-15

Discrepancies must be reported immediately to the Architect before proceeding. Only figured dimensions are to be used. Contractors must check all dimensions on site. This drawing is protected by copyright.

ALL DIMENSIONS ARE SHOWN IN IMPERIAL.

CONSULTANT:

WSP

PROJECT:

250 SOUTH STREET
NEW YORK, NY

DRAWING TITLE:

73 ROOF MECH 3 FRAMING PLAN - PART 1

SEAL & SIGNATURE:

STATE OF NEW YORK · AHMAD RAHIMIAN · LICENSED PROFESSIONAL ENGINEER · No. 065537

DATE:	03/06/15
PROJECT No:	1302510
DRAWN: CAD	REV:
CHK: CL	
SCALE: 3/16" = 1'-0"	
DWG No:	**S-731.00**
DOB PAGE No:	of

DOB EMPLOYEE STAMP: | DOB B-SCAN:

Damian Titus
NYC Buildings
APPROVED
Under Directive 2 of 1975
AMENDED APPLICATION
Date: 10/08/2015
NYC Development Hub

FILE NAME:
PLOT DATE:

DEPT OF BLDGS121305639 Job Number
E1512.255367 Scan Code

30" x 42" Arch E1 - SHEET SIZE

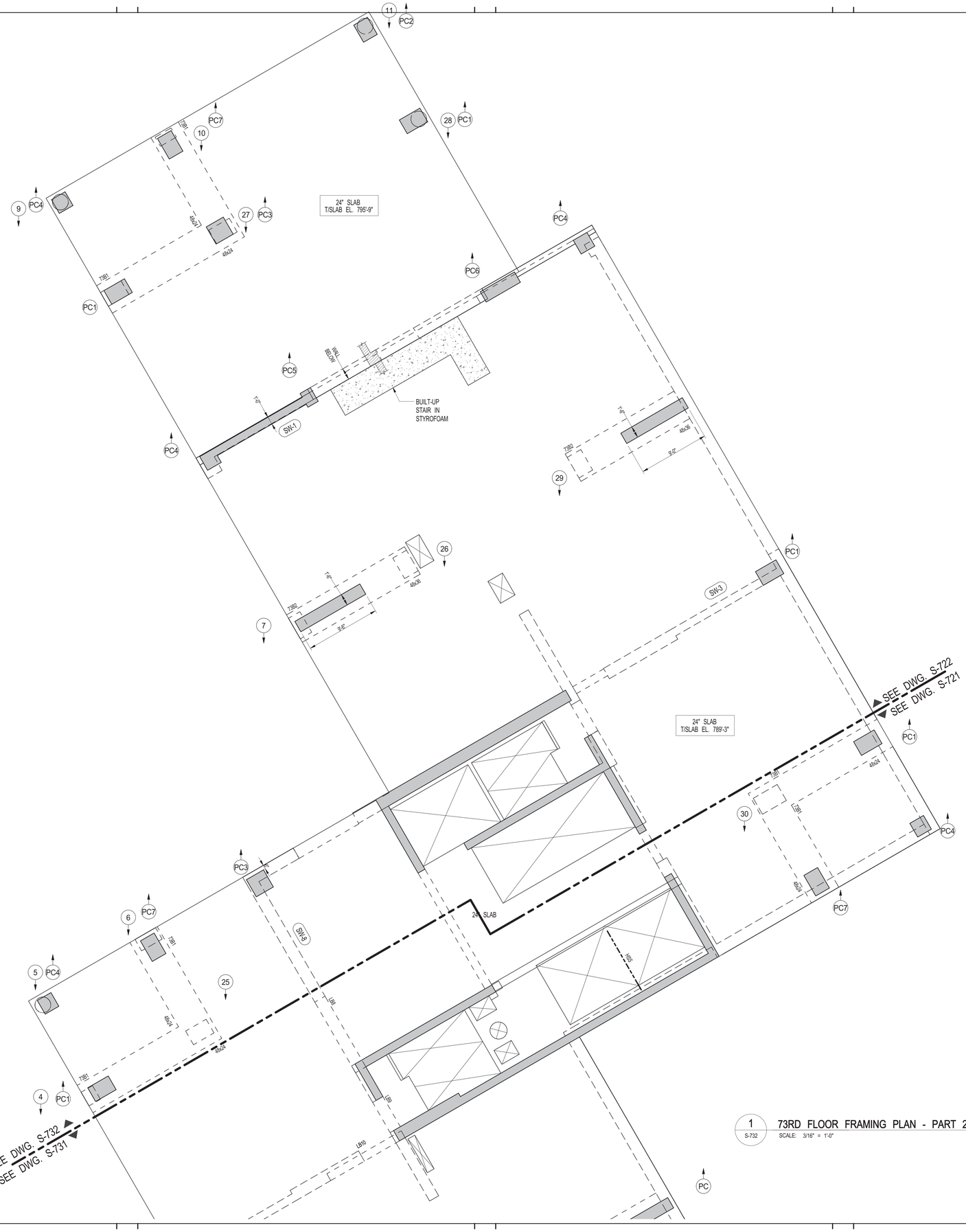

1 S-732 73RD FLOOR FRAMING PLAN - PART 2
SCALE: 3/16" = 1'-0"

KEY PLAN:

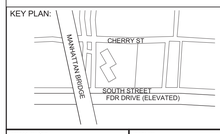

PROJECT NORTH

TRUE NORTH

DEVELOPER:
EXTELL DEVELOPMENT COMPANY
805 Third Ave, 7th Floor
New York, NY 10022
TEL: 212-712-6000 FAX: 212-712-6100

ARCHITECT OF RECORD:
AAI ARCHITECTS, P.C.
14 Wall Street, 2nd Floor
New York, NY 10005
TEL: 212-964-4040 FAX: 212-964-4090

INTERIOR DESIGNER:
MEYER DAVIS
180 Varick St, suite 404
New York, NY 10014
TEL: 212-627-5574

LANDSCAPE DESIGNER:
WEST 8 URBAN DESIGN & LANDSCAPE ARCHITECTURE P.C.
333 Hudson Street, Suite 905
New York, NY 10013
TEL: 212-285-0088 FAX: 212-285-0228

STRUCTURAL ENGINEERS:
WSP
228 East 45th Street
New York, NY 10017
TEL: 212-687-9888 FAX: 646-487-5501

MEP ENGINEERS:
ICOR ASSOCIATES, LLC
485 C Route 1 South, Suite 200
Iseline, NJ 08830
TEL: 908-272-3300 FAX: 908-272-4440

GEOTECHNICAL ENGINEERS:
LANGAN ENGINEERING & ENVIRONMENTAL SERVICES
21 Penn Plaza - 360 West 31st Street, 8th Floor
New York, NY 10001
TEL: 212.479.5400 FAX: 212.479.5444

No.	DESCRIPTION:	DATE:
1	CONCRETE BID PACKAGE	03-06-15
2	50% CONSTRUCTION DOCUMENTS	04-08-15
3	ADDENDUM #10	07-20-15
4	ISSUED FOR FILING	07-28-15

Discrepancies must be reported immediately to the Architect before proceeding. Only figured dimensions are to be used. Contractors must check all dimensions on site. This drawing is protected by copyright.

ALL DIMENSIONS ARE SHOWN IN IMPERIAL.

CONSULTANT:
WSP

PROJECT:
250 SOUTH STREET
NEW YORK, NY

DRAWING TITLE:
73 ROOF MECH 3 FRAMING PLAN - PART 2

SEAL & SIGNATURE:
STATE OF NEW YORK AHMAD RAFIQUE No. 065027 LICENSED PROFESSIONAL ENGINEER

DATE: 03/06/15
PROJECT No: 1302510
DRAWN: CAD REV:
CHK: CL
SCALE: 3/16" = 1'-0"
DWG No: **S-732.00**
DOB PAGE No: of

DOB EMPLOYEE STAMP:
Damian Titus
BuildingsNYC
APPROVED
Under Directive 2 of 1975
AMENDED APPLICATION
Date: 10/08/2015
NYC Development Hub

DOB B-SCAN:

FILE NAME:
PLOT DATE:

DEPT OF BLDGS121185539 Job Number
E1578892584 Scan Code

30" x 42" Arch E1 - SHEET SIZE

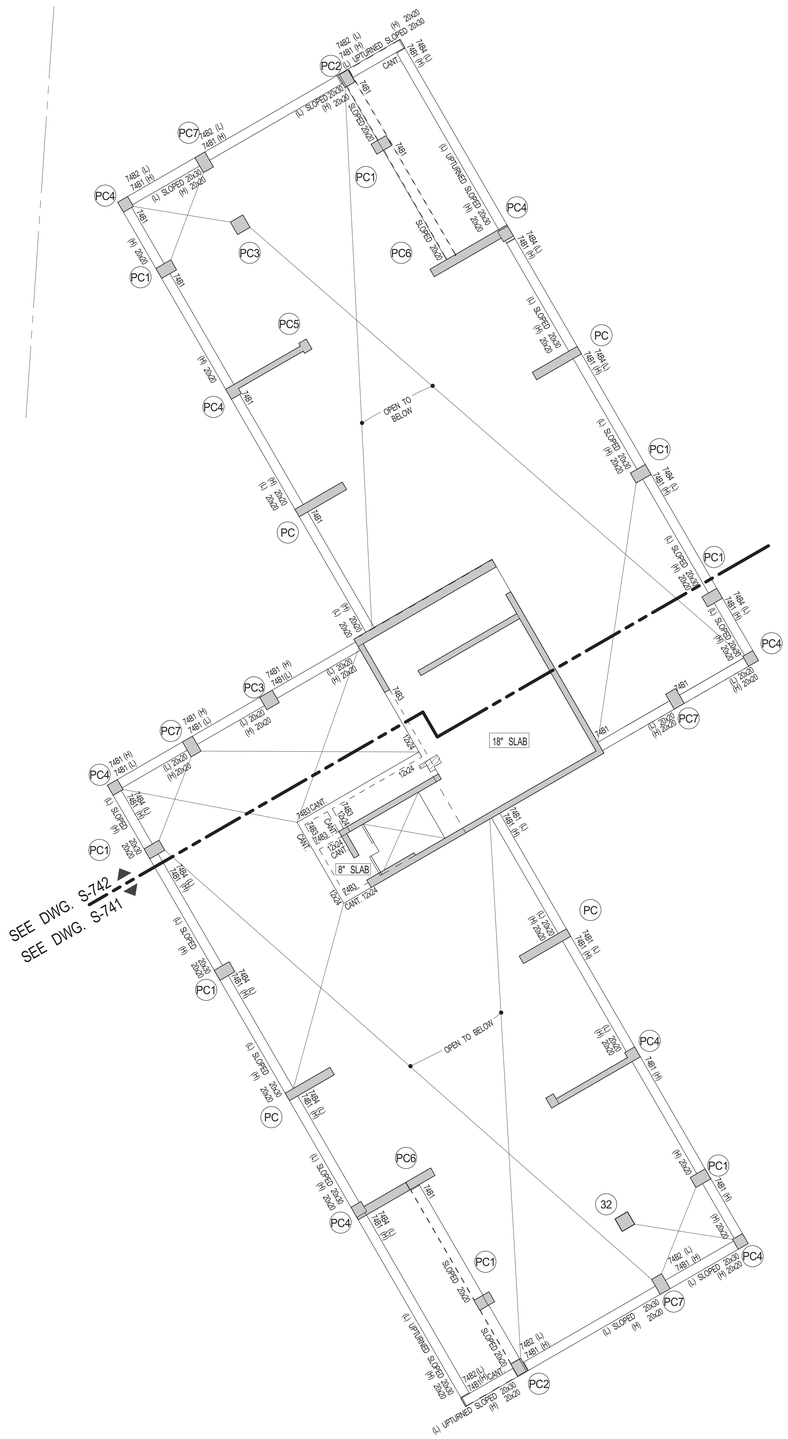

1 S-740 MECHANICAL ROOM ROOF FRAMING PLAN

SCALE: 3/32" = 1'-0"

NOTES:

1. TOP OF SLAB ELEVATION TO BE +804'-1" U.O.N. ON PLAN
2. SLAB TO BE 18" THICK U.O.N.
3. SLAB REINFORCEMENT TO BE: #5@12 T&B FOR 8" SLAB,
   #6@12 T&B E.W FOR 18" SLAB
4. ⟷ INDICATES ONE WAY SLAB W/#5@12 T&B
5. FOR BALANCE OF NOTES SEE DRAWING S-010.

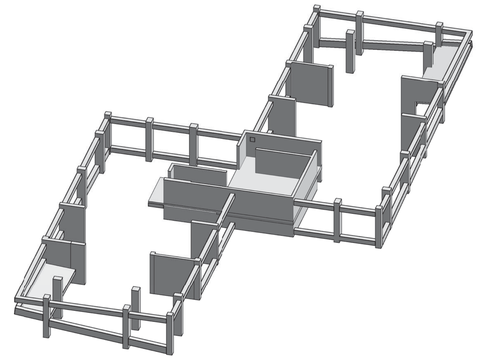

2 S-740 3D VIEW-MECHANICAL ROOM ROOF FRAMING PLAN

SCALE:

74TH FLOOR BEAM SCHEDULE

BEAM MARK	SIZE WIDTH	SIZE DEPTH	REINFORCEMENT BOTTOM CONTINUOUS	REINFORCEMENT TOP CONTINUOUS	REINFORCEMENT TOP ADD'L BARS AT SUPPORT	STIRRUPS TYPE	STIRRUPS SIZE	STIRRUPS SPACING	REMARKS
74B1	20	20	3-#10	3-#10		1	#4	@8	ADD'L 4-#8 CONT.E.F.
74B2	20	30	6-#11	6-#11		1	#4	@8	ADD'L 4-#8 CONT.E.F. CANT.
74B3	12	24	3-#10	3-#10		1	#4	@6	CANT
74B4	20	30	4-#11	4-#11		1	#4	@10	ADD'L 4-#8 CONT.E.F.

TYPE 1

KEY PLAN:

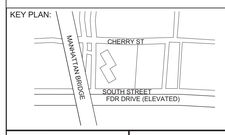

PROJECT NORTH

TRUE NORTH

DEVELOPER:
EXTELL DEVELOPMENT COMPANY
805 Third Ave, 7th Floor
New York, NY 10022
TEL: 212-712-6000 FAX: 212-712-6100

ARCHITECT OF RECORD:
AAI ARCHITECTS, P.C.
14 Wall Street, 2nd Floor
New York, NY 10005
TEL: 212-964-4040 FAX: 212-964-4090

INTERIOR DESIGNER:
MEYER DAVIS
180 Varick St, suite 404
New York, NY 10014
TEL: 212-627-5574

LANDSCAPE DESIGNER:
WEST 8 URBAN DESIGN & LANDSCAPE ARCHITECTURE P.C.
333 Hudson Street, Suite 905
New York, NY 10013
TEL: 212-285-0088 FAX: 212-285-0228

STRUCTURAL ENGINEERS:
WSP
228 East 45th Street
New York, NY 10017
TEL: 212-687-9888 FAX: 646-487-5501

MEP ENGINEERS:
ICOR ASSOCIATES, LLC
485 C Route 1 South, Suite 200
Iseline, NJ 08830
TEL: 908-272-3300 FAX: 908-272-4440

GEOTECHNICAL ENGINEERS:
LANGAN ENGINEERING & ENVIRONMENTAL SERVICES
21 Penn Plaza - 360 West 31st Street, 8th Floor
New York, NY 10001
TEL: 212.479.5400 FAX: 212.479.5444

No.	DESCRIPTION:	DATE:
1	CONCRETE BID PACKAGE	03-06-15
2	50% CONSTRUCTION DOCUMENTS	04-08-15
3	ADDENDUM #10	07-20-15
4	ISSUED FOR FILING	07-28-15

Discrepancies must be reported immediately to the Architect before proceeding. Only figured dimensions are to be used. Contractors must check all dimensions on site. This drawing is protected by copyright.

ALL DIMENSIONS ARE SHOWN IN IMPERIAL.

CONSULTANT: WSP

PROJECT:
250 SOUTH STREET
NEW YORK, NY

DRAWING TITLE:
74 TH EMR- MECH 4 OVERALL FRAMING PLAN

SEAL & SIGNATURE:

DATE:	09/26/14
PROJECT No:	1302510
DRAWN: CAD	REV:
CHK: CL	
SCALE:	
DWG No:	**S-740.01**
DOB PAGE No:	of

DOB EMPLOYEE STAMP:

DOB B-SCAN:

FILE NAME:
PLOT DATE:

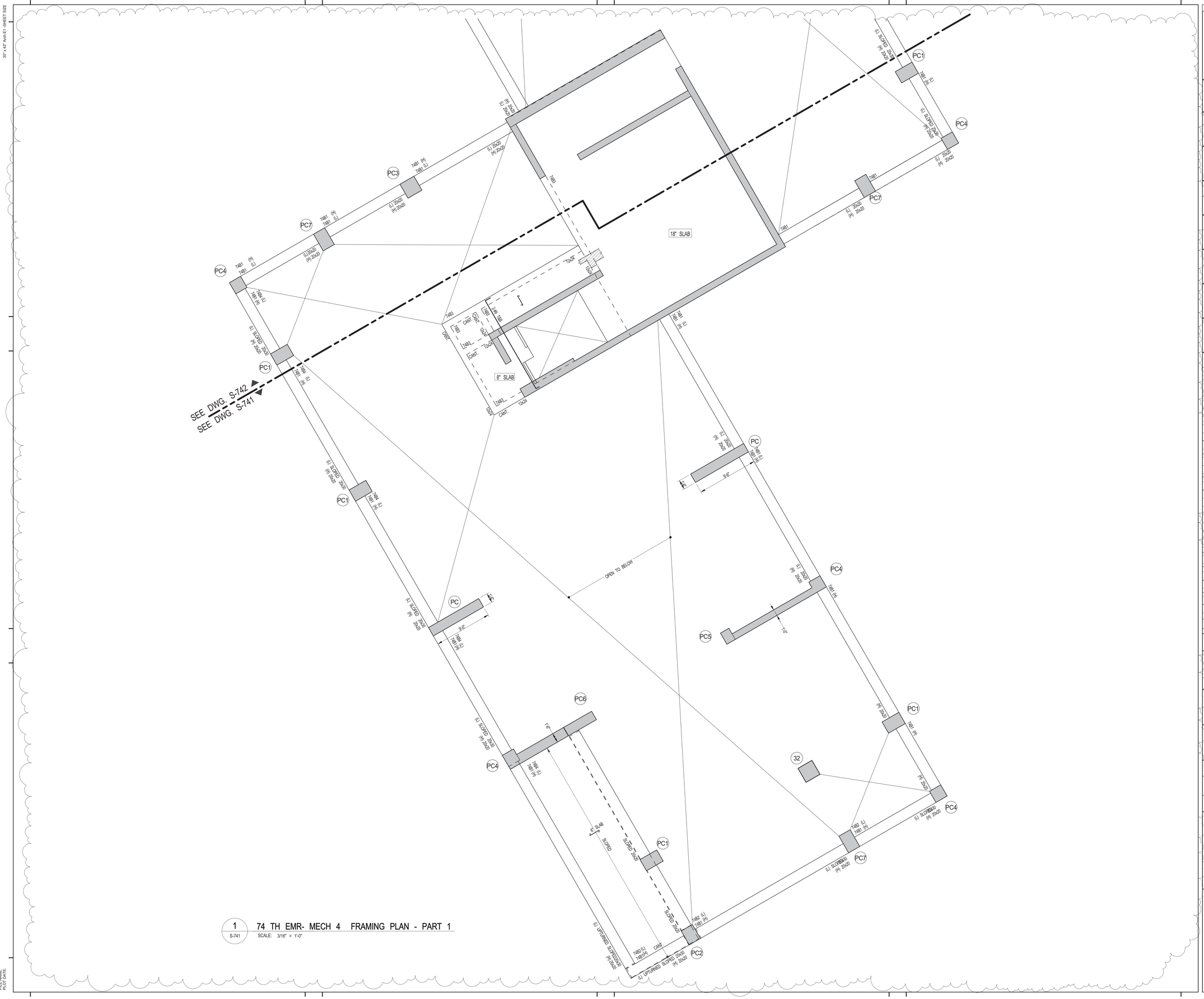

1 S-741 74 TH EMR- MECH 4 FRAMING PLAN - PART 1
SCALE: 3/16" = 1'-0"

KEY PLAN:

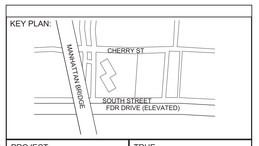

PROJECT NORTH

TRUE NORTH

DEVELOPER:
EXTELL DEVELOPMENT COMPANY
805 Third Ave, 7th Floor
New York, NY 10022
TEL: 212-712-6000 FAX: 212-712-6100

ARCHITECT OF RECORD:
AAI ARCHITECTS, P.C.
14 Wall Street, 2nd Floor
New York, NY 10005
TEL: 212-964-4040 FAX: 212-964-4090

INTERIOR DESIGNER:
MEYER DAVIS
180 Varick St, suite 404
New York, NY 10014
TEL: 212-627-5574

LANDSCAPE DESIGNER:
WEST 8 URBAN DESIGN & LANDSCAPE ARCHITECTURE P.C.
333 Hudson Street, Suite 905
New York, NY 10013
TEL: 212-285-0088 FAX: 212-285-0228

STRUCTURAL ENGINEERS:
WSP
228 East 45th Street
New York, NY 10017
TEL: 212-687-9888 FAX: 646-487-5501

MEP ENGINEERS:
ICOR ASSOCIATES, LLC
485 C Route 1 South, Suite 200
Iseline, NJ 08830
TEL: 908-272-3300 FAX: 908-272-4440

GEOTECHNICAL ENGINEERS:
LANGAN ENGINEERING & ENVIRONMENTAL SERVICES
21 Penn Plaza - 360 West 31st Street, 8th Floor
New York, NY 10001
TEL: 212.479.5400 FAX: 212.479.5444

No.	DESCRIPTION:	DATE:
1	CONCRETE BID PACKAGE	03-06-15
2	50% CONSTRUCTION DOCUMENTS	04-08-15
3	ADDENDUM #10	07-20-15
4	ISSUED FOR FILING	07-28-15

Discrepancies must be reported immediately to the Architect before proceeding. Only figured dimensions are to be used. Contractors must check all dimensions on site. This drawing is protected by copyright.

ALL DIMENSIONS ARE SHOWN IN IMPERIAL.

CONSULTANT:
WSP

PROJECT:
250 SOUTH STREET
NEW YORK, NY

DRAWING TITLE:
74 TH EMR- MECH 4 FRAMING PLAN - PART 1

SEAL & SIGNATURE:
STATE OF NEW YORK
AHMAD RAHIMIAN
No. 065537
LICENSED PROFESSIONAL ENGINEER

DATE:	03/06/15
PROJECT No:	1302510
DRAWN: CAD	REV:
CHK: CL	
SCALE: 3/16" = 1'-0"	
DWG No:	S-741.01
DOB PAGE No:	of

DOB EMPLOYEE STAMP:
Damian Titus
Buildings
APPROVED
Under Directive 2 of 1975
AMENDED APPLICATION
Date: 10/08/2015
NYC Development Hub

DOB B-SCAN:

DEPT OF BLDGS121185539 Job Number
E1317195513 Scan Code
30" x 42" Arch E1 - SHEET SIZE

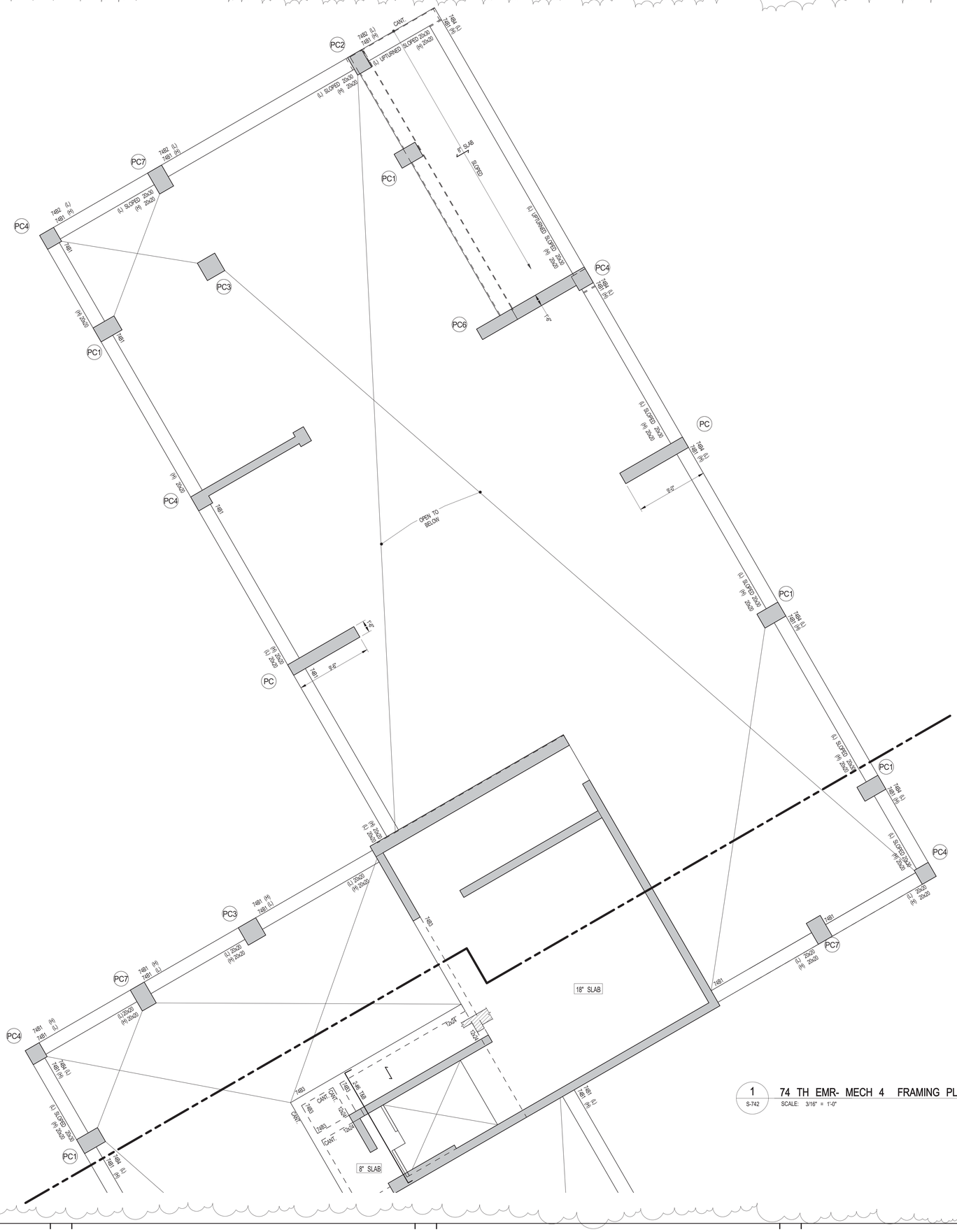

1 S-742 — 74 TH EMR- MECH 4 FRAMING PLAN - PART 2
SCALE: 3/16" = 1'-0"

KEY PLAN:

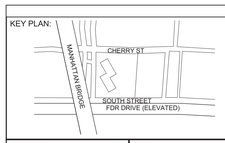

PROJECT NORTH

TRUE NORTH

DEVELOPER:
EXTELL DEVELOPMENT COMPANY
805 Third Ave, 7th Floor
New York, NY 10022
TEL: 212-712-6000 FAX: 212-712-6100

ARCHITECT OF RECORD:
AAI ARCHITECTS, P.C.
14 Wall Street, 2nd Floor
New York, NY 10005
TEL: 212-964-4040 FAX: 212-964-4090

INTERIOR DESIGNER:
MEYER DAVIS
180 Varick St, suite 404
New York, NY 10014
TEL: 212-627-5574

LANDSCAPE DESIGNER:
WEST 8 URBAN DESIGN & LANDSCAPE ARCHITECTURE P.C.
333 Hudson Street, Suite 905
New York, NY 10013
TEL: 212-285-0088 FAX: 212-285-0228

STRUCTURAL ENGINEERS:
WSP
228 East 45th Street
New York, NY 10017
TEL: 212-687-9888 FAX: 646-487-5501

MEP ENGINEERS:
ICOR ASSOCIATES, LLC
485 C Route 1 South, Suite 200
Iseline, NJ 08830
TEL: 908-272-3300 FAX: 908-272-4440

GEOTECHNICAL ENGINEERS:
LANGAN ENGINEERING & ENVIRONMENTAL SERVICES
21 Penn Plaza - 360 West 31st Street, 8th Floor
New York, NY 10001
TEL: 212.479.5400 FAX: 212.479.5444

No.	DESCRIPTION:	DATE:
1	CONCRETE BID PACKAGE	03-06-15
2	50% CONSTRUCTION DOCUMENTS	04-08-15
3	ADDENDUM #10	07-20-15
4	ISSUED FOR FILING	07-28-15

Discrepancies must be reported immediately to the Architect before proceeding. Only figured dimensions are to be used. Contractors must check all dimensions on site. This drawing is protected by copyright.

ALL DIMENSIONS ARE SHOWN IN IMPERIAL.

CONSULTANT:
WSP

PROJECT:
250 SOUTH STREET
NEW YORK, NY

DRAWING TITLE:
74 TH EMR- MECH 4 FRAMING PLAN - PART 2

SEAL & SIGNATURE:
STATE OF NEW YORK · ANMAD RAHIMIAN · No. 085551 · LICENSED PROFESSIONAL ENGINEER

DATE:	03/06/15
PROJECT No:	1302510
DRAWN: CAD	REV:
CHK: CL	
SCALE: 3/16" = 1'-0"	
DWG No:	**S-742.01**
DOB PAGE No:	of

DOB EMPLOYEE STAMP:
Damian Titus
NYC Buildings
APPROVED
Under Directive 2 of 1975
AMENDED APPLICATION
Date: 10/08/2015
NYC Development Hub

DOB B-SCAN:

FILE NAME:
PLOT DATE:

DEPT OF BLDGS121185539 Job Number
E324570/0047 Scan Code

30" x 42" Arch E1 - SHEET SIZE

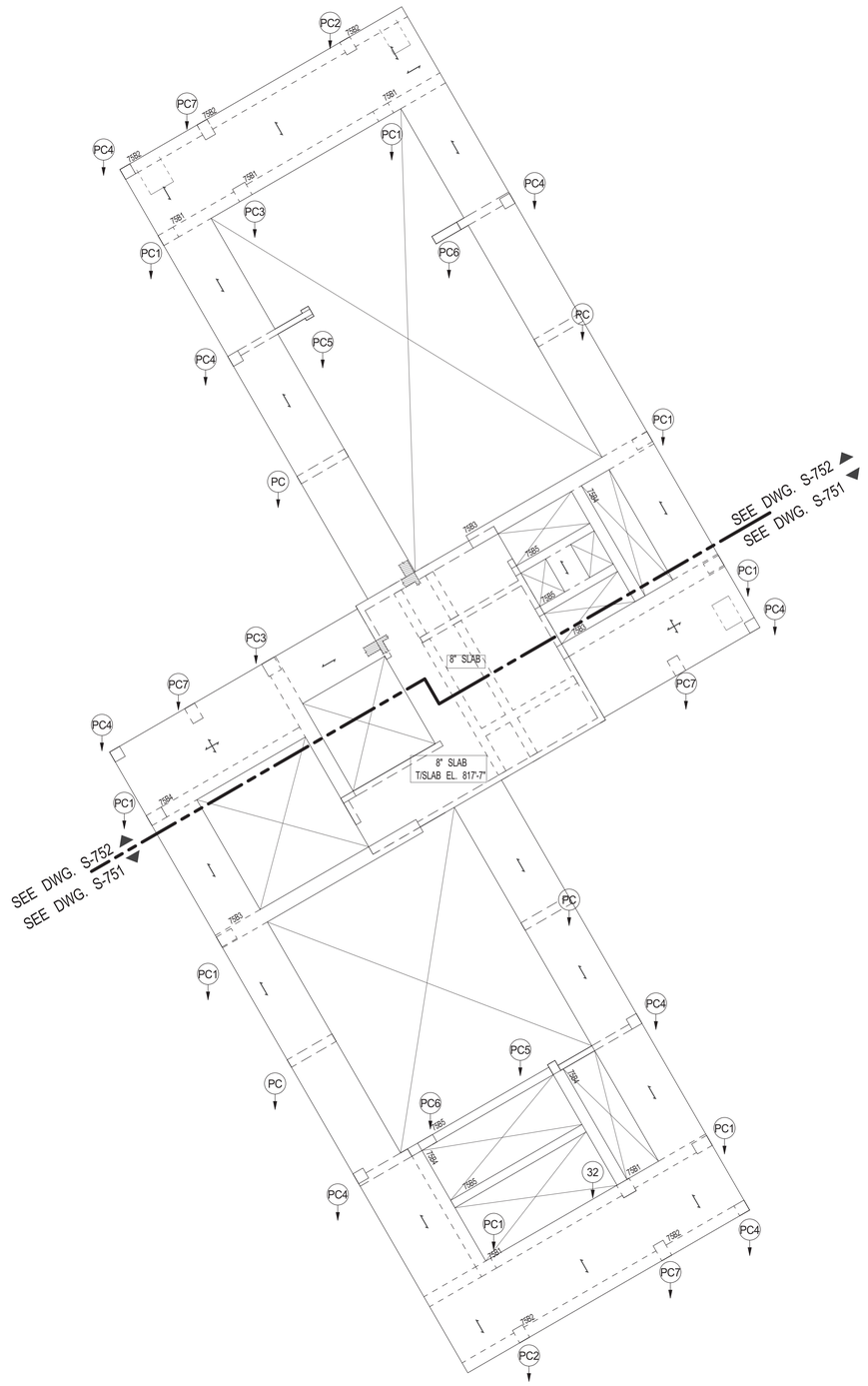

1 T.O BULKHEAD OVERALL FRAMING PLAN (75TH FL.)

3/32" = 1'-0"

NOTES:

1. BOTTOM SLAB REINFORCEMENT TO BE #5@12 E.W. FOR 12" SLAB

INDICATES 20" ONE WAY SLAB W/#9@6 TOP&BOTT W/#7@12 OC. T&B AT OTHER DIRECTION U.O.N.

INDICATES 20" TWO WAY SLAB W/#9@12 TOP&BOTT. EACH WAY

BULKHEAD BEAM SCHEDULE

BEAM MARK	SIZE WIDTH	SIZE DEPTH	REINFORCEMENT BOTTOM CONTINUOUS	REINFORCEMENT TOP CONTINUOUS	REINFORCEMENT TOP ADD'L BARS AT SUPPORT	STIRRUPS TYPE	STIRRUPS SIZE	STIRRUPS SPACING	REMARKS
75B1	24	36	8-#11	10-#11		1	#4	@8	#8@6 EF. CONT / CANT
75B2	24	36	8-#11	8-#11		1	#4	@8	#8@6 EF. CONT / CANT
75B3	30	42	8-#11	4-#11		2	#4	@10	#8@6 EF. CONT
75B4	24	36	6-#11	4-#11		1	#4	@10	#8@6 EF. CONT
75B5	18	24	4-#10	4-#10		1	#4	@10	#8@6 EF. CONT

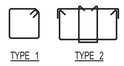

KEY PLAN:

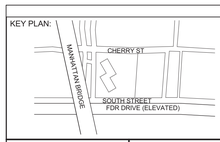

PROJECT NORTH

TRUE NORTH

DEVELOPER:
EXTELL DEVELOPMENT COMPANY
805 Third Ave, 7th Floor
New York, NY 10022
TEL: 212-712-6000 FAX: 212-712-6100

ARCHITECT OF RECORD:
AAI ARCHITECTS, P.C.
14 Wall Street, 2nd Floor
New York, NY 10005
TEL: 212-964-4040 FAX: 212-964-4090

INTERIOR DESIGNER:
MEYER DAVIS
180 Varick St, suite 404
New York, NY 10014
TEL: 212-627-5574

LANDSCAPE DESIGNER:
WEST 8 URBAN DESIGN & LANDSCAPE ARCHITECTURE P.C.
333 Hudson Street, Suite 905
New York, NY 10013
TEL: 212-285-0088 FAX: 212-285-0228

STRUCTURAL ENGINEERS:
WSP
228 East 45th Street
New York, NY 10017
TEL: 212-687-9888 FAX: 646-487-5501

MEP ENGINEERS:
ICOR ASSOCIATES, LLC
485 C Route 1 South, Suite 200
Iseline, NJ 08830
TEL: 908-272-3300 FAX: 908-272-4440

GEOTECHNICAL ENGINEERS:
LANGAN ENGINEERING & ENVIRONMENTAL SERVICES
21 Penn Plaza - 360 West 31st Street, 8th Floor
New York, NY 10001
TEL: 212.479.5400 FAX: 212.479.5444

No.	DESCRIPTION:	DATE:
1	CONCRETE BID PACKAGE	03-06-15
2	50% CONSTRUCTION DOCUMENTS	04-08-15
3	ADDENDUM #10	07-20-15
4	ISSUED FOR FILING	07-28-15

Discrepancies must be reported immediately to the Architect before proceeding. Only figured dimensions are to be used. Contractors must check all dimensions on site. This drawing is protected by copyright.

ALL DIMENSIONS ARE SHOWN IN IMPERIAL.

CONSULTANT: WSP

PROJECT:
250 SOUTH STREET
NEW YORK, NY

DRAWING TITLE:
T.O BULKHEAD OVERALL FRAMING PLAN (75TH FL.)

SEAL & SIGNATURE:

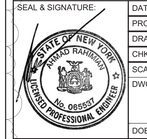

DATE:	03/06/15
PROJECT No:	1302510
DRAWN: CAD	REV:
CHK: CL	
SCALE: As indicated	
DWG No:	**S-750.01**
DOB PAGE No: of	

DOB EMPLOYEE STAMP:

Damian Titus
NYC Buildings
APPROVED
Under Directive 2 of 1975
AMENDED APPLICATION
Date: 10/08/2015
NYC Development Hub

DOB B-SCAN:

FILE NAME:
PLOT DATE:

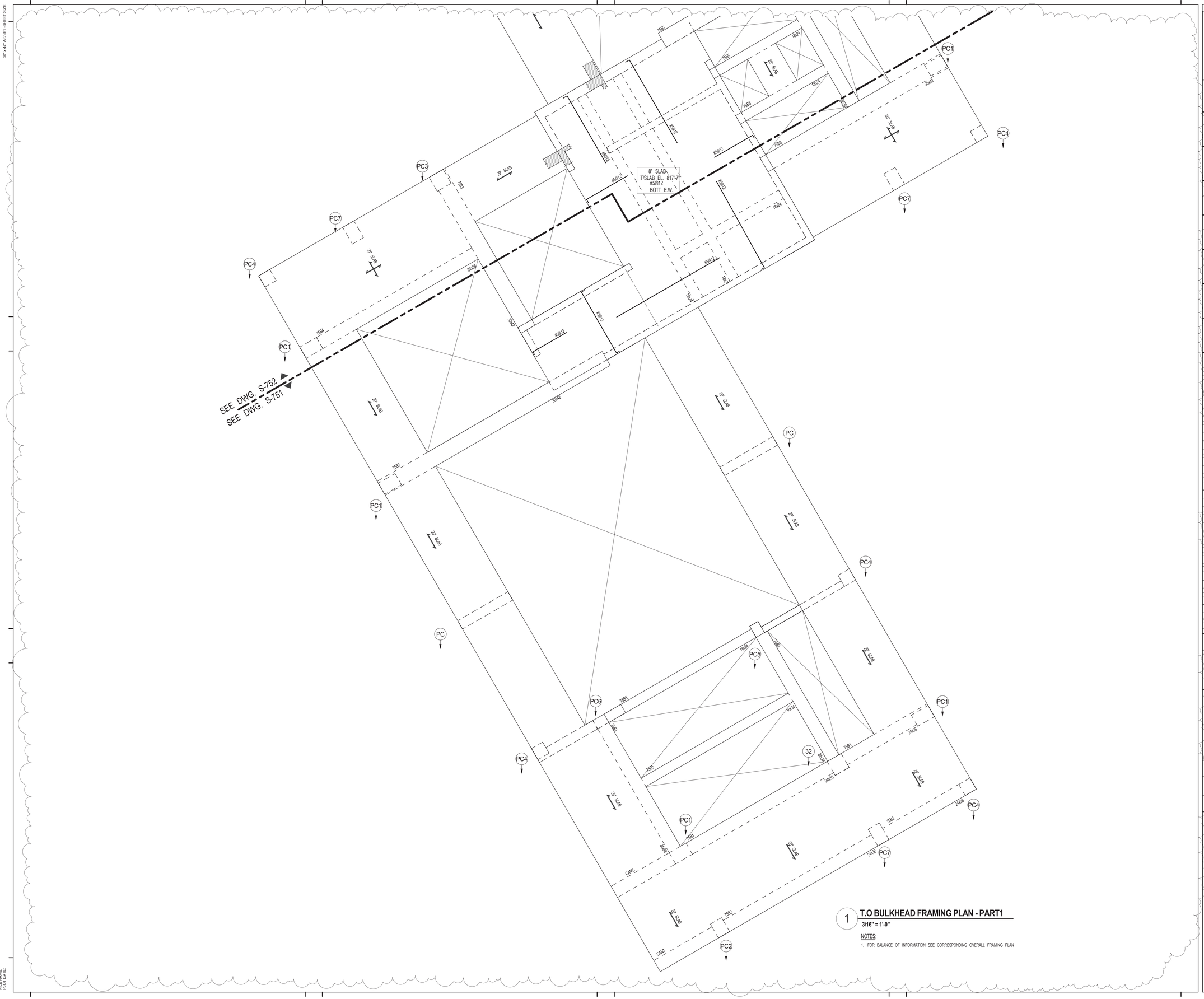

1 **T.O BULKHEAD FRAMING PLAN - PART1**

3/16" = 1'-0"

NOTES:

1. FOR BALANCE OF INFORMATION SEE CORRESPONDING OVERALL FRAMING PLAN

KEY PLAN:

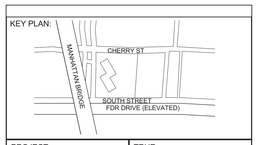

PROJECT NORTH

TRUE NORTH

DEVELOPER:
EXTELL DEVELOPMENT COMPANY
805 Third Ave, 7th Floor
New York, NY 10022
TEL: 212-712-6000 FAX: 212-712-6100

ARCHITECT OF RECORD:
AAI ARCHITECTS, P.C.
14 Wall Street, 2nd Floor
New York, NY 10005
TEL: 212-964-4040 FAX: 212-964-4090

INTERIOR DESIGNER:
MEYER DAVIS
180 Varick St, suite 404
New York, NY 10014
TEL: 212-627-5574

LANDSCAPE DESIGNER:
WEST 8 URBAN DESIGN & LANDSCAPE ARCHITECTURE P.C.
333 Hudson Street, Suite 905
New York, NY 10013
TEL: 212-285-0088 FAX: 212-285-0228

STRUCTURAL ENGINEERS:
WSP
228 East 45th Street
New York, NY 10017
TEL: 212-687-9888 FAX: 646-487-5501

MEP ENGINEERS:
ICOR ASSOCIATES, LLC
485 C Route 1 South, Suite 200
Iseline, NJ 08830
TEL: 908-272-3300 FAX: 908-272-4440

GEOTECHNICAL ENGINEERS:
LANGAN ENGINEERING & ENVIRONMENTAL SERVICES
21 Penn Plaza - 360 West 31st Street, 8th Floor
New York, NY 10001
TEL: 212.479.5400 FAX: 212.479.5444

No.	DESCRIPTION:	DATE:
1	CONCRETE BID PACKAGE	03-06-15
2	50% CONSTRUCTION DOCUMENTS	04-08-15
3	ADDENDUM #10	07-20-15
4	ISSUED FOR FILING	07-28-15

Discrepancies must be reported immediately to the Architect before proceeding. Only figured dimensions are to be used. Contractors must check all dimensions on site. This drawing is protected by copyright.

ALL DIMENSIONS ARE SHOWN IN IMPERIAL.

CONSULTANT:
WSP

PROJECT:
250 SOUTH STREET
NEW YORK, NY

DRAWING TITLE:
T.O BULKHEAD FRAMING PLAN - PART1

SEAL & SIGNATURE:
STATE OF NEW YORK
AHMAD RAHIMIAN
No. 065537
LICENSED PROFESSIONAL ENGINEER

DATE:	03/06/15
PROJECT No:	1302510
DRAWN: CAD	REV:
CHK: CL	
SCALE: As indicated	
DWG No:	S-751.01
DOB PAGE No:	of

DOB EMPLOYEE STAMP:
Damian Titus
Buildings
APPROVED
Under Directive 2 of 1975
AMENDED APPLICATION
Date: 10/08/2015
NYC Development Hub

DOB B-SCAN:

30" x 42" Arch E1 - SHEET SIZE

FILE NAME:
PLOT DATE:

DEPT OF BLDGS 121185528 Job Number
ES635316126 Scan Code

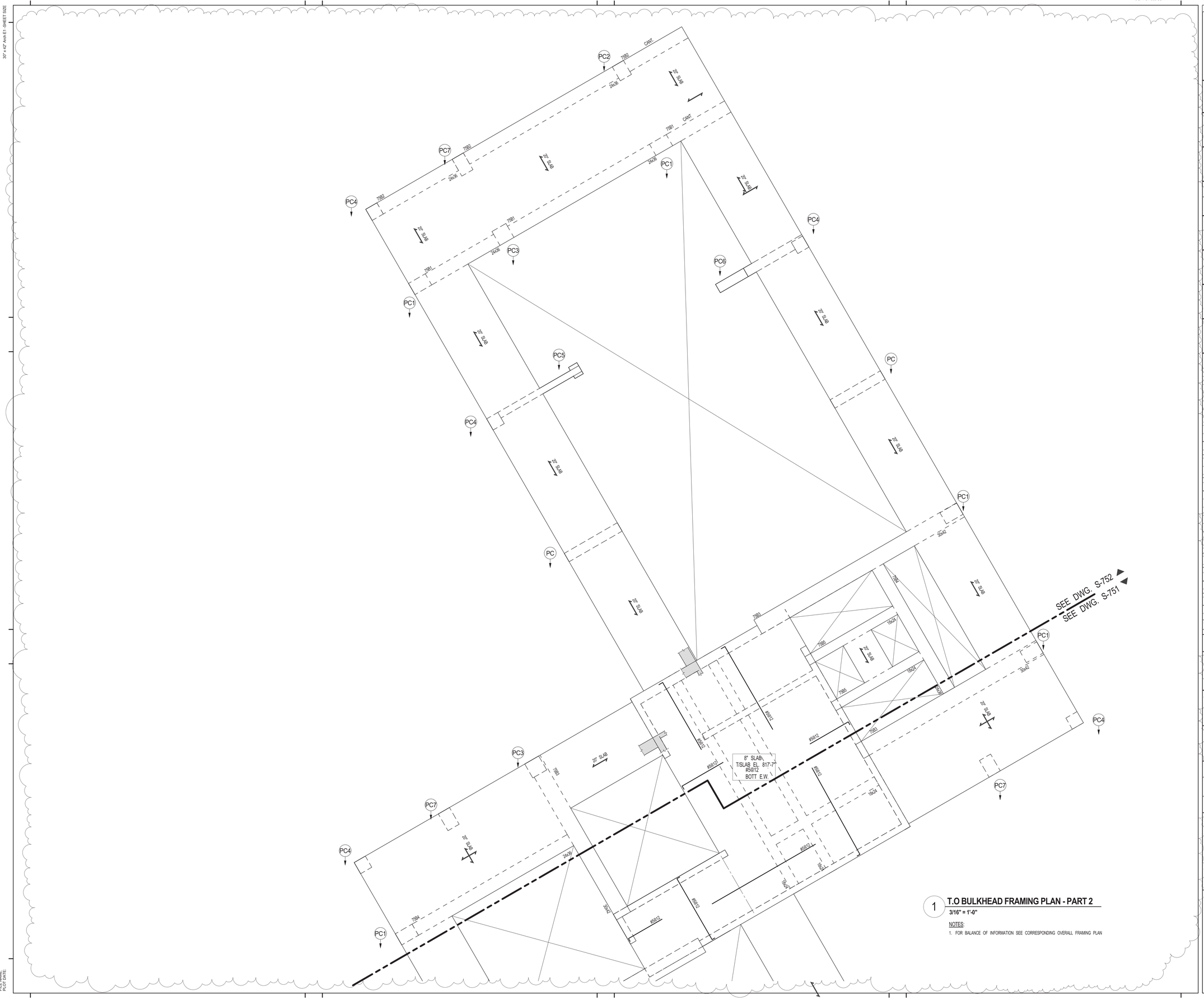

1 **T.O BULKHEAD FRAMING PLAN - PART 2**

3/16" = 1'-0"

NOTES:

1. FOR BALANCE OF INFORMATION SEE CORRESPONDING OVERALL FRAMING PLAN

KEY PLAN:

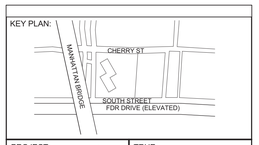

PROJECT NORTH

TRUE NORTH

DEVELOPER:
EXTELL DEVELOPMENT COMPANY
805 Third Ave, 7th Floor
New York, NY 10022
TEL: 212-712-6000 FAX: 212-712-6100

ARCHITECT OF RECORD:
AAI ARCHITECTS, P.C.
14 Wall Street, 2nd Floor
New York, NY 10005
TEL: 212-964-4040 FAX: 212-964-4090

INTERIOR DESIGNER:
MEYER DAVIS
180 Varick St, suite 404
New York, NY 10014
TEL: 212-627-5574

LANDSCAPE DESIGNER:
WEST 8 URBAN DESIGN & LANDSCAPE ARCHITECTURE P.C.
333 Hudson Street, Suite 905
New York, NY 10013
TEL: 212-285-0088 FAX: 212-285-0228

STRUCTURAL ENGINEERS:
WSP
228 East 45th Street
New York, NY 10017
TEL: 212-687-9888 FAX: 646-487-5501

MEP ENGINEERS:
ICOR ASSOCIATES, LLC
485 C Route 1 South, Suite 200
Iseline, NJ 08830
TEL: 908-272-3300 FAX: 908-272-4440

GEOTECHNICAL ENGINEERS:
LANGAN ENGINEERING & ENVIRONMENTAL SERVICES
21 Penn Plaza - 360 West 31st Street, 8th Floor
New York, NY 10001
TEL: 212.479.5400 FAX: 212.479.5444

No.	DESCRIPTION:	DATE:
1	CONCRETE BID PACKAGE	03-06-15
2	50% CONSTRUCTION DOCUMENTS	04-08-15
3	ADDENDUM #10	07-20-15
4	ISSUED FOR FILING	07-28-15

Discrepancies must be reported immediately to the Architect before proceeding. Only figured dimensions are to be used. Contractors must check all dimensions on site. This drawing is protected by copyright.

ALL DIMENSIONS ARE SHOWN IN IMPERIAL.

CONSULTANT:
WSP

PROJECT:
250 SOUTH STREET
NEW YORK, NY

DRAWING TITLE:
T.O BULKHEAD FRAMING PLAN - PART 2

SEAL & SIGNATURE:
STATE OF NEW YORK
AHMAD RAHIMIAN
No. 065537
LICENSED PROFESSIONAL ENGINEER

DATE:	03/06/15
PROJECT No:	1302510
DRAWN: CAD	REV:
CHK: CL	
SCALE: As indicated	
DWG No:	S-752.01
DOB PAGE No:	of

DOB EMPLOYEE STAMP:
Damian Titus
NYC Buildings
APPROVED
Under Directive 2 of 1975
AMENDED APPLICATION
Date: 10/08/2015
NYC Development Hub

DOB B-SCAN:

30" x 42" Arch E1 - SHEET SIZE

FILE NAME:
PLOT DATE:

DEPT OF BLDGS121185928 Job Number
E50471855093 Scan Code
30" x 42" Arch E1 - SHEET SIZE

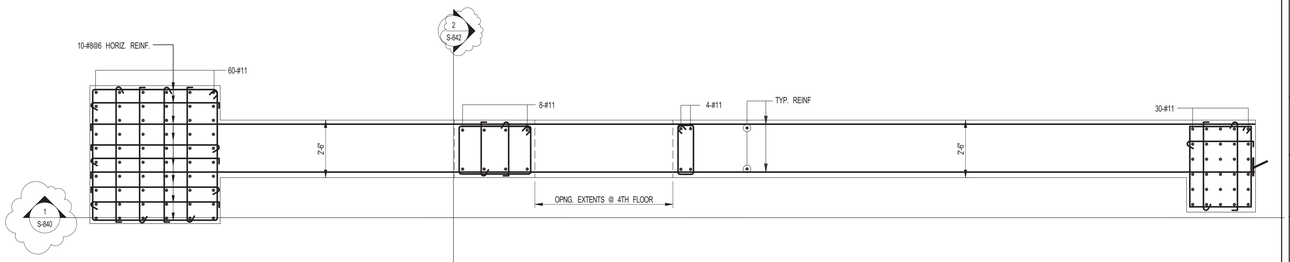

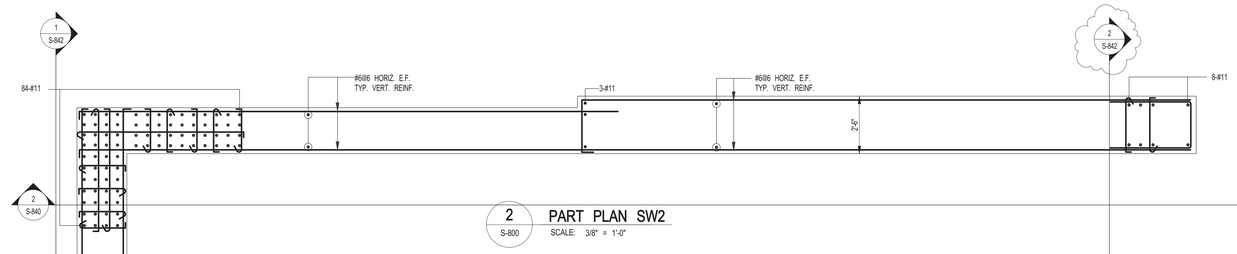

2 S-800 PART PLAN SW2
SCALE: 3/8" = 1'-0"

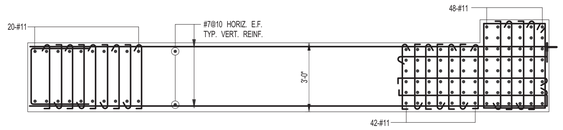

3 S-800 PART PLAN SW3
SCALE: 3/8" = 1'-0"

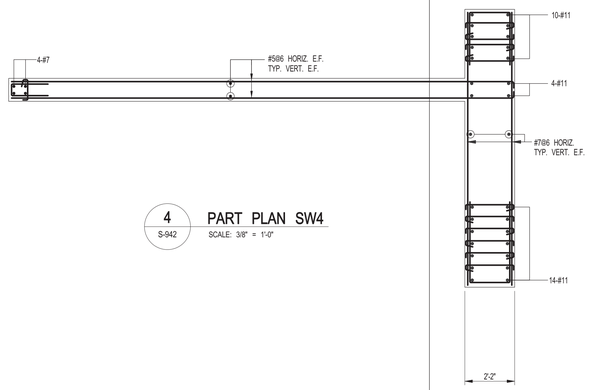

4 S-942 PART PLAN SW4
SCALE: 3/8" = 1'-0"

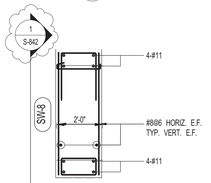

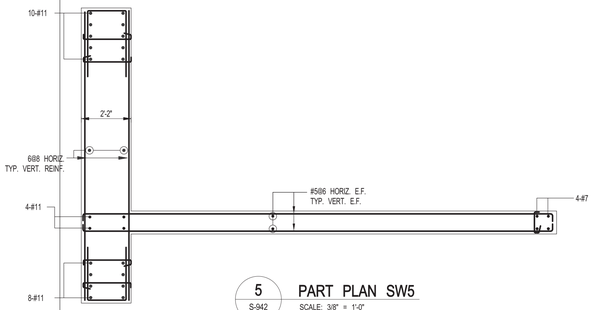

5 S-942 PART PLAN SW5
SCALE: 3/8" = 1'-0"

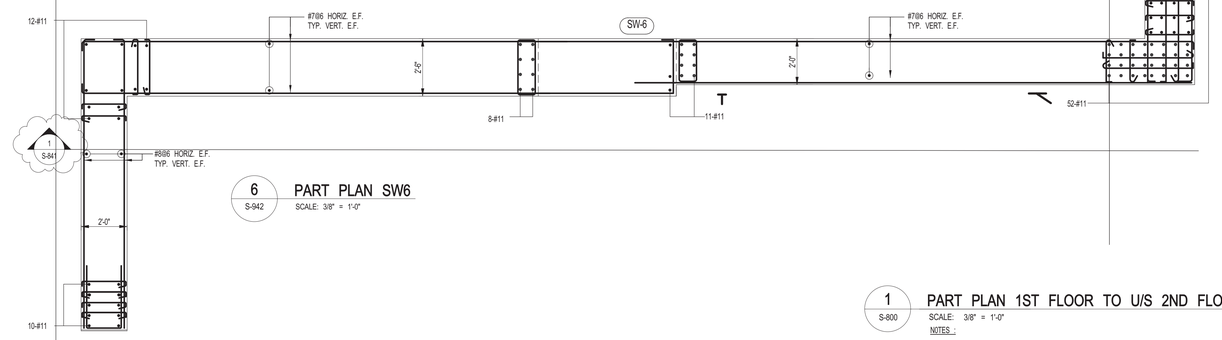

6 S-942 PART PLAN SW6
SCALE: 3/8" = 1'-0"

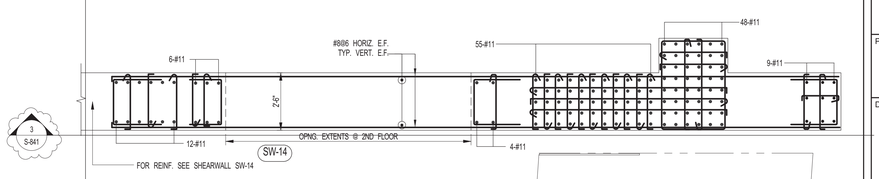

5 S-800 PART PLAN SW9
SCALE: 3/8" = 1'-0"

1 S-800 PART PLAN 1ST FLOOR TO U/S 2ND FLOOR SHEARWALL DETAILS
SCALE: 3/8" = 1'-0"

NOTES :

1. FOR NOTES SEE DRAWING S-940

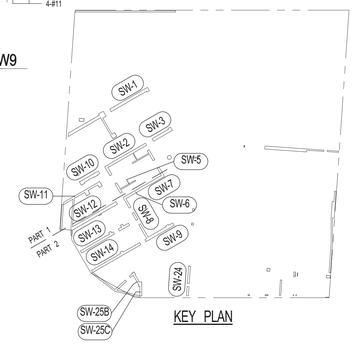

KEY PLAN

KEY PLAN:

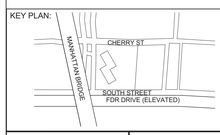

PROJECT NORTH

TRUE NORTH

DEVELOPER:
EXTELL DEVELOPMENT COMPANY
805 Third Ave, 7th Floor
New York, NY 10022
TEL: 212-712-6000 FAX: 212-712-6100

ARCHITECT OF RECORD:
AAI ARCHITECTS, P.C.
14 Wall Street, 2nd Floor
New York, NY 10005
TEL: 212-964-4040 FAX: 212-964-4090

INTERIOR DESIGNER:
MEYER DAVIS
180 Varick St, suite 404
New York, NY 10014
TEL: 212-627-5574

LANDSCAPE DESIGNER:
WEST 8 URBAN DESIGN & LANDSCAPE ARCHITECTURE P.C.
333 Hudson Street, Suite 905
New York, NY 10013
TEL: 212-285-0088 FAX: 212-285-0228

STRUCTURAL ENGINEERS:
WSP
228 East 45th Street
New York, NY 10017
TEL: 212-687-9888 FAX: 646-487-5501

MEP ENGINEERS:
ICOR ASSOCIATES, LLC
485 C Route 1 South, Suite 200
Iseline, NJ 08830
TEL: 908-272-3300 FAX: 908-272-4440

GEOTECHNICAL ENGINEERS:
LANGAN ENGINEERING & ENVIRONMENTAL SERVICES
21 Penn Plaza - 360 West 31st Street, 8th Floor
New York, NY 10001
TEL: 212.479.5400 FAX: 212.479.5444

No.	DESCRIPTION:	DATE:
1	CONCRETE BID PACKAGE	03-06-15
2	ISSUED FOR FILING	07-28-15

Discrepancies must be reported immediately to the Architect before proceeding. Only figured dimensions are to be used. Contractors must check all dimensions on site. This drawing is protected by copyright.

ALL DIMENSIONS ARE SHOWN IN IMPERIAL.

CONSULTANT:
WSP

PROJECT:
250 SOUTH STREET
NEW YORK, NY

DRAWING TITLE:
1ST FLOOR TO U/S 2ND FLOOR SHEARWALL DETAILS

SEAL & SIGNATURE:
STATE OF NEW YORK ANMAD RAHIMIAN No. 085051 LICENSED PROFESSIONAL ENGINEER

DATE:	03/03/15
PROJECT No:	1302510
DRAWN: CAD	REV:
CHK: CL	
SCALE: As indicated	
DWG No:	**S-800.01**
DOB PAGE No: of	

DOB EMPLOYEE STAMP:
Damian Titus
NYC Buildings
APPROVED
Under Directive 2 of 1975
AMENDED APPLICATION
Date: 10/08/2015
NYC Development Hub

DOB B-SCAN:

FILE NAME:
PLOT DATE:

DEPT OF BLDGS 121180528 Job Number
ES761262287 Scan Code

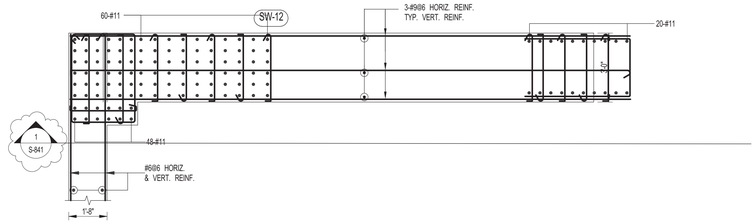

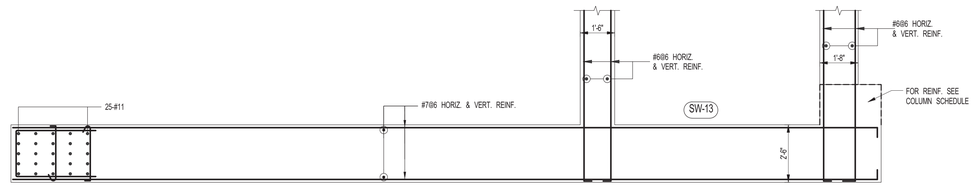

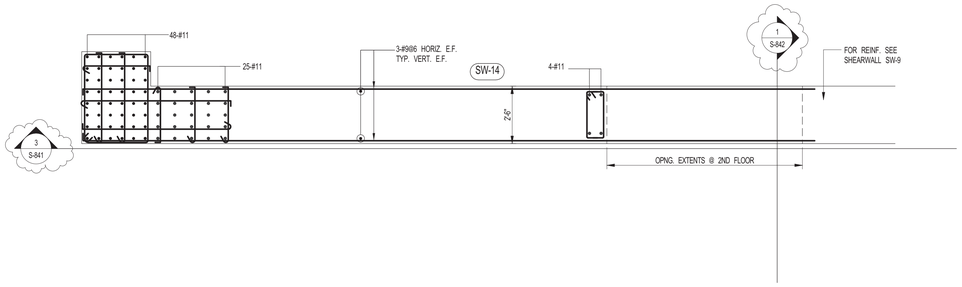

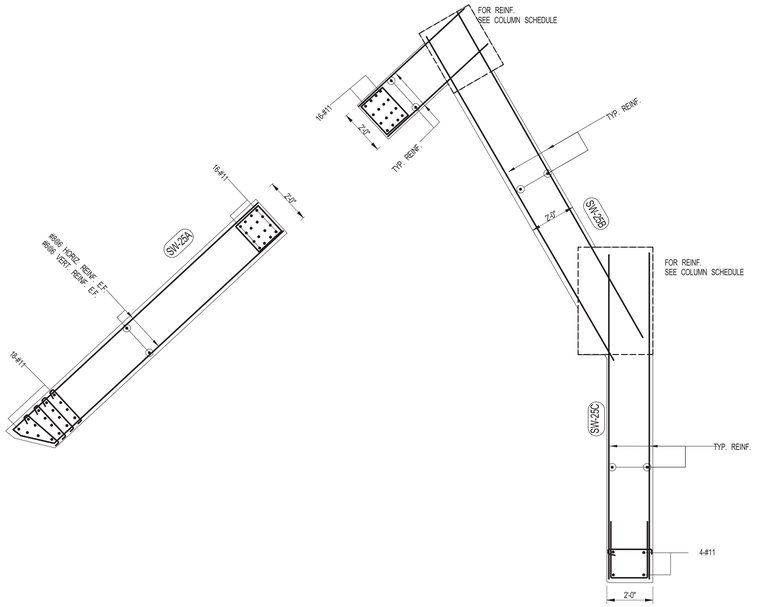

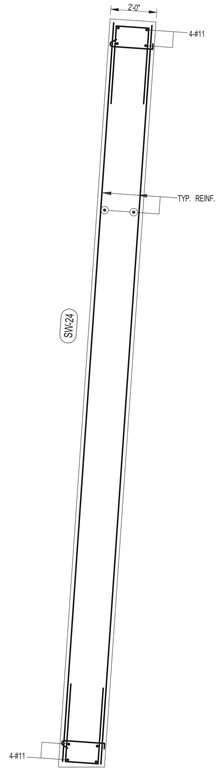

1 S-801 PART PLAN 1ST FLOOR TO U/S 2ND FLOOR SHEARWALL DETAILS

SCALE: 3/8" = 1'-0"

NOTES :

1. FOR NOTES SEE DRAWING S-940

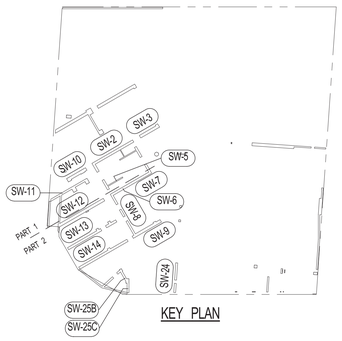

KEY PLAN

KEY PLAN:

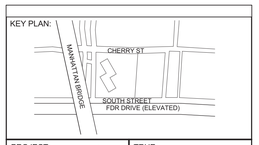

PROJECT NORTH

TRUE NORTH

DEVELOPER:
EXTELL DEVELOPMENT COMPANY
805 Third Ave, 7th Floor
New York, NY 10022
TEL: 212-712-6000 FAX: 212-712-6100

ARCHITECT OF RECORD:
AAI ARCHITECTS, P.C.
14 Wall Street, 2nd Floor
New York, NY 10005
TEL: 212-964-4040 FAX: 212-964-4090

INTERIOR DESIGNER:
MEYER DAVIS
180 Varick St, suite 404
New York, NY 10014
TEL: 212-627-5574

LANDSCAPE DESIGNER:
WEST 8 URBAN DESIGN & LANDSCAPE ARCHITECTURE P.C.
333 Hudson Street, Suite 905
New York, NY 10013
TEL: 212-285-0088 FAX: 212-285-0228

STRUCTURAL ENGINEERS:
WSP
228 East 45th Street
New York, NY 10017
TEL: 212-687-9888 FAX: 646-487-5501

MEP ENGINEERS:
ICOR ASSOCIATES, LLC
485 C Route 1 South, Suite 200
Iseline, NJ 08830
TEL: 908-272-3300 FAX: 908-272-4440

GEOTECHNICAL ENGINEERS:
LANGAN ENGINEERING & ENVIRONMENTAL SERVICES
21 Penn Plaza - 360 West 31st Street, 8th Floor
New York, NY 10001
TEL: 212.479.5400 FAX: 212.479.5444

No.	DESCRIPTION:	DATE:
1	CONCRETE BID PACKAGE	03-06-15
2	ISSUED FOR FILING	07-28-15

Discrepancies must be reported immediately to the Architect before proceeding. Only figured dimensions are to be used. Contractors must check all dimensions on site. This drawing is protected by copyright.

ALL DIMENSIONS ARE SHOWN IN IMPERIAL.

CONSULTANT:
WSP

PROJECT:
250 SOUTH STREET
NEW YORK, NY

DRAWING TITLE:
1ST FLOOR TO U/S 2ND FLOOR SHEARWALL DETAILS

SEAL & SIGNATURE:
STATE OF NEW YORK
AHMAD RAHIMIAN
No. 065537
LICENSED PROFESSIONAL ENGINEER

DATE:	03/04/15
PROJECT No:	1302510
DRAWN: CAD	REV:
CHK: CL	
SCALE: As indicated	
DWG No:	S-801.01
DOB PAGE No:	of

DOB EMPLOYEE STAMP:
Damian Titus
NYC Buildings
APPROVED
Under Directive 2 of 1975
AMENDED APPLICATION
Date: 10/08/2015
NYC Development Hub

DOB B-SCAN:

30" x 42" Arch E1 - SHEET SIZE
FILE NAME:
PLOT DATE:

DEPT OF BLDGS121105639 Job Number
IE3640807602 Scan Code

30" x 42" Arch E1 - SHEET SIZE

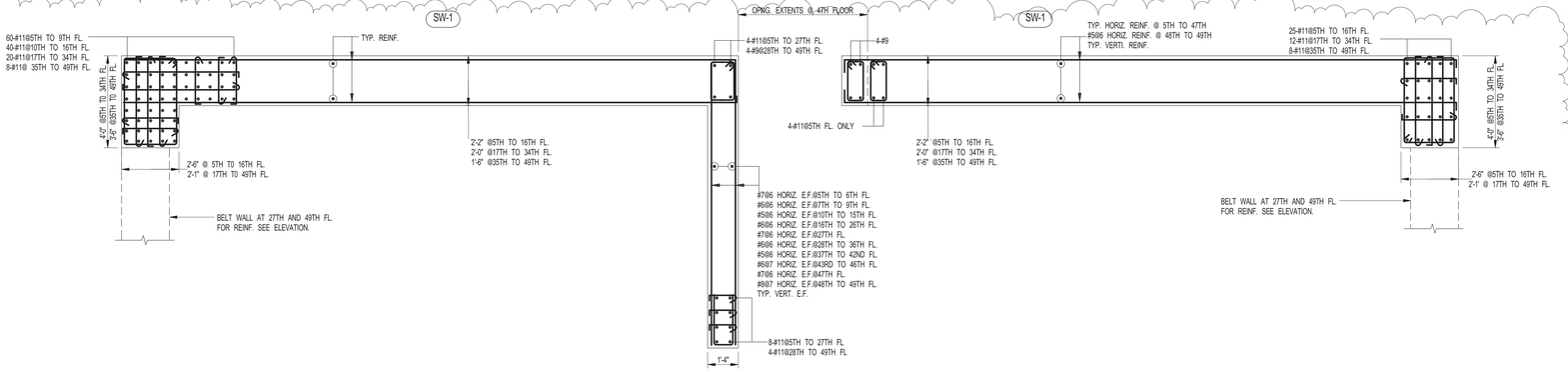

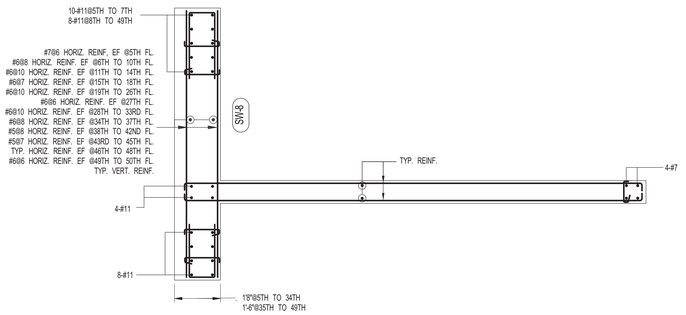

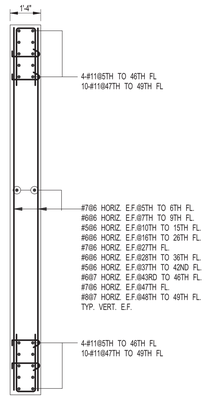

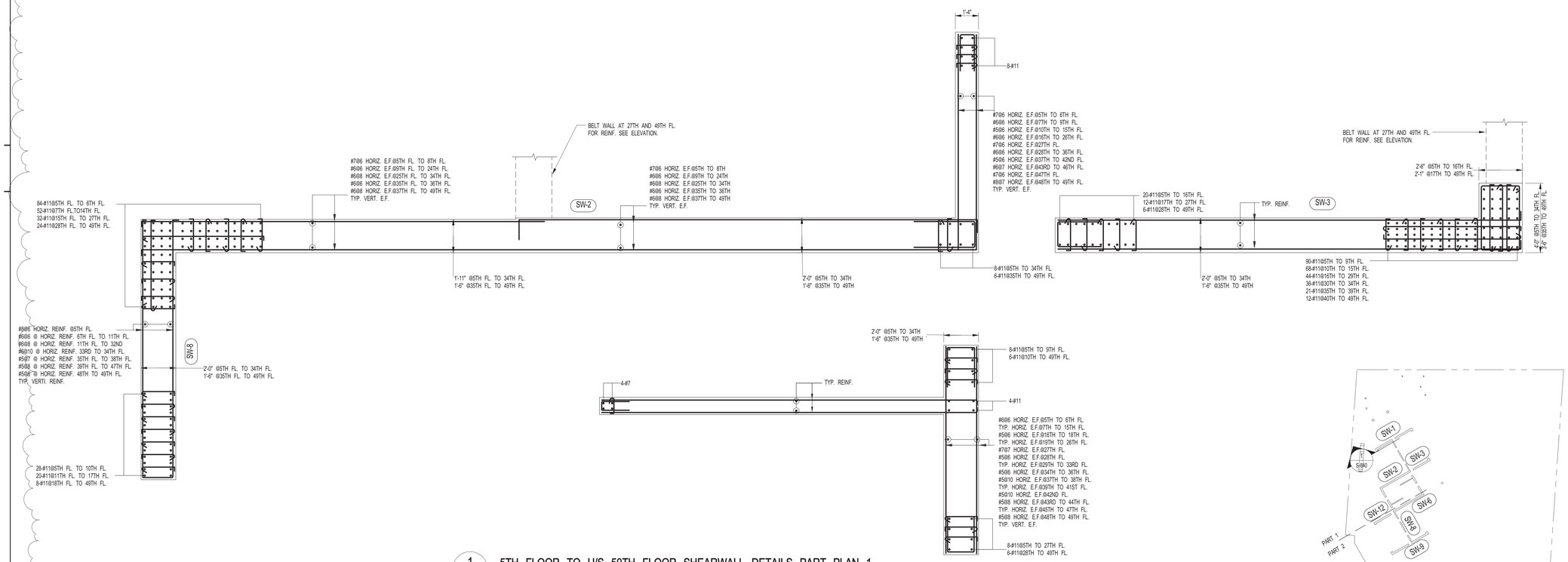

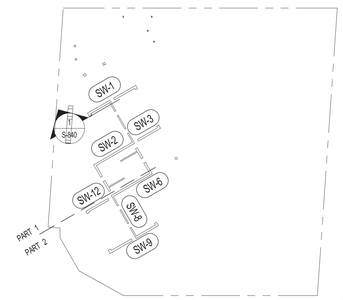

KEY PLAN

1 S-806 — 5TH FLOOR TO U/S 50TH FLOOR SHEARWALL DETAILS PART PLAN 1

SCALE: 3/8" = 1'-0"

NOTES :

1. FOR NOTES SEE DRAWING S-940

OUTRIGGER WALL @ 27TH & 49TH FLOOR NOT SHOWN FOR CLARITY. FOR WALL CONFIGURATION SEE CORRESPONDING FRAMING PLAN. FOR REINF. SEE ELEVATIONS.

FILE NAME:
PLOT DATE:

KEY PLAN:

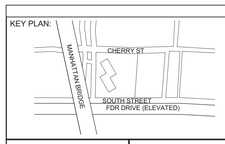

PROJECT NORTH

TRUE NORTH

DEVELOPER:
EXTELL DEVELOPMENT COMPANY
805 Third Ave, 7th Floor
New York, NY 10022
TEL: 212-712-6000 FAX: 212-712-6100

ARCHITECT OF RECORD:
AAI ARCHITECTS, P.C.
14 Wall Street, 2nd Floor
New York, NY 10005
TEL: 212-964-4040 FAX: 212-964-4090

INTERIOR DESIGNER:
MEYER DAVIS
180 Varick St, suite 404
New York, NY 10014
TEL: 212-627-5574

LANDSCAPE DESIGNER:
WEST 8 URBAN DESIGN & LANDSCAPE ARCHITECTURE P.C.
333 Hudson Street, Suite 905
New York, NY 10013
TEL: 212-285-0088 FAX: 212-285-0228

STRUCTURAL ENGINEERS:
WSP
228 East 45th Street
New York, NY 10017
TEL: 212-687-9888 FAX: 646-487-5501

MEP ENGINEERS:
ICOR ASSOCIATES, LLC
485 C Route 1 South, Suite 200
Iseline, NJ 08830
TEL: 908-272-3300 FAX: 908-272-4440

GEOTECHNICAL ENGINEERS:
LANGAN ENGINEERING & ENVIRONMENTAL SERVICES
21 Penn Plaza - 360 West 31st Street, 8th Floor
New York, NY 10001
TEL: 212.479.5400 FAX: 212.479.5444

No.	DESCRIPTION:	DATE:
1	CONCRETE BID PACKAGE	03-06-15
2	50% CONSTRUCTION DOCUMENTS	04-08-15
3	ISSUED FOR FILING	07-28-15

Discrepancies must be reported immediately to the Architect before proceeding. Only figured dimensions are to be used. Contractors must check all dimensions on site. This drawing is protected by copyright.

ALL DIMENSIONS ARE SHOWN IN IMPERIAL.

CONSULTANT:
WSP

PROJECT:
250 SOUTH STREET
NEW YORK, NY

DRAWING TITLE:
5TH FLOOR TO U/S 50TH FLOOR SHEARWALL DETAILS

SEAL & SIGNATURE:
STATE OF NEW YORK — ANAND RAMDHANY — No. 085551 — LICENSED PROFESSIONAL ENGINEER

DATE:	03/03/15
PROJECT No:	1302510
DRAWN: CAD	REV:
CHK: CL	
SCALE: As indicated	
DWG No:	**S-806.01**
DOB PAGE No:	of

DOB EMPLOYEE STAMP:
Damian Titus
Buildings
APPROVED
Under Directive 2 of 1975
AMENDED APPLICATION
Date: 10/08/2015
NYC Development Hub

DOB B-SCAN:

DEPT OF BLDGS121105639 Job Number
E-520187853 Scan Code
30" x 42" Arch E1 - SHEET SIZE

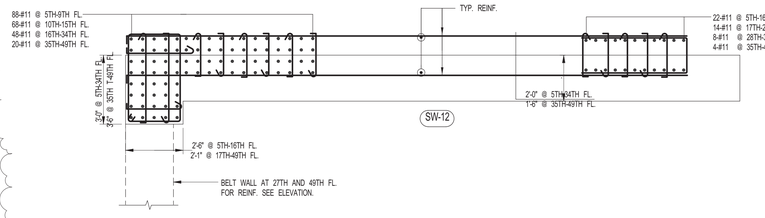

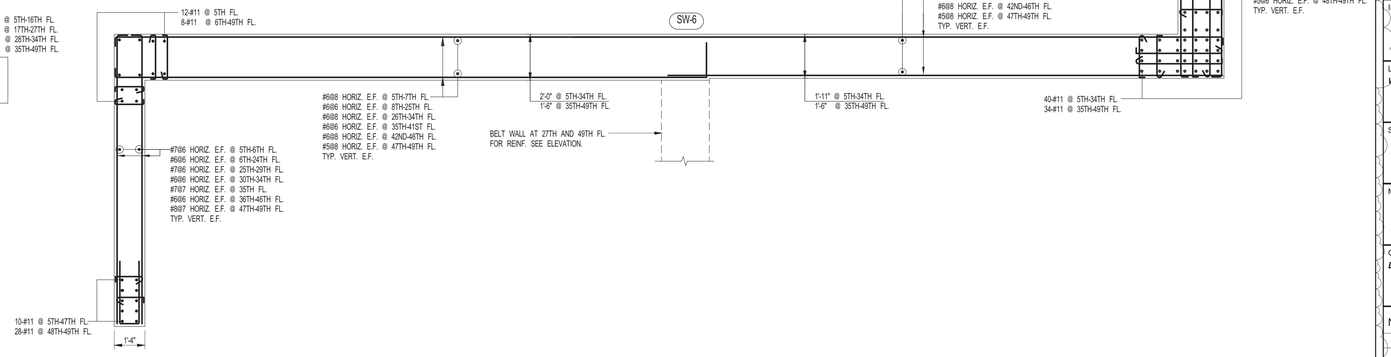

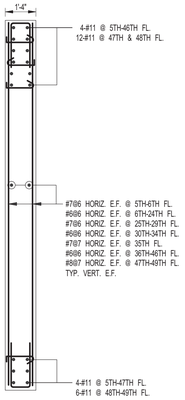

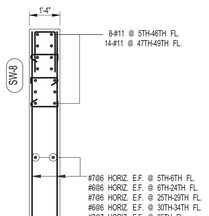

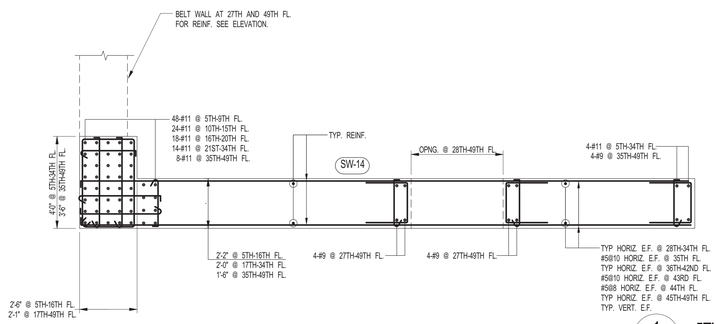

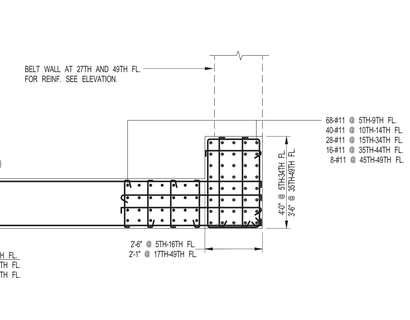

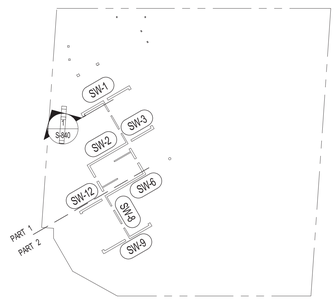

KEY PLAN

1 S-807 — 5TH FLOOR TO U/S 50TH FLOOR SHEARWALL DETAILS PART PLAN 2

SCALE: 3/8" = 1'-0"

NOTES :

1. FOR NOTES SEE DRAWING S-940

KEY PLAN:

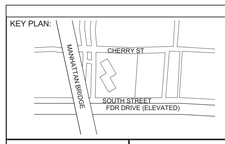

PROJECT NORTH

TRUE NORTH

DEVELOPER:
EXTELL DEVELOPMENT COMPANY
805 Third Ave, 7th Floor
New York, NY 10022
TEL: 212-712-6000 FAX: 212-712-6100

ARCHITECT OF RECORD:
AAI ARCHITECTS, P.C.
14 Wall Street, 2nd Floor
New York, NY 10005
TEL: 212-964-4040 FAX: 212-964-4090

INTERIOR DESIGNER:
MEYER DAVIS
180 Varick St, suite 404
New York, NY 10014
TEL: 212-627-5574

LANDSCAPE DESIGNER:
WEST 8 URBAN DESIGN & LANDSCAPE ARCHITECTURE P.C.
333 Hudson Street, Suite 905
New York, NY 10013
TEL: 212-285-0088 FAX: 212-285-0228

STRUCTURAL ENGINEERS:
WSP
228 East 45th Street
New York, NY 10017
TEL: 212-687-9888 FAX: 646-487-5501

MEP ENGINEERS:
ICOR ASSOCIATES, LLC
485 C Route 1 South, Suite 200
Iseline, NJ 08830
TEL: 908-272-3300 FAX: 908-272-4440

GEOTECHNICAL ENGINEERS:
LANGAN ENGINEERING & ENVIRONMENTAL SERVICES
21 Penn Plaza - 360 West 31st Street, 8th Floor
New York, NY 10001
TEL: 212.479.5400 FAX: 212.479.5444

No.	DESCRIPTION:	DATE:
1	CONCRETE BID PACKAGE	03-06-15
2	50% CONSTRUCTION DOCUMENTS	04-08-15
3	ISSUED FOR FILING	07-28-15

Discrepancies must be reported immediately to the Architect before proceeding. Only figured dimensions are to be used. Contractors must check all dimensions on site. This drawing is protected by copyright.

ALL DIMENSIONS ARE SHOWN IN IMPERIAL.

CONSULTANT: WSP

PROJECT:
250 SOUTH STREET
NEW YORK, NY

DRAWING TITLE:
5TH FLOOR TO U/S 50TH FLOOR SHEARWALL DETAILS

SEAL & SIGNATURE:

DATE:	03/05/15
PROJECT No:	1302510
DRAWN: CAD	REV:
CHK: CL	
SCALE: As indicated	
DWG No:	**S-807.01**
DOB PAGE No:	of

DOB EMPLOYEE STAMP:

Damian Titus
Buildings
APPROVED
Under Directive 2 of 1975
AMENDED APPLICATION
Date: 10/08/2015
NYC Development Hub

DOB B-SCAN:

FILE NAME:
PLOT DATE:

DEPT OF BLDGS121105039 Job Number
E38812.2020.39 Scan Code

30" x 42" Arch E1 - SHEET SIZE

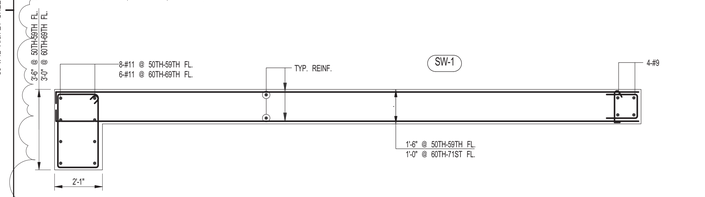

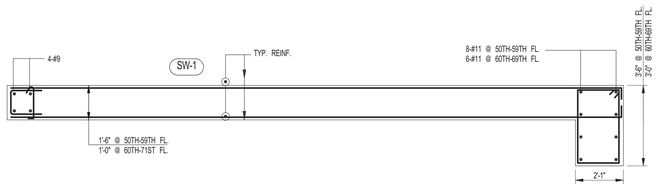

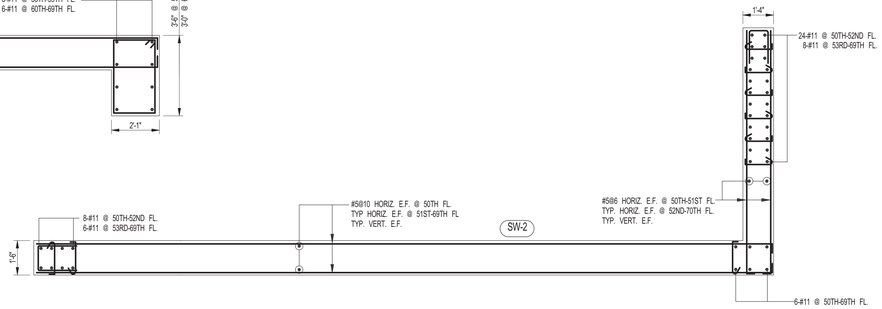

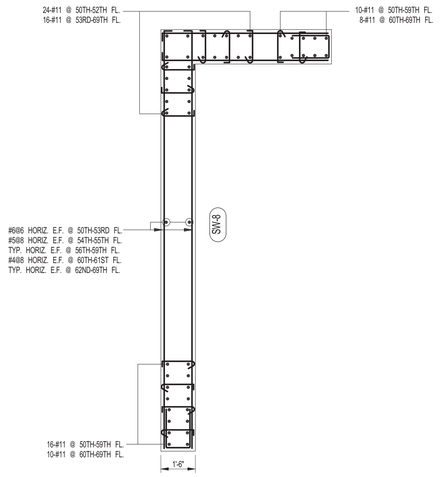

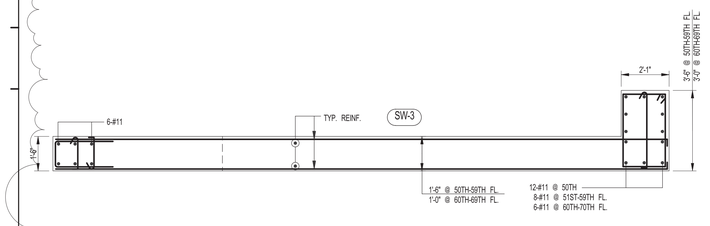

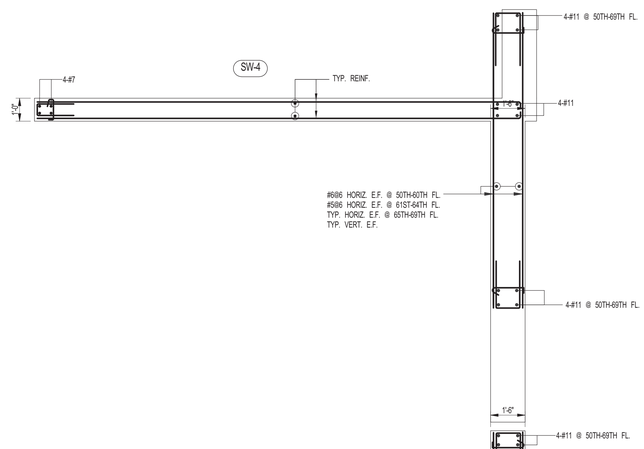

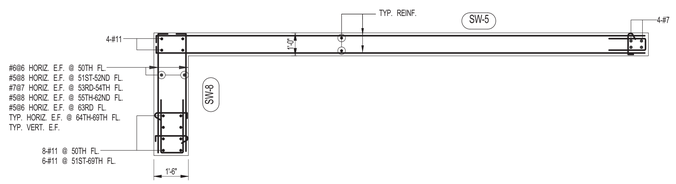

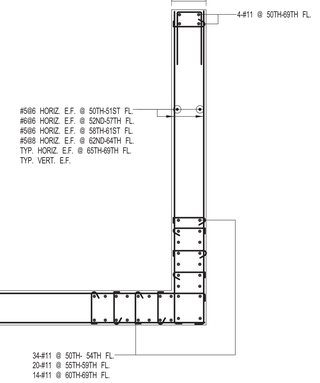

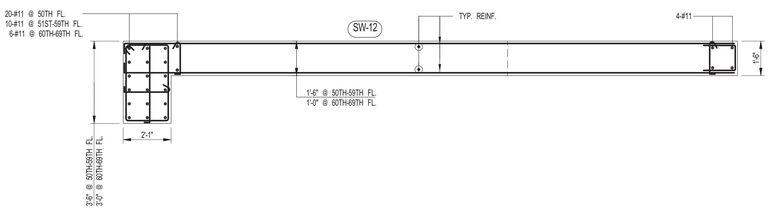

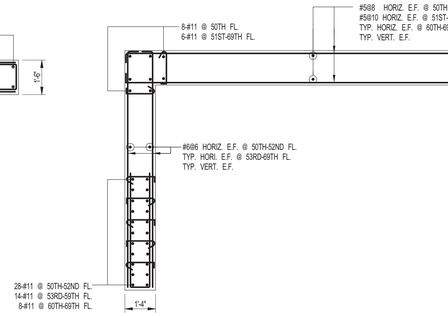

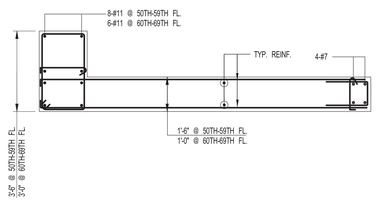

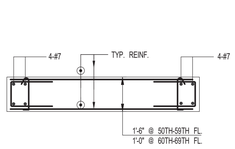

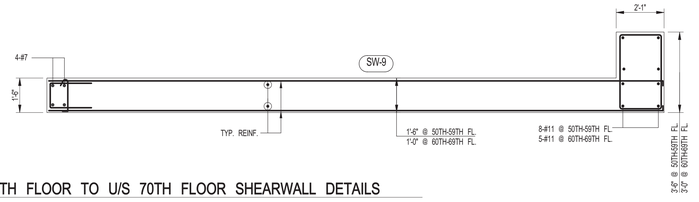

1 S-808 PART PLAN 50TH FLOOR TO U/S 70TH FLOOR SHEARWALL DETAILS

SCALE: 3/8" = 1'-0"

NOTES :

1. FOR NOTES SEE DRAWING S-940

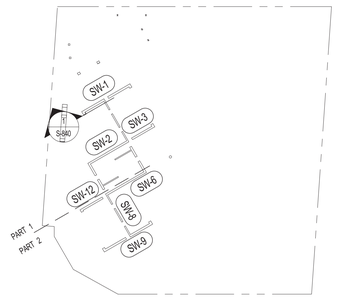

KEY PLAN

KEY PLAN:

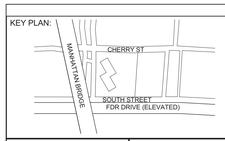

PROJECT NORTH

TRUE NORTH

DEVELOPER:
EXTELL DEVELOPMENT COMPANY
805 Third Ave, 7th Floor
New York, NY 10022
TEL: 212-712-6000 FAX: 212-712-6100

ARCHITECT OF RECORD:
AAI ARCHITECTS, P.C.
14 Wall Street, 2nd Floor
New York, NY 10005
TEL: 212-964-4040 FAX: 212-964-4090

INTERIOR DESIGNER:
MEYER DAVIS
180 Varick St, suite 404
New York, NY 10014
TEL: 212-627-5574

LANDSCAPE DESIGNER:
WEST 8 URBAN DESIGN & LANDSCAPE ARCHITECTURE P.C.
333 Hudson Street, Suite 905
New York, NY 10013
TEL: 212-285-0088 FAX: 212-285-0228

STRUCTURAL ENGINEERS:
WSP
228 East 45th Street
New York, NY 10017
TEL: 212-687-9888 FAX: 646-487-5501

MEP ENGINEERS:
ICOR ASSOCIATES, LLC
485 C Route 1 South, Suite 200
Iselin, NJ 08830
TEL: 908-272-3300 FAX: 908-272-4440

GEOTECHNICAL ENGINEERS:
LANGAN ENGINEERING & ENVIRONMENTAL SERVICES
21 Penn Plaza - 360 West 31st Street, 8th Floor
New York, NY 10001
TEL: 212.479.5400 FAX: 212.479.5444

No.	DESCRIPTION:	DATE:
1	CONCRETE BID PACKAGE	03-06-15
2	ISSUED FOR FILING	07-28-15

Discrepancies must be reported immediately to the Architect before proceeding. Only figured dimensions are to be used. Contractors must check all dimensions on site. This drawing is protected by copyright.

ALL DIMENSIONS ARE SHOWN IN IMPERIAL.

CONSULTANT:
WSP

PROJECT:
250 SOUTH STREET
NEW YORK, NY

DRAWING TITLE:
50TH FLOOR TO U/S 70TH FLOOR SHEARWALL DETAILS

SEAL & SIGNATURE:
STATE OF NEW YORK ANMAD RAHIMIAN No. 085551 LICENSED PROFESSIONAL ENGINEER

DATE: 03/09/15
PROJECT No: 1302510
DRAWN: CAD REV:
CHK: CL
SCALE: As indicated
DWG No:
S-808.01
DOB PAGE No: of

DOB EMPLOYEE STAMP:
Damian Titus
NYC Buildings
APPROVED
Under Directive 2 of 1975
AMENDED APPLICATION
Date: 10/08/2015
NYC Development Hub

DOB B-SCAN:

FILE NAME:
PLOT DATE:

DEPT OF BLDGS121185928 Job Number
E324391255?? Scan Code

30" x 42" Arch E1 - SHEET SIZE

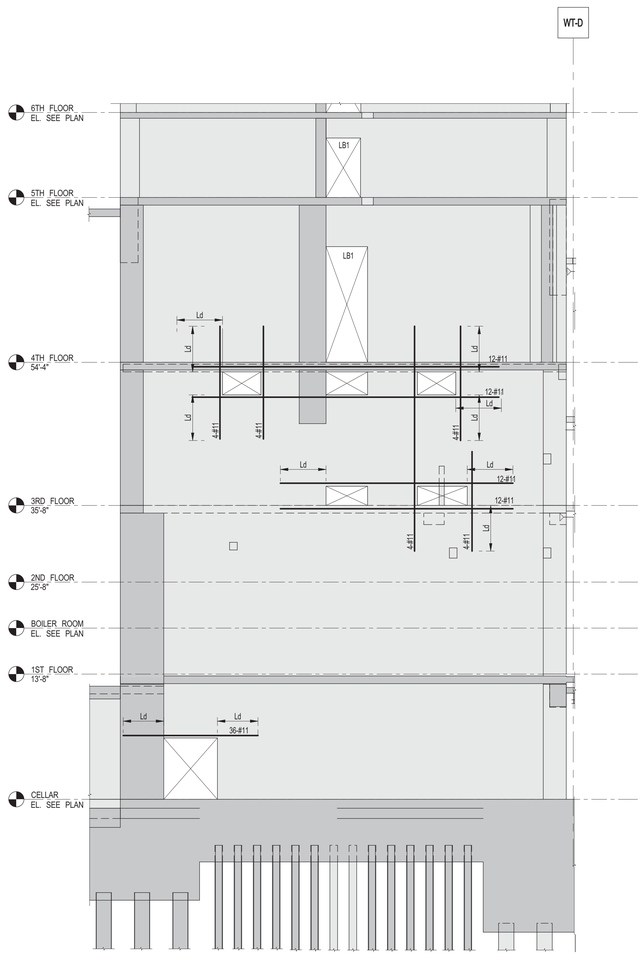

1 S-840 SW-1 ELEVATION- CELLAR - U/S OF 6TH FLOOR
SCALE: 1/8" = 1'-0"

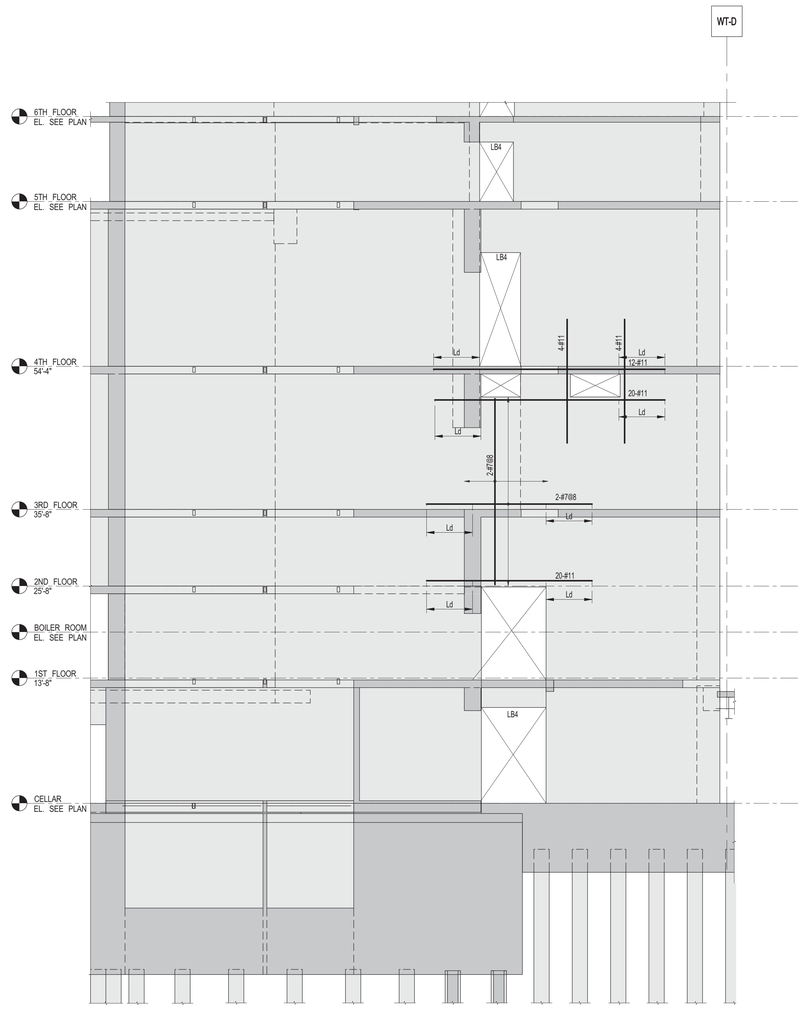

2 S-840 SW-2 & SW-3 ELEVATION- CELLAR - U/S OF 6TH FLOOR
SCALE: 1/8" = 1'-0"

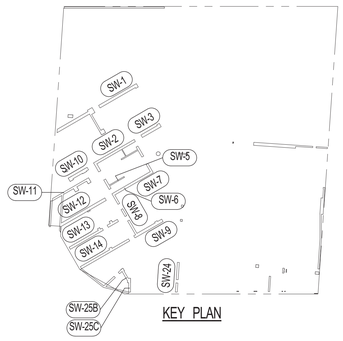

KEY PLAN

KEY PLAN:
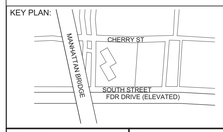

PROJECT NORTH
TRUE NORTH

DEVELOPER:
EXTELL DEVELOPMENT COMPANY
805 Third Ave, 7th Floor
New York, NY 10022
TEL: 212-712-6000 FAX: 212-712-6100

ARCHITECT OF RECORD:
AAI ARCHITECTS, P.C.
14 Wall Street, 2nd Floor
New York, NY 10005
TEL: 212-964-4040 FAX: 212-964-4090

INTERIOR DESIGNER:
MEYER DAVIS
180 Varick St, suite 404
New York, NY 10014
TEL: 212-627-5574

LANDSCAPE DESIGNER:
WEST 8 URBAN DESIGN & LANDSCAPE ARCHITECTURE P.C.
333 Hudson Street, Suite 905
New York, NY 10013
TEL: 212-285-0088 FAX: 212-285-0228

STRUCTURAL ENGINEERS:
WSP
228 East 45th Street
New York, NY 10017
TEL: 212-687-9888 FAX: 646-487-5501

MEP ENGINEERS:
ICOR ASSOCIATES, LLC
485 C Route 1 South, Suite 200
Iseline, NJ 08830
TEL: 908-272-3300 FAX: 908-272-4440

GEOTECHNICAL ENGINEERS:
LANGAN ENGINEERING & ENVIRONMENTAL SERVICES
21 Penn Plaza - 360 West 31st Street, 8th Floor
New York, NY 10001
TEL: 212.479.5400 FAX: 212.479.5444

No.	DESCRIPTION:	DATE:
1	50% CONSTRUCTION DOCUMENTS	04-08-15
2	ISSUED FOR FILING	07-28-15

Discrepancies must be reported immediately to the Architect before proceeding. Only figured dimensions are to be used. Contractors must check all dimensions on site. This drawing is protected by copyright.

ALL DIMENSIONS ARE SHOWN IN IMPERIAL.

CONSULTANT:
WSP

PROJECT:
250 SOUTH STREET
NEW YORK, NY

DRAWING TITLE:
SHEARWALL ELEVATIONS 1
FROM CELLAR-U/S OF 6TH FLOOR

SEAL & SIGNATURE:
STATE OF NEW YORK · AHMAD RAHIMIAN · No. 085527 · LICENSED PROFESSIONAL ENGINEER

DATE:	04/06/15
PROJECT No:	1302510
DRAWN: CAD	REV:
CHK: CL	
SCALE: As indicated	
DWG No:	**S-840.00**
DOB PAGE No:	of

DOB EMPLOYEE STAMP:
Damian Titus
NYC Buildings
APPROVED
Under Directive 2 of 1975
AMENDED APPLICATION
Date: 10/08/2015
NYC Development Hub

DOB B-SCAN:

FILE NAME:
PLOT DATE:

DEPT OF BLDGS121105539 Job Number
E1597393148 Scan Code

30" x 42" Arch E1 - SHEET SIZE

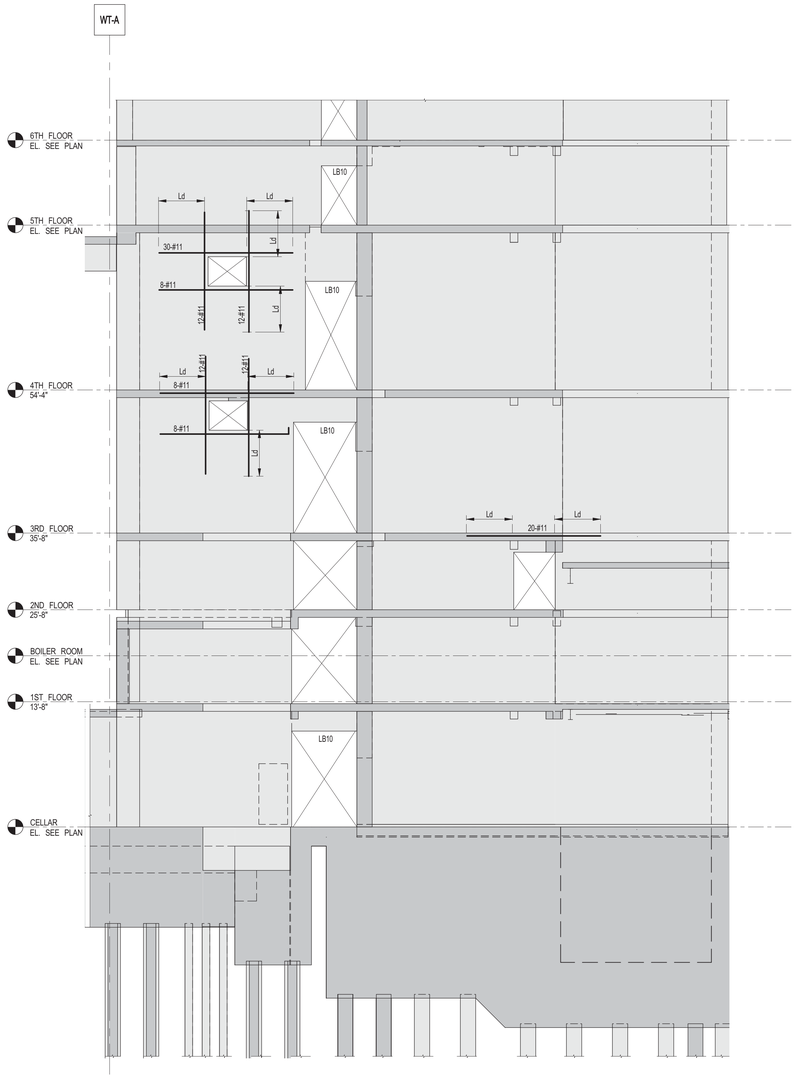

1 S-841 SW-6 & SW-12 ELEVATION- CELLAR - U/S OF 6TH FLOOR
SCALE: 1/8" = 1'-0"

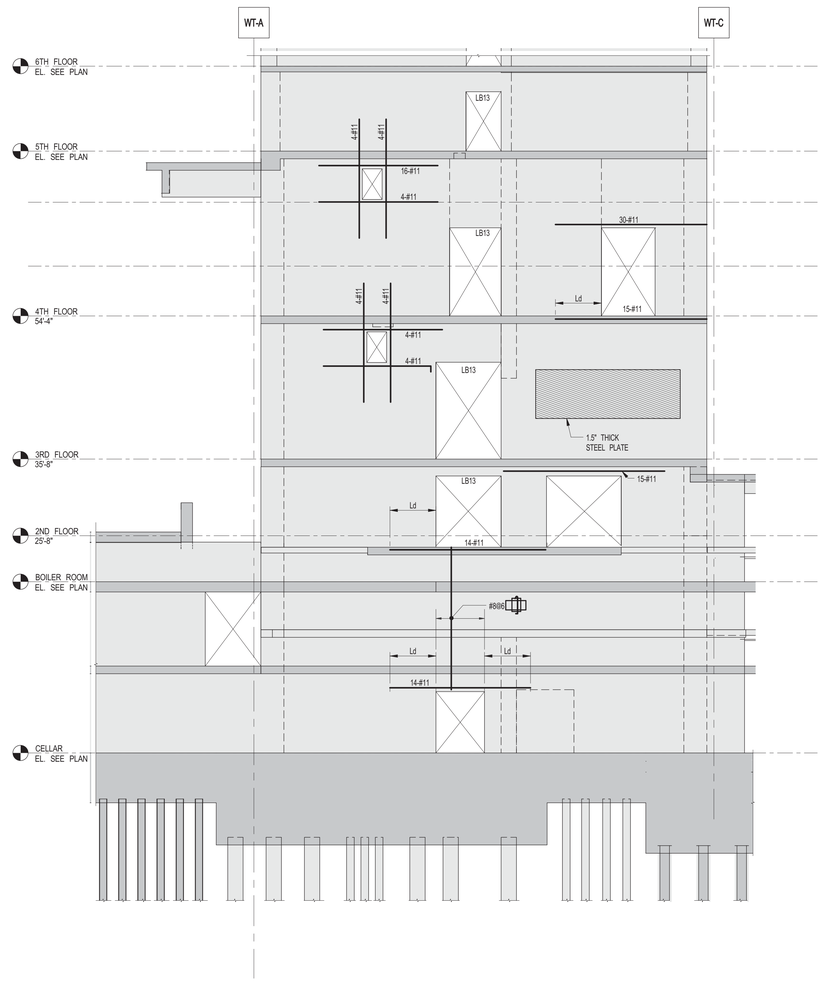

3 S-841 SW-9 & SW-14 ELEVATION CELLAR - U/S OF 6TH FLOOR
SCALE: 1/8" = 1'-0"

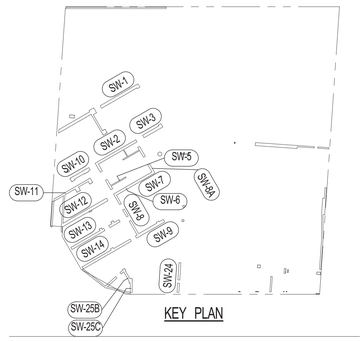

KEY PLAN

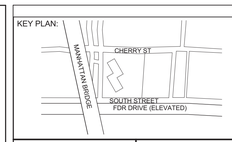

PROJECT NORTH

TRUE NORTH

DEVELOPER:
EXTELL DEVELOPMENT COMPANY
805 Third Ave, 7th Floor
New York, NY 10022
TEL: 212-712-6000 FAX: 212-712-6100

ARCHITECT OF RECORD:
AAI ARCHITECTS, P.C.
14 Wall Street, 2nd Floor
New York, NY 10005
TEL: 212-964-4040 FAX: 212-964-4090

INTERIOR DESIGNER:
MEYER DAVIS
180 Varick St, suite 404
New York, NY 10014
TEL: 212-627-5574

LANDSCAPE DESIGNER:
WEST 8 URBAN DESIGN & LANDSCAPE ARCHITECTURE P.C.
333 Hudson Street, Suite 905
New York, NY 10013
TEL: 212-285-0088 FAX: 212-285-0228

STRUCTURAL ENGINEERS:
WSP
228 East 45th Street
New York, NY 10017
TEL: 212-687-9888 FAX: 646-487-5501

MEP ENGINEERS:
ICOR ASSOCIATES, LLC
485 C Route 1 South, Suite 200
Iseline, NJ 08830
TEL: 908-272-3300 FAX: 908-272-4440

GEOTECHNICAL ENGINEERS:
LANGAN ENGINEERING & ENVIRONMENTAL SERVICES
21 Penn Plaza - 360 West 31st Street, 8th Floor
New York, NY 10001
TEL: 212.479.5400 FAX: 212.479.5444

No.	DESCRIPTION:	DATE:
1	50% CONSTRUCTION DOCUMENTS	04-08-15
2	ISSUED FOR FILING	07-28-15

Discrepancies must be reported immediately to the Architect before proceeding. Only figured dimensions are to be used. Contractors must check all dimensions on site. This drawing is protected by copyright.

ALL DIMENSIONS ARE SHOWN IN IMPERIAL.

CONSULTANT:
WSP

PROJECT:
250 SOUTH STREET
NEW YORK, NY

DRAWING TITLE:
SHEARWALL ELEVATION 2
FROM CELLAR-U/S OF 6TH FLOOR

SEAL & SIGNATURE:
STATE OF NEW YORK · HAMAD RAHMAN · No. 085027 · LICENSED PROFESSIONAL ENGINEER

DATE:	04/06/15
PROJECT No:	1302510
DRAWN: CAD	REV:
CHK: CL	
SCALE: As indicated	
DWG No:	**S-841.00**
DOB PAGE No:	of

DOB EMPLOYEE STAMP:
Damian Titus
Buildings
APPROVED
Under Directive 2 of 1975
AMENDED APPLICATION
Date: 10/08/2015
NYC Development Hub

DOB B-SCAN:

FILE NAME:
PLOT DATE:

DEPT OF BLDGS 121180528 Job Number
E:5199182141 Scan Code

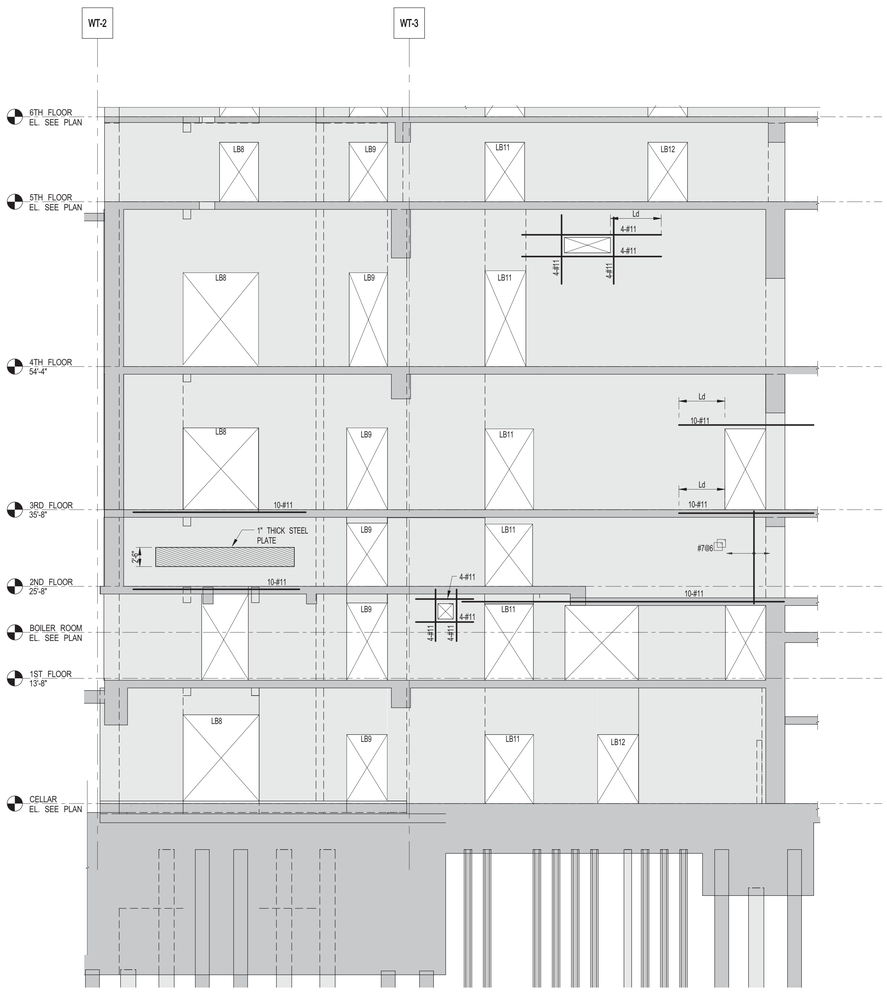

1 S-842 SW-8 ELEVATION- CELLAR - U/S OF 6TH FLOOR
SCALE: 1/8" = 1'-0"

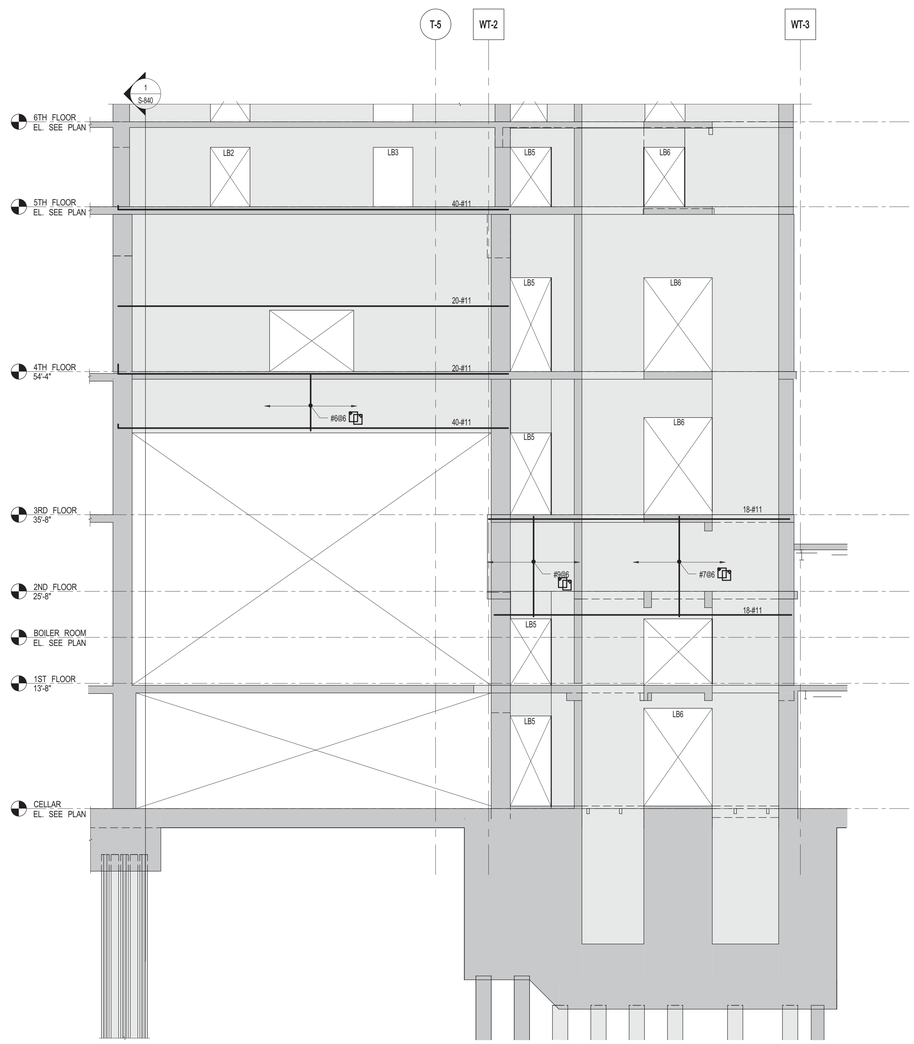

2 S-842 SW-8A ELEVATION- CELLAR - U/S OF 6TH FLOOR
SCALE: 1/8" = 1'-0"

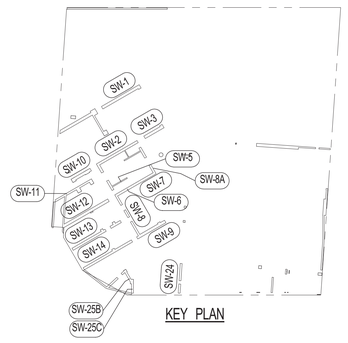

KEY PLAN

KEY PLAN:

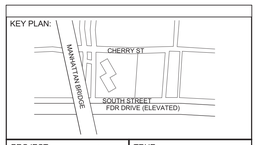

PROJECT NORTH

TRUE NORTH

DEVELOPER:
EXTELL DEVELOPMENT COMPANY
805 Third Ave, 7th Floor
New York, NY 10022
TEL: 212-712-6000 FAX: 212-712-6100

ARCHITECT OF RECORD:
AAI ARCHITECTS, P.C.
14 Wall Street, 2nd Floor
New York, NY 10005
TEL: 212-964-4040 FAX: 212-964-4090

INTERIOR DESIGNER:
MEYER DAVIS
180 Varick St, suite 404
New York, NY 10014
TEL: 212-627-5574

LANDSCAPE DESIGNER:
WEST 8 URBAN DESIGN & LANDSCAPE ARCHITECTURE P.C.
333 Hudson Street, Suite 905
New York, NY 10013
TEL: 212-285-0088 FAX: 212-285-0228

STRUCTURAL ENGINEERS:
WSP
228 East 45th Street
New York, NY 10017
TEL: 212-687-9888 FAX: 646-487-5501

MEP ENGINEERS:
ICOR ASSOCIATES, LLC
485 C Route 1 South, Suite 200
Iseline, NJ 08830
TEL: 908-272-3300 FAX: 908-272-4440

GEOTECHNICAL ENGINEERS:
LANGAN ENGINEERING & ENVIRONMENTAL SERVICES
21 Penn Plaza - 360 West 31st Street, 8th Floor
New York, NY 10001
TEL: 212.479.5400 FAX: 212.479.5444

No.	DESCRIPTION:	DATE:
1	50% CONSTRUCTION DOCUMENTS	04-08-15
2	ISSUED FOR FILING	07-28-15

Discrepancies must be reported immediately to the Architect before proceeding. Only figured dimensions are to be used. Contractors must check all dimensions on site. This drawing is protected by copyright.

ALL DIMENSIONS ARE SHOWN IN IMPERIAL.

CONSULTANT:
WSP

PROJECT:
250 SOUTH STREET
NEW YORK, NY

DRAWING TITLE:
SHEARWALL ELEVATION 3
FROM CELLAR-U/S OF 6TH FLOOR

SEAL & SIGNATURE:
STATE OF NEW YORK
AHMAD RAHMAN
No. 065537
LICENSED PROFESSIONAL ENGINEER

DATE:	04/08/15
PROJECT No:	1302510
DRAWN: CAD	REV:
CHK: CL	
SCALE: As indicated	
DWG No:	S-842.00
DOB PAGE No:	of

DOB EMPLOYEE STAMP:
Damian Titus
Buildings
APPROVED
Under Directive 2 of 1975
AMENDED APPLICATION
Date: 10/08/2015
NYC Development Hub

DOB B-SCAN:

30" x 42" Arch E1 - SHEET SIZE

FILE NAME:
PLOT DATE:

DEPT OF BLDGS121185529 Job Number
E5994453761 Scan Code
30" x 42" Arch E1 - SHEET SIZE

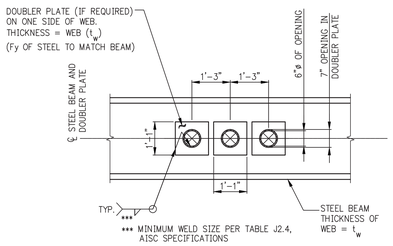

STEEL LINK BEAM WEB OPENING TYPE 1

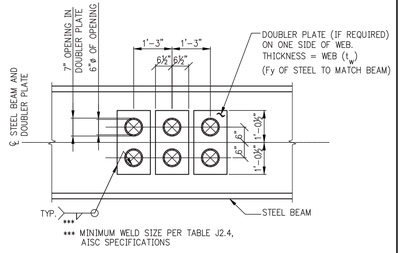

STEEL LINK BEAM WEB OPENING TYPE 2

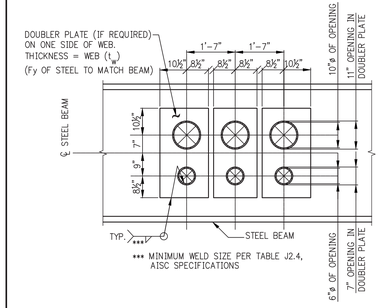

STEEL LINK BEAM WEB OPENING TYPE 3

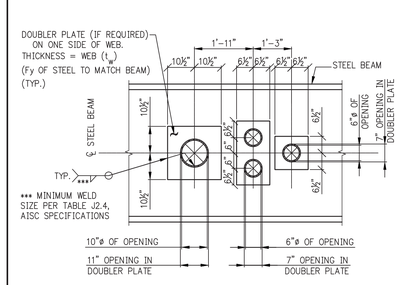

STEEL LINK BEAM WEB OPENING TYPE 4

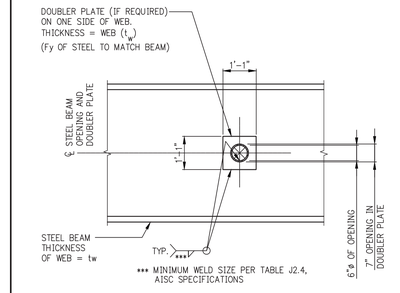

STEEL LINK BEAM WEB OPENING TYPE 5

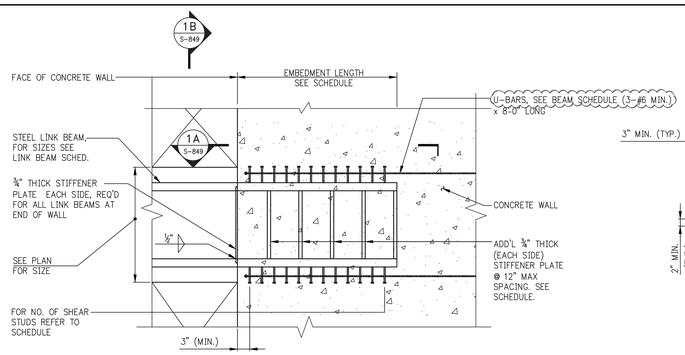

TYPICAL STEEL LINK BEAM EMBEDMENT DETAIL

NOTES:
1. ALL STUDS SHALL BE A108 ⅞"ø Fu = 65ksi

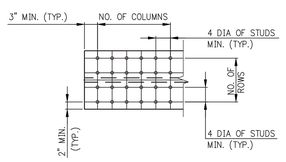

1A S-849 PLAN VIEW

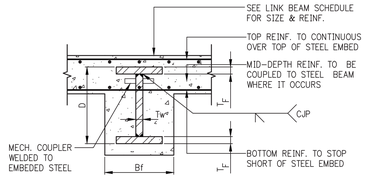

1B S-849 BUILT-UP STEEL LINK BEAM DETAIL
SCALE: N.T.S.
NOTE:
1. PLATES SHALL BE A572 GR. 65 (Fy=65 KSI)

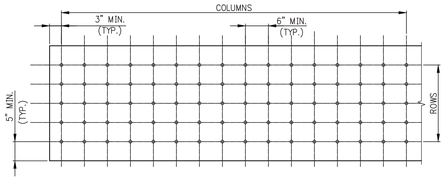

1C S-849 STUD LOCATION FOR STEEL PLATE

NOTE:
1. STUDS ON PLATES SHOULD HAVE LENGTH EQUAL TO 5 DIA. OF STUDS.

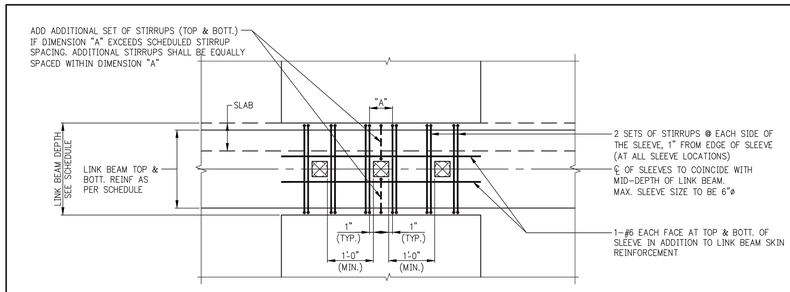

ELEVATION – TYPICAL SLEEVE PENETRATION DETAIL THROUGH LINK BEAMS

NOTES:
1. ALL SCHEDULED BEAM REINFORCEMENT (NOT SHOWN) IS TO BE CONTINUOUS
2. FOR 2 OR MORE SLEEVES, ALL SLEEVES SHALL BE POSITIONED & ALIGNED HORIZONTALLY AS INDICATED ON THE TYPICAL DETAIL.
3. SLEEVE PENETRATIONS THAT DO NOT SATISFY THE REQUIREMENTS OF THIS DETAIL ARE NOT PERMITTED UNLESS REVIEWED AND APPROVED BY THE ENGINEER OF RECORD IN ADVANCE OF CONSTRUCTION.

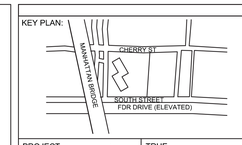

PROJECT NORTH | TRUE NORTH

DEVELOPER:
EXTELL DEVELOPMENT COMPANY
805 Third Ave, 7th Floor
New York, NY 10022
TEL: 212-712-6000 FAX: 212-712-6100

ARCHITECT OF RECORD:
AAI ARCHITECTS, P.C.
14 Wall Street, 2nd Floor
New York, NY 10005
TEL: 212-964-4040 FAX: 212-964-4090

INTERIOR DESIGNER:
MEYER DAVIS
180 Varick St, suite 404
New York, NY 10014
TEL: 212-627-5574

LANDSCAPE DESIGNER:
WEST 8 URBAN DESIGN & LANDSCAPE ARCHITECTURE P.C.
333 Hudson Street, Suite 905
New York, NY 10013
TEL: 212-285-0088 FAX: 212-285-0228

STRUCTURAL ENGINEERS:
WSP
228 East 45th Street
New York, NY 10017
TEL: 212-687-9888 FAX: 646-487-5501

MEP ENGINEERS:
ICOR ASSOCIATES, LLC
485 C Route 1 South, Suite 200
Iseline, NJ 08830
TEL: 908-272-3300 FAX: 908-272-4440

GEOTECHNICAL ENGINEERS:
LANGAN ENGINEERING & ENVIRONMENTAL SERVICES
21 Penn Plaza - 360 West 31st Street, 8th Floor
New York, NY 10001
TEL: 212.479.5400 FAX: 212.479.5444

No.	DESCRIPTION:	DATE:
1	CONCRETE BID PACKAGE	03-06-15
2	ADDENDUM #5	05-01-15
3	ISSUED FOR FILING	07-28-15

Discrepancies must be reported immediately to the Architect before proceeding. Only figured dimensions are to be used. Contractors must check all dimensions on site. This drawing is protected by copyright.

ALL DIMENSIONS ARE SHOWN IN IMPERIAL.

CONSULTANT: WSP

PROJECT:
250 SOUTH STREET
NEW YORK, NY

DRAWING TITLE:
TYPICAL SHEARWALL DETAILS

SEAL & SIGNATURE: STATE OF NEW YORK · AHMAD RAHIMIAN · No. 085927 · LICENSED PROFESSIONAL ENGINEER

DATE:	07/25/14
PROJECT No:	1302510
DRAWN: CADD	REV:
CHK: CL	
SCALE: N.T.S.	

DWG No: **S-849.01**

DOB PAGE No: of

DOB EMPLOYEE STAMP: Damian Titus · NYC Buildings · APPROVED · Under Directive 2 of 1975 · AMENDED APPLICATION · Date: 10/08/2015 · NYC Development Hub

DOB B-SCAN:

FILE NAME:
PLOT DATE:

DEPT OF BLDGS 121185528 Job Number
ES463175572 Scan Code

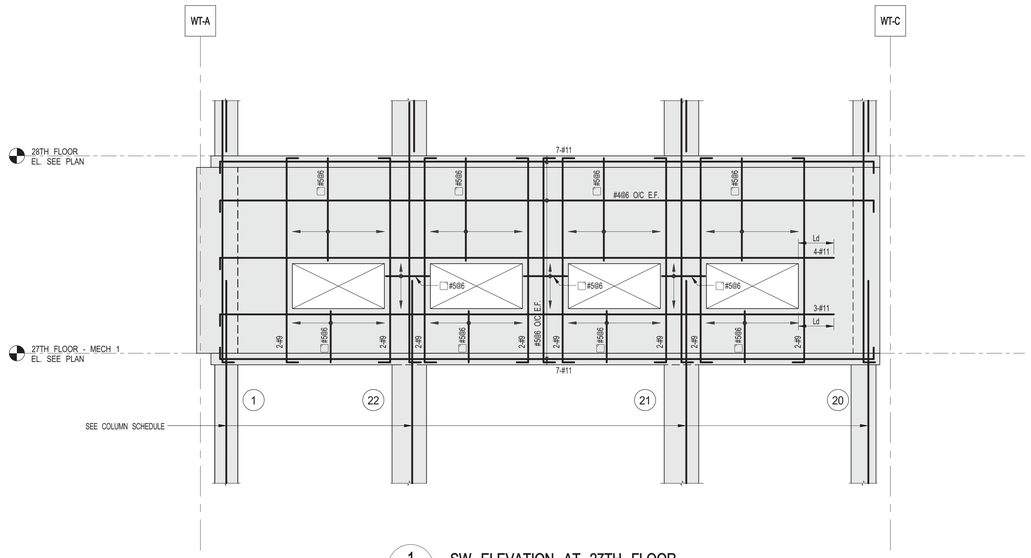

1 S-850 SW ELEVATION AT 27TH FLOOR
SCALE: 3/16" = 1'-0"

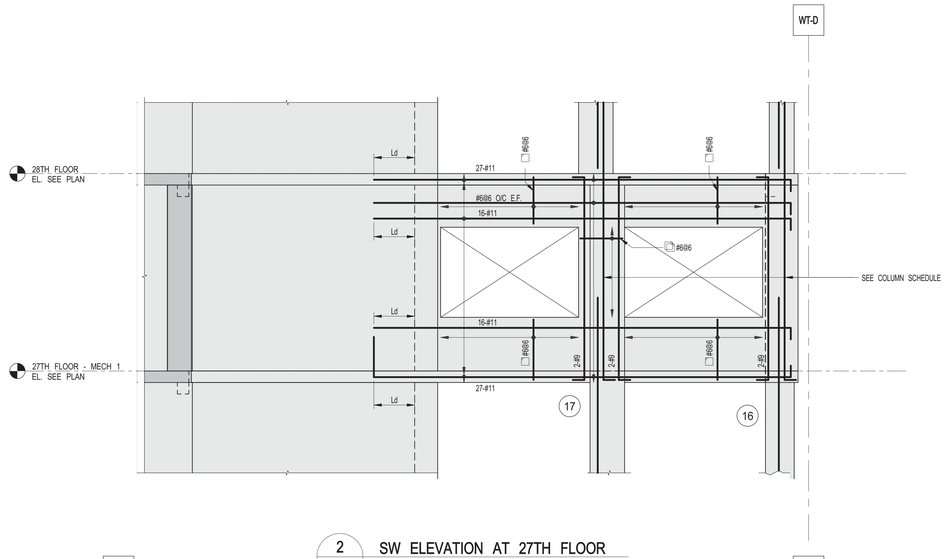

2 S-850 SW ELEVATION AT 27TH FLOOR
SCALE: 3/16" = 1'-0"

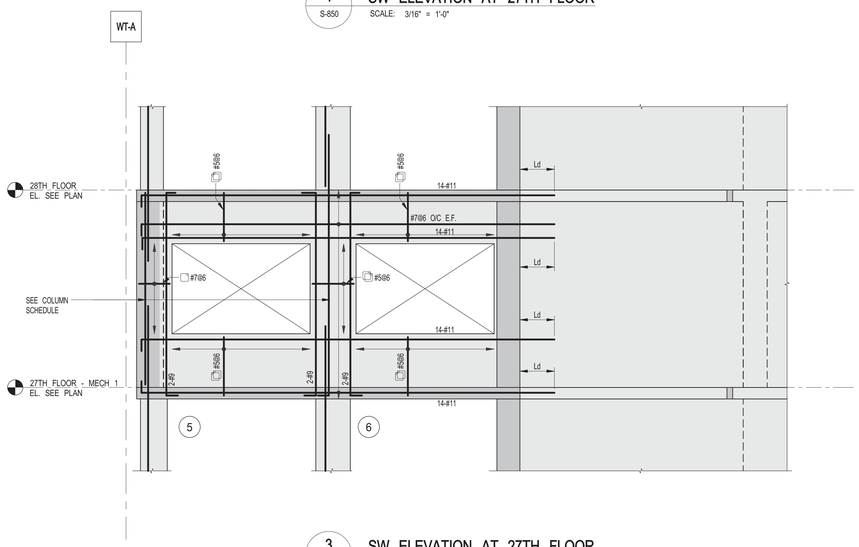

3 S-850 SW ELEVATION AT 27TH FLOOR
SCALE: 3/16" = 1'-0"

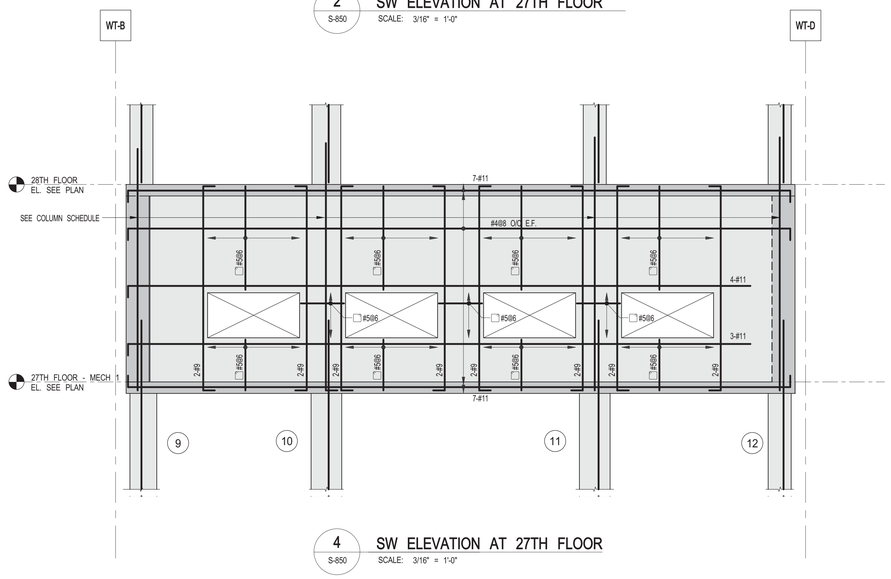

4 S-850 SW ELEVATION AT 27TH FLOOR
SCALE: 3/16" = 1'-0"

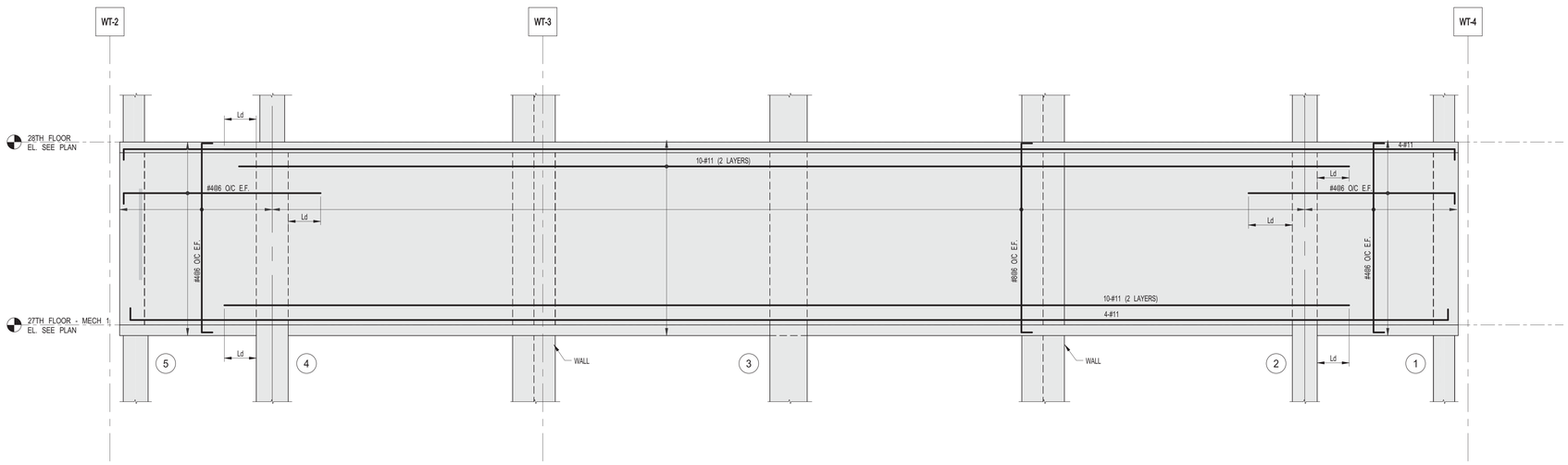

5 S-850 SW ELEVATION AT 27TH FLOOR
SCALE: 3/16" = 1'-0"

KEY PLAN:

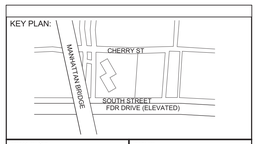

PROJECT NORTH | TRUE NORTH

DEVELOPER:
EXTELL DEVELOPMENT COMPANY
805 Third Ave, 7th Floor
New York, NY 10022
TEL: 212-712-6000 FAX: 212-712-6100

ARCHITECT OF RECORD:
AAI ARCHITECTS, P.C.
14 Wall Street, 2nd Floor
New York, NY 10005
TEL: 212-964-4040 FAX: 212-964-4090

INTERIOR DESIGNER:
MEYER DAVIS
180 Varick St, suite 404
New York, NY 10014
TEL: 212-627-5574

LANDSCAPE DESIGNER:
WEST 8 URBAN DESIGN & LANDSCAPE ARCHITECTURE P.C.
333 Hudson Street, Suite 905
New York, NY 10013
TEL: 212-285-0088 FAX: 212-285-0228

STRUCTURAL ENGINEERS:
WSP
228 East 45th Street
New York, NY 10017
TEL: 212-687-9888 FAX: 646-487-5501

MEP ENGINEERS:
ICOR ASSOCIATES, LLC
485 C Route 1 South, Suite 200
Iseline, NJ 08830
TEL: 908-272-3300 FAX: 908-272-4440

GEOTECHNICAL ENGINEERS:
LANGAN ENGINEERING & ENVIRONMENTAL SERVICES
21 Penn Plaza - 360 West 31st Street, 8th Floor
New York, NY 10001
TEL: 212.479.5400 FAX: 212.479.5444

No.	DESCRIPTION:	DATE:
1	CONCRETE BID PACKAGE	03-06-15
2	ISSUED FOR FILING	07-28-15

Discrepancies must be reported immediately to the Architect before proceeding. Only figured dimensions are to be used. Contractors must check all dimensions on site. This drawing is protected by copyright.

ALL DIMENSIONS ARE SHOWN IN IMPERIAL.

CONSULTANT:
WSP

PROJECT:
250 SOUTH STREET
NEW YORK, NY

DRAWING TITLE:
SHEARWALL ELEVATIONS OF OUTRIGGERS AT 27TH FLOOR

SEAL & SIGNATURE:
STATE OF NEW YORK
AHMAD RAHIMIAN
No. 065537
LICENSED PROFESSIONAL ENGINEER

DATE:	03/06/15
PROJECT No:	1302510
DRAWN: CAD	REV:
CHK: CL	
SCALE: 3/16" = 1'-0"	
DWG No:	S-850.00
DOB PAGE No:	of

DOB EMPLOYEE STAMP:
Damian Titus
Buildings
APPROVED
Under Directive 2 of 1975
AMENDED APPLICATION
Date: 10/08/2015
NYC Development Hub

DOB B-SCAN:

30" x 42" Arch E1 - SHEET SIZE

FILE NAME:
PLOT DATE:

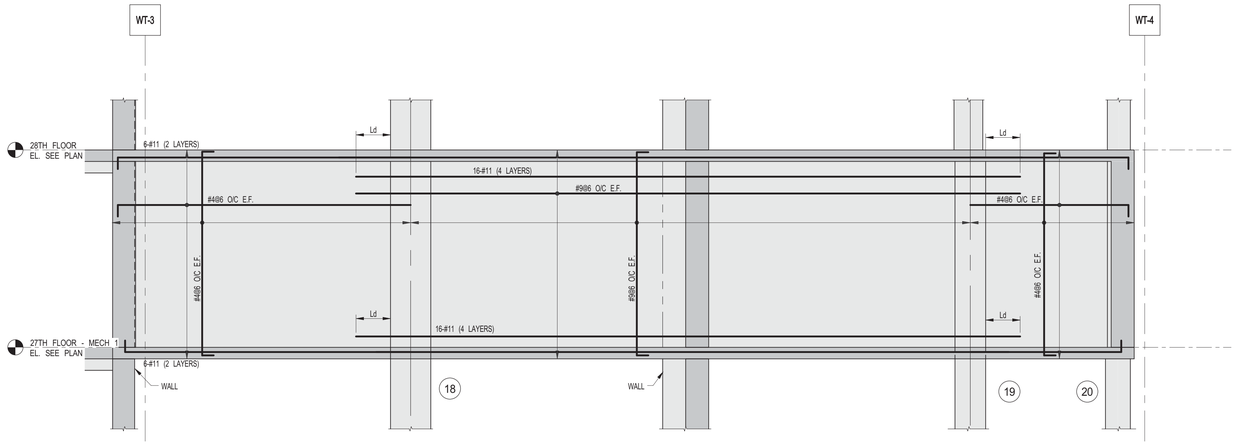

1 S-851 SW ELEVATION AT 27TH FLOOR
SCALE: 3/16" = 1'-0"

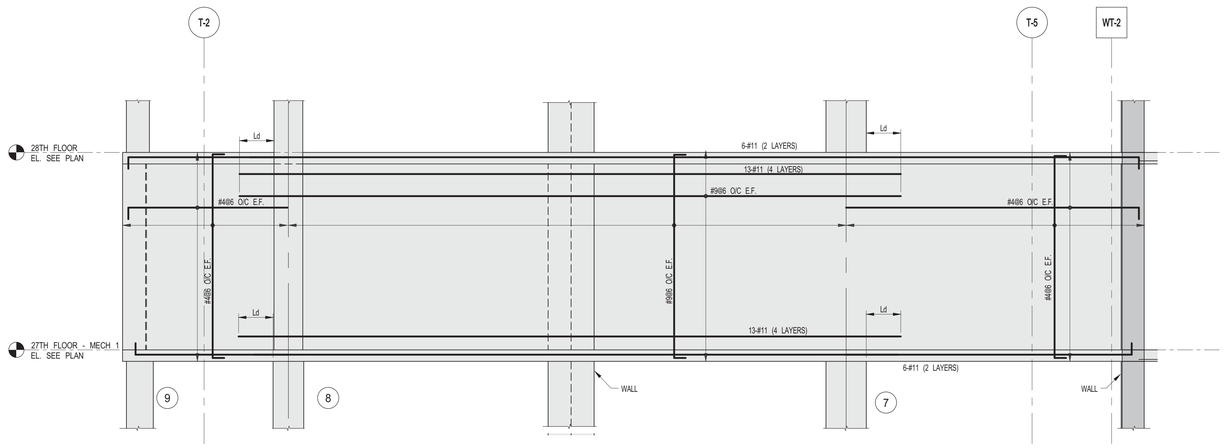

2 S-851 SW ELEVATION AT 27TH FLOOR
SCALE: 3/16" = 1'-0"

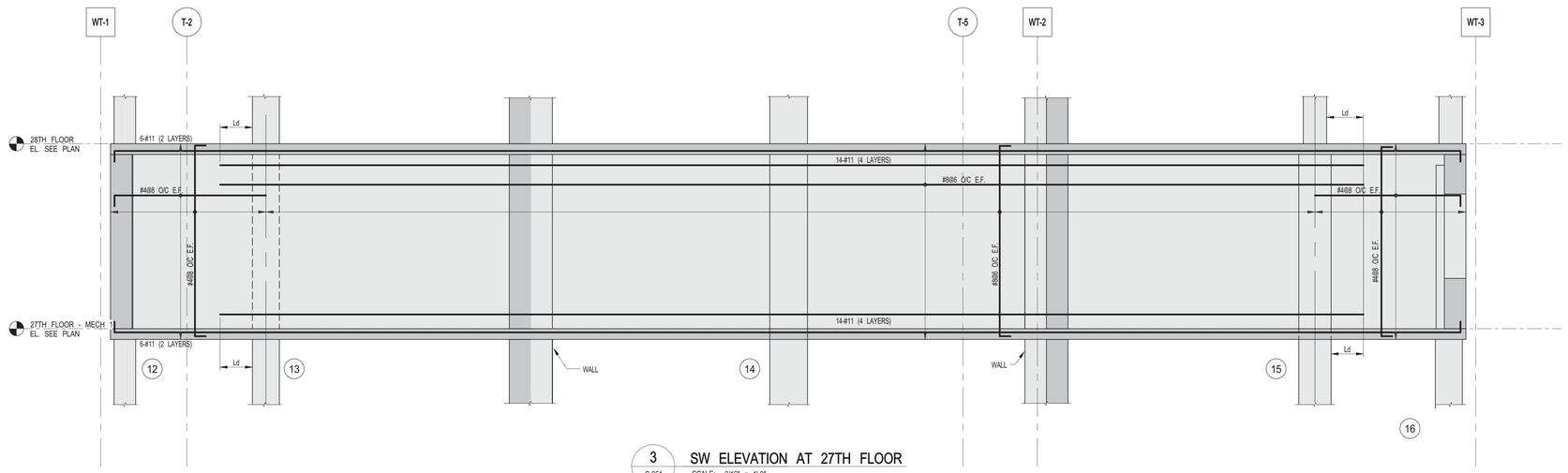

3 S-851 SW ELEVATION AT 27TH FLOOR
SCALE: 3/16" = 1'-0"

KEY PLAN:

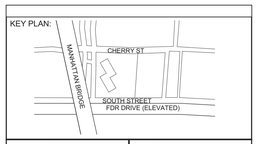

PROJECT NORTH

TRUE NORTH

DEVELOPER:
EXTELL DEVELOPMENT COMPANY
805 Third Ave, 7th Floor
New York, NY 10022
TEL: 212-712-6000 FAX: 212-712-6100

ARCHITECT OF RECORD:
AAI ARCHITECTS, P.C.
14 Wall Street, 2nd Floor
New York, NY 10005
TEL: 212-964-4040 FAX: 212-964-4090

INTERIOR DESIGNER:
MEYER DAVIS
180 Varick St, suite 404
New York, NY 10014
TEL: 212-627-5574

LANDSCAPE DESIGNER:
WEST 8 URBAN DESIGN & LANDSCAPE ARCHITECTURE P.C.
333 Hudson Street, Suite 905
New York, NY 10013
TEL: 212-285-0088 FAX: 212-285-0228

STRUCTURAL ENGINEERS:
WSP
228 East 45th Street
New York, NY 10017
TEL: 212-687-9888 FAX: 646-487-5501

MEP ENGINEERS:
ICOR ASSOCIATES, LLC
485 C Route 1 South, Suite 200
Iseline, NJ 08830
TEL: 908-272-3300 FAX: 908-272-4440

GEOTECHNICAL ENGINEERS:
LANGAN ENGINEERING & ENVIRONMENTAL SERVICES
21 Penn Plaza - 360 West 31st Street, 8th Floor
New York, NY 10001
TEL: 212.479.5400 FAX: 212.479.5444

No.	DESCRIPTION:	DATE:
1	CONCRETE BID PACKAGE	03-06-15
2	ISSUED FOR FILING	07-28-15

Discrepancies must be reported immediately to the Architect before proceeding. Only figured dimensions are to be used. Contractors must check all dimensions on site. This drawing is protected by copyright.

ALL DIMENSIONS ARE SHOWN IN IMPERIAL.

CONSULTANT:
WSP

PROJECT:
250 SOUTH STREET
NEW YORK, NY

DRAWING TITLE:
SHEARWALL ELEVATIONS OF OUTRIGGERS AT 27TH FLOOR 2

SEAL & SIGNATURE:
STATE OF NEW YORK
AHMAD RAHIMIAN
No. 065537
LICENSED PROFESSIONAL ENGINEER

DATE:	03/06/15
PROJECT No:	1302510
DRAWN: CAD	REV:
CHK: CL	
SCALE: 3/16" = 1'-0"	
DWG No:	S-851.00
DOB PAGE No:	of

DOB EMPLOYEE STAMP:
Damian Titus
NYC Buildings
APPROVED
Under Directive 2 of 1975
AMENDED APPLICATION
Date: 10/08/2015
NYC Development Hub

DOB B-SCAN:

DEPT OF BLDGS121185539 Job Number
E 560494949119 Scan Code
30" x 42" Arch E1 - SHEET SIZE

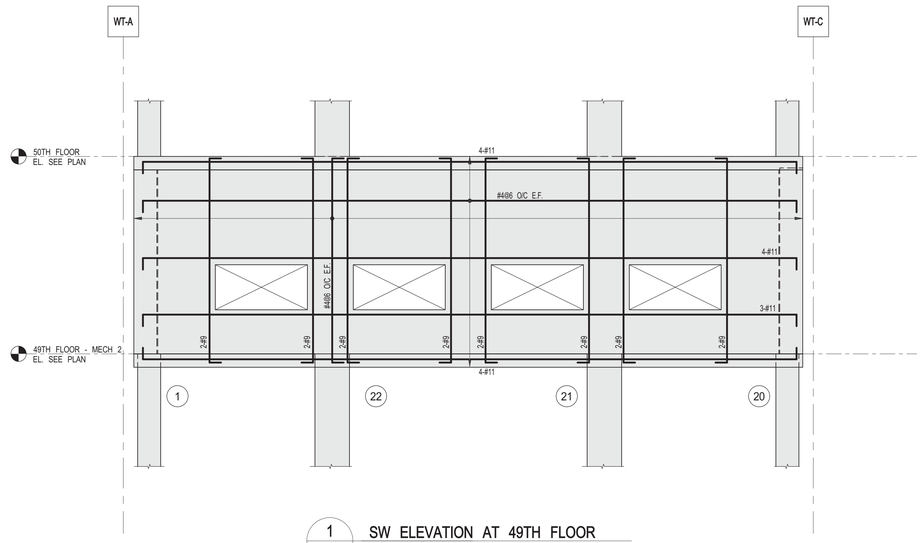

1 S-852 SW ELEVATION AT 49TH FLOOR
SCALE: 3/16" = 1'-0"

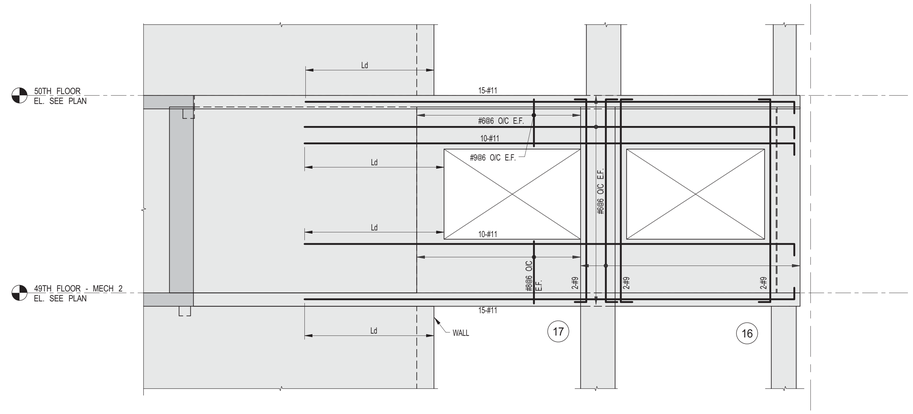

2 S-852 SW ELEVATION AT 49TH FLOOR
SCALE: 3/16" = 1'-0"

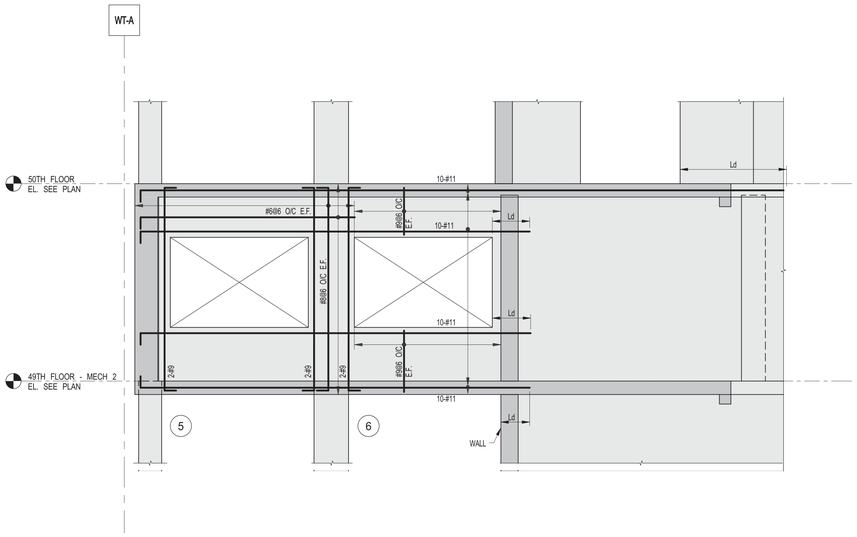

3 S-852 SW ELEVATION AT 49TH FLOOR
SCALE: 3/16" = 1'-0"

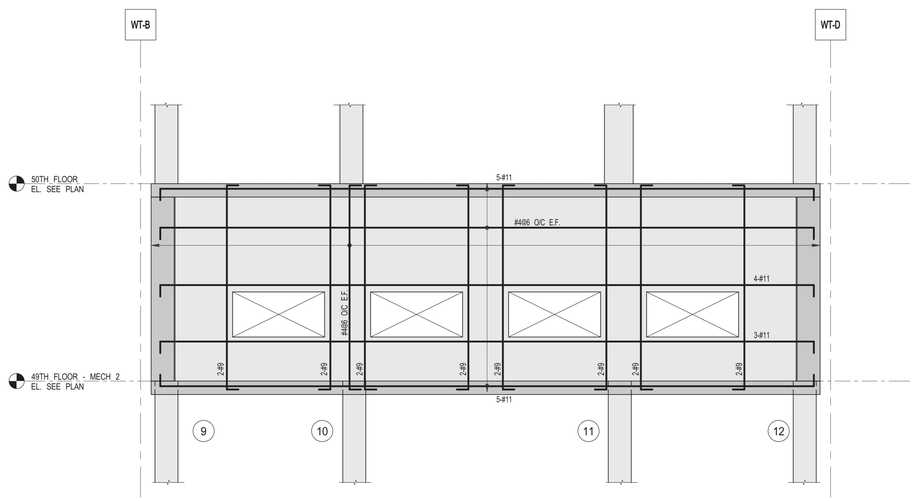

4 S-852 SW ELEVATION AT 49TH FLOOR
SCALE: 3/16" = 1'-0"

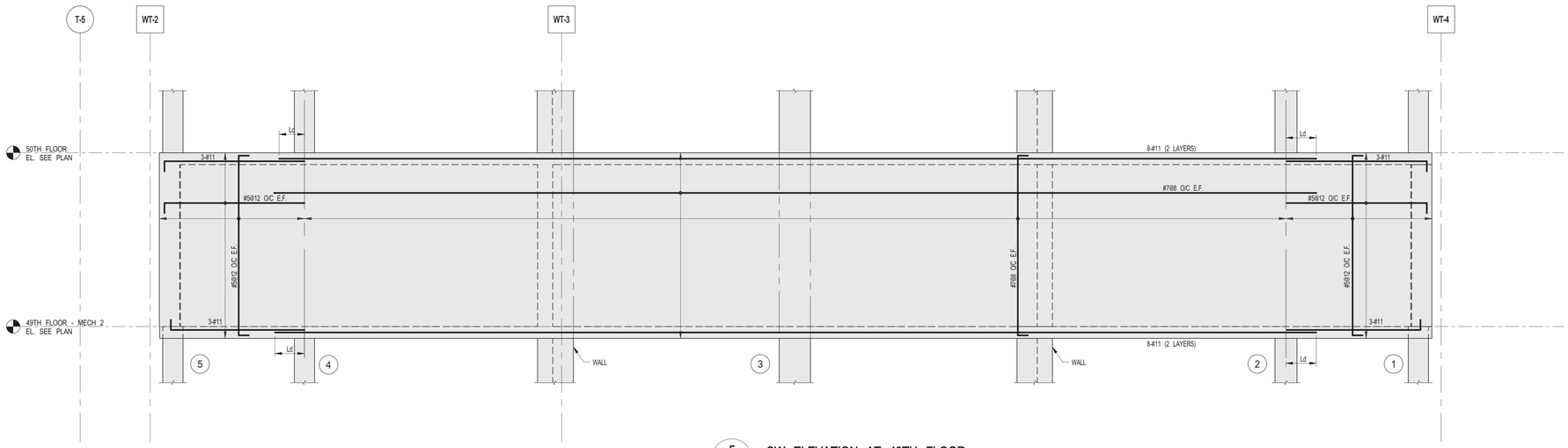

5 S-852 SW ELEVATION AT 49TH FLOOR
SCALE: 3/16" = 1'-0"

FILE NAME:
PLOT DATE:

KEY PLAN:

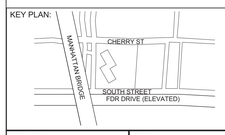

PROJECT NORTH

TRUE NORTH

DEVELOPER:
EXTELL DEVELOPMENT COMPANY
805 Third Ave, 7th Floor
New York, NY 10022
TEL: 212-712-6000 FAX: 212-712-6100

ARCHITECT OF RECORD:
AAI ARCHITECTS, P.C.
14 Wall Street, 2nd Floor
New York, NY 10005
TEL: 212-964-4040 FAX: 212-964-4090

INTERIOR DESIGNER:
MEYER DAVIS
180 Varick St, suite 404
New York, NY 10014
TEL: 212-627-5574

LANDSCAPE DESIGNER:
WEST 8 URBAN DESIGN & LANDSCAPE ARCHITECTURE P.C.
333 Hudson Street, Suite 905
New York, NY 10013
TEL: 212-285-0088 FAX: 212-285-0228

STRUCTURAL ENGINEERS:
WSP
228 East 45th Street
New York, NY 10017
TEL: 212-687-9888 FAX: 646-487-5501

MEP ENGINEERS:
ICOR ASSOCIATES, LLC
485 C Route 1 South, Suite 200
Iseline, NJ 08830
TEL: 908-272-3300 FAX: 908-272-4440

GEOTECHNICAL ENGINEERS:
LANGAN ENGINEERING & ENVIRONMENTAL SERVICES
21 Penn Plaza - 360 West 31st Street, 8th Floor
New York, NY 10001
TEL: 212.479.5400 FAX: 212.479.5444

No.	DESCRIPTION:	DATE:
1	CONCRETE BID PACKAGE	03-06-15
2	ISSUED FOR FILING	07-28-15

Discrepancies must be reported immediately to the Architect before proceeding. Only figured dimensions are to be used. Contractors must check all dimensions on site. This drawing is protected by copyright.

ALL DIMENSIONS ARE SHOWN IN IMPERIAL.

CONSULTANT:
WSP

PROJECT:
250 SOUTH STREET
NEW YORK, NY

DRAWING TITLE:
SHEARWALL ELEVATIONS OF OUTRIGGERS AT 49TH FLOOR

SEAL & SIGNATURE:

DATE:	03/06/15
PROJECT No:	1302510
DRAWN: CAD	REV:
CHK: CL	
SCALE: 3/16" = 1'-0"	
DWG No:	**S-852.00**
DOB PAGE No: 01	

DOB EMPLOYEE STAMP:

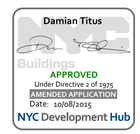

DOB B-SCAN:

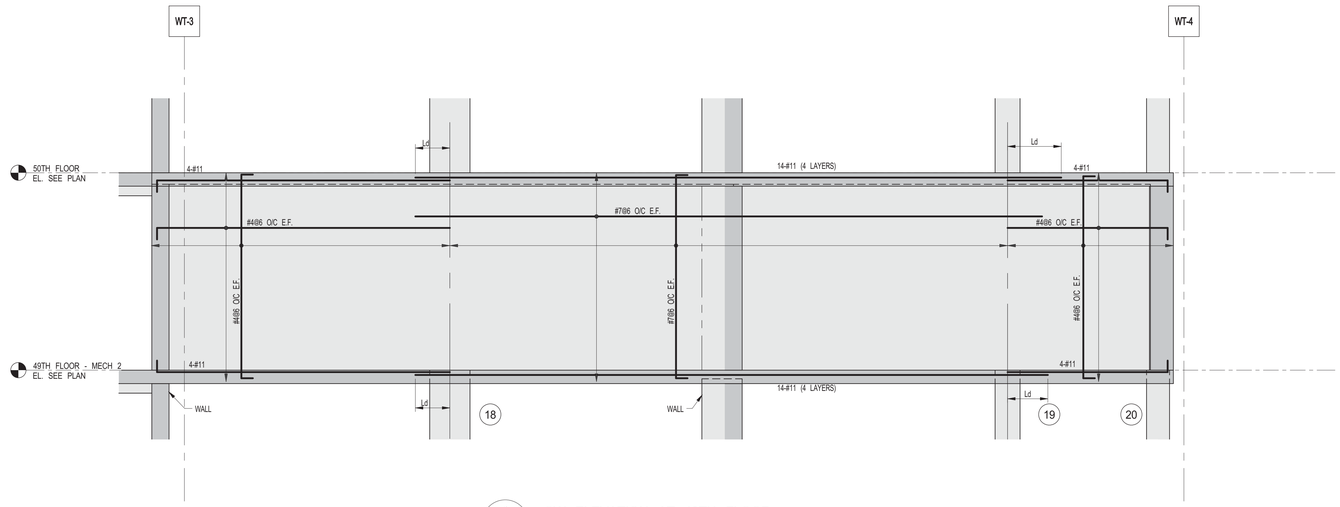

1 S-853 SW ELEVATION AT 49TH FLOOR
SCALE: 3/16" = 1'-0"

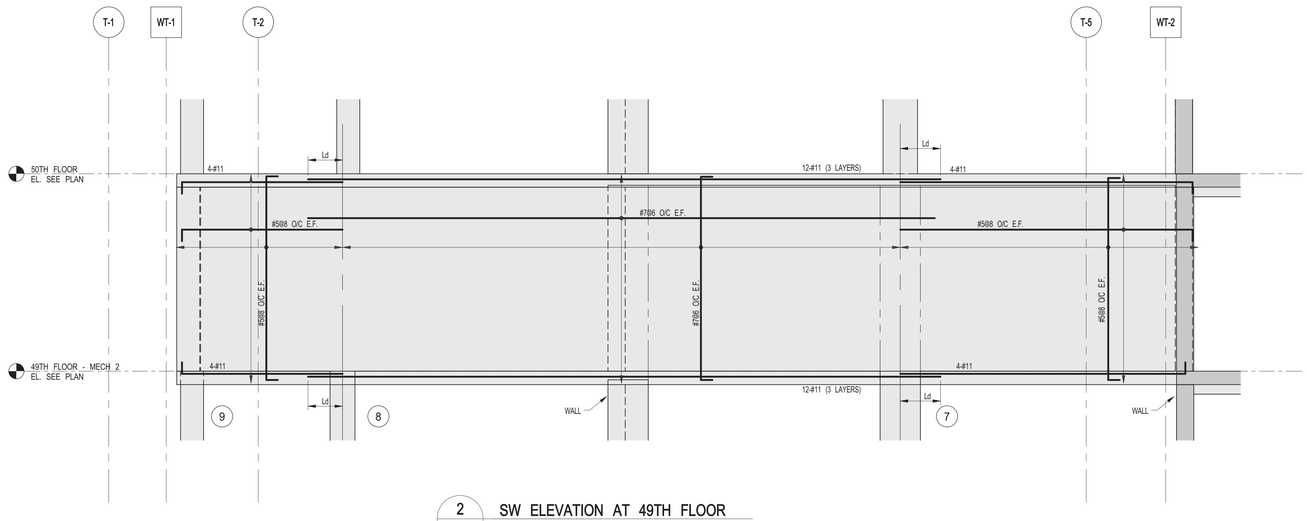

2 S-853 SW ELEVATION AT 49TH FLOOR
SCALE: 3/16" = 1'-0"

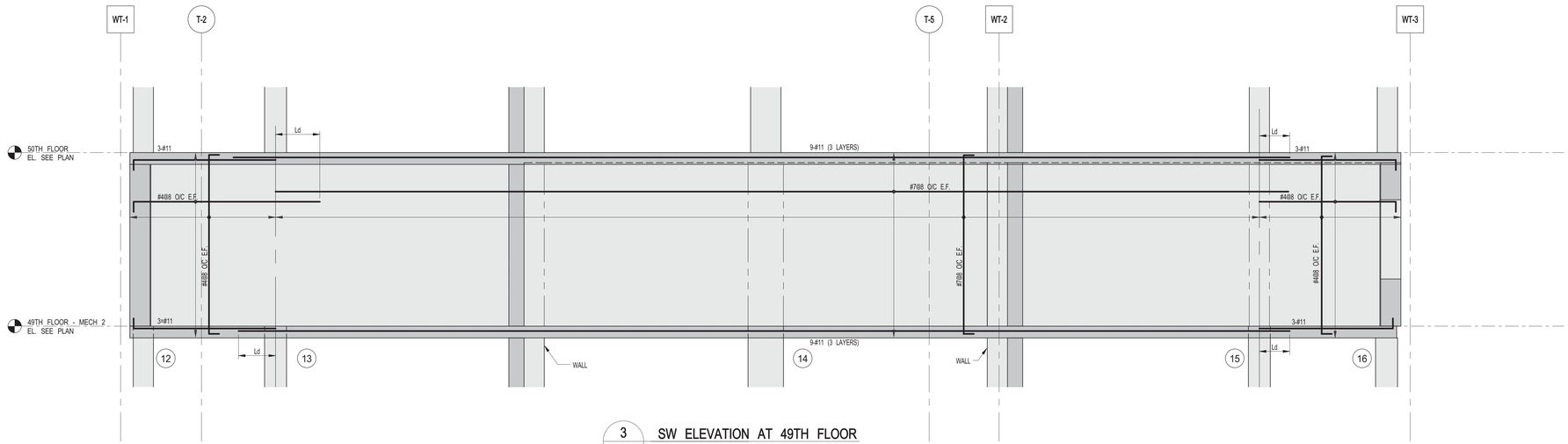

3 S-853 SW ELEVATION AT 49TH FLOOR
SCALE: 3/16" = 1'-0"

KEY PLAN:

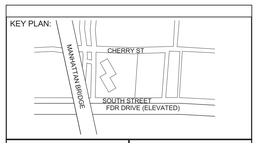

PROJECT NORTH

TRUE NORTH

DEVELOPER:
EXTELL DEVELOPMENT COMPANY
805 Third Ave, 7th Floor
New York, NY 10022
TEL: 212-712-6000 FAX: 212-712-6100

ARCHITECT OF RECORD:
AAI ARCHITECTS, P.C.
14 Wall Street, 2nd Floor
New York, NY 10005
TEL: 212-964-4040 FAX: 212-964-4090

INTERIOR DESIGNER:
MEYER DAVIS
180 Varick St, suite 404
New York, NY 10014
TEL: 212-627-5574

LANDSCAPE DESIGNER:
WEST 8 URBAN DESIGN & LANDSCAPE ARCHITECTURE P.C.
333 Hudson Street, Suite 905
New York, NY 10013
TEL: 212-285-0088 FAX: 212-285-0228

STRUCTURAL ENGINEERS:
WSP
228 East 45th Street
New York, NY 10017
TEL: 212-687-9888 FAX: 646-487-5501

MEP ENGINEERS:
ICOR ASSOCIATES, LLC
485 C Route 1 South, Suite 200
Iseline, NJ 08830
TEL: 908-272-3300 FAX: 908-272-4440

GEOTECHNICAL ENGINEERS:
LANGAN ENGINEERING & ENVIRONMENTAL SERVICES
21 Penn Plaza - 360 West 31st Street, 8th Floor
New York, NY 10001
TEL: 212.479.5400 FAX: 212.479.5444

No.	DESCRIPTION:	DATE:
1	CONCRETE BID PACKAGE	03-06-15
2	ISSUED FOR FILING	07-28-15

Discrepancies must be reported immediately to the Architect before proceeding. Only figured dimensions are to be used. Contractors must check all dimensions on site. This drawing is protected by copyright.

ALL DIMENSIONS ARE SHOWN IN IMPERIAL.

CONSULTANT:
WSP

PROJECT:
250 SOUTH STREET
NEW YORK, NY

DRAWING TITLE:
SHEARWALL ELEVATIONS OF OUTRIGGERS AT 49TH FLOOR 2

SEAL & SIGNATURE:

DATE:	03/06/15
PROJECT No:	1302510
DRAWN: CAD	REV:
CHK: CL	
SCALE: 3/16" = 1'-0"	
DWG No:	S-853.00
DOB PAGE No:	of

DOB EMPLOYEE STAMP:

DOB B-SCAN:

30" x 42" Arch E1 - SHEET SIZE

FILE NAME:
PLOT DATE:

DEPT OF BLDGS121305629 Job Number
E:5452:739589 Scan Code

30" x 42" Arch E1 - SHEET SIZE

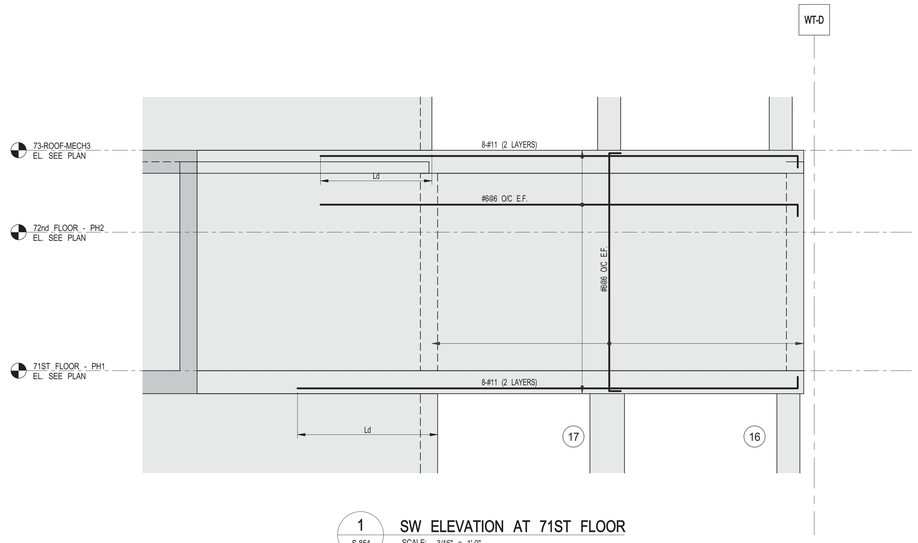

1 S-854 **SW ELEVATION AT 71ST FLOOR**
SCALE: 3/16" = 1'-0"

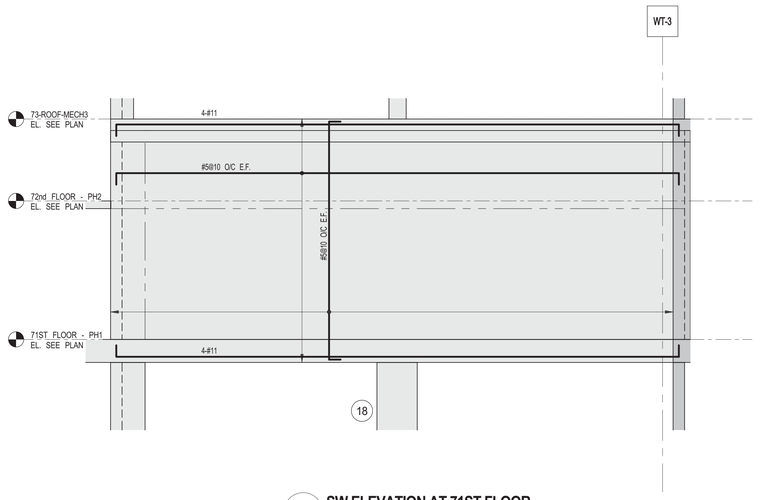

2 **SW ELEVATION AT 71ST FLOOR**
3/16" = 1'-0"

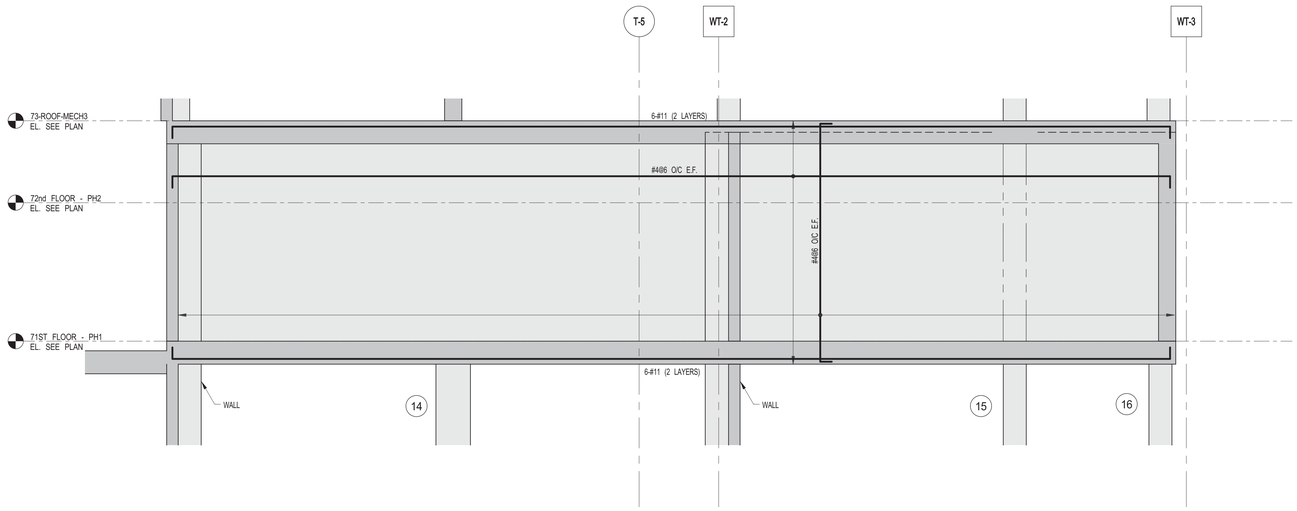

3 S-854 **SW ELEVATION AT 71ST FLOOR**
SCALE: 3/16" = 1'-0"

FILE NAME:
PLOT DATE:

KEY PLAN:

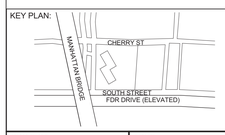

PROJECT NORTH

TRUE NORTH

DEVELOPER:
EXTELL DEVELOPMENT COMPANY
805 Third Ave, 7th Floor
New York, NY 10022
TEL: 212-712-6000 FAX: 212-712-6100

ARCHITECT OF RECORD:
AAI ARCHITECTS, P.C.
14 Wall Street, 2nd Floor
New York, NY 10005
TEL: 212-964-4040 FAX: 212-964-4090

INTERIOR DESIGNER:
MEYER DAVIS
180 Varick St, suite 404
New York, NY 10014
TEL: 212-627-5574

LANDSCAPE DESIGNER:
WEST 8 URBAN DESIGN & LANDSCAPE ARCHITECTURE P.C.
333 Hudson Street, Suite 905
New York, NY 10013
TEL: 212-285-0088 FAX: 212-285-0228

STRUCTURAL ENGINEERS:
WSP
228 East 45th Street
New York, NY 10017
TEL: 212-687-9888 FAX: 646-487-5501

MEP ENGINEERS:
ICOR ASSOCIATES, LLC
485 C Route 1 South, Suite 200
Iseline, NJ 08830
TEL: 908-272-3300 FAX: 908-272-4440

GEOTECHNICAL ENGINEERS:
LANGAN ENGINEERING & ENVIRONMENTAL SERVICES
21 Penn Plaza - 360 West 31st Street, 8th Floor
New York, NY 10001
TEL: 212.479.5400 FAX: 212.479.5444

No.	DESCRIPTION:	DATE:
1	CONCRETE BID PACKAGE	03-06-15
2	ISSUED FOR FILING	07-28-15

Discrepancies must be reported immediately to the Architect before proceeding. Only figured dimensions are to be used. Contractors must check all dimensions on site. This drawing is protected by copyright.

ALL DIMENSIONS ARE SHOWN IN IMPERIAL.

CONSULTANT:
WSP

PROJECT:
250 SOUTH STREET
NEW YORK, NY

DRAWING TITLE:
SHEARWALL ELEVATIONS OF OUTRIGGERS AT 71ST FLOOR

SEAL & SIGNATURE:
STATE OF NEW YORK · AHMAD RAHIMIAN · No. 085527 · LICENSED PROFESSIONAL ENGINEER

DATE: 03/06/15
PROJECT No: 1302510
DRAWN: CAD REV:
CHK: CL
SCALE: 3/16" = 1'-0"
DWG No: **S-854.00**
DOB PAGE No: 01

DOB EMPLOYEE STAMP:
Damian Titus
NYC Buildings
APPROVED
Under Directive 2 of 1975
AMENDED APPLICATION
Date: 10/08/2015
NYC Development Hub

DOB B-SCAN:

DEPT OF BLDGS 121185528 Job Number
ES306875779 Scan Code

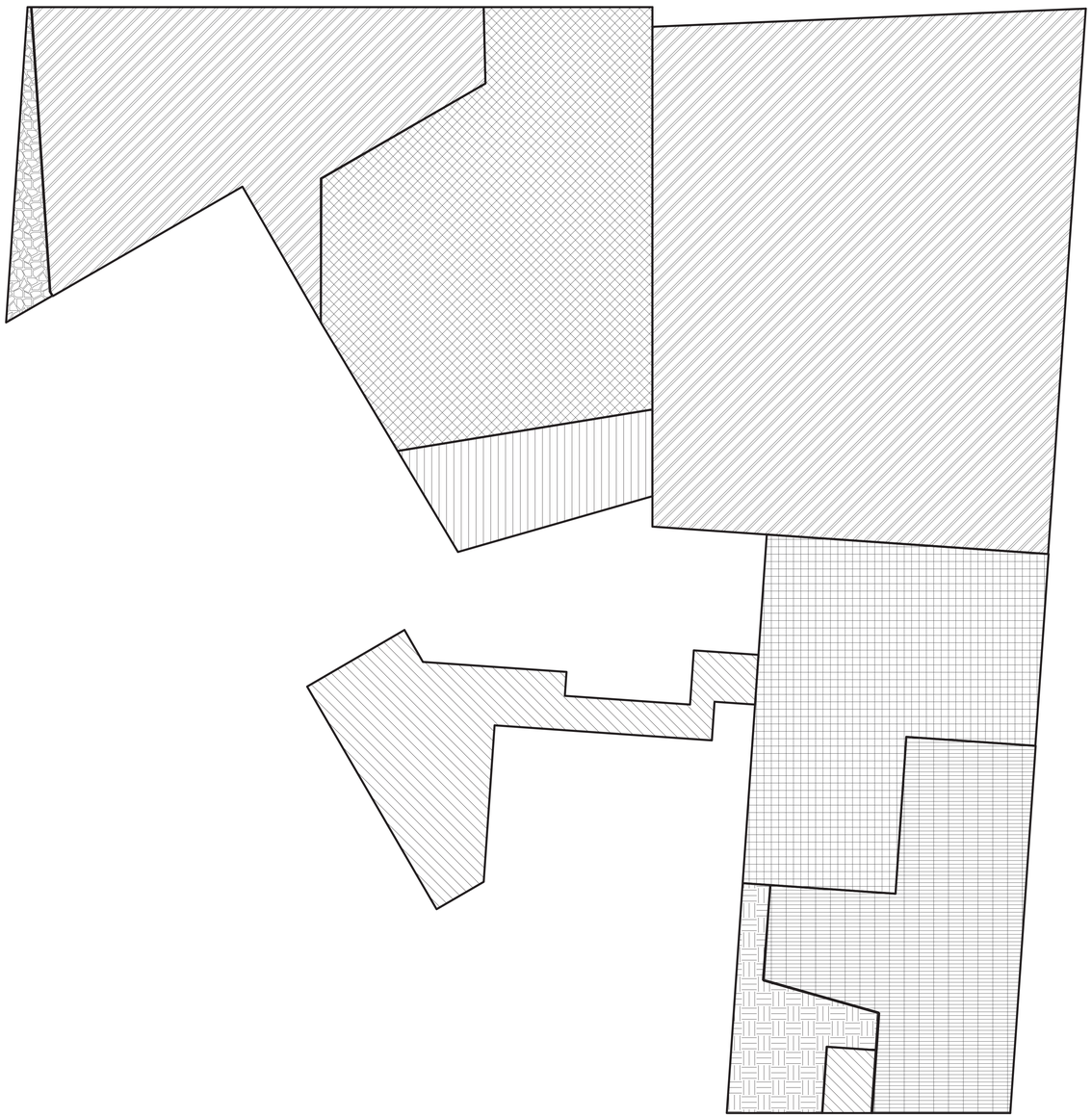

1 S-900 1ST FLOOR LOADING DIAGRAM
SCALE: 1/16" = 1'-0"

GROUND FLOOR LOADING SCHEDULE (STEEL FRAMED AREA) (NOTE A)

AREA	SUPERIMPOSED DEAD LOAD					(NOTE B) LIVE LOAD	DESCRIPTION	REMARKS
	FINISH/FILL	BUILT-UP	MISC.	MEP +CEILING	PARTITION			
	lbs/sq.ft	lbs/sq.ft	lbs/sq.ft	lbs/sq.ft	lbs/sq.ft	lbs/sq.ft		
	12		10	40	20	100	RETAIL AREA	
		152		40		600	ENTRANCE DRIVEWAY (NOTE C)	
		480				150	SUMAC MEADER (NOTE C)	
	10		10	40		100	CORRIDOR	
			10	40	10	110	PARKING	
			10	40		600	TRUCK LOADING (NOTE C)	
				40	20	100	STORAGE	
		480				150	LANDSCAPE (NOTE C)	
				40	20	150	MECH. ROOM	

NOTES:
A. DEAD LOAD BASED ON SLAB CONSTRUCTION AND FRAMING SELF-WEIGHT AS INDICATED ON THE CORRES|PONDING FRAMING
B. LIVE LOAD REDUCTION IS CONSIDERED BASED ON NYC BUILDING CODE.
C. SEE TYPICAL SLAB ON METAL DECK DETAIL WHERE LIVE LOAD + SUPERIMPOSED DEAD LOAD LARGER THAN 400 PSF.

KEY PLAN:

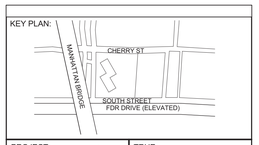

PROJECT NORTH

TRUE NORTH

DEVELOPER:
EXTELL DEVELOPMENT COMPANY
805 Third Ave, 7th Floor
New York, NY 10022
TEL: 212-712-6000 FAX: 212-712-6100

ARCHITECT OF RECORD:
AAI ARCHITECTS, P.C.
14 Wall Street, 2nd Floor
New York, NY 10005
TEL: 212-964-4040 FAX: 212-964-4090

INTERIOR DESIGNER:
MEYER DAVIS
180 Varick St, suite 404
New York, NY 10014
TEL: 212-627-5574

LANDSCAPE DESIGNER:
WEST 8 URBAN DESIGN & LANDSCAPE ARCHITECTURE P.C.
333 Hudson Street, Suite 905
New York, NY 10013
TEL: 212-285-0088 FAX: 212-285-0228

STRUCTURAL ENGINEERS:
WSP
228 East 45th Street
New York, NY 10017
TEL: 212-687-9888 FAX: 646-487-5501

MEP ENGINEERS:
ICOR ASSOCIATES, LLC
485 C Route 1 South, Suite 200
Iseline, NJ 08830
TEL: 908-272-3300 FAX: 908-272-4440

GEOTECHNICAL ENGINEERS:
LANGAN ENGINEERING & ENVIRONMENTAL SERVICES
21 Penn Plaza - 360 West 31st Street, 8th Floor
New York, NY 10001
TEL: 212.479.5400 FAX: 212.479.5444

No.	DESCRIPTION:	DATE:
1	50% CONSTRUCTION DOCUMENTS	04-08-15
2	ISSUED FOR FILING	07-28-15

Discrepancies must be reported immediately to the Architect before proceeding. Only figured dimensions are to be used. Contractors must check all dimensions on site. This drawing is protected by copyright.

ALL DIMENSIONS ARE SHOWN IN IMPERIAL.

CONSULTANT:
WSP

PROJECT:
250 SOUTH STREET
NEW YORK, NY

DRAWING TITLE:
1ST FLOOR LOADING DIAGRAM

SEAL & SIGNATURE:

DATE:	04/08/15
PROJECT No:	1302510
DRAWN: CAD	REV:
CHK: CL	
SCALE: As indicated	
DWG No:	S-900.00
DOB PAGE No:	of

DOB EMPLOYEE STAMP:

DOB B-SCAN:

30" x 42" Arch E1 - SHEET SIZE

FILE NAME:
PLOT DATE:

DEPT OF BLDGS121185528 Job Number
ES039876271 Scan Code

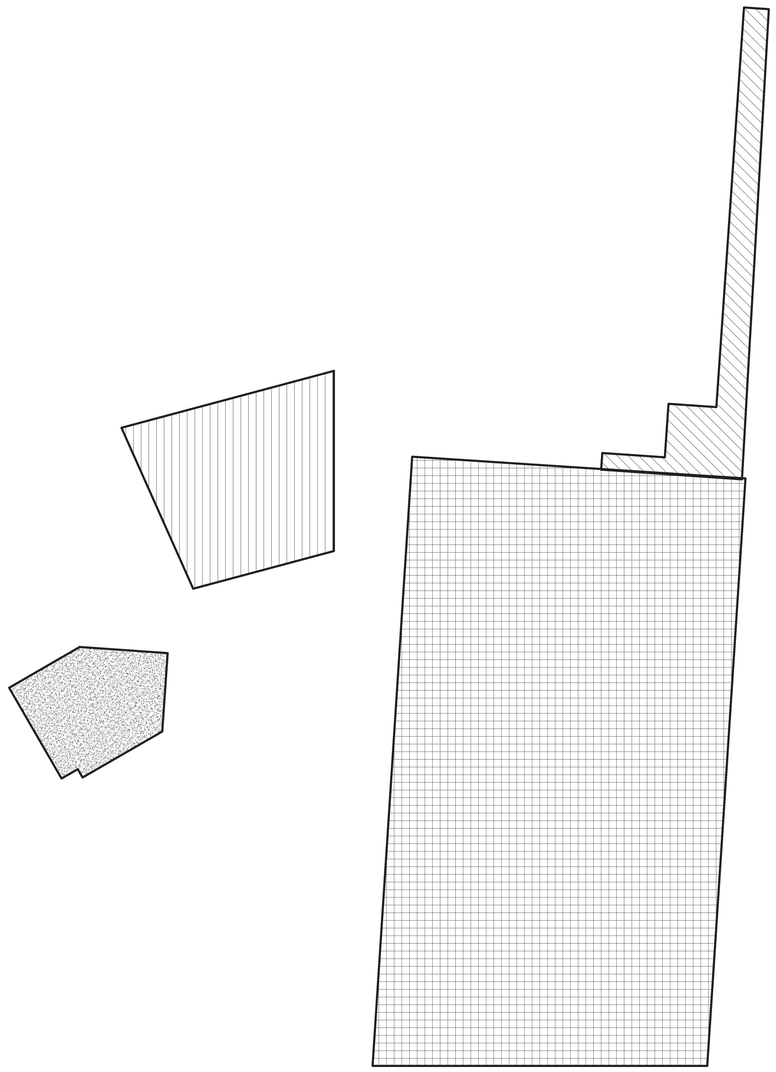

1 S-901 2ND FLOOR LOADING DIAGRAM
SCALE: 1/16" = 1'-0"

2ND FLOOR LOADING SCHEDULE (STEEL FRAMED AREA) (NOTE A)

AREA	SUPERIMPOSED DEAD LOAD					(NOTE B) LIVE LOAD	DESCRIPTION	REMARKS
	FINISH/FILL	BUILT-UP	MISC.	MEP +CEILING	PARTITION			
	lbs/sq.ft	lbs/sq.ft	lbs/sq.ft	lbs/sq.ft	lbs/sq.ft	lbs/sq.ft		
		480				150	SUMAC MEADER (NOTE C)	
				40	20	150	MECH. ROOM	
	10		10	40		100	CORRIDOR	
			10	40	10	110	PARKING	

NOTES:
A. DEAD LOAD BASED ON SLAB CONSTRUCTION AND FRAMING SELF-WEIGHT AS INDICATED ON THE CORRES|PONDING FRAMING
B. LIVE LOAD REDUCTION IS CONSIDERED BASED ON NYC BUILDING CODE.
C. SEE TYPICAL SLAB ON METAL DECK DETAIL WHERE LIVE LOAD + SUPERIMPOSED DEAD LOAD LARGER THAN 400 PSF.

KEY PLAN:

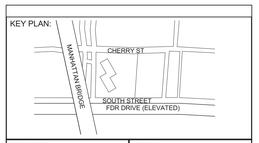

PROJECT NORTH

TRUE NORTH

DEVELOPER:
EXTELL DEVELOPMENT COMPANY
805 Third Ave, 7th Floor
New York, NY 10022
TEL: 212-712-6000 FAX: 212-712-6100

ARCHITECT OF RECORD:
AAI ARCHITECTS, P.C.
14 Wall Street, 2nd Floor
New York, NY 10005
TEL: 212-964-4040 FAX: 212-964-4090

INTERIOR DESIGNER:
MEYER DAVIS
180 Varick St, suite 404
New York, NY 10014
TEL: 212-627-5574

LANDSCAPE DESIGNER:
WEST 8 URBAN DESIGN & LANDSCAPE ARCHITECTURE P.C.
333 Hudson Street, Suite 905
New York, NY 10013
TEL: 212-285-0088 FAX: 212-285-0228

STRUCTURAL ENGINEERS:
WSP
228 East 45th Street
New York, NY 10017
TEL: 212-687-9888 FAX: 646-487-5501

MEP ENGINEERS:
ICOR ASSOCIATES, LLC
485 C Route 1 South, Suite 200
Iseline, NJ 08830
TEL: 908-272-3300 FAX: 908-272-4440

GEOTECHNICAL ENGINEERS:
LANGAN ENGINEERING & ENVIRONMENTAL SERVICES
21 Penn Plaza - 360 West 31st Street, 8th Floor
New York, NY 10001
TEL: 212.479.5400 FAX: 212.479.5444

No.	DESCRIPTION:	DATE:
1	50% CONSTRUCTION DOCUMENTS	04-08-15
2	ISSUED FOR FILING	07-28-15

Discrepancies must be reported immediately to the Architect before proceeding. Only figured dimensions are to be used. Contractors must check all dimensions on site. This drawing is protected by copyright.

ALL DIMENSIONS ARE SHOWN IN IMPERIAL.

CONSULTANT:
WSP

PROJECT:
250 SOUTH STREET
NEW YORK, NY

DRAWING TITLE:
2ND FLOOR LOADING DIAGRAM

SEAL & SIGNATURE:

DATE:	04/08/15
PROJECT No:	1302510
DRAWN: CAD	REV:
CHK: CL	
SCALE: As indicated	
DWG No:	S-901.00
DOB PAGE No:	of

DOB EMPLOYEE STAMP:

DOB B-SCAN:

30" x 42" Arch E1 - SHEET SIZE

FILE NAME:
PLOT DATE:

DEPT OF BLDGS 121185528 Job Number
ES103690234 Scan Code

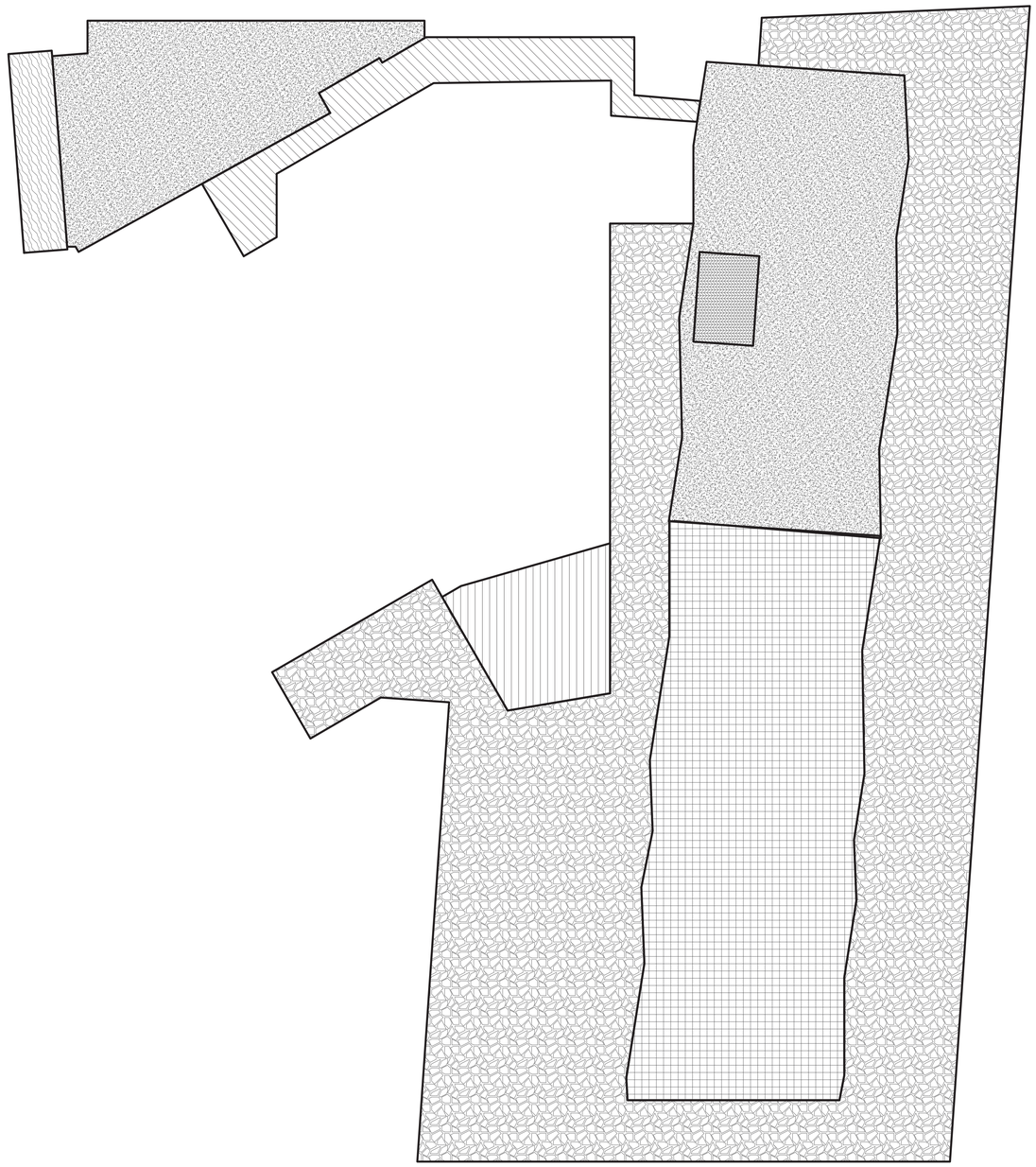

1
S-902
3RD FLOOR LOADING DIAGRAM
SCALE: 1/16" = 1'-0"

3RD FLOOR LOADING SCHEDULE (STEEL FRAMED AREA) (NOTE A)

AREA	SUPERIMPOSED DEAD LOAD					(NOTE B) LIVE LOAD	DESCRIPTION	REMARKS
	FINISH/FILL	BUILT-UP	MISC.	MEP +CEILING	PARTITION			
	lbs/sq.ft	lbs/sq.ft	lbs/sq.ft	lbs/sq.ft	lbs/sq.ft	lbs/sq.ft		
				40	20	150	MECH. ROOM	
		780		40		600	TRANSFORMER VAULT (NOTE C)	
	10		10	40		100	CORRIDOR	
		480				150	SUMAC MEADER (NOTE C)	
			10	40	10	110	PARKING	
		480				150	LANDSCAPE (NOTE C)	
		190		40	20	1250	FIRE TANK (NOTE C)	

NOTES:
A. DEAD LOAD BASED ON SLAB CONSTRUCTION AND FRAMING SELF-WEIGHT AS INDICATED ON THE CORRES|PONDING FRAMING
B. LIVE LOAD REDUCTION IS CONSIDERED BASED ON NYC BUILDING CODE.
C. SEE TYPICAL SLAB ON METAL DECK DETAIL WHERE LIVE LOAD + SUPERIMPOSED DEAD LOAD LARGER THAN 400 PSF.

KEY PLAN:

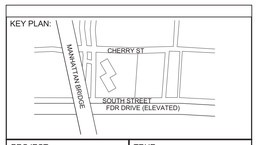

PROJECT NORTH

TRUE NORTH

DEVELOPER:
EXTELL DEVELOPMENT COMPANY
805 Third Ave, 7th Floor
New York, NY 10022
TEL: 212-712-6000 FAX: 212-712-6100

ARCHITECT OF RECORD:
AAI ARCHITECTS, P.C.
14 Wall Street, 2nd Floor
New York, NY 10005
TEL: 212-964-4040 FAX: 212-964-4090

INTERIOR DESIGNER:
MEYER DAVIS
180 Varick St, suite 404
New York, NY 10014
TEL: 212-627-5574

LANDSCAPE DESIGNER:
WEST 8 URBAN DESIGN & LANDSCAPE ARCHITECTURE P.C.
333 Hudson Street, Suite 905
New York, NY 10013
TEL: 212-285-0088 FAX: 212-285-0228

STRUCTURAL ENGINEERS:
WSP
228 East 45th Street
New York, NY 10017
TEL: 212-687-9888 FAX: 646-487-5501

MEP ENGINEERS:
ICOR ASSOCIATES, LLC
485 C Route 1 South, Suite 200
Iseline, NJ 08830
TEL: 908-272-3300 FAX: 908-272-4440

GEOTECHNICAL ENGINEERS:
LANGAN ENGINEERING & ENVIRONMENTAL SERVICES
21 Penn Plaza - 360 West 31st Street, 8th Floor
New York, NY 10001
TEL: 212.479.5400 FAX: 212.479.5444

No.	DESCRIPTION:	DATE:
1	50% CONSTRUCTION DOCUMENTS	04-08-15
2	ISSUED FOR FILING	07-28-15

Discrepancies must be reported immediately to the Architect before proceeding. Only figured dimensions are to be used. Contractors must check all dimensions on site. This drawing is protected by copyright.

ALL DIMENSIONS ARE SHOWN IN IMPERIAL.

CONSULTANT:
WSP

PROJECT:
250 SOUTH STREET
NEW YORK, NY

DRAWING TITLE:
3RD FLOOR LOADING DIAGRAM

SEAL & SIGNATURE:

DATE:	04/08/15
PROJECT No:	1302510
DRAWN: CAD	REV:
CHK: CL	
SCALE: As indicated	
DWG No: S-902.00	
DOB PAGE No: of	

DOB EMPLOYEE STAMP:

DOB B-SCAN:

30" x 42" Arch E1 - SHEET SIZE

FILE NAME:
PLOT DATE:

DEPT OF BLDGS121185528 Job Number
ES794178509 Scan Code

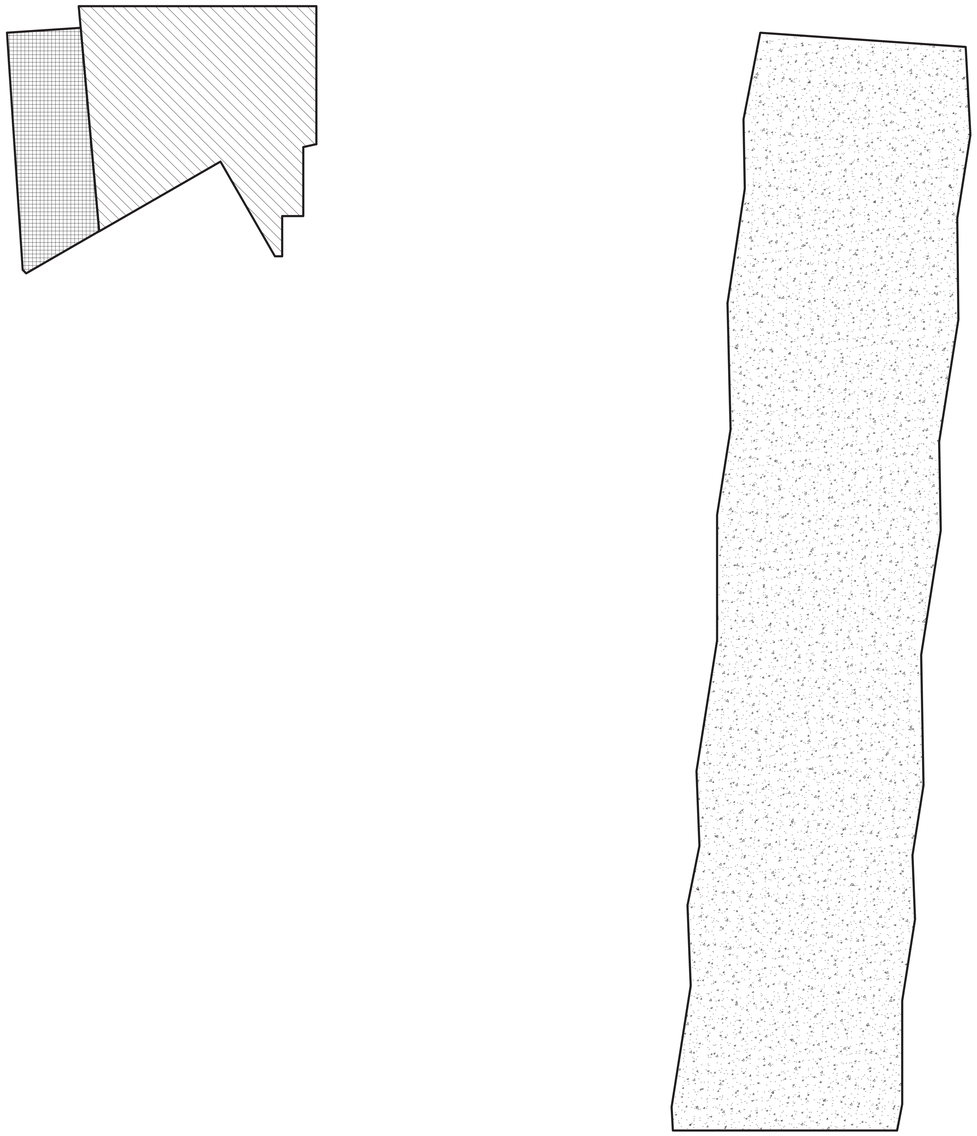

1 4TH FLOOR LOADING DIAGRAM
S-903 SCALE: 1/16" = 1'-0"

4TH FLOOR LOADING SCHEDULE (STEEL FRAMED AREA) (NOTE A)								
AREA	SUPERIMPOSED DEAD LOAD					(NOTE B) LIVE LOAD	DESCRIPTION	REMARKS
	FINISH/FILL	BUILT-UP	MISC.	MEP +CEILING	PARTITION			
	lbs/sq.ft	lbs/sq.ft	lbs/sq.ft	lbs/sq.ft	lbs/sq.ft	lbs/sq.ft		
				40	20	150	MECH ROOM	
		600		40	10	70	NETWORK COMP (NOTE C)	
	10		10	40		70	APARTMENT AT TOWER TRANSFER SLAB (NOTE D)	

NOTES:
A. DEAD LOAD BASED ON SLAB CONSTRUCTION AND FRAMING SELF-WEIGHT AS INDICATED ON THE CORRESPONDING FRAMING
B. LIVE LOAD REDUCTION IS CONSIDERED BASED ON NYC BUILDING CODE.
C. SEE TYPICAL SLAB ON METAL DECK DETAIL WHERE LIVE LOAD + SUPERIMPOSED DEAD LOAD LARGER THAN 400 PSF.
D. REFER TO S-003 THRU S-006 BY SPECIALITY ENGINEERS DATED 2015.01.30 FOR ADD'L LOAD

KEY PLAN:

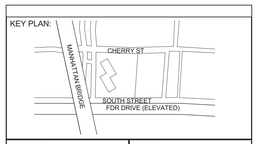

PROJECT NORTH

TRUE NORTH

DEVELOPER:
EXTELL DEVELOPMENT COMPANY
805 Third Ave, 7th Floor
New York, NY 10022
TEL: 212-712-6000 FAX: 212-712-6100

ARCHITECT OF RECORD:
AAI ARCHITECTS, P.C.
14 Wall Street, 2nd Floor
New York, NY 10005
TEL: 212-964-4040 FAX: 212-964-4090

INTERIOR DESIGNER:
MEYER DAVIS
180 Varick St, suite 404
New York, NY 10014
TEL: 212-627-5574

LANDSCAPE DESIGNER:
WEST 8 URBAN DESIGN & LANDSCAPE ARCHITECTURE P.C.
333 Hudson Street, Suite 905
New York, NY 10013
TEL: 212-285-0088 FAX: 212-285-0228

STRUCTURAL ENGINEERS:
WSP
228 East 45th Street
New York, NY 10017
TEL: 212-687-9888 FAX: 646-487-5501

MEP ENGINEERS:
ICOR ASSOCIATES, LLC
485 C Route 1 South, Suite 200
Iseline, NJ 08830
TEL: 908-272-3300 FAX: 908-272-4440

GEOTECHNICAL ENGINEERS:
LANGAN ENGINEERING & ENVIRONMENTAL SERVICES
21 Penn Plaza - 360 West 31st Street, 8th Floor
New York, NY 10001
TEL: 212.479.5400 FAX: 212.479.5444

No.	DESCRIPTION:	DATE:
1	50% CONSTRUCTION DOCUMENTS	04-08-15
2	ISSUED FOR FILING	07-28-15

Discrepancies must be reported immediately to the Architect before proceeding. Only figured dimensions are to be used. Contractors must check all dimensions on site. This drawing is protected by copyright.

ALL DIMENSIONS ARE SHOWN IN IMPERIAL.

CONSULTANT:
WSP

PROJECT:
250 SOUTH STREET
NEW YORK, NY

DRAWING TITLE:
4TH FLOOR LOADING DIAGRAM

SEAL & SIGNATURE:

DATE:	04/08/15
PROJECT No:	1302510
DRAWN: CAD	REV:
CHK: CL	
SCALE: As indicated	
DWG No:	S-903.00
DOB PAGE No:	of

DOB EMPLOYEE STAMP:

DOB B-SCAN:

30" x 42" Arch E1 - SHEET SIZE
FILE NAME:
PLOT DATE:

DEPT OF BLDGS 121185528 Job Number
ES415007334 Scan Code

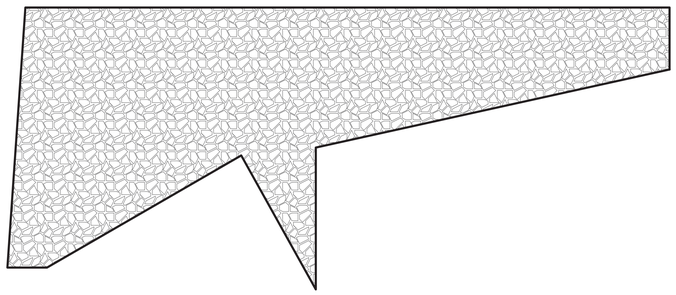

5TH FLOOR LOADING SCHEDULE (STEEL FRAMED AREA) (NOTE A)								
AREA	SUPERIMPOSED DEAD LOAD					(NOTE B) LIVE LOAD	DESCRIPTION	REMARKS
	FINISH/FILL	BUILT-UP	MISC.	MEP +CEILING	PARTITION			
	lbs/sq.ft	lbs/sq.ft	lbs/sq.ft	lbs/sq.ft	lbs/sq.ft	lbs/sq.ft		
		480				150	TEA GARDEN/LANDSCAPE (NOTE C)	

NOTES:
A. DEAD LOAD BASED ON SLAB CONSTRUCTION AND FRAMING SELF-WEIGHT AS INDICATED ON THE CORRES[PONDING FRAMING
B. LIVE LOAD REDUCTION IS CONSIDERED BASED ON NYC BUILDING CODE.
C. SEE TYPICAL SLAB ON METAL DECK DETAIL WHERE LIVE LOAD + SUPERIMPOSED DEAD LOAD LARGER THAN 400 PSF.

1 S-904 5TH FLOOR LOADING DIAGRAM
SCALE: 1/16" = 1'-0"

KEY PLAN:

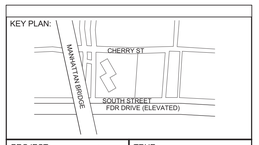

PROJECT NORTH

TRUE NORTH

DEVELOPER:
EXTELL DEVELOPMENT COMPANY
805 Third Ave, 7th Floor
New York, NY 10022
TEL: 212-712-6000 FAX: 212-712-6100

ARCHITECT OF RECORD:
AAI ARCHITECTS, P.C.
14 Wall Street, 2nd Floor
New York, NY 10005
TEL: 212-964-4040 FAX: 212-964-4090

INTERIOR DESIGNER:
MEYER DAVIS
180 Varick St, suite 404
New York, NY 10014
TEL: 212-627-5574

LANDSCAPE DESIGNER:
WEST 8 URBAN DESIGN & LANDSCAPE ARCHITECTURE P.C.
333 Hudson Street, Suite 905
New York, NY 10013
TEL: 212-285-0088 FAX: 212-285-0228

STRUCTURAL ENGINEERS:
WSP
228 East 45th Street
New York, NY 10017
TEL: 212-687-9888 FAX: 646-487-5501

MEP ENGINEERS:
ICOR ASSOCIATES, LLC
485 C Route 1 South, Suite 200
Iseline, NJ 08830
TEL: 908-272-3300 FAX: 908-272-4440

GEOTECHNICAL ENGINEERS:
LANGAN ENGINEERING & ENVIRONMENTAL SERVICES
21 Penn Plaza - 360 West 31st Street, 8th Floor
New York, NY 10001
TEL: 212.479.5400 FAX: 212.479.5444

No.	DESCRIPTION:	DATE:
1	50% CONSTRUCTION DOCUMENTS	04-08-15
2	ISSUED FOR FILING	07-28-15

Discrepancies must be reported immediately to the Architect before proceeding. Only figured dimensions are to be used. Contractors must check all dimensions on site. This drawing is protected by copyright.

ALL DIMENSIONS ARE SHOWN IN IMPERIAL.

CONSULTANT:
WSP

PROJECT:
250 SOUTH STREET
NEW YORK, NY

DRAWING TITLE:
5TH FLOOR LOADING DIAGRAM

SEAL & SIGNATURE:

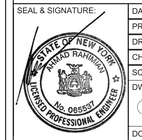

DATE:	04/08/15
PROJECT No:	1302510
DRAWN: CAD	REV:
CHK: CL	
SCALE: As indicated	
DWG No:	S-904.00
DOB PAGE No:	of

DOB EMPLOYEE STAMP:

DOB B-SCAN:

30" x 42" Arch E1 - SHEET SIZE
FILE NAME:
PLOT DATE:

DEPT OF BLDGS121185528 Job Number
ES645250796 Scan Code

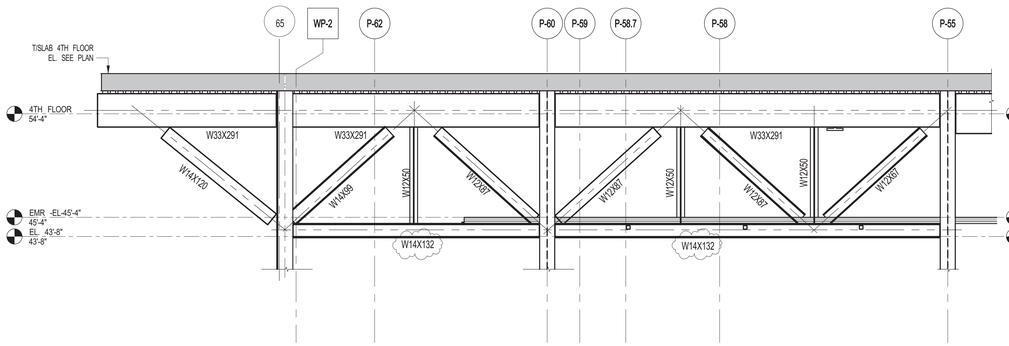

1 TRUSS 4A - GRIDLINE P-T
S-930 SCALE: 3/16" = 1'-0"

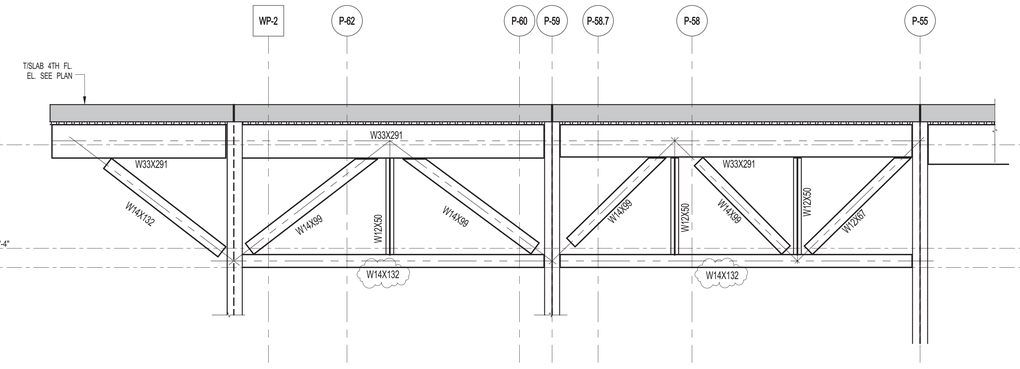

2 TRUSS 4B - GRIDLINE P-M
S-930 SCALE: 3/16" = 1'-0"

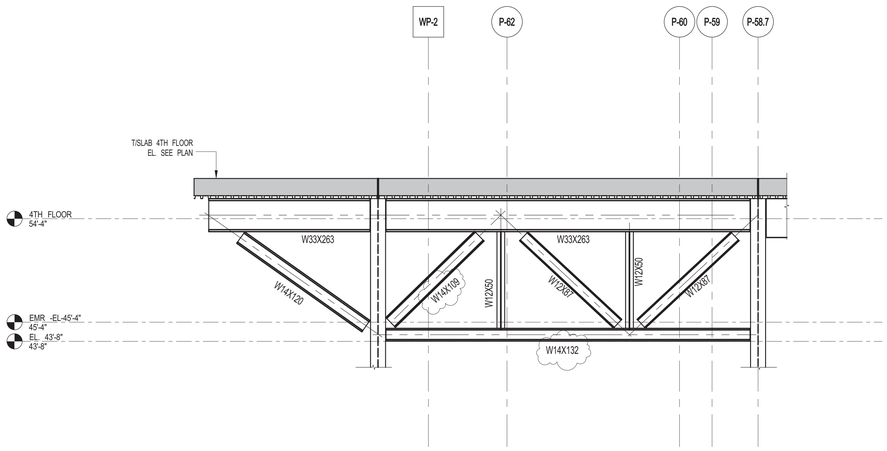

3 TRUSS 4C - AT GRID LINE P-K
S-930 SCALE: 3/16" = 1'-0"

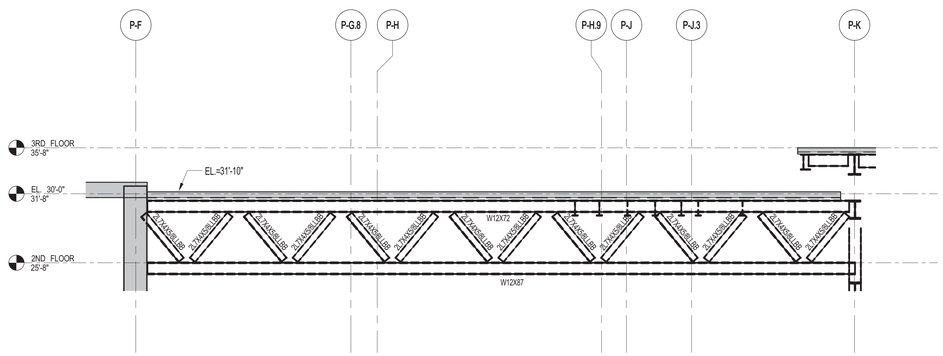

4 TRUSS SJ
S-930 SCALE: 3/16" = 1'-0"

KEY PLAN:

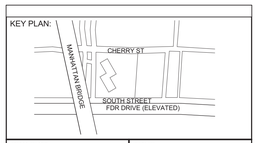

PROJECT NORTH

TRUE NORTH

DEVELOPER:
EXTELL DEVELOPMENT COMPANY
805 Third Ave, 7th Floor
New York, NY 10022
TEL: 212-712-6000 FAX: 212-712-6100

ARCHITECT OF RECORD:
AAI ARCHITECTS, P.C.
14 Wall Street, 2nd Floor
New York, NY 10005
TEL: 212-964-4040 FAX: 212-964-4090

INTERIOR DESIGNER:
MEYER DAVIS
180 Varick St, suite 404
New York, NY 10014
TEL: 212-627-5574

LANDSCAPE DESIGNER:
WEST 8 URBAN DESIGN & LANDSCAPE ARCHITECTURE P.C.
333 Hudson Street, Suite 905
New York, NY 10013
TEL: 212-285-0088 FAX: 212-285-0228

STRUCTURAL ENGINEERS:
WSP
228 East 45th Street
New York, NY 10017
TEL: 212-687-9888 FAX: 646-487-5501

MEP ENGINEERS:
ICOR ASSOCIATES, LLC
485 C Route 1 South, Suite 200
Iseline, NJ 08830
TEL: 908-272-3300 FAX: 908-272-4440

GEOTECHNICAL ENGINEERS:
LANGAN ENGINEERING & ENVIRONMENTAL SERVICES
21 Penn Plaza - 360 West 31st Street, 8th Floor
New York, NY 10001
TEL: 212.479.5400 FAX: 212.479.5444

No.	DESCRIPTION:	DATE:
1	STEEL BID PACKAGE	02-24-15
2	ADDENDUM #10	07-20-15
3	ISSUED FOR FILING	07-28-15

Discrepancies must be reported immediately to the Architect before proceeding. Only figured dimensions are to be used. Contractors must check all dimensions on site. This drawing is protected by copyright.

ALL DIMENSIONS ARE SHOWN IN IMPERIAL.

CONSULTANT:
WSP

PROJECT:
250 SOUTH STREET
NEW YORK, NY

DRAWING TITLE:
TRUSS ELEVATIONS 1

SEAL & SIGNATURE:

DATE:	02/20/15
PROJECT No:	1302510
DRAWN: CAD	REV:
CHK: CL	
SCALE: 3/16" = 1'-0"	
DWG No:	S-930.01
DOB PAGE No:	of

DOB EMPLOYEE STAMP:

DOB B-SCAN:

30" x 42" Arch E1 - SHEET SIZE

FILE NAME:
PLOT DATE:

DEPT OF BLDGS121105639 Job Number
E390518157Z Scan Code
30" x 42" Arch E1 - SHEET SIZE

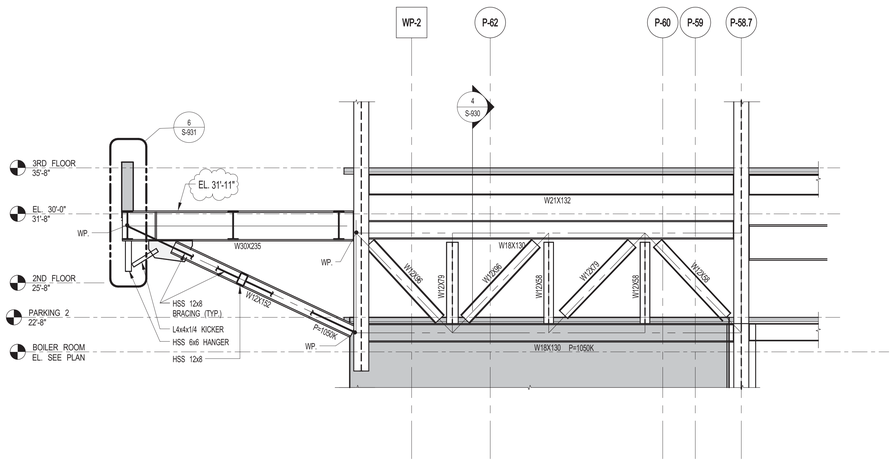

1 S-931 TRUSS 3D - SOUTH CANTILEVER FRAMING AT GRID LINE P-K
SCALE: 3/16" = 1'-0"

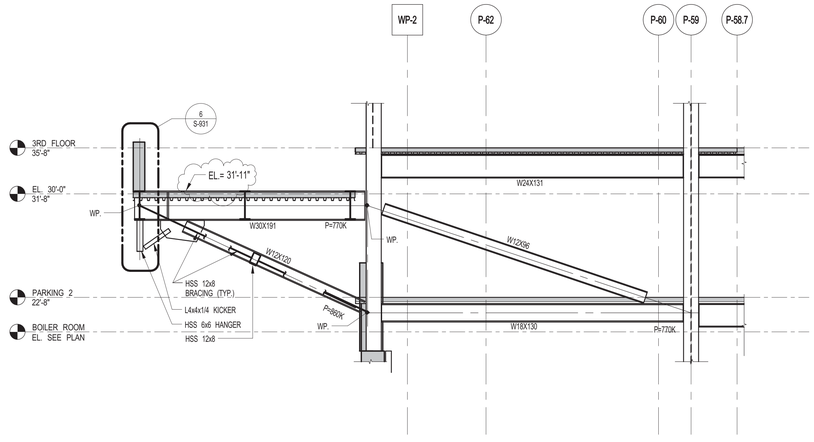

2 S-931 TRUSS 3C - SOUTH CANTILEVER FRAMING AT GRIDLINE P-M
SCALE: 3/16" = 1'-0"

3 S-931 TRUSS 3B - SOUTH CANTILEVER FRAMING AT GRIDLINE P-T
SCALE: 3/16" = 1'-0"

4 S-931 TRUSS 3A - SOUTH CANTILEVER FRAMING AT GRIDLINE P-W
SCALE: 3/16" = 1'-0"

6 S-931 SECTION
SCALE: 3/4" = 1'-0"

5 S-931 3D VIEW
SCALE:

KEY PLAN:

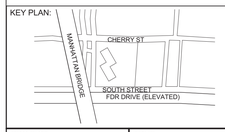

PROJECT NORTH

TRUE NORTH

DEVELOPER:
EXTELL DEVELOPMENT COMPANY
805 Third Ave, 7th Floor
New York, NY 10022
TEL: 212-712-6000 FAX: 212-712-6100

ARCHITECT OF RECORD:
AAI ARCHITECTS, P.C.
14 Wall Street, 2nd Floor
New York, NY 10005
TEL: 212-964-4040 FAX: 212-964-4090

INTERIOR DESIGNER:
MEYER DAVIS
180 Varick St, suite 404
New York, NY 10014
TEL: 212-627-5574

LANDSCAPE DESIGNER:
WEST 8 URBAN DESIGN & LANDSCAPE ARCHITECTURE P.C.
333 Hudson Street, Suite 905
New York, NY 10013
TEL: 212-285-0088 FAX: 212-285-0228

STRUCTURAL ENGINEERS:
WSP
228 East 45th Street
New York, NY 10017
TEL: 212-687-9888 FAX: 646-487-5501

MEP ENGINEERS:
ICOR ASSOCIATES, LLC
485 C Route 1 South, Suite 200
Iseline, NJ 08830
TEL: 908-272-3300 FAX: 908-272-4440

GEOTECHNICAL ENGINEERS:
LANGAN ENGINEERING & ENVIRONMENTAL SERVICES
21 Penn Plaza - 360 West 31st Street, 8th Floor
New York, NY 10001
TEL: 212.479.5400 FAX: 212.479.5444

No.	DESCRIPTION:	DATE:
1	STEEL BID PACKAGE	02-24-15
2	ISSUED FOR FILING	07-28-15

Discrepancies must be reported immediately to the Architect before proceeding. Only figured dimensions are to be used. Contractors must check all dimensions on site. This drawing is protected by copyright.

ALL DIMENSIONS ARE SHOWN IN IMPERIAL.

CONSULTANT:
WSP

PROJECT:
250 SOUTH STREET
NEW YORK, NY

DRAWING TITLE:
TRUSS ELEVATIONS 2

SEAL & SIGNATURE:
STATE OF NEW YORK · AHMAD RAFIQUN · No. 065027 · LICENSED PROFESSIONAL ENGINEER

DATE:	02/19/15
PROJECT No:	1302510
DRAWN: CAD	REV:
CHK: CL	
SCALE: As indicated	
DWG No:	**S-931.01**
DOB PAGE No:	of

DOB EMPLOYEE STAMP:
Damian Titus
Buildings
APPROVED
Under Directive 2 of 1975
AMENDED APPLICATION
Date: 10/08/2015
NYC Development Hub

DOB B-SCAN:

FILE NAME:
PLOT DATE:

30" x 42" Arch E1 - SHEET SIZE

DEPT OF BLDGS 121185569 Job Number
E540591625 Scan Code

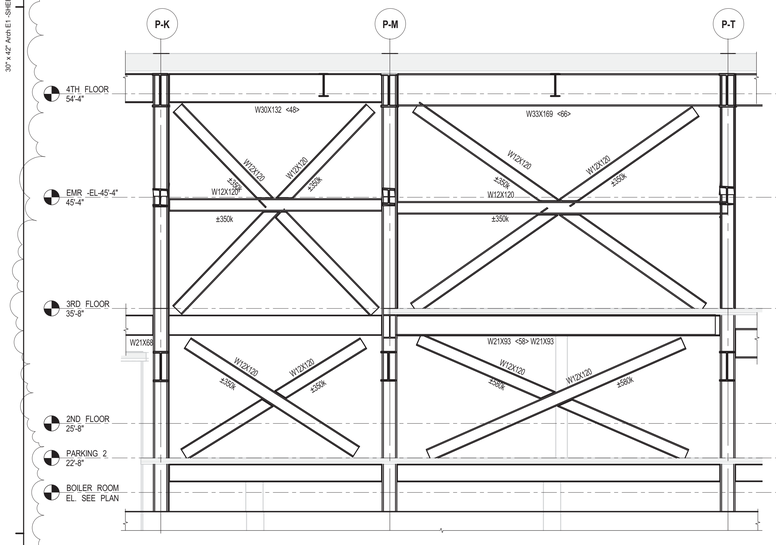

1 S-932 BRACE BR-1 ELEVATION
SCALE: 3/16" = 1'-0"

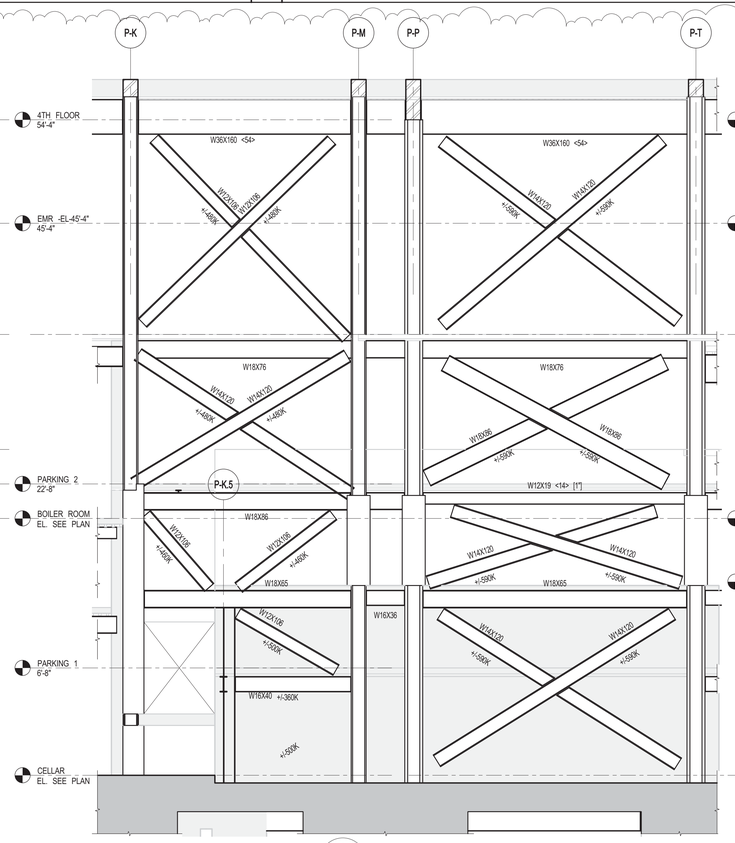

2 S-932 BRACE BR-2 ELEVATION
SCALE: 3/16" = 1'-0"

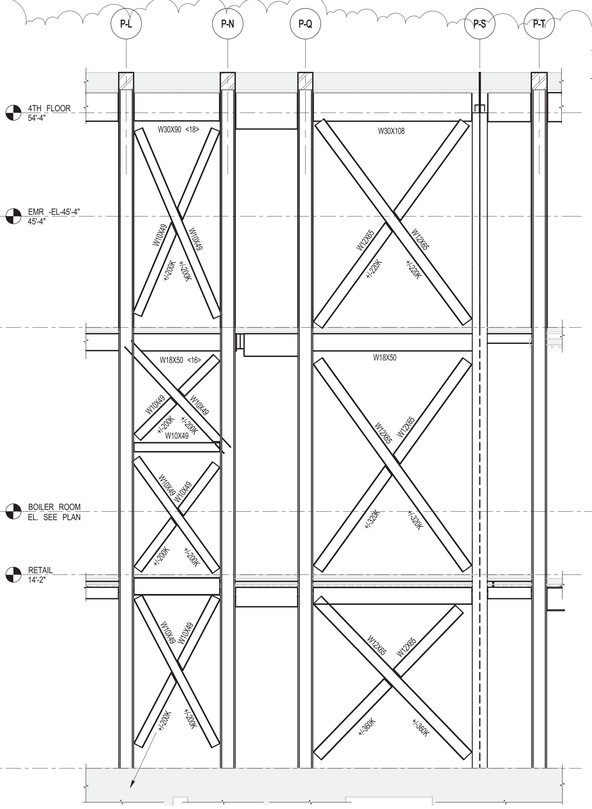

3 S-932 BRACE BR-3 ELEVATION
SCALE: 3/16" = 1'-0"

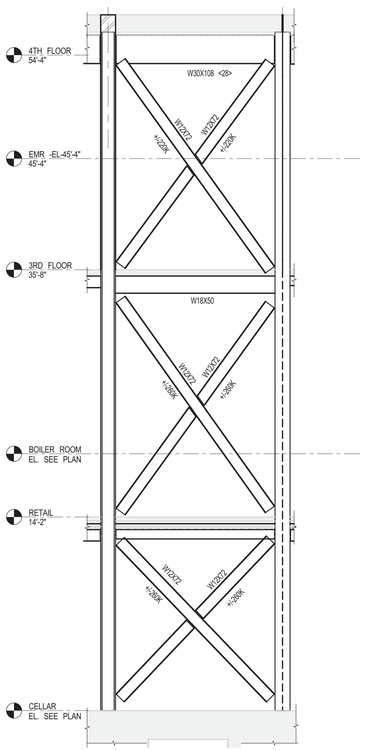

4 S-932 BRACE BR-4 ELEVATION
SCALE: 3/16" = 1'-0"

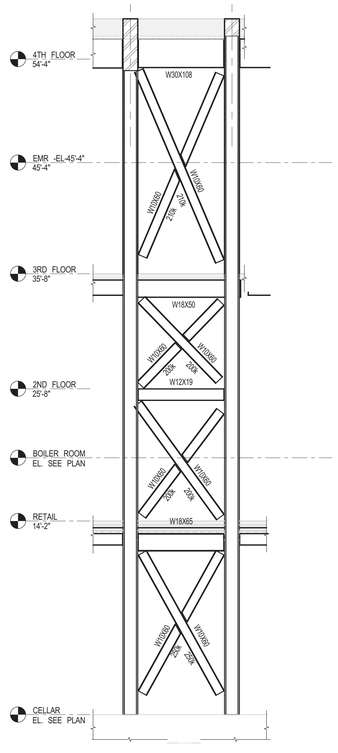

5 S-932 BRACE BR-5 ELEVATION
SCALE: 3/16" = 1'-0"

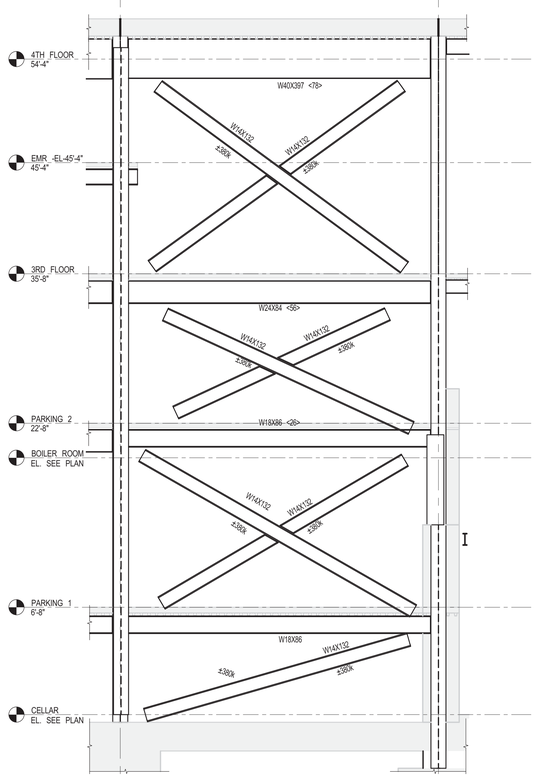

6 S-932 BRACE BR-6 ELEVATION
SCALE: 3/16" = 1'-0"

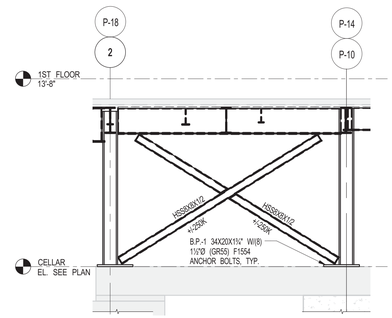

7 S-932 (2) TEMP. BRACE ELEVATION ALONG GRID P-H & GRID K
SCALE: 3/16" = 1'-0"

KEY PLAN:

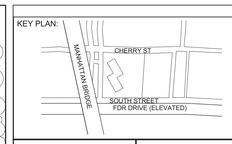

PROJECT NORTH

TRUE NORTH

DEVELOPER:
EXTELL DEVELOPMENT COMPANY
805 Third Ave, 7th Floor
New York, NY 10022
TEL: 212-712-6000 FAX: 212-712-6100

ARCHITECT OF RECORD:
AAI ARCHITECTS, P.C.
14 Wall Street, 2nd Floor
New York, NY 10005
TEL: 212-964-4040 FAX: 212-964-4090

INTERIOR DESIGNER:
MEYER DAVIS
180 Varick St, suite 404
New York, NY 10014
TEL: 212-627-5574

LANDSCAPE DESIGNER:
WEST 8 URBAN DESIGN & LANDSCAPE ARCHITECTURE P.C.
333 Hudson Street, Suite 905
New York, NY 10013
TEL: 212-285-0088 FAX: 212-285-0228

STRUCTURAL ENGINEERS:
WSP
228 East 45th Street
New York, NY 10017
TEL: 212-687-9888 FAX: 646-487-5501

MEP ENGINEERS:
ICOR ASSOCIATES, LLC
485 C Route 1 South, Suite 200
Iseline, NJ 08830
TEL: 908-272-3300 FAX: 908-272-4440

GEOTECHNICAL ENGINEERS:
LANGAN ENGINEERING & ENVIRONMENTAL SERVICES
21 Penn Plaza - 360 West 31st Street, 8th Floor
New York, NY 10001
TEL: 212.479.5400 FAX: 212.479.5444

No.	DESCRIPTION:	DATE:
1	STEEL BID PACKAGE	02-24-15
2	50% CONSTRUCTION DOCUMENTS	04-08-15
3	ISSUED FOR FILING	07-28-15

Discrepancies must be reported immediately to the Architect before proceeding. Only figured dimensions are to be used. Contractors must check all dimensions on site. This drawing is protected by copyright.

ALL DIMENSIONS ARE SHOWN IN IMPERIAL.

CONSULTANT:
WSP

PROJECT:
250 SOUTH STREET
NEW YORK, NY

DRAWING TITLE:
BRACING ELEVATIONS 1

SEAL & SIGNATURE:
STATE OF NEW YORK · AHMAD RAHIMIAN · No. 085527 · LICENSED PROFESSIONAL ENGINEER

DATE:	02/24/15
PROJECT No:	1302510
DRAWN: CAD	REV:
CHK: CL	
SCALE: 3/16" = 1'-0"	
DWG No:	**S-932.01**
DOB PAGE No:	of

DOB EMPLOYEE STAMP:
Damian Titus
NYC Buildings
APPROVED
Under Directive 2 of 1975
AMENDED APPLICATION
Date: 10/08/2015
NYC Development Hub

DOB B-SCAN:

FILE NAME:
PLOT DATE:

DEPT OF BLDGS121105028 Job Number
E1508252606 Scan Code
30" x 42" Arch E1 - SHEET SIZE

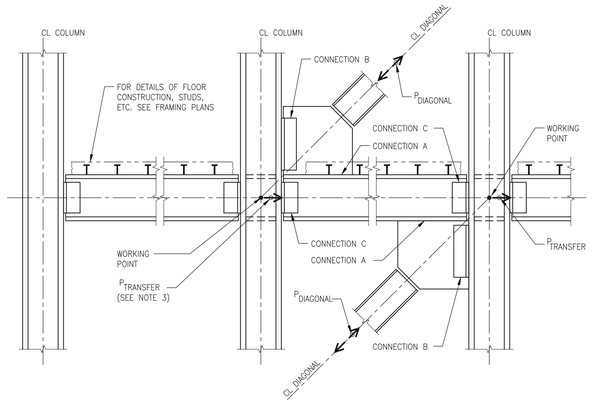

BRACING ELEVATION ILLUSTRATING

WORKING POINTS AND ADDITIONAL FORCES: $P_{TRANSFER}$ & $P_{DIAGONAL}$

NOTE:

SIMPLIFIED ELEVATION, SEE REMAINING DETAILS ON THIS DRAWING FOR ADDITIONAL INFORMATION.

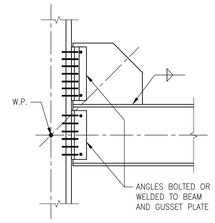

DOUBLE ANGLE CONNECTION TO COLUMN FLANGE

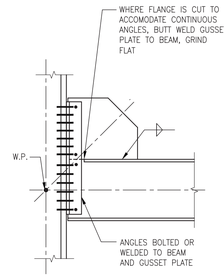

SINGLE LENGTH DOUBLE ANGLE CONNECTION TO COLUMN FLANGE

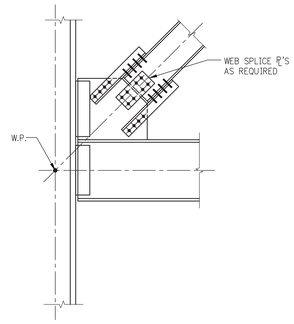

DIAGONAL CONNECTION TO GUSSET PLATE

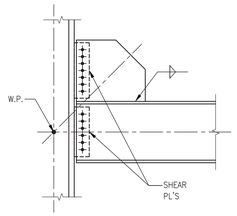

SHEAR PLATE CONNECTION TO COLUMN FLANGE

BEAM/GUSSET PLATE DETAILS AT COLUMN

NOTE:

BRACES NOT SHOWN FOR CLARITY

NOTES:

1. THE UNIFORM FORCE METHOD, AS OUTLINED IN THE MANUAL OF STEEL CONSTRUCTION (LRFD) OF THE AISC, SHALL BE USED IN THE DESIGN OF WIND TRUSS CONNECTIONS:
   A. CONNECTION OF GUSSET PLATE TO BEAM
   B. CONNECTION OF GUSSET PLATE TO COLUMN
   C. CONNECTION OF BEAM TO COLUMN.
2. SEE BRACED FRAME ELEVATIONS IN THE CONTRACT DRAWINGS FOR MEMBER SIZES.
   SEE COLUMN SCHEDULES AND FRAMING PLANS FOR MEMBER SIZES AND/OR ORIENTATIONS NOT SHOWN IN ELEVATIONS.
3. REQUIRED TENSION STRENGTH OF BRACING CONNECTIONS (INCLUDING BEAM TO COLUMN CONNECTIONS IF PART OF THE BRACING SYSTEM) SHALL BE BASED UPON THE FOLLOWING:
   $P_{DIAGONAL} = Ry \times Fy \times Ag$ (ULTIMATE/LRFD LOAD)
   Fy = SPECIFIED BRACE MIN. YIELD STRESS (KSI).
   Ry = AS NOTED IN TABLE I-6-1 OF AISC 341-02.
   Ag = GROSS BRACE AREA (IN²).
4. REQUIRED COMPRESSION STRENGTH OF BRACING CONNECTIONS (INCLUDING BEAM TO COLUMN CONNECTIONS IF PART OF THE BRACING SYSTEM) SHALL BE BASED UPON THE FOLLOWING:
   $P_{DIAGONAL} = F_{cr} \times Ag$
   Fcr = CRITICAL STRESS PER AISC LRFD SPEC.
5. IN ADDITION TO VERTICAL AND HORIZONTAL COMPONENTS DERIVED FROM AXIAL FORCES IN DIAGONALS (P_{DIA}), THE ADDITIONAL FORCE (P_T) IS TO BE INCLUDED IN DESIGN OF CONNECTION, WHERE:
   $P_{TRANSFER}$, THE HORIZONTAL FORCE TRANSFERRING THROUGH A COLUMN FROM ONE SIDE TO THE OTHER AS INDICATED ON FRAMING PLANS. (LRFD LOAD) (TENSION OR COMPRESSION)
6. CONNECT BEAM FLANGES TO COLUMN AS REQUIRED TO TRANSFER FORCES DESCRIBED ABOVE.
7. IN DESIGN OF ALL CONNECTIONS FOR AXIAL FORCES, WHEN THE CONSTROLLING DESIGN AXIAL FORCE IS COMPRESSION, THE CONNECTION SHALL BE DESIGNED TO ALSO PROVIDE A TENSILE CAPACITY OF AT LEAST 50 PER CENT OF THE COMPRESSIVE LOAD.
8. COLUMNS SHALL BE INVESTIGATED FOR $P_{TRANSFER}$ FORCES TO DETERMINE WHETHER STIFFENER PLATES ARE REQUIRED.
9. SLIP-CRITICAL BOLTS USED IN ALL BRACED FRAME CONNECTIONS SHALL BE BASED UPON BOLT VALUES GIVEN IN TABLE 7-4 "SLIP-CRITICAL CONNECTIONS" WHERE "SLIP IS A STRENGTH LIMIT-STATE," CLASS A FAYING SURFACE (13TH EDITION OF AISC MANUAL) (MINIMUM BOLT DIAMETER = 7/8")
10. IF THE FABRICATOR PROPOSES TO USE CLASS B FAYING SURFACE AND A GREATER BOLT CAPACITY THAN TABLE 7-4 VALUES, HE MUST SUBMIT HIS PROPOSED DESIGN AND FABRICATION PROCEDURES TO THE ENGINEER FOR PRIOR APPROVAL.
11. GUSSET PLATE DESIGN SHALL INCLUDE CONSIDERATION OF BUCKLING.
12. THE DETAILS SHOWN ON THIS DWG. ARE TYPICAL DETAILS FOR VARIOUS BRACING CONNECTION CONDITIONS. THE SIZE AND NUMBER OF BOLTS, WELDS, GUSSETS AND PLATES TO BE ENGINEERED AND DETAILED ON SHOP DWG.. BASED ON FORCES AND DESIGN CRITERIA PROVIDED IN S-300 SERIES.

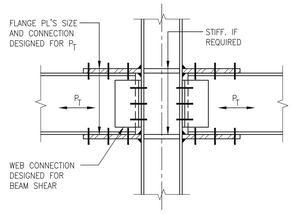

$P_{TRANSFER}$ CONNECTION

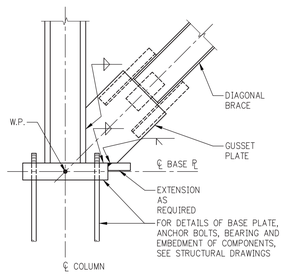

BASE CONNECTION TO COLUMN FLANGE

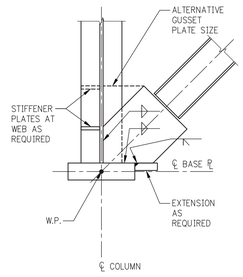

BASE CONNECTION TO COLUMN WEB

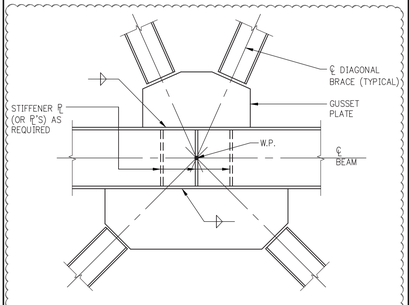

CONNECTION AT 'K' OR 'X' BRACING

NOTE:

GUSSET PLATE CAN OCCUR AT TOP, BOTTOM, OR BOTH FLANGES OF BEAM, DEPENDING UPON BRACING LAYOUT. SEE BRACING ELEVATIONS

KEY PLAN:

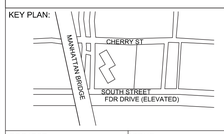

PROJECT NORTH

TRUE NORTH

DEVELOPER:
EXTELL DEVELOPMENT COMPANY
805 Third Ave, 7th Floor
New York, NY 10022
TEL: 212-712-6000 FAX: 212-712-6100

ARCHITECT OF RECORD:
AAI ARCHITECTS, P.C.
14 Wall Street, 2nd Floor
New York, NY 10005
TEL: 212-964-4040 FAX: 212-964-4090

INTERIOR DESIGNER:
MEYER DAVIS
180 Varick St, suite 404
New York, NY 10014
TEL: 212-627-5574

LANDSCAPE DESIGNER:
WEST 8 URBAN DESIGN & LANDSCAPE ARCHITECTURE P.C.
333 Hudson Street, Suite 905
New York, NY 10013
TEL: 212-285-0088 FAX: 212-285-0228

STRUCTURAL ENGINEERS:
WSP
228 East 45th Street
New York, NY 10017
TEL: 212-687-9888 FAX: 646-487-5501

MEP ENGINEERS:
ICOR ASSOCIATES, LLC
485 C Route 1 South, Suite 200
Iseline, NJ 08830
TEL: 908-272-3300 FAX: 908-272-4440

GEOTECHNICAL ENGINEERS:
LANGAN ENGINEERING & ENVIRONMENTAL SERVICES
21 Penn Plaza - 360 West 31st Street, 8th Floor
New York, NY 10001
TEL: 212.479.5400 FAX: 212.479.5444

No.	DESCRIPTION:	DATE:
1	STEEL BID PACKAGE	02-24-15
2	ADDENDUM #3	03-27-15
3	ISSUED FOR FILING	07-28-15

Discrepancies must be reported immediately to the Architect before proceeding. Only figured dimensions are to be used. Contractors must check all dimensions on site. This drawing is protected by copyright.

ALL DIMENSIONS ARE SHOWN IN IMPERIAL.

CONSULTANT:
WSP

PROJECT:
250 SOUTH STREET
NEW YORK, NY

DRAWING TITLE:
BRACING DETAILS

SEAL & SIGNATURE:
STATE OF NEW YORK · ANMAD RAHIMIAN · No. 085551 · LICENSED PROFESSIONAL ENGINEER

DATE:	07/25/14
PROJECT No:	1302510
DRAWN: CADD	REV:
CHK: CL	
SCALE: N.T.S.	
DWG No:	S-938.01
DOB PAGE No:	of

DOB EMPLOYEE STAMP:
Damian Titus
BuildTech
APPROVED
Under Directive 2 of 1975
AMENDED APPLICATION
Date: 10/08/2015
NYC Development Hub

DOB B-SCAN:

FILE NAME:
PLOT DATE:

DEPT OF BLDGS121185539 Job Number
E360580979 4 Scan Code

30" x 42" Arch E1 - SHEET SIZE

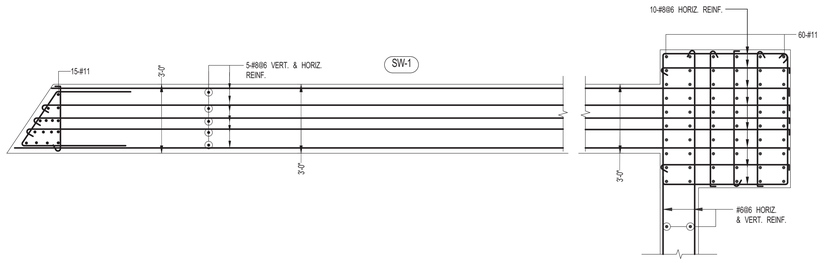

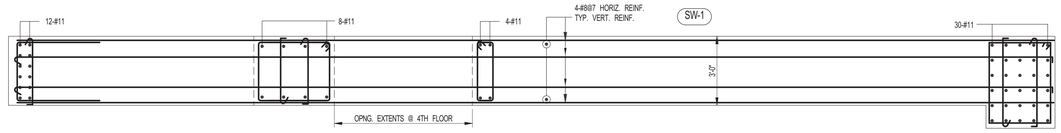

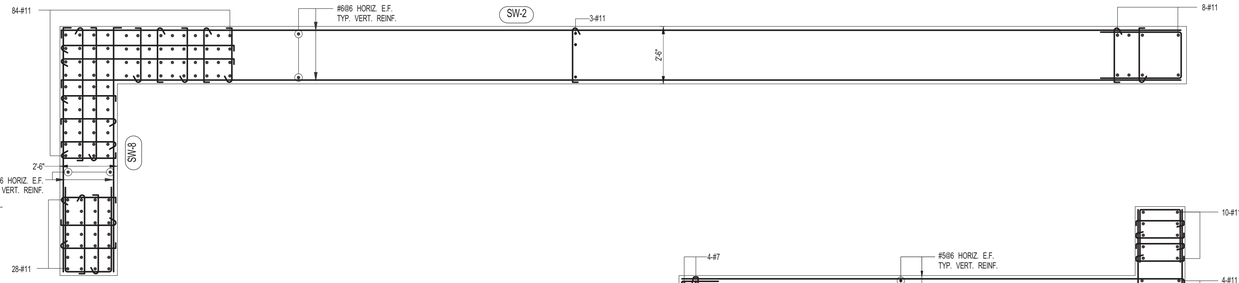

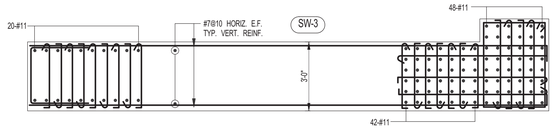

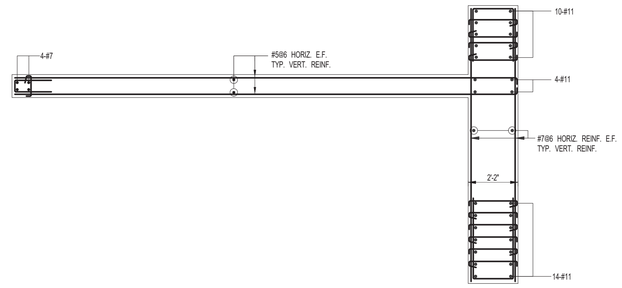

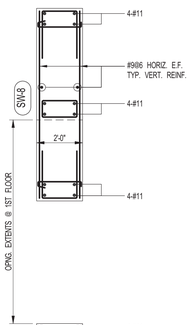

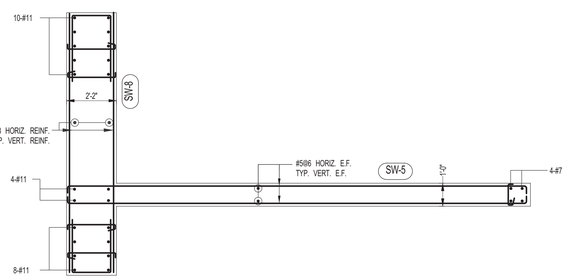

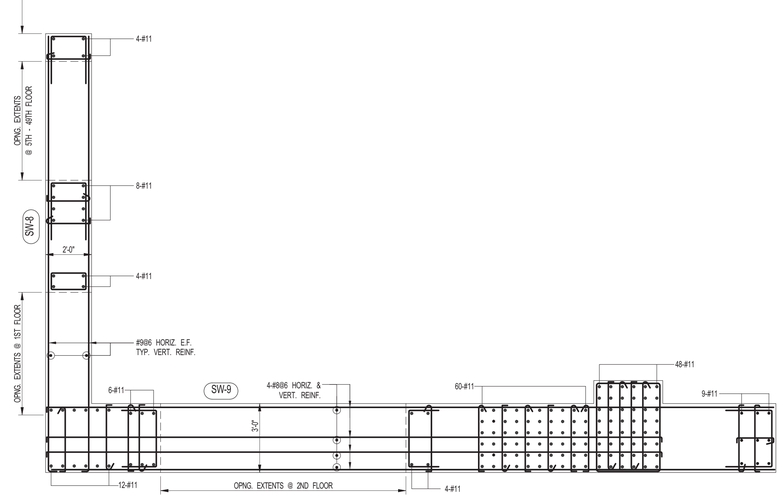

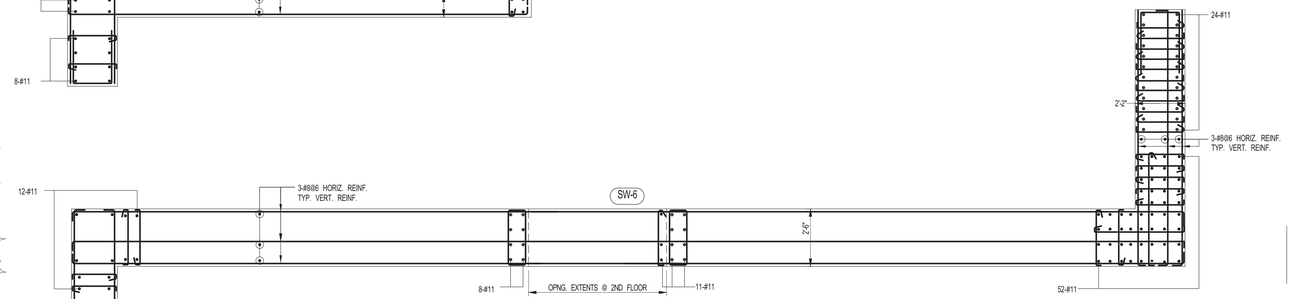

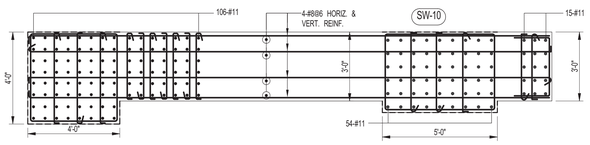

1 S-940 PART PLAN FOUNDATION TO U/S 1ST FLOOR SHEARWALL DETAILS

SCALE: 3/8" = 1'-0"

NOTES:

1. SEE SHEARWALL ELEVATION FOR ADDITIONAL REINFORCEMENT NOT SHOWN ON PLAN
2. ALL REINFORCEMENT SHOWN ON PLAN SHALL BE GARDE 60 U.O.N
3. ALL #11 VERTICAL REINFORCEMENT SHALL BE GRADE 75
4. SEE DRAWING S-849 FOR TYPICAL SHEARWALL DETAILS AND TYPICAL WALL REINFORCEMENT SCHEDULE

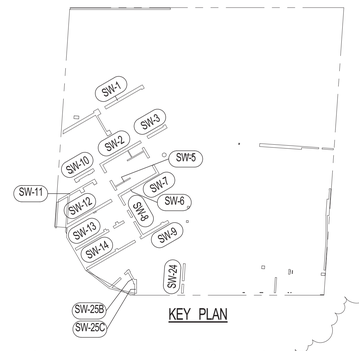

KEY PLAN

FILE NAME:
PLOT DATE:

KEY PLAN:

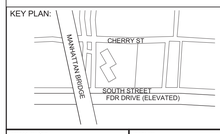

PROJECT NORTH

TRUE NORTH

DEVELOPER:
EXTELL DEVELOPMENT COMPANY
805 Third Ave, 7th Floor
New York, NY 10022
TEL: 212-712-6000 FAX: 212-712-6100

ARCHITECT OF RECORD:
AAI ARCHITECTS, P.C.
14 Wall Street, 2nd Floor
New York, NY 10005
TEL: 212-964-4040 FAX: 212-964-4090

INTERIOR DESIGNER:
MEYER DAVIS
180 Varick St, suite 404
New York, NY 10014
TEL: 212-627-5574

LANDSCAPE DESIGNER:
WEST 8 URBAN DESIGN & LANDSCAPE ARCHITECTURE P.C.
333 Hudson Street, Suite 905
New York, NY 10013
TEL: 212-285-0088 FAX: 212-285-0228

STRUCTURAL ENGINEERS:
WSP
228 East 45th Street
New York, NY 10017
TEL: 212-687-9888 FAX: 646-487-5501

MEP ENGINEERS:
ICOR ASSOCIATES, LLC
485 C Route 1 South, Suite 200
Iseline, NJ 08830
TEL: 908-272-3300 FAX: 908-272-4440

GEOTECHNICAL ENGINEERS:
LANGAN ENGINEERING & ENVIRONMENTAL SERVICES
21 Penn Plaza - 360 West 31st Street, 8th Floor
New York, NY 10001
TEL: 212.479.5400 FAX: 212.479.5444

No.	DESCRIPTION:	DATE:
1	ISSUED FOR FOUNDATION BID	07-25-14
2	50% DD	08-01-14
3	DESIGN DEVELOPMENT	10-07-14
4	ISSUED FOR FOUNDATION BID	01-09-15
5	ISSUED FOR FILING	02-13-15
6	CONCRETE BID PACKAGE	03-06-15
7	ISSUED FOR FILING	07-28-15

Discrepancies must be reported immediately to the Architect before proceeding. Only figured dimensions are to be used. Contractors must check all dimensions on site. This drawing is protected by copyright.

ALL DIMENSIONS ARE SHOWN IN IMPERIAL.

CONSULTANT:
WSP

PROJECT:
250 SOUTH STREET
NEW YORK, NY

DRAWING TITLE:
FOUNDATION TO U/S 1ST FLOOR SHEARWALL DETAILS

SEAL & SIGNATURE:

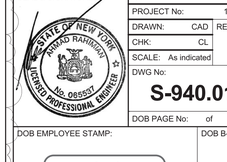

DATE:	07/25/14
PROJECT No:	1302510
DRAWN: CAD	REV:
CHK: CL	
SCALE: As indicated	
DWG No:	**S-940.01**
DOB PAGE No:	of

DOB EMPLOYEE STAMP:

Damian Titus
NYC Buildings
APPROVED
Under Directive 2 of 1975
AMENDED APPLICATION
Date: 10/08/2015
NYC Development Hub

DOB B-SCAN:

DEPT OF BLDGS121305639 Job Number
E3501853M009 Scan Code
30" x 42" Arch E1 - SHEET SIZE

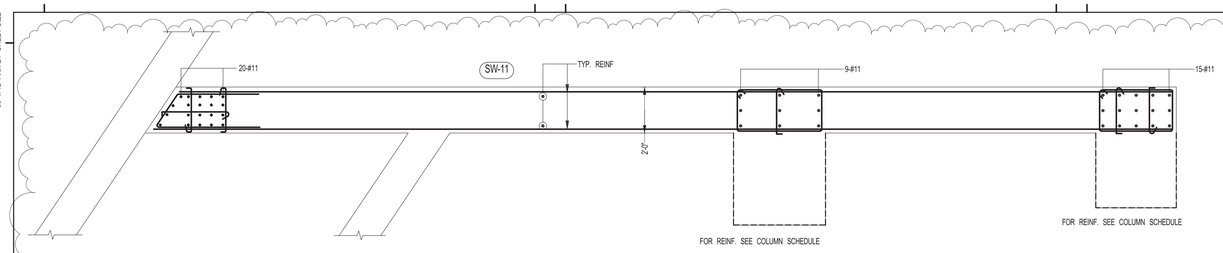

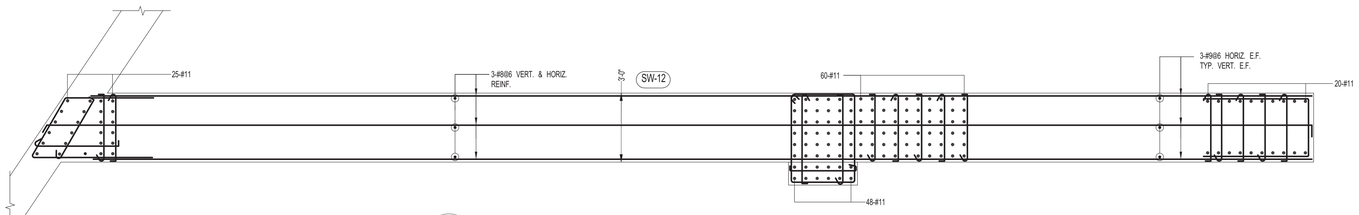

2 S-941 PART PLAN SW12
SCALE: 3/8" = 1'-0"

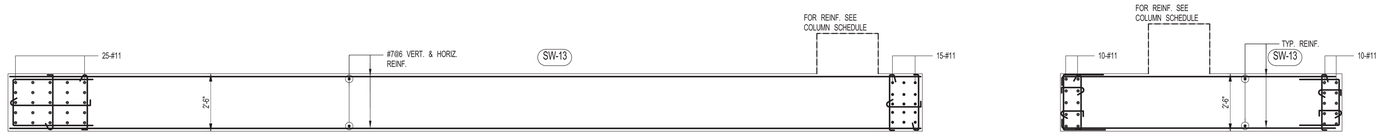

3 S-941 PART PLAN SW13
SCALE: 3/8" = 1'-0"

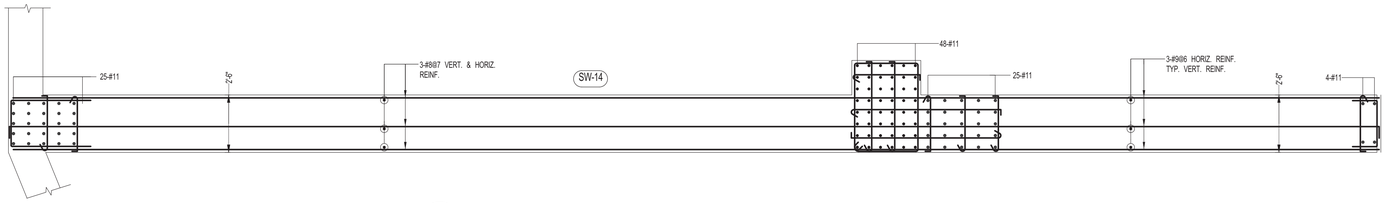

4 S-941 PART PLAN SW14
SCALE: 3/8" = 1'-0"

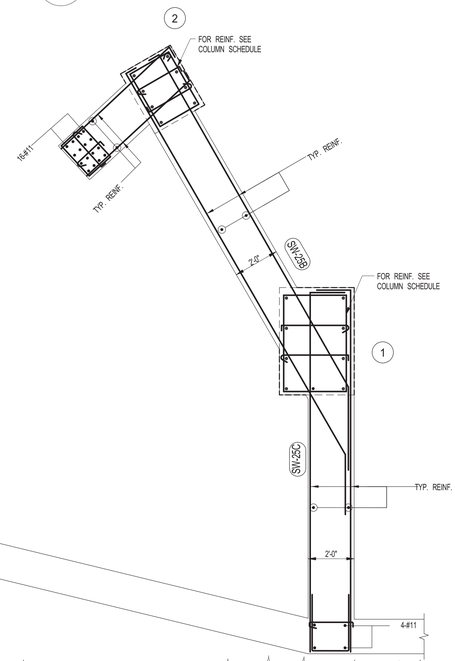

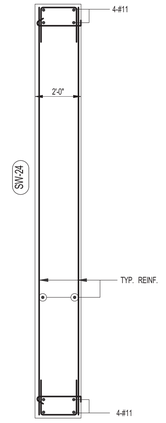

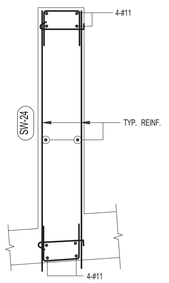

5 S-941 PART PLAN SW24
SCALE: 3/8" = 1'-0"

1 S-941 PART PLAN FOUNDATION TO U/S 1ST FLOOR SHEARWALL DETAILS
SCALE: 3/8" = 1'-0"

NOTES :

1. FOR NOTES SEE DRAWING S-940

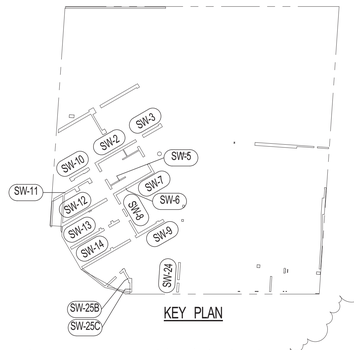

KEY PLAN

KEY PLAN:
CHERRY ST
MANHATTAN BRIDGE
SOUTH STREET
FDR DRIVE (ELEVATED)

PROJECT NORTH
TRUE NORTH

DEVELOPER:
EXTELL DEVELOPMENT COMPANY
805 Third Ave, 7th Floor
New York, NY 10022
TEL: 212-712-6000 FAX: 212-712-6100

ARCHITECT OF RECORD:
AAI ARCHITECTS, P.C.
14 Wall Street, 2nd Floor
New York, NY 10005
TEL: 212-964-4040 FAX: 212-964-4090

INTERIOR DESIGNER:
MEYER DAVIS
180 Varick St, suite 404
New York, NY 10014
TEL: 212-627-5574

LANDSCAPE DESIGNER:
WEST 8 URBAN DESIGN & LANDSCAPE ARCHITECTURE P.C.
333 Hudson Street, Suite 905
New York, NY 10013
TEL: 212-285-0088 FAX: 212-285-0228

STRUCTURAL ENGINEERS:
WSP
228 East 45th Street
New York, NY 10017
TEL: 212-687-9888 FAX: 646-487-5501

MEP ENGINEERS:
ICOR ASSOCIATES, LLC
485 C Route 1 South, Suite 200
Iseline, NJ 08830
TEL: 908-272-3300 FAX: 908-272-4440

GEOTECHNICAL ENGINEERS:
LANGAN ENGINEERING & ENVIRONMENTAL SERVICES
21 Penn Plaza - 360 West 31st Street, 8th Floor
New York, NY 10001
TEL: 212.479.5400 FAX: 212.479.5444

No.	DESCRIPTION:	DATE:
1	50% DD	08-01-14
2	DESIGN DEVELOPMENT	10-07-14
3	ISSUED FOR FOUNDATION BID	01-09-15
4	ISSUED FOR FILING	02-13-15
5	CONCRETE BID PACKAGE	03-06-15
6	50% CONSTRUCTION DOCUMENTS	04-08-15
7	ISSUED FOR FILING	07-28-15

Discrepancies must be reported immediately to the Architect before proceeding. Only figured dimensions are to be used. Contractors must check all dimensions on site. This drawing is protected by copyright.

ALL DIMENSIONS ARE SHOWN IN IMPERIAL.

CONSULTANT: WSP

PROJECT:
250 SOUTH STREET
NEW YORK, NY

DRAWING TITLE:
FOUNDATION TO U/S 1ST FLOOR SHEARWALL DETAILS

SEAL & SIGNATURE: STATE OF NEW YORK · AHMAD RAZDAN · No. 065527 · LICENSED PROFESSIONAL ENGINEER

DATE:	07/25/14
PROJECT No:	1302510
DRAWN: CAD	REV:
CHK: CL	
SCALE: As indicated	

DWG No: **S-941.01**

DOB PAGE No: of

DOB EMPLOYEE STAMP: Damian Titus · BuildTech · APPROVED · Under Directive 2 of 1975 · AMENDED APPLICATION · Date: 10/08/2015 · NYC Development Hub

DOB B-SCAN:

FILE NAME:
PLOT DATE:

MARK	FLOOR	CONCRETE BEAM						STEEL SECTION															REMARKS
		SIZE b x h (IN)	TOP & BOTTOM REINF.	STIRRUPS			SKIN REINF.	TYPE	Fy (ksi)	d (IN)	bf (IN)	tf (IN)	tw (IN)	DEVELOPMENT LENGTH	STUDS		ADD'L HORIZ. U-BARS @ T&B OF BEAM	T/C THREADED RODS	PROVIDE STIFF. PL. AT FACE OF WALL	ADD'L STIFF. PL. FROM FACE OF WALL	STEEL BEAM WEB OPENING		
				SIZE	LEGS	SPACING									ROWS	COLS.					TYPE	WEB DOUBLER	
LB01	ROOF	18 X 84	3-#10	#4	2	8"	13-#5 E.F.	-	-	-	-	-	-	-	-	-	-	-	-	-			-
LB01	71	18 X 59	3-#10	#4	2	12"	7-#4 E.F.	-	-	-	-	-	-	-	-	-	-	-	-	-			-
LB01	70	18 X 32	3-#8	#4	2	10"	-	-	-	-	-	-	-	-	-	-	-	-	-	-			-
LB01	68 - 69	18 X 30	3-#8	#4	2	10"	-	-	-	-	-	-	-	-	-	-	-	-	-	-			-
LB01	66 - 67	18 X 30	3-#9	#4	2	7"	-	-	-	-	-	-	-	-	-	-	-	-	-	-			-
LB01	64 - 65	18 X 30	3-#10	#4	2	7"	-	-	-	-	-	-	-	-	-	-	-	-	-	-			-
LB01	63	18 X 43	4-#10	#5	2	6"	6-#4 E.F.	-	-	-	-	-	-	-	-	-	-	-	-	-			2 Layers
LB01	62	18 X 30	4-#10	#5	2	9"	-	-	-	-	-	-	-	-	-	-	-	-	-	-			2 Layers
LB01	61	18 X 30	4-#10	#5	2	8"	-	-	-	-	-	-	-	-	-	-	-	-	-	-			2 Layers
LB01	60	18 X 30	4-#11	#5	2	4"	-	-	-	-	-	-	-	-	-	-	-	-	-	-			2 Layers
LB01	55 - 59	18 X 27	3-#11	#6	2	5"	-	-	-	-	-	-	-	-	-	-	-	-	-	-	2	YES	-
LB01	54	18 X 40	2-#11	#4	2	12"	-	BUILT UP	65	34	8	3/4	3/4	5'-0"	1	6	3-#6	-	-	-			-
LB01	52 - 53	18 X 27	4-#11	#5	2	5"	-	-	-	-	-	-	-	-	-	-	-	-	-	-			2 Layers
LB01	51	18 X 27	4-#11	#5	2	5"	3-#4 E.F.	-	-	-	-	-	-	-	-	-	-	-	-	-			2 Layers
LB01	50	18 X 51	2-#11	#4	2	12"	6-#4 E.F.	BUILT UP	65	45	8	1	5/8	4'-6"	1	9	3-#6	-	-	-			-
LB01	49	18 X 47	2-#11	#4	2	12"	6-#4 E.F.	BUILT UP	65	41	8	1	3/4	4'-6"	1	11	3-#6	-	-	-	4	YES	-
LB01	45 - 48	18 X 27	6-#11	#6	2	4"	3-#4 E.F.	-	-	-	-	-	-	-	-	-	-	-	-	-			2 Layers
LB01	44	18 X 40	2-#11	#4	2	12"	-	BUILT UP	65	34	8	1	1 1/8	5'-0"	1	11	3-#6	-	-	-	2	YES	-
LB01	38 - 43	18 X 27	2-#11	#4	2	10"	-	BUILT UP	65	21	8	3/4	5/8	4'-6"	1	5	3-#6	-	-	-	1	YES	-
LB01	36 - 37	18 X 27	2-#11	#4	2	10"	-	BUILT UP	65	21	8	3/4	3/4	4'-6"	1	5	3-#6	-	-	-	1	YES	-
LB01	35	24 X 40	4-#11	#4	2	12"	-	BUILT UP	65	34	10	1	1 1/4	5'-6"	1	13	3-#6	-	-	-	2	YES	-
LB01	29 - 34	24 X 27	5-#11	#6	2	4"	5-#4 E.F.	-	-	-	-	-	-	-	-	-	-	-	-	-			-
LB01	28	24 X 51	5-#11	#6	2	4"	6-#4 E.F.	-	-	-	-	-	-	-	-	-	-	-	-	-			-
LB01	27	24 X 47	5-#11	#6	2	4"	6-#4 E.F.	-	-	-	-	-	-	-	-	-	-	-	-	-			-
LB01	26	24 X 27	6-#11	#6	2	4"	5-#4 E.F.	-	-	-	-	-	-	-	-	-	-	-	-	-			2 Layers
LB01	25	24 X 27	6-#11	#6	2	4"	-	-	-	-	-	-	-	-	-	-	-	-	-	-			2 Layers
LB01	18 - 24	24 X 27	7-#11	#6	3	5"	-	-	-	-	-	-	-	-	-	-	-	-	-	-			2 Layers
LB01	17	26 X 40	4-#11	#4	2	12"	-	BUILT UP	65	34	12	1 1/2	1 1/2	5'-6"	2	12	6-#6	-	-	-	2	YES	-
LB01	8 - 16	26 X 27	2-#11	#4	2	10"	-	BUILT UP	65	21	12	3/4	7/8	4'-6"	2	7	3-#6	-	-	-	1	YES	-
LB01	7	26 X 27	4-#11	#4	2	10"	-	BUILT UP	65	21	12	3/4	7/8	4'-6"	2	7	3-#6	-	-	-	1	YES	-
LB01	6	26 X 40	4-#11	#4	2	10"	-	BUILT UP	65	34	12	1 1/4	1 1/2	5'-0"	2	9	3-#6	-	-	-	2	YES	-
LB01	5	30 X 77	6-#11	#5	2	8"	18-#4 E.F.	BUILT UP	65	70	10	1 1/2	1 1/4	6'-6"	2	10	3-#6	-	-	-			-
LB02	50	16 X 51	2-#11	#4	2	12"	6-#4 E.F.	BUILT UP	65	45	6	1	3/4	4'-6"	1	6	3-#6	-	-	-			-
LB02	49	16 X 47	2-#11	#5	2	8"	6-#4 E.F.	BUILT UP	65	41	6	1	3/4	6'-6"	1	14	4-#6	-	-	-			-
LB02	45 - 48	16 X 27	2-#11	#4	2	10"	-	BUILT UP	65	21	6	2	1 1/8	5'-6"	1	11	3-#6	-	-	-			-
LB02	44	16 X 40	2-#11	#5	2	8"	-	BUILT UP	65	34	6	2	1	8'-0"	1	13	3-#6	-	-	-			-
LB02	38 - 43	16 X 27	2-#11	#4	2	10"	-	BUILT UP	65	21	6	2	1 1/8	5'-0"	1	8	3-#6	-	-	-			-
LB02	37	16 X 27	2-#11	#4	2	10"	-	BUILT UP	65	21	6	2	7/8	5'-0"	1	9	3-#6	-	-	-			-
LB02	36	16 X 27	2-#11	#4	2	10"	-	BUILT UP	65	21	6	2	7/8	5'-0"	1	8	3-#6	-	-	-			-
LB02	35	16 X 40	2-#11	#5	2	10"	-	BUILT UP	65	34	6	1 3/4	7/8	7'-0"	1	9	3-#6	-	-	-			-
LB02	34	16 X 27	2-#11	#4	2	10"	5-#4 E.F.	BUILT UP	65	21	6	1 3/4	3/4	4'-6"	1	8	3-#6	-	-	-			-
LB02	32 - 33	16 X 27	2-#11	#4	2	10"	5-#4 E.F.	BUILT UP	65	21	6	2	3/4	4'-6"	1	8	3-#6	-	-	-			-
LB02	30 - 31	16 X 27	2-#11	#4	2	10"	-	BUILT UP	65	21	6	1 3/4	3/4	4'-6"	1	8	3-#6	-	-	-			-
LB02	29	16 X 27	2-#11	#4	2	10"	-	BUILT UP	65	21	6	1 1/4	1/2	5'-0"	1	6	3-#6	-	-	-			-
LB02	28	16 X 51	2-#11	#4	2	10"	6-#4 E.F.	BUILT UP	65	45	6	3/4	3/4	5'-0"	1	6	3-#6	-	-	-			-
LB02	27	16 X 47	2-#11	#4	2	10"	6-#4 E.F.	BUILT UP	65	41	6	3/4	3/4	5'-0"	1	5	3-#6	-	-	-			-
LB02	26	16 X 27	2-#11	#4	2	10"	-	BUILT UP	65	21	6	1 3/8	5/8	5'-0"	1	6	3-#6	-	-	-			-
LB02	25	16 X 27	2-#11	#4	2	10"	-	BUILT UP	65	21	6	1 3/4	1 5/8	5'-0"	1	8	3-#6	-	-	-			-
LB02	18 - 24	16 X 27	2-#11	#4	2	10"	-	BUILT UP	65	21	6	2	7/8	5'-0"	1	9	3-#6	-	-	-			-
LB02	17	16 X 40	2-#11	#5	2	10"	-	BUILT UP	65	34	6	1 3/4	7/8	7'-0"	1	12	3-#6	-	-	-			-
LB02	16	16 X 27	2-#11	#4	2	10"	-	BUILT UP	65	21	6	2	3/4	5'-0"	1	10	3-#6	-	-	-			-
LB02	10 - 15	16 X 27	2-#11	#4	2	10"	-	BUILT UP	65	21	6	2	1 1/8	5'-0"	1	10	3-#6	-	-	-			-
LB02	08 - 09	16 X 27	2-#11	#4	2	10"	-	BUILT UP	65	21	6	2	7/8	5'-0"	1	10	3-#6	-	-	-			-
LB02	07	16 X 27	2-#11	#4	2	10"	-	BUILT UP	65	21	6	1 3/8	5/8	4'-6"	1	10	3-#6	-	-	-			-
LB02	06	16 X 40	2-#11	#4	2	10"	-	BUILT UP	65	34	6	1	5/8	5'-0"	1	10	3-#6	-	-	-			-
LB03	50	16 X 51	4-#11	#5	2	4"	6-#4 E.F.	BUILT UP	65	45	6	2	7/8	8'-0"	1	14	3-#6	-	-	-			-
LB03	49	16 X 47	2-#11	#5	2	8"	6-#4 E.F.	BUILT UP	65	41	6	1	3/4	7'-0"	1	18	5-#6	-	-	-			-
LB03	48	16 X 27	2-#11	#4	2	10"	-	BUILT UP	65	21	6	1 3/8	5/8	4'-6"	1	6	3-#6	-	-	-			-
LB03	47	16 X 27	2-#11	#4	2	10"	-	BUILT UP	65	21	6	1 3/4	3/4	4'-6"	1	7	3-#6	-	-	-			-
LB03	45 - 46	16 X 27	2-#11	#4	2	10"	-	BUILT UP	65	21	6	2	7/8	4'-6"	1	7	3-#6	-	-	-			-
LB03	44	16 X 40	2-#11	#5	2	8"	-	BUILT UP	65	34	6	2	7/8	7'-0"	1	10	3-#6	-	-	-			-
LB03	42 - 43	16 X 27	2-#11	#4	2	10"	-	BUILT UP	65	21	6	2	7/8	5'-0"	1	8	3-#6	-	-	-			-
LB03	37 - 41	16 X 27	2-#11	#4	2	10"	-	BUILT UP	65	21	6	2	1	5'-0"	1	8	3-#6	-	-	-			-
LB03	36	16 X 27	2-#11	#4	2	10"	-	BUILT UP	65	21	6	2	7/8	5'-0"	1	8	3-#6	-	-	-			-
LB03	35	16 X 40	4-#11	#5	2	6"	-	BUILT UP	65	34	6	2	7/8	7'-0"	1	11	3-#6	-	-	-			-
LB03	31 - 34	16 X 27	2-#11	#4	2	10"	5-#4 E.F.	BUILT UP	65	21	6	2	7/8	5'-0"	1	9	3-#6	-	-	-			-
LB03	30	16 X 27	2-#11	#4	2	10"	-	BUILT UP	65	21	6	1 3/4	3/4	5'-0"	1	8	3-#6	-	-	-			-
LB03	29	16 X 27	2-#11	#4	2	10"	-	BUILT UP	65	21	6	1 3/8	5/8	5'-0"	1	6	3-#6	-	-	-			-
LB03	28	16 X 51	2-#11	#4	2	10"	6-#4 E.F.	BUILT UP	65	45	6	1	3/4	5'-0"	1	7	3-#6	-	-	-			-
LB03	27	16 X 47	2-#11	#4	2	10"	6-#4 E.F.	BUILT UP	65	41	6	1	3/4	5'-0"	1	7	3-#6	-	-	-			-
LB03	26	16 X 27	2-#11	#4	2	10"	-	BUILT UP	65	21	6	1 3/4	3/4	5'-0"	1	7	3-#6	-	-	-			-
LB03	25	16 X 27	2-#11	#4	2	10"	-	BUILT UP	65	21	6	2	7/8	5'-0"	1	9	3-#6	-	-	-			-
LB03	19 - 24	16 X 27	2-#11	#4	2	10"	-	BUILT UP	65	21	6	2	1	5'-0"	1	10	3-#6	-	-	-			-
LB03	18	16 X 27	2-#11	#4	2	10"	-	BUILT UP	65	21	6	2	7/8	5'-0"	1	10	3-#6	-	-	-			-
LB03	17	16 X 40	4-#11	#5	2	6"	-	BUILT UP	65	34	6	1 3/4	7/8	6'-6"	1	11	3-#6	-	-	-			-
LB03	16	16 X 27	2-#11	#4	2	10"	-	BUILT UP	65	21	6	2	7/8	5'-0"	1	9	3-#6	-	-	-			-
LB03	13 - 15	16 X 27	2-#11	#4	2	10"	-	BUILT UP	65	21	6	2	1	5'-0"	1	9	3-#6	-	-	-			-
LB03	09 - 12	16 X 27	2-#11	#4	2	10"	-	BUILT UP	65	21	6	2	7/8	5'-0"	1	9	3-#6	-	-	-			-
LB03	08	16 X 27	2-#11	#4	2	10"	-	BUILT UP	65	21	6	1 3/4	3/4	5'-0"	1	7	3-#6	-	-	-			-
LB03	07	16 X 27	2-#11	#4	2	10"	-	BUILT UP	65	21	6	1 3/8	5/8	5'-0"	1	7	3-#6	-	-	-			-
LB03	06	16 X 40	2-#11	#4	2	12"	-	BUILT UP	65	34	6	1	5/8	5'-0"	1	8	3-#6	-	-	-			-
LB04	ROOF	18 X 84	4-#11	#5	2	6"	19-#4 E.F.	-	-	-	-	-	-	-	-	-	-	-	-	-			2 Layers
LB04	71	18 X 59	4-#10	#4	2	12"	7-#4 E.F.	BUILT UP	65	49	8	3/4	1	4'-6"	1	6	3-#6	-	-	-	3	YES	-
LB04	70	18 X 32	4-#11	#5	3	6"	3-#4 E.F.	-	-	-	-	-	-	-	-	-	-	-	-	-			2 Layers
LB04	64 - 69	18 X 30	4-#11	#5	3	6"	-	-	-	-	-	-	-	-	-	-	-	-	-	-	1	NO	2 Layers
LB04	63	18 X 43	4-#11	#5	3	5"	6-#4 E.F.	-	-	-	-	-	-	-	-	-	-	-	-	-	2	YES	2 Layers
LB04	61 - 62	18 X 30	4-#11	#5	3	6"	-	-	-	-	-	-	-	-	-	-	-	-	-	-	1	YES	2 Layers
LB04	60	18 X 30	2-#11	#4	2	10"	-	BUILT UP	65	21	8	3/4	7/8	5'-0"	1	8	3-#6	-	-	-	1	YES	-
LB04	58 - 59	18 X 27	2-#11	#4	2	10"	-	BUILT UP	65	21	8	7/8	7/8	4'-6"	1	5	3-#6	-	-	-	1	YES	-
LB04	57	18 X 27	2-#11	#4	2	10"	-	BUILT UP	65	18	8	7/8	7/8	4'-6"	1	6	3-#6	-	-	-	1	YES	-
LB04	55 - 56	18 X 27	2-#11	#4	2	10"	-	BUILT UP	65	21	8	7/8	7/8	4'-6"	1	5	3-#6	-	-	-	1	YES	-
LB04	54	18 X 40	2-#11	#4	2	10"	-	BUILT UP	65	31	8	1	1 1/2	5'-6"	1	16	4-#6	-	-	-	2	YES	-
LB04	52 - 53	18 X 27	2-#11	#4	2	10"	-	BUILT UP	65	21	8	7/8	7/8	4'-6"	1	6	3-#6	-	-	-	1	YES	-
LB04	51	18 X 27	2-#11	#4	2	10"	-	BUILT UP	65	18	8	7/8	3/4	4'-6"	1	5	3-#6	-	-	-	1	YES	-
LB04	50	18 X 51	2-#11	#4	2	12"	6-#4 E.F.	BUILT UP	65	45	8	1	3/4	5'-6"	2	8	3-#6	-	-	-			-
LB04	49	18 X 47	2-#11	#4	2	12"	6-#4 E.F.	BUILT UP	65	41	8	1	1	5'-6"	1	15	3-#6	-	-	-	4	YES	-
LB04	48	18 X 27	2-#11	#4	2	10"	-	BUILT UP	65	18	8	1	1	4'-6"	1	6	3-#6	-	-	-	1	YES	-
LB04	46 - 47	18 X 27	2-#11	#4	2	10"	-	BUILT UP	65	21	8	1	1 1/4	4'-6"	1	6	3-#6	-	-	-	1	YES	-
LB04	45	18 X 27	2-#11	#4	2	10"	-	BUILT UP	65	18	8	1 1/4	1 1/4	4'-6"	1	7	3-#6	-	-	-	1	YES	-

NOTES:

1. FOR LINK BEAM LOCATIONS SEE CORRESPONDING PLAN.
2. FOR BALANCE OF TYPICAL DETAILS AND TABLES SEE DWG. S-849 & S-949.
3. CONCRETE LINK BEAM STRENGTH SHALL BE THE SAME AS CONCRETE STRENGTH OF SHEARWALL.
4. TOP & BOTT. REINF. SHALL BE ONE LAYER UNLESS OTHERWISE NOTED.
5. FOR EMBEDED STEEL LINK BEAM TYPICAL. SEE DWG. S-849.
6. REFER TO S-849 FOR TYPICAL BEAM DETAIL WITH SLEEVES/OPENINGS.

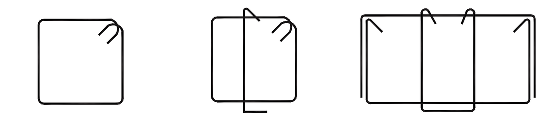

TYPE 1 TYPE 1C TYPE 2

STIRRUP TYPES
N.T.S.

121185528 Job Number
ES247936467 Scan Code

KEY PLAN:

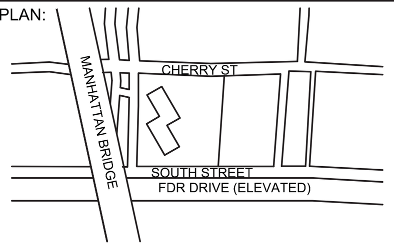

PROJECT NORTH

TRUE NORTH

DEVELOPER:
EXTELL DEVELOPMENT COMPANY
805 Third Ave, 7th Floor
New York, NY 10022
TEL: 212-712-6000 FAX: 212-712-6100

ARCHITECT OF RECORD:
AAI ARCHITECTS, P.C.
14 Wall Street, 2nd Floor
New York, NY 10005
TEL: 212-964-4040 FAX: 212-964-4090

INTERIOR DESIGNER:
MEYER DAVIS
180 Varick St, suite 404
New York, NY 10014
TEL: 212-627-5574

LANDSCAPE DESIGNER:
WEST 8 URBAN DESIGN & LANDSCAPE ARCHITECTURE P.C.
333 Hudson Street, Suite 905
New York, NY 10013
TEL: 212-285-0088 FAX: 212-285-0228

STRUCTURAL ENGINEERS:
WSP
228 East 45th Street
New York, NY 10017
TEL: 212-687-9888 FAX: 646-487-5501

MEP ENGINEERS:
ICOR ASSOCIATES, LLC
485 C Route 1 South, Suite 200
Iseline, NJ 08830
TEL: 908-272-3300 FAX: 908-272-4440

GEOTECHNICAL ENGINEERS:
LANGAN ENGINEERING & ENVIRONMENTAL SERVICES
21 Penn Plaza - 360 West 31st Street, 8th Floor
New York, NY 10001
TEL: 212.479.5400 FAX: 212.479.5444

No.	DESCRIPTION:	DATE:
1	CONCRETE BID PACKAGE	03-06-15
2	ADDENDUM #5	05-01-15
3	ISSUED FOR FILING	07-28-15

Discrepancies must be reported immediately to the Architect before proceeding. Only figured dimensions are to be used. Contractors must check all dimensions on site. This drawing is protected by copyright.

ALL DIMENSIONS ARE SHOWN IN IMPERIAL.

CONSULTANT: WSP

PROJECT:
250 SOUTH STREET
NEW YORK, NY

DRAWING TITLE:
LINK BEAM SCHEDULE 1

SEAL & SIGNATURE: STATE OF NEW YORK AHMAD RAHIMIAN No. 065537 LICENSED PROFESSIONAL ENGINEER

DATE:	07/25/14
PROJECT No:	1302510
DRAWN:	CADD
CHK:	CL
SCALE:	N.T.S.
REV:	
DWG No:	S-945.00
DOB PAGE No:	of

DOB EMPLOYEE STAMP:
Damian Titus
Buildings
APPROVED
Under Directive 2 of 1975
AMENDED APPLICATION
Date: 10/08/2015
NYC Development Hub

DOB B-SCAN:

MARK	FLOOR	CONCRETE BEAM SIZE b x h (IN)	TOP & BOTTOM REINF.	STIRRUPS SIZE	STIRRUPS LEGS	STIRRUPS SPACING	SKIN REINF.	STEEL SECTION TYPE	Fy (ksi)	d (IN)	bf (IN)	tf (IN)	tw (IN)	DEVELOPMENT LENGTH	STUDS ROWS	STUDS COLS.	ADD'L HORIZ. U-BARS @ T&B OF BEAM	T/C THREADED RODS	PROVIDE STIFF. PL. AT FACE OF WALL	ADD'L STIFF. PL. FROM FACE OF WALL	STEEL BEAM WEB OPENING TYPE	WEB DOUBLER	REMARKS
LB04	44	18 X 40	2-#11	#4	2	10"	-	BUILT UP	65	34	8	1 3/4	1 1/2	6'-0"	1	8	3-#6	-	-	-	2	YES	-
LB04	43	18 X 27	2-#11	#4	2	10"	-	BUILT UP	65	21	8	1 3/4	1 1/4	4'-6"	1	7	3-#6	-	-	-	1	YES	-
LB04	42	18 X 27	2-#11	#4	2	10"	-	BUILT UP	65	18	8	1 3/4	1 1/4	4'-6"	1	7	3-#6	-	-	-	1	YES	-
LB04	40 - 41	18 X 27	2-#11	#4	2	10"	-	BUILT UP	65	21	8	1 3/4	1 1/4	4'-6"	1	7	3-#6	-	-	-	1	YES	-
LB04	39	18 X 27	2-#11	#4	2	10"	-	BUILT UP	65	18	8	1 3/4	1 1/4	4'-6"	1	8	3-#6	-	-	-	1	YES	-
LB04	37 - 38	18 X 27	2-#11	#4	2	10"	-	BUILT UP	65	21	8	1 3/4	1 1/4	4'-6"	1	7	3-#6	-	-	-	1	YES	-
LB04	36	18 X 27	2-#11	#4	2	10"	-	BUILT UP	65	18	8	1 3/4	1 1/4	4'-6"	1	8	3-#6	-	-	-	1	YES	-
LB04	35	24 X 40	4-#11	#5	2	8"	-	BUILT UP	65	34	14	2	1 3/4	5'-6"	2	12	8-#6	-	-	-	2	YES	-
LB04	34	24 X 27	2-#11	#4	2	10"	-	BUILT UP	65	21	14	1 3/8	1 1/4	4'-6"	2	8	5-#6	-	-	-	1	YES	-
LB04	33	24 X 27	2-#11	#4	2	10"	-	BUILT UP	65	18	14	1 3/8	1 1/4	4'-6"	2	7	4-#6	-	-	-	1	YES	-
LB04	31 - 32	24 X 27	2-#11	#4	2	10"	-	BUILT UP	65	21	14	1 1/4	1 1/4	4'-6"	2	7	4-#6	-	-	-	1	YES	-
LB04	30	24 X 27	2-#11	#4	2	10"	-	BUILT UP	65	18	14	1	1 1/8	4'-6"	2	8	5-#6	-	-	-	1	YES	-
LB04	29	24 X 27	2-#11	#4	2	10"	-	BUILT UP	65	21	14	1	1 1/4	4'-6"	2	7	4-#6	-	-	-	1	YES	-
LB04	28	24 X 51	4-#11	#5	2	5"	6-#4 E.F.	BUILT UP	65	42	14	1	7/8	5'-6"	2	10	6-#6	-	-	-			-
LB04	27	24 X 47	4-#11	#4	2	12"	6-#4 E.F.	BUILT UP	65	41	14	2	1 5/8	5'-6"	2	10	6-#6	-	-	-	3	YES	-
LB04	26	24 X 27	2-#11	#4	2	10"	-	BUILT UP	65	21	14	1 1/4	1 1/8	4'-6"	2	8	5-#6	-	-	-	1	YES	-
LB04	25	24 X 27	2-#11	#4	2	10"	-	BUILT UP	65	21	14	1 3/8	1 1/4	4'-6"	2	9	6-#6	-	-	-	1	YES	-
LB04	24	24 X 27	2-#11	#4	2	10"	-	BUILT UP	65	18	14	1 3/8	1 1/4	4'-6"	2	9	6-#6	-	-	-	1	YES	-
LB04	22 - 23	24 X 27	2-#11	#4	2	10"	-	BUILT UP	65	21	14	1 3/8	1 3/8	4'-6"	2	10	7-#6	-	-	-	1	YES	-
LB04	21	24 X 27	2-#11	#4	2	10"	-	BUILT UP	65	18	14	1 3/8	1 1/2	4'-6"	2	10	7-#6	-	-	-	1	YES	-
LB04	19 - 20	24 X 27	2-#11	#4	2	10"	-	BUILT UP	65	21	14	1 3/8	1 3/8	4'-6"	2	10	7-#6	-	-	-	1	YES	-
LB04	18	24 X 27	2-#11	#4	2	10"	-	BUILT UP	65	18	14	1 3/8	1 1/2	4'-6"	2	10	7-#6	-	-	-	1	YES	-
LB04	17	24 X 40	4-#11	#4	2	6"	-	BUILT UP	65	34	14	2	2	6'-6"	2	12	7-#6	-	-	-	2	YES	-
LB04	16	24 X 27	2-#11	#4	2	10"	-	BUILT UP	65	21	14	1 3/8	1 3/8	5'-0"	2	10	7-#6	-	-	-	1	YES	-
LB04	15	24 X 27	2-#11	#4	2	10"	-	BUILT UP	65	18	14	1 3/8	1 1/2	5'-0"	2	11	8-#6	-	-	-	1	YES	-
LB04	13 - 14	24 X 27	2-#11	#4	2	10"	-	BUILT UP	65	21	14	1 3/8	1 3/8	5'-0"	2	11	8-#6	-	-	-	1	YES	-
LB04	12	24 X 27	2-#11	#4	2	10"	-	BUILT UP	65	18	14	1 3/8	1 1/2	5'-0"	2	10	7-#6	-	-	-	1	YES	-
LB04	10 - 11	24 X 27	2-#11	#4	2	10"	-	BUILT UP	65	21	14	1 3/8	1 3/8	5'-0"	2	11	8-#6	-	-	-	1	YES	-
LB04	09	24 X 27	2-#11	#4	2	10"	-	BUILT UP	65	18	14	1 3/8	1 1/4	5'-0"	2	9	6-#6	-	-	-	1	YES	-
LB04	08	24 X 27	2-#11	#4	2	10"	-	BUILT UP	65	21	14	1 3/8	1 1/4	5'-0"	2	9	6-#6	-	-	-	1	YES	-
LB04	07	24 X 27	2-#11	#4	2	10"	-	BUILT UP	65	18	14	1 1/4	1 1/8	5'-0"	2	10	7-#6	-	-	-	1	YES	-
LB04	06	24 X 40	4-#11	#4	2	12"	-	BUILT UP	65	34	14	1 5/8	1 1/2	6'-0"	2	8	4-#6	-	-	-	2	YES	-
LB04	05	30 X 77	6-#11	#5	2	6"	18-#4 E.F.	BUILT UP	65	67	14	2	1 1/4	7'-0"	2	12	6-#6	-	-	-			-
LB04	01	30 X 43	24-#8	#5	2	6"	6-#4 E.F.	-	-	-	-	-	-	-	-	-	-	-	-	-			4 Layers
LB05	ROOF	18 X 84	3-#11	#5	2	12"	19-#4 E.F.	-	-	-	-	-	-	-	-	-	-	-	-	-			-
LB05	71	18 X 59	3-#11	#5	2	12"	7-#4 E.F.	-	-	-	-	-	-	-	-	-	-	-	-	-			-
LB05	70	18 X 32	3-#11	#5	2	6"	-	-	-	-	-	-	-	-	-	-	-	-	-	-			-
LB05	69	18 X 30	3-#11	#5	2	6"	-	-	-	-	-	-	-	-	-	-	-	-	-	-			-
LB05	68	18 X 30	4-#11	#5	3	6"	-	-	-	-	-	-	-	-	-	-	-	-	-	-			2 Layers
LB05	66 - 67	18 X 30	2-#11	#4	2	10"	-	BUILT UP	65	24	6	3/4	5/8	5'-0"	1	5	3-#6	-	-	-	5	YES	-
LB05	64 - 65	18 X 30	2-#11	#4	2	10"	-	BUILT UP	65	24	6	1	5/8	5'-0"	1	5	3-#6	-	-	-	5	YES	-
LB05	63	18 X 43	2-#11	#4	2	10"	6-#4 E.F.	BUILT UP	65	37	6	1	3/4	5'-0"	1	8	3-#6	-	-	-	5	YES	-
LB05	61 - 62	18 X 30	2-#11	#4	2	10"	-	BUILT UP	65	24	6	1	3/4	5'-0"	1	8	3-#6	-	-	-	5	YES	-
LB05	60	18 X 30	2-#11	#4	2	10"	-	BUILT UP	65	24	6	1 1/2	1	5'-0"	1	10	3-#6	-	-	-	5	YES	-
LB05	55 - 59	18 X 27	2-#11	#4	2	10"	-	BUILT UP	65	21	6	2	7/8	4'-6"	1	7	3-#6	-	-	-	5	YES	-
LB05	54	18 X 40	4-#11	#5	2	5"	-	BUILT UP	65	34	6	2	1 1/4	6'-0"	1	10	3-#6	-	-	-	5	YES	-
LB05	51 - 53	18 X 27	2-#11	#4	2	10"	-	BUILT UP	65	21	6	1 1/2	7/8	4'-6"	1	7	3-#6	-	-	-	5	YES	-
LB05	50	18 X 51	2-#11	#5	2	12"	6-#4 E.F.	BUILT UP	65	45	6	1 1/2	3/4	6'-0"	1	8	3-#6	-	-	-	5	YES	-
LB05	49	18 X 47	2-#11	#5	2	12"	6-#4 E.F.	BUILT UP	65	41	6	1 3/8	7/8	5'-6"	1	8	3-#6	-	-	-	5	YES	-
LB05	45 - 48	18 X 27	2-#11	#4	2	10"	-	BUILT UP	65	21	6	1 1/2	7/8	4'-6"	1	6	3-#6	-	-	-	5	YES	-
LB05	44	18 X 40	4-#11	#5	2	6"	-	BUILT UP	65	34	6	2	1 3/8	5'-6"	1	6	3-#6	-	-	-			-
LB05	36 - 43	18 X 27	2-#11	#4	2	10"	-	BUILT UP	65	21	6	1 5/8	1	4'-6"	1	7	3-#6	-	-	-	5	YES	-
LB05	35	24 X 40	4-#11	#5	2	5"	-	BUILT UP	65	34	6	2	1 1/2	6'-0"	1	7	3-#6	-	-	-	5	YES	-
LB05	29 - 34	24 X 27	2-#11	#4	2	10"	-	BUILT UP	65	21	6	1 5/8	1	4'-6"	1	5	3-#6	-	-	-	5	YES	-
LB05	28	24 X 51	4-#11	#5	2	5"	6-#4 E.F.	BUILT UP	65	45	6	1 1/2	7/8	6'-6"	1	10	3-#6	-	-	-	5	YES	-
LB05	27	24 X 47	4-#11	#5	2	5"	6-#4 E.F.	BUILT UP	65	41	6	2	1 1/2	6'-0"	1	10	3-#6	-	-	-	5	YES	-
LB05	18 - 26	24 X 27	2-#11	#4	2	10"	-	BUILT UP	65	21	6	2	1 1/8	4'-6"	1	6	3-#6	-	-	-	5	YES	-
LB05	17	24 X 40	4-#11	#5	2	5"	-	BUILT UP	65	34	6	2	1 1/2	6'-0"	1	12	3-#6	-	-	-	5	YES	-
LB05	07 - 16	24 X 27	2-#11	#4	2	10"	-	BUILT UP	65	21	6	2	1 1/8	4'-6"	1	7	3-#6	-	-	-	5	YES	-
LB05	06	24 X 40	2-#11	#4	2	10"	-	BUILT UP	65	34	6	1	1	4'-6"	1	8	3-#6	-	-	-	5	YES	-
LB05	05	26 X 108	7-#11	#5	2	10"	51-#4 E.F.	BUILT UP	65	102	10	1 1/2	1 3/8	6'-6"	2	9	3-#6	-	-	-	5	YES	-
LB05	04	26 X 96	6-#11	#5	2	6"	30-#4 E.F.	BUILT UP	65	90	10	1 1/2	1 1/4	7'-0"	2	10	6-#6	-	-	-	5	YES	-
LB05	01	26 X 48	9-#11	#5	2	6"	6-#4 E.F.	-	-	-	-	-	-	-	-	-	-	-	-	-			2 Layers
LB06	ROOF	18 X 84	6-#11	#5	2	5"	26-#4 E.F.	-	-	-	-	-	-	-	-	-	-	-	-	-			2 Layers
LB06	71	18 X 59	4-#11	#5	2	5"	7-#4 E.F.	-	-	-	-	-	-	-	-	-	-	-	-	-			2 Layers
LB06	70	18 X 32	3-#11	#6	2	4"	4-#4 E.F.	-	-	-	-	-	-	-	-	-	-	-	-	-			-
LB06	69	18 X 30	4-#11	#6	2	4"	3-#4 E.F.	-	-	-	-	-	-	-	-	-	-	-	-	-			2 Layers
LB06	68	18 X 30	2-#11	#4	2	12"	-	BUILT UP	65	24	8	3/4	1/2	4'-6"	1	6	3-#6	-	-	-	1	NO	-
LB06	64 - 67	18 X 30	2-#11	#4	2	10"	-	BUILT UP	65	24	8	7/8	5/8	4'-6"	2	6	3-#6	-	-	-	1	YES	-
LB06	63	18 X 43	2-#11	#4	2	8"	6-#4 E.F.	BUILT UP	65	37	8	1	7/8	5'-6"	2	7	3-#6	-	-	-	2	YES	-
LB06	61 - 62	18 X 30	2-#11	#4	2	8"	-	BUILT UP	65	24	8	1	3/4	5'-0"	2	6	3-#6	-	-	-	1	YES	-
LB06	60	18 X 30	2-#11	#4	2	10"	-	BUILT UP	65	24	8	2	1	6'-0"	2	8	4-#6	-	-	-	1	YES	-
LB06	56 - 59	18 X 27	2-#11	#4	2	10"	-	BUILT UP	65	21	8	2	1 1/8	5'-0"	2	7	4-#6	-	-	-	1	YES	-
LB06	55	18 X 27	2-#11	#4	2	10"	-	BUILT UP	65	21	8	2	1 1/8	5'-0"	2	7	4-#6	-	-	-	1	YES	-
LB06	54	18 X 40	2-#11	#5	2	8"	5-#4 E.F.	BUILT UP	65	34	8	2	1 5/8	7'-0"	2	9	4-#6	-	-	-	2	YES	-
LB06	51 - 53	18 X 27	2-#11	#4	2	10"	-	BUILT UP	65	21	8	1 1/2	7/8	4'-6"	2	7	4-#6	-	-	-	1	YES	-
LB06	50	18 X 51	2-#11	#5	2	10"	5-#4 E.F.	BUILT UP	65	45	8	1	3/4	4'-6"	2	6	3-#6	-	-	-			-
LB06	49	18 X 47	2-#11	#5	2	10"	6-#4 E.F.	BUILT UP	65	41	8	1 3/8	1	6'-0"	2	8	3-#6	-	-	-	4	YES	-
LB06	45 - 48	18 X 27	2-#11	#4	2	10"	-	BUILT UP	65	21	8	1 1/4	3/4	4'-6"	1	8	3-#6	-	-	-	1	YES	-
LB06	44	18 X 40	2-#11	#4	2	10"	5-#4 E.F.	BUILT UP	65	34	8	1 1/4	1 1/4	5'-0"	2	6	3-#6	-	-	-	2	YES	-
LB06	36 - 43	18 X 27	2-#11	#4	2	10"	-	BUILT UP	65	21	8	1 1/4	7/8	4'-6"	1	6	3-#6	-	-	-	1	YES	-
LB06	35	24 X 40	4-#11	#5	2	6"	5-#4 E.F.	BUILT UP	65	34	10	1 3/4	1 5/8	4'-6"	2	9	6-#6	-	-	-	2	YES	-
LB06	29 - 34	24 X 27	2-#11	#4	2	10"	-	BUILT UP	65	21	10	1 3/4	7/8	4'-6"	2	7	4-#6	-	-	-	1	YES	-
LB06	28	24 X 51	4-#11	#5	2	6"	5-#4 E.F.	BUILT UP	65	45	10	1 1/2	3/4	4'-6"	2	5	3-#6	-	-	-			-
LB06	27	24 X 47	4-#11	#5	2	10"	6-#4 E.F.	BUILT UP	65	41	14	2	1 3/4	4'-6"	2	7	3-#6	-	-	-	3	YES	-
LB06	18 - 26	24 X 27	2-#11	#4	2	10"	-	BUILT UP	65	21	10	1 1/2	1	4'-6"	2	6	3-#6	-	-	-	1	YES	-
LB06	17	24 X 40	4-#11	#5	2	8"	5-#4 E.F.	BUILT UP	65	34	14	2	1 5/8	4'-6"	2	9	6-#6	-	-	-	2	YES	-
LB06	07 - 16	24 X 27	2-#11	#4	2	10"	-	BUILT UP	65	21	10	1 1/2	1 1/8	4'-6"	2	7	4-#6	-	-	-	1	YES	-
LB06	06	24 X 40	4-#11	#4	2	12"	5-#4 E.F.	BUILT UP	65	34	10	1 1/2	1 1/4	5'-6"	2	6	3-#6	-	-	-	2	YES	-
LB06	05	26 X 108	8-#11	#5	2	8"	51-#4 E.F.	BUILT UP	65	102	10	1 1/2	1 3/8	6'-0"	2	6	3-#6	-	-	-			-
LB06	04	26 X 72	9-#11	#6	2	5"	13-#4 E.F.	-	-	-	-	-	-	-	-	-	-	-	-	-			2 Layers
LB06	01	26 X 36	9-#11	#5	2	5"	-	-	-	-	-	-	-	-	-	-	-	-	-	-			2 Layers
LB07	ROOF	12 X 84	4-#11	#5	2	8"	19-#4 E.F.	-	-	-	-	-	-	-	-	-	-	-	-	-			2 Layers
LB07	71	12 X 59	4-#11	#5	2	5"	6-#4 E.F.	-	-	-	-	-	-	-	-	-	-	-	-	-			2 Layers
LB07	70	12 X 32	3-#11	#4	2	6"	-	-	-	-	-	-	-	-	-	-	-	-	-	-			2 Layers
LB07	69	12 X 30	3-#11	#4	2	6"	-	-	-	-	-	-	-	-	-	-	-	-	-	-			2 Layers
LB07	64 - 68	12 X 30	3-#11	#5	2	6"	-	-	-	-	-	-	-	-	-	-	-	-	-	-			2 Layers
LB07	63	12 X 43	4-#11	#5	2	5"	6-#4 E.F.	-	-	-	-	-	-	-	-	-	-	-	-	-			2 Layers
LB07	61 - 62	12 X 30	4-#11	#5	2	6"	-	-	-	-	-	-	-	-	-	-	-	-	-	-			2 Layers
LB07	60	18 X 30	5-#11	#5	2	5"	-	-	-	-	-	-	-	-	-	-	-	-	-	-			2 Layers
LB07	55 - 59	18 X 27	4-#11	#5	2	5"	-	-	-	-	-	-	-	-	-	-	-	-	-	-			2 Layers
LB07	54	18 X 40	6-#11	#6	2	6"	5-#4 E.F.	-	-	-	-	-	-	-	-	-	-	-	-	-			2 Layers
LB07	51 - 53	18 X 27	4-#11	#4	2	6"	-	-	-	-	-	-	-	-	-	-	-	-	-	-			2 Layers
LB07	01	72 X 77	40-#11	#6	10	5"	18-#4 E.F.	-	-	-	-	-	-	-	-	-	-	-	-	-			3 Layers
LB08	ROOF	16 X 84	6-#11	#5	2	8"	19-#4 E.F.	-	-	-	-	-	-	-	-	-	-	-	-	-			2 Layers
LB08	71	16 X 59	6-#11	#5	3	5"	7-#4 E.F.	-	-	-	-	-	-	-	-	-	-	-	-	-			2 Layers
LB08	70	16 X 32	6-#11	#5	2	5"	3-#4 E.F.	-	-	-	-	-	-	-	-	-	-	-	-	-			2 Layers
LB08	67 - 69	16 X 30	6-#11	#6	2	5"	3-#4 E.F.	-	-	-	-	-	-	-	-	-	-	-	-	-	1	NO	2 Layers
LB08	64 - 66	16 X 30	2-#11	#4	2	12"	-	BUILT UP	65	24	6	1 3/8	5/8	5'-0"	1	5	3-#6	-	-	-	1	NO	-
LB08	63	16 X 43	4-#11	#4	2	12"	6-#4 E.F.	BUILT UP	65	37	6	1 1/4	7/8	5'-0"	1	7	3-#6	-	-	-	2	YES	-
LB08	61 - 62	16 X 30	2-#11	#4	2	12"	-	BUILT UP	65	24	6	1 1/4	3/4	5'-0"	1	5	3-#6	-	-	-	1	YES	-
LB08	60	16 X 30	2-#11	#4	2	12"	-	BUILT UP	65	24	6	2	1	5'-0"	1	8	3-#6	-	-	-	1	YES	-
LB08	56 - 59	16 X 27	2-#11	#4	2	10"	-	BUILT UP	65	21	6	2	7/8	5'-0"	1	10	3-#6	-	-	-	1	YES	-
LB08	54	16 X 40	4-#11	#5	2	8"	-	BUILT UP	65	34	6	2	1 1/2	6'-6"	1	13	3-#6	-	-	-	2	YES	-
LB08	52 - 53	16 X 27	2-#11	#4	2	10"	-	BUILT UP	65	21	6	1 3/4	3/4	5'-0"	1	11	3-#6	-	-	-	1	YES	-
LB08	51	16 X 27	2-#11	#4	2	10"	-	BUILT UP	65	21	6	1 3/8	3/4	5'-0"	1	8	3-#6	-	-	-	1	YES	-
LB08	50	18 X 51	4-#11	#6	2	5"	6-#4 E.F.	BUILT UP	65	45	8	1 5/8	1 3/8	9'-0"	2	14	8-#6	-	-	-			-
LB08	49	18 X 47	3-#11	#5	2	6"	6-#4 E.F.	BUILT UP	65	41	8	3/4	1	5'-6"	2	7	3-#6	-	-	-	4	YES	-
LB08	45 - 48	18 X 27	2-#11	#4	2	10"	-	BUILT UP	65	21	8	1 1/8	3/4	4'-6"	2	5	3-#6	-	-	-	1	YES	-

NOTE
1. FOR NOTES SEE DWG. S-945.

KEY PLAN:

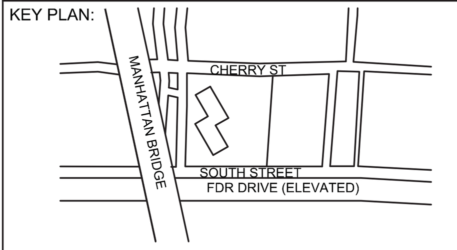

PROJECT NORTH | TRUE NORTH

DEVELOPER:
EXTELL DEVELOPMENT COMPANY
805 Third Ave, 7th Floor
New York, NY 10022
TEL: 212-712-6000 FAX: 212-712-6100

ARCHITECT OF RECORD:
AAI ARCHITECTS, P.C.
14 Wall Street, 2nd Floor
New York, NY 10005
TEL: 212-964-4040 FAX: 212-964-4090

INTERIOR DESIGNER:
MEYER DAVIS
180 Varick St, suite 404
New York, NY 10014
TEL: 212-627-5574

LANDSCAPE DESIGNER:
WEST 8 URBAN DESIGN & LANDSCAPE ARCHITECTURE P.C.
333 Hudson Street, Suite 905
New York, NY 10013
TEL: 212-285-0088 FAX: 212-285-0228

STRUCTURAL ENGINEERS:
WSP
228 East 45th Street
New York, NY 10017
TEL: 212-687-9888 FAX: 646-487-5501

MEP ENGINEERS:
ICOR ASSOCIATES, LLC
485 C Route 1 South, Suite 200
Iseline, NJ 08830
TEL: 908-272-3300 FAX: 908-272-4440

GEOTECHNICAL ENGINEERS:
LANGAN ENGINEERING & ENVIRONMENTAL SERVICES
21 Penn Plaza - 360 West 31st Street, 8th Floor
New York, NY 10001
TEL: 212.479.5400 FAX: 212.479.5444

No.	DESCRIPTION:	DATE:
1	CONCRETE BID PACKAGE	03-06-15
2	ADDENDUM #5	05-01-15
3	ISSUED FOR FILING	07-28-15

Discrepancies must be reported immediately to the Architect before proceeding. Only figured dimensions are to be used. Contractors must check all dimensions on site. This drawing is protected by copyright.

ALL DIMENSIONS ARE SHOWN IN IMPERIAL.

CONSULTANT: WSP

PROJECT:
250 SOUTH STREET
NEW YORK, NY

DRAWING TITLE:
LINK BEAM SCHEDULE 2

SEAL & SIGNATURE: STATE OF NEW YORK · AHMAD RAHIMIAN · No. 065537 · LICENSED PROFESSIONAL ENGINEER

DATE: 07/25/14
PROJECT No: 1302510
DRAWN: CADD
REV:
CHK: CL
SCALE: N.T.S.
DWG No: **S-946.00**
DOB PAGE No: of

DOB EMPLOYEE STAMP: Damian Titus · Buildings · APPROVED · Under Directive 2 of 1975 · AMENDED APPLICATION · Date: 10/08/2015 · NYC Development Hub

DOB B-SCAN:

MARK	FLOOR	CONCRETE BEAM						STEEL SECTION															REMARKS
		SIZE b x h (IN)	TOP & BOTTOM REINF.	STIRRUPS SIZE	STIRRUPS LEGS	STIRRUPS SPACING	SKIN REINF.	TYPE	Fy (ksi)	d (IN)	bf (IN)	tf (IN)	tw (IN)	DEVELOPMENT LENGTH	STUDS ROWS	STUDS COLS.	ADD'L HORIZ. U-BARS @ T&B OF BEAM	T/C THREADED RODS	PROVIDE STIFF. PL. AT FACE OF WALL	ADD'L STIFF. PL. FROM FACE OF WALL	STEEL BEAM WEB OPENING TYPE	STEEL BEAM WEB OPENING WEB DOUBLER	
							-											-	-	-			-
LB08	44	18 X 40	4-#11	#5	2	6"	-	BUILT UP	65	34	8	1	1 3/8	5'-0"	2	7	3-#6	-	-	-	2	YES	-
LB08	36 - 43	18 X 27	2-#11	#4	2	10"	-	BUILT UP	65	21	8	1 1/4	7/8	4'-6"	2	7	4-#6	-	-	-	1	YES	-
LB08	35	24 X 40	4-#11	#5	2	10"	-	BUILT UP	65	34	8	1 1/4	1 3/4	6'-0"	2	13	8-#6	-	-	-	2	YES	-
LB08	31 - 34	24 X 27	2-#11	#4	2	10"	-	BUILT UP	65	21	10	1 1/2	1 1/8	4'-6"	2	10	6-#6	-	-	-	1	YES	-
LB08	30	24 X 27	2-#11	#4	2	10"	-	BUILT UP	65	21	10	1 1/4	7/8	4'-6"	2	7	3-#6	-	-	-	1	YES	-
LB08	29	24 X 27	2-#11	#4	2	10"	-	BUILT UP	65	21	10	1 1/4	3/4	4'-6"	2	6	3-#6	-	-	-	1	YES	-
LB08	28	24 X 51	4-#11	#4	2	12"	6-#4 E.F.	BUILT UP	65	45	10	1	3/4	5'-6"	2	8	3-#6	-	-	-			-
LB08	27	24 X 47	4-#11	#4	2	12"	6-#4 E.F.	BUILT UP	65	41	14	2	1 5/8	5'-0"	2	7	3-#6	-	-	-	3	YES	-
LB08	25 - 26	24 X 27	2-#11	#4	2	10"	-	BUILT UP	65	21	10	1 3/8	7/8	4'-6"	2	7	3-#6	-	-	-	1	YES	-
LB08	24	24 X 27	2-#11	#4	2	10"	-	BUILT UP	65	21	10	1 1/2	1 1/8	4'-6"	2	8	5-#6	-	-	-	1	YES	-
LB08	18 - 23	24 X 27	2-#11	#4	2	10"	-	BUILT UP	65	21	10	1 1/2	1 1/8	4'-6"	2	9	6-#6	-	-	-	1	YES	-
LB08	17	24 X 40	4-#11	#5	2	6"	-	BUILT UP	65	34	14	2	1 3/4	5'-0"	2	9	5-#6	-	-	-	2	YES	-
LB08	09 - 16	24 X 27	2-#11	#4	2	10"	-	BUILT UP	65	21	10	1 3/4	1 1/8	4'-6"	2	7	3-#6	-	-	-	1	YES	-
LB08	08	24 X 27	2-#11	#4	2	10"	-	BUILT UP	65	21	10	1 3/8	1 1/8	4'-6"	2	6	3-#6	-	-	-	1	YES	-
LB08	07	24 X 27	2-#11	#4	2	10"	-	BUILT UP	65	21	10	1 3/8	7/8	4'-6"	2	6	3-#6	-	-	-	1	YES	-
LB08	06	24 X 40	4-#11	#4	2	10"	-	BUILT UP	65	34	10	1 3/8	1 3/8	5'-6"	2	9	4-#6	-	-	-	2	YES	-
LB08	05	26 X 108	8-#11	#4	2	12"	51-#4 E.F.	BUILT UP	65	102	10	1 3/8	1 3/8	7'-0"	2	8	3-#6	-	-	-			-
LB08	04	26 X 96	9-#11	#5	2	5"	30-#4 E.F.	-	-	-	-	-	-	-	-	-	-	-	-	-			2 Layers
LB08	01	26 X 54	5-#11	#5	2	6"	6-#4 E.F.	-	-	-	-	-	-	-	-	-	-	-	-	-			-
LB09	T.O.ROOF	18 X 84	4-#9	#5	2	12"	19-#4 E.F.	-	-	-	-	-	-	-	-	-	-	-	-	-			2 Layers
LB09	EMR	18 X 58	4-#9	#4	2	12"	6-#4 E.F.	-	-	-	-	-	-	-	-	-	-	-	-	-			2 Layers
LB09	ROOF	18 X 84	6-#11	#5	2	8"	19-#4 E.F.	-	-	-	-	-	-	-	-	-	-	-	-	-			2 Layers
LB09	71	18 X 59	6-#11	#5	3	5"	7-#4 E.F.	-	-	-	-	-	-	-	-	-	-	-	-	-			2 Layers
LB09	70	18 X 32	6-#11	#6	2	6"	3-#4 E.F.	-	-	-	-	-	-	-	-	-	-	-	-	-			2 Layers
LB09	68 - 69	18 X 30	6-#11	#6	2	6"	3-#4 E.F.	-	-	-	-	-	-	-	-	-	-	-	-	-			2 Layers
LB09	67	18 X 30	6-#11	#6	2	5"	3-#4 E.F.	-	-	-	-	-	-	-	-	-	-	-	-	-			2 Layers
LB09	64 - 66	18 X 30	2-#11	#4	2	12"	-	BUILT UP	65	24	6	1 3/8	5/8	5'-0"	1	5	3-#6	-	-	-	1	NO	-
LB09	63	18 X 43	4-#11	#4	2	12"	6-#4 E.F.	BUILT UP	65	37	6	1 1/4	7/8	5'-0"	1	7	3-#6	-	-	-	2	YES	-
LB09	61 - 62	18 X 30	2-#11	#4	2	12"	-	BUILT UP	65	24	6	1 1/4	3/4	5'-0"	1	5	3-#6	-	-	-	1	YES	-
LB09	60	18 X 30	2-#11	#4	2	12"	-	BUILT UP	65	24	6	2	1	5'-0"	1	8	3-#6	-	-	-	1	YES	-
LB09	55 - 59	18 X 27	2-#11	#4	2	10"	-	BUILT UP	65	21	6	2	7/8	5'-0"	1	10	3-#6	-	-	-	1	YES	-
LB09	54	18 X 40	4-#11	#5	2	10"	-	BUILT UP	65	34	6	2	1 1/2	6'-6"	1	14	4-#6	-	-	-	2	YES	-
LB09	53	18 X 27	2-#11	#4	2	10"	-	BUILT UP	65	21	6	1 3/4	3/4	5'-0"	1	11	3-#6	-	-	-	1	YES	-
LB09	52	18 X 27	2-#11	#4	2	10"	-	BUILT UP	65	21	6	1 3/4	3/4	5'-0"	1	10	3-#6	-	-	-	1	YES	-
LB09	51	18 X 27	2-#11	#4	2	10"	-	BUILT UP	65	21	6	1 3/8	3/4	5'-0"	1	8	3-#6	-	-	-	1	YES	-
LB09	50	18 X 51	2-#11	#4	2	8"	6-#4 E.F.	BUILT UP	65	45	6	3/4	3/4	5'-0"	1	9	3-#6	-	-	-			-
LB09	49	18 X 47	2-#11	#5	2	10"	6-#4 E.F.	BUILT UP	65	41	6	1 5/8	3/4	5'-0"	1	10	3-#6	-	-	-	4	YES	-
LB09	48	18 X 27	2-#11	#4	2	10"	-	BUILT UP	65	21	6	1 5/8	3/4	4'-6"	1	7	3-#6	-	-	-	1	YES	-
LB09	46 - 47	18 X 27	2-#11	#4	2	10"	-	BUILT UP	65	21	6	1 5/8	3/4	4'-6"	1	7	3-#6	-	-	-	1	YES	-
LB09	45	18 X 27	2-#11	#4	2	10"	-	BUILT UP	65	21	6	1 5/8	7/8	4'-6"	1	7	3-#6	-	-	-	1	YES	-
LB09	44	18 X 40	4-#11	#5	2	6"	-	BUILT UP	65	34	6	2	1 1/2	6'-0"	1	10	3-#6	-	-	-	2	YES	-
LB09	43	18 X 27	2-#11	#4	2	10"	-	BUILT UP	65	21	6	1 5/8	7/8	4'-6"	1	8	3-#6	-	-	-	1	YES	-
LB09	36 - 42	18 X 27	2-#11	#4	2	10"	-	BUILT UP	65	21	6	2	1	4'-6"	1	8	3-#6	-	-	-	1	YES	-
LB09	35	24 X 40	4-#11	#6	2	6"	-	BUILT UP	65	34	6	2	1 5/8	6'-6"	1	10	3-#6	-	-	-	2	YES	-
LB09	31 - 34	24 X 27	2-#11	#4	2	10"	-	BUILT UP	65	21	6	2	1	4'-6"	1	8	3-#6	-	-	-	1	YES	-
LB09	30	24 X 27	2-#11	#4	2	10"	-	BUILT UP	65	21	6	2	1	4'-6"	1	7	3-#6	-	-	-	1	YES	-
LB09	29	24 X 27	2-#11	#4	2	10"	-	BUILT UP	65	21	6	1 5/8	7/8	4'-6"	1	7	3-#6	-	-	-	1	YES	-
LB09	28	24 X 51	4-#11	#6	2	6"	6-#4 E.F.	BUILT UP	65	45	6	1 1/4	7/8	6'-6"	1	12	3-#6	-	-	-			-
LB09	27	24 X 47	4-#11	#6	2	6"	6-#4 E.F.	BUILT UP	65	41	6	2	2	6'-0"	1	10	3-#6	-	-	-	3	YES	-
LB09	26	24 X 27	2-#11	#4	2	10"	-	BUILT UP	65	21	6	2	1	4'-6"	1	8	3-#6	-	-	-	1	YES	-
LB09	23 - 25	24 X 27	2-#11	#4	2	10"	-	BUILT UP	65	21	6	2	1 1/4	4'-6"	1	9	3-#6	-	-	-	1	YES	-
LB09	18 - 22	24 X 27	2-#11	#4	2	10"	-	BUILT UP	65	21	6	2	1 1/4	5'-0"	1	9	3-#6	-	-	-	1	YES	-
LB09	17	24 X 40	4-#11	#6	2	6"	-	BUILT UP	65	34	6	2	2	7'-0"	1	12	3-#6	-	-	-	2	YES	-
LB09	12 - 16	24 X 27	2-#11	#4	2	10"	-	BUILT UP	65	21	6	2	1 1/4	4'-6"	1	9	3-#6	-	-	-	1	YES	-
LB09	10 - 11	24 X 27	2-#11	#4	2	10"	-	BUILT UP	65	21	6	2	1	4'-6"	1	9	3-#6	-	-	-	1	YES	-
LB09	08 - 09	24 X 27	2-#11	#4	2	10"	-	BUILT UP	65	21	6	1 5/8	1	4'-6"	1	9	3-#6	-	-	-	1	YES	-
LB09	07	24 X 27	2-#11	#4	2	10"	-	BUILT UP	65	21	6	1 5/8	3/4	4'-6"	1	9	3-#6	-	-	-	1	YES	-
LB09	06	24 X 40	2-#11	#5	2	12"	-	BUILT UP	65	34	6	1	1 1/4	5'-0"	1	12	3-#6	-	-	-	2	YES	-
LB09	05	24 X 108	6-#11	#6	2	6"	51-#4 E.F.	BUILT UP	65	102	10	1 3/8	1 3/8	8'-6"	2	12	3-#6	-	-	-			-
LB09	04	24 X 96	6-#11	#5	2	6"	30-#4 E.F.	BUILT UP	65	90	10	1 3/8	1 1/4	8'-0"	2	11	3-#6	-	-	-			-
LB09	03	24 X 21	5-#11	#6	2	6"	-	-	-	-	-	-	-	-	-	-	-	-	-	-			-
LB09	02	24 X 26	6-#11	#6	2	5"	-	-	-	-	-	-	-	-	-	-	-	-	-	-			2 Layers
LB09	01	24 X 85	6-#11	#5	2	8"	26-#4 E.F.	BUILT UP	65	79	10	1 3/8	1	6'-0"	2	9	3-#6	-	-	-			-
LB10	ROOF	18 X 84	4-#11	#5	2	8"	19-#4 E.F.	-	-	-	-	-	-	-	-	-	-	-	-	-			2 Layers
LB10	71	18 X 59	4-#11	#5	2	6"	7-#4 E.F.	-	-	-	-	-	-	-	-	-	-	-	-	-			2 Layers
LB10	70	18 X 32	3-#11	#5	2	6"	3-#4 E.F.	-	-	-	-	-	-	-	-	-	-	-	-	-			-
LB10	69	18 X 30	3-#11	#5	2	5"	-	-	-	-	-	-	-	-	-	-	-	-	-	-			-
LB10	66 - 68	18 X 30	3-#11	#5	2	5"	3-#4 E.F.	-	-	-	-	-	-	-	-	-	-	-	-	-			-
LB10	64 - 65	18 X 30	3-#11	#6	2	6"	3-#4 E.F.	-	-	-	-	-	-	-	-	-	-	-	-	-			-
LB10	63	18 X 43	4-#11	#6	2	6"	6-#4 E.F.	-	-	-	-	-	-	-	-	-	-	-	-	-			2 Layers
LB10	61 - 62	18 X 30	4-#11	#6	2	5"	3-#4 E.F.	-	-	-	-	-	-	-	-	-	-	-	-	-			2 Layers
LB10	60	18 X 30	2-#11	#4	2	10"	-	BUILT UP	65	21	8	1	3/4	4'-6"	1	8	3-#6	-	-	-	1	YES	-
LB10	58 - 59	18 X 27	2-#11	#4	2	10"	-	BUILT UP	65	21	8	7/8	3/4	4'-6"	1	8	3-#6	-	-	-	1	YES	-
LB10	57	18 X 27	2-#11	#4	2	10"	-	BUILT UP	65	18	8	7/8	7/8	4'-6"	1	9	3-#6	-	-	-	1	YES	-
LB10	55 - 56	18 X 27	2-#11	#4	2	10"	-	BUILT UP	65	21	8	7/8	7/8	4'-6"	1	8	3-#6	-	-	-	1	YES	-
LB10	54	18 X 40	2-#11	#5	2	10"	-	BUILT UP	65	31	8	1	1 3/8	5'-0"	2	8	3-#6	-	-	-	2	YES	-
LB10	53	18 X 27	2-#11	#4	2	10"	-	BUILT UP	65	21	8	7/8	7/8	4'-6"	2	5	3-#6	-	-	-	1	YES	-
LB10	52	18 X 27	2-#11	#4	2	10"	-	BUILT UP	65	21	8	7/8	3/4	4'-6"	2	5	3-#6	-	-	-	1	YES	-
LB10	51	18 X 27	2-#11	#4	2	10"	-	BUILT UP	65	18	8	7/8	3/4	4'-6"	2	5	3-#6	-	-	-	1	YES	-
LB10	50	18 X 51	2-#11	#4	2	10"	6-#4 E.F.	BUILT UP	65	45	8	3/4	3/4	6'-0"	2	8	3-#6	-	-	-			-
LB10	49	18 X 47	2-#11	#5	2	10"	6-#4 E.F.	BUILT UP	65	41	8	3/4	1	6'-0"	2	8	3-#6	-	-	-	4	YES	-
LB10	48	18 X 27	2-#11	#4	2	10"	-	BUILT UP	65	18	8	1	1	4'-6"	2	7	3-#6	-	-	-	1	YES	-
LB10	47	18 X 27	2-#11	#4	2	10"	-	BUILT UP	65	21	8	1	1	4'-6"	2	7	3-#6	-	-	-	1	YES	-
LB10	46	18 X 27	2-#11	#4	2	10"	-	BUILT UP	65	21	8	1	1 1/4	4'-6"	2	7	3-#6	-	-	-	1	YES	-
LB10	45	18 X 27	2-#11	#4	2	10"	-	BUILT UP	65	18	8	1	1 1/4	4'-6"	2	7	4-#6	-	-	-	1	YES	-
LB10	44	18 X 40	2-#11	#5	2	8"	-	BUILT UP	65	34	8	1 1/2	1 1/2	5'-6"	2	9	4-#6	-	-	-	2	YES	-
LB10	43	18 X 27	2-#11	#4	2	10"	-	BUILT UP	65	21	8	1 1/4	1 1/4	4'-6"	2	6	3-#6	-	-	-	1	YES	-
LB10	42	18 X 27	2-#11	#4	2	10"	-	BUILT UP	65	18	8	1 1/4	1 1/4	4'-6"	2	7	4-#6	-	-	-	1	YES	-
LB10	41	18 X 27	2-#11	#4	2	10"	-	BUILT UP	65	21	8	1 1/4	1 1/4	4'-6"	2	7	3-#6	-	-	-	1	YES	-
LB10	40	18 X 27	2-#11	#4	2	10"	-	BUILT UP	65	21	8	1 3/4	1 1/4	4'-6"	2	7	3-#6	-	-	-	1	YES	-
LB10	39	18 X 27	2-#11	#4	2	10"	-	BUILT UP	65	18	8	1 3/4	1 1/4	4'-6"	2	8	4-#6	-	-	-	1	YES	-
LB10	37 - 38	18 X 27	2-#11	#4	2	10"	-	BUILT UP	65	21	8	1 1/4	1 1/4	4'-6"	2	7	3-#6	-	-	-	1	YES	-
LB10	36	18 X 27	2-#11	#4	2	10"	-	BUILT UP	65	18	8	1 1/4	1 1/4	4'-6"	2	8	4-#6	-	-	-	1	YES	-
LB10	35	24 X 40	2-#11	#5	2	10"	-	BUILT UP	65	34	12	2	1 3/4	5'-6"	2	11	6-#6	-	-	-	2	YES	-
LB10	34	24 X 27	2-#11	#4	2	10"	-	BUILT UP	65	21	10	1 3/4	1 1/4	4'-6"	2	6	3-#6	-	-	-	1	YES	-
LB10	33	24 X 27	2-#11	#4	2	10"	-	BUILT UP	65	18	10	1 3/4	1 1/4	4'-6"	2	6	3-#6	-	-	-	1	YES	-
LB10	32	24 X 27	2-#11	#4	2	10"	-	BUILT UP	65	21	10	1 3/4	1 1/4	4'-6"	2	6	3-#6	-	-	-	1	YES	-
LB10	31	24 X 27	2-#11	#4	2	10"	-	BUILT UP	65	21	10	1 3/8	1 1/2	4'-6"	2	6	3-#6	-	-	-	1	YES	-
LB10	30	24 X 27	2-#11	#4	2	10"	-	BUILT UP	65	18	10	1 3/8	7/8	4'-6"	2	6	3-#6	-	-	-	1	YES	-
LB10	29	24 X 27	2-#11	#4	2	10"	-	BUILT UP	65	21	10	1 3/8	7/8	4'-6"	2	6	3-#6	-	-	-	1	YES	-
LB10	28	24 X 51	4-#11	#4	2	10"	6-#4 E.F.	BUILT UP	65	42	10	1	3/4	6'-0"	2	10	4-#6	-	-	-			-
LB10	27	24 X 47	4-#11	#4	2	10"	6-#4 E.F.	BUILT UP	65	41	14	2	1 3/4	6'-0"	2	9	4-#6	-	-	-	3	YES	-
LB10	26	24 X 27	2-#11	#4	2	10"	-	BUILT UP	65	21	10	1 1/2	1 1/8	4'-6"	2	6	3-#6	-	-	-	1	YES	-
LB10	25	24 X 27	2-#11	#4	2	10"	-	BUILT UP	65	21	10	1 3/4	1 1/4	4'-6"	2	7	3-#6	-	-	-	1	YES	-
LB10	24	24 X 27	2-#11	#4	2	10"	-	BUILT UP	65	18	10	1 3/4	1 1/4	4'-6"	2	6	3-#6	-	-	-	1	YES	-
LB10	22 - 23	24 X 27	2-#11	#4	2	10"	-	BUILT UP	65	21	10	2	1 1/4	4'-6"	2	6	3-#6	-	-	-	1	YES	-
LB10	21	24 X 27	2-#11	#4	2	10"	-	BUILT UP	65	18	10	2	1 1/4	4'-6"	2	6	3-#6	-	-	-	1	YES	-
LB10	19 - 20	24 X 27	2-#11	#4	2	10"	-	BUILT UP	65	21	10	2	1 1/4	4'-6"	2	6	3-#6	-	-	-	1	YES	-
LB10	18	24 X 27	2-#11	#4	2	10"	-	BUILT UP	65	18	10	2	1 1/4	4'-6"	2	6	3-#6	-	-	-	1	YES	-
LB10	17	24 X 40	4-#11	#5	2	8"	-	BUILT UP	65	34	14	2	1 7/8	6'-0"	2	12	7-#6	-	-	-	2	YES	-
LB10	16	24 X 27	2-#11	#4	2	10"	-	BUILT UP	65	21	10	2	1 1/4	4'-6"	2	6	3-#6	-	-	-	1	YES	-
LB10	15	24 X 27	2-#11	#4	2	10"	-	BUILT UP	65	18	10	2	1 1/4	4'-6"	2	6	3-#6	-	-	-	1	YES	-
LB10	13 - 14	24 X 27	2-#11	#4	2	10"	-	BUILT UP	65	21	10	2	1 1/4	4'-6"	2	6	3-#6	-	-	-	1	YES	-
LB10	12	24 X 27	2-#11	#4	2	10"	-	BUILT UP	65	18	10	2	1 1/4	4'-6"	2	6	3-#6	-	-	-	1	YES	-
LB10	11	24 X 27	2-#11	#4	2	10"	-	BUILT UP	65	21	10	2	1 1/4	4'-6"	2	6	3-#6	-	-	-	1	YES	-
LB10	10	24 X 27	2-#11	#4	2	10"	-	BUILT UP	65	21	10	1 3/4	1 1/4	4'-6"	2	6	3-#6	-	-	-	1	YES	-
LB10	09	24 X 27	2-#11	#4	2	10"	-	BUILT UP	65	18	10	2	1 1/4	4'-6"	2	6	3-#6	-	-	-	1	YES	-
LB10	08	24 X 27	2-#11	#4	2	10"	-	BUILT UP	65	21	10	1 1/2	1	4'-6"	2	6	3-#6	-	-	-	1	YES	-
LB10	07	24 X 27	2-#11	#4	2	10"	-	BUILT UP	65	18	10	1 1/2	7/8	4'-6"	2	6	3-#6	-	-	-	1	YES	-
LB10	06	24 X 40	4-#11	#4	2	10"	-	BUILT UP	65	34	10	1 1/2	1 1/4	4'-6"	2	7	3-#6	-	-	-	2	YES	-
LB10	05	30 X 85	11-#11	#6	4	6"	26-#4 E.F.	-	-	-	-	-	-	-	-	-	-	-	-	-			2 Layers

NOTE
1. FOR NOTES SEE DWG. S-945.

KEY PLAN:

PROJECT NORTH | TRUE NORTH

DEVELOPER:
EXTELL DEVELOPMENT COMPANY
805 Third Ave, 7th Floor
New York, NY 10022
TEL: 212-712-6000 FAX: 212-712-6100

ARCHITECT OF RECORD:
AAI ARCHITECTS, P.C.
14 Wall Street, 2nd Floor
New York, NY 10005
TEL: 212-964-4040 FAX: 212-964-4090

INTERIOR DESIGNER:
MEYER DAVIS
180 Varick St, suite 404
New York, NY 10014
TEL: 212-627-5574

LANDSCAPE DESIGNER:
WEST 8 URBAN DESIGN & LANDSCAPE ARCHITECTURE P.C.
333 Hudson Street, Suite 905
New York, NY 10013
TEL: 212-285-0088 FAX: 212-285-0228

STRUCTURAL ENGINEERS:
WSP
228 East 45th Street
New York, NY 10017
TEL: 212-687-9888 FAX: 646-487-5501

MEP ENGINEERS:
ICOR ASSOCIATES, LLC
485 C Route 1 South, Suite 200
Iseline, NJ 08830
TEL: 908-272-3300 FAX: 908-272-4440

GEOTECHNICAL ENGINEERS:
LANGAN ENGINEERING & ENVIRONMENTAL SERVICES
21 Penn Plaza - 360 West 31st Street, 8th Floor
New York, NY 10001
TEL: 212.479.5400 FAX: 212.479.5444

No.	DESCRIPTION:	DATE:
1	CONCRETE BID PACKAGE	03-06-15
2	ADDENDUM #5	05-01-15
3	ISSUED FOR FILING	07-28-15

Discrepancies must be reported immediately to the Architect before proceeding. Only figured dimensions are to be used. Contractors must check all dimensions on site. This drawing is protected by copyright.

ALL DIMENSIONS ARE SHOWN IN IMPERIAL.

CONSULTANT: WSP

PROJECT:
250 SOUTH STREET
NEW YORK, NY

DRAWING TITLE:
LINK BEAM SCHEDULE 3

SEAL & SIGNATURE:

DATE: 07/25/14
PROJECT No: 1302510
DRAWN: CADD REV:
CHK: CL
SCALE: N.T.S.
DWG No: **S-947.00**
DOB PAGE No: of

DOB EMPLOYEE STAMP: Damian Titus — APPROVED Under Directive 2 of 1975 — AMENDED APPLICATION — Date: 10/08/2015 — NYC Development Hub

DOB B-SCAN:

MARK	FLOOR	CONCRETE BEAM SIZE b x h (IN)	TOP & BOTTOM REINF.	STIRRUPS SIZE	STIRRUPS LEGS	STIRRUPS SPACING	SKIN REINF.	STEEL SECTION TYPE	Fy (ksi)	d (IN)	bf (IN)	tf (IN)	tw (IN)	DEVELOPMENT LENGTH	STUDS ROWS	STUDS COLS.	ADD'L HORIZ. U-BARS @ T&B OF BEAM	T/C THREADED RODS	PROVIDE STIFF. PL. AT FACE OF WALL	ADD'L STIFF. PL. FROM FACE OF WALL	STEEL BEAM WEB OPENING TYPE	WEB DOUBLER	REMARKS
LB10	04	30 X 49	7-#11	#6	2	6"	6-#4 E.F.	-	-	-	-	-	-	-	-	-	-	-	-	-			2 Layers
LB10	01	30 X 43	10-#11	#5	2	8"	6-#4 E.F.	-	-	-	-	-	-	-	-	-	-	-	-	-			2 Layers
LB11	50	16 X 51	4-#11	#6	2	5"	6-#4 E.F.	BUILT UP	65	45	6	1 1/2	7/8	7'-0"	1	14	3-#6	-	-	-			-
LB11	49	16 X 47	2-#11	#4	2	10"	6-#4 E.F.	BUILT UP	65	41	6	1	3/4	7'-6"	1	17	5-#6	-	-	-			-
LB11	48	16 X 27	2-#11	#4	2	10"	-	BUILT UP	65	21	6	2	3/4	5'-0"	1	8	3-#6	-	-	-			-
LB11	45 - 47	16 X 27	2-#11	#4	2	10"	-	BUILT UP	65	21	6	2	3/4	5'-0"	1	9	3-#6	-	-	-			-
LB11	44	16 X 40	4-#11	#6	2	5"	-	BUILT UP	65	34	6	2	1	6'-6"	1	12	3-#6	-	-	-			-
LB11	42 - 43	16 X 27	2-#11	#4	2	10"	-	BUILT UP	65	21	6	2	1 1/4	5'-6"	1	11	3-#6	-	-	-			-
LB11	37 - 41	16 X 27	2-#11	#4	2	10"	-	BUILT UP	65	21	6	2	1 1/4	5'-6"	1	12	3-#6	-	-	-			-
LB11	36	16 X 27	2-#11	#4	2	10"	-	BUILT UP	65	21	6	2	1 1/4	5'-6"	1	11	3-#6	-	-	-			-
LB11	35	16 X 40	4-#11	#6	2	5"	-	BUILT UP	65	34	6	2	1	7'-0"	1	11	3-#6	-	-	-			-
LB11	31 - 34	16 X 27	2-#11	#4	2	10"	5-#4 E.F.	BUILT UP	65	21	6	2	1 1/4	5'-6"	1	11	3-#6	-	-	-			-
LB11	30	16 X 27	2-#11	#4	2	10"	-	BUILT UP	65	21	6	2	3/4	5'-0"	1	9	3-#6	-	-	-			-
LB11	29	16 X 27	2-#11	#4	2	10"	-	BUILT UP	65	21	6	1 3/8	5/8	5'-0"	1	7	3-#6	-	-	-			-
LB11	28	16 X 51	2-#11	#4	2	10"	6-#4 E.F.	BUILT UP	65	45	6	1	3/4	5'-6"	1	12	3-#6	-	-	-			-
LB11	27	16 X 47	2-#11	#4	2	10"	6-#4 E.F.	BUILT UP	65	41	6	1	5/8	5'-6"	1	13	4-#6	-	-	-			-
LB11	26	16 X 27	2-#11	#4	2	10"	-	BUILT UP	65	21	6	2	3/4	5'-0"	1	9	3-#6	-	-	-			-
LB11	24 - 25	16 X 27	2-#11	#4	2	10"	-	BUILT UP	65	21	6	2	1 1/4	5'-0"	1	11	3-#6	-	-	-			-
LB11	18 - 23	16 X 27	2-#11	#4	2	8"	-	BUILT UP	65	21	6	2	1 1/4	5'-0"	1	11	3-#6	-	-	-			-
LB11	17	16 X 40	4-#11	#6	2	5"	-	BUILT UP	65	34	6	1 7/8	1	6'-6"	1	12	3-#6	-	-	-			-
LB11	09 - 16	16 X 27	2-#11	#4	2	10"	-	BUILT UP	65	21	6	2	1 1/4	5'-0"	1	13	4-#6	-	-	-			-
LB11	08	16 X 27	2-#11	#4	2	10"	-	BUILT UP	65	21	6	2	3/4	5'-0"	1	10	3-#6	-	-	-			-
LB11	07	16 X 27	2-#11	#4	2	10"	-	BUILT UP	65	21	6	1 3/4	3/4	5'-0"	1	10	3-#6	-	-	-			-
LB11	06	16 X 40	2-#11	#5	2	8"	-	BUILT UP	65	34	6	1	3/4	5'-0"	1	11	3-#6	-	-	-			-
LB11	05	24 X 108	6-#11	#5	2	6"	51-#4 E.F.	BUILT UP	65	102	10	1 1/2	1 3/8	6'-6"	2	7	3-#6	-	-	-			-
LB11	04	24 X 96	6-#11	#5	2	5"	30-#4 E.F.	BUILT UP	65	90	10	1 1/2	1 1/4	7'-0"	2	7	3-#6	-	-	-			-
LB11	03	24 X 21	5-#11	#6	2	6"	-	-	-	-	-	-	-	-	-	-	-	-	-	-			-
LB11	02	24 X 26	5-#11	#6	2	6"	-	-	-	-	-	-	-	-	-	-	-	-	-	-			-
LB11	01	24 X 85	8-#11	#6	2	4"	26-#4 E.F.	-	-	-	-	-	-	-	-	-	-	-	-	-			2 Layers
LB12	50	16 X 51	7-#11	#6	2	5"	6-#4 E.F.	-	-	-	-	-	-	-	-	-	-	-	-	-			3 Layers
LB12	49	16 X 47	4-#11	#6	2	6"	6-#4 E.F.	BUILT UP	65	41	6	1	3/4	6'-0"	1	12	3-#6	-	-	-			-
LB12	46 - 48	16 X 27	2-#11	#4	2	8"	-	BUILT UP	65	21	6	2	1 3/4	6'-0"	1	13	4-#6	-	-	-			-
LB12	45	16 X 27	2-#11	#4	2	8"	-	BUILT UP	65	21	6	2	1 3/4	6'-0"	1	13	4-#6	-	-	-			-
LB12	44	16 X 40	4-#11	#6	2	5"	-	BUILT UP	65	34	6	2	1 1/4	7'-6"	1	13	3-#6	-	-	-			-
LB12	39 - 43	16 X 27	2-#11	#4	2	8"	-	BUILT UP	65	21	6	2	1 1/4	5'-6"	1	12	3-#6	-	-	-			-
LB12	37 - 38	16 X 27	2-#11	#4	2	8"	-	BUILT UP	65	21	6	2	1 1/4	5'-6"	1	11	3-#6	-	-	-			-
LB12	36	16 X 27	2-#11	#4	2	8"	-	BUILT UP	65	21	6	2	1 1/4	5'-6"	1	10	3-#6	-	-	-			-
LB12	35	16 X 40	4-#11	#6	2	8"	-	BUILT UP	65	34	6	2	1	7'-0"	1	14	3-#6	-	-	-			-
LB12	31 - 34	16 X 27	2-#11	#4	2	10"	5-#4 E.F.	BUILT UP	65	21	6	2	1 1/4	5'-0"	1	11	3-#6	-	-	-			-
LB12	30	16 X 27	2-#11	#4	2	10"	-	BUILT UP	65	21	6	2	3/4	5'-0"	1	9	3-#6	-	-	-			-
LB12	29	16 X 27	2-#11	#4	2	10"	-	BUILT UP	65	21	6	1 3/8	5/8	5'-0"	1	8	3-#6	-	-	-			-
LB12	28	16 X 51	2-#11	#4	2	10"	6-#4 E.F.	BUILT UP	65	45	6	1	3/4	5'-0"	1	8	3-#6	-	-	-			-
LB12	27	16 X 47	2-#11	#4	2	10"	6-#4 E.F.	BUILT UP	65	41	6	1	5/8	5'-0"	1	9	3-#6	-	-	-			-
LB12	26	16 X 27	2-#11	#4	2	10"	-	BUILT UP	65	21	6	2	3/4	5'-0"	1	9	3-#6	-	-	-			-
LB12	25	16 X 27	2-#11	#4	2	10"	-	BUILT UP	65	21	6	2	1 1/4	5'-0"	1	9	3-#6	-	-	-			-
LB12	19 - 24	16 X 27	2-#11	#4	2	10"	-	BUILT UP	65	21	6	2	1 1/4	5'-0"	1	10	3-#6	-	-	-			-
LB12	18	16 X 27	2-#11	#4	2	10"	-	BUILT UP	65	21	6	2	1 1/4	5'-0"	1	10	3-#6	-	-	-			-
LB12	17	16 X 40	4-#11	#6	2	5"	-	BUILT UP	65	34	6	1 7/8	1	6'-0"	1	11	3-#6	-	-	-			-
LB12	11 - 16	16 X 27	2-#11	#4	2	10"	-	BUILT UP	65	21	6	2	1 1/4	5'-0"	1	10	3-#6	-	-	-			-
LB12	10	16 X 27	2-#11	#4	2	10"	-	BUILT UP	65	21	6	2	1 1/4	5'-0"	1	10	3-#6	-	-	-			-
LB12	09	16 X 27	2-#11	#4	2	10"	-	BUILT UP	65	21	6	2	1 1/4	4'-6"	1	10	3-#6	-	-	-			-
LB12	08	16 X 27	2-#11	#4	2	10"	-	BUILT UP	65	21	6	2	3/4	4'-6"	1	9	3-#6	-	-	-			-
LB12	07	16 X 27	2-#11	#4	2	10"	-	BUILT UP	65	21	6	1 7/8	3/4	4'-6"	1	9	3-#6	-	-	-			-
LB12	06	16 X 40	2-#11	#4	2	10"	-	BUILT UP	65	34	6	1	3/4	4'-6"	1	8	3-#6	-	-	-			-
LB12	01	24 X 85	8-#11	#6	2	4"	26-#4 E.F.	-	-	-	-	-	-	-	-	-	-	-	-	-			2 Layers
LB13	ROOF	18 X 84	4-#9	#4	2	8"	19-#4 E.F.	-	-	-	-	-	-	-	-	-	-	-	-	-			-
LB13	71	18 X 59	4-#9	#5	2	10"	7-#4 E.F.	-	-	-	-	-	-	-	-	-	-	-	-	-			-
LB13	70	18 X 32	4-#9	#4	2	12"	-	-	-	-	-	-	-	-	-	-	-	-	-	-			-
LB13	66 - 69	18 X 30	4-#9	#4	2	12"	-	-	-	-	-	-	-	-	-	-	-	-	-	-			-
LB13	65	18 X 30	4-#9	#4	2	8"	-	-	-	-	-	-	-	-	-	-	-	-	-	-			-
LB13	64	18 X 30	3-#9	#5	2	12"	-	-	-	-	-	-	-	-	-	-	-	-	-	-			-
LB13	63	18 X 43	3-#10	#5	2	8"	6-#4 E.F.	-	-	-	-	-	-	-	-	-	-	-	-	-			-
LB13	62	18 X 30	4-#10	#5	2	8"	-	-	-	-	-	-	-	-	-	-	-	-	-	-			2 Layers
LB13	61	18 X 30	2-#11	#5	2	8"	-	-	-	-	-	-	-	-	-	-	-	-	-	-			-
LB13	60	18 X 30	4-#11	#6	2	6"	3-#4 E.F.	-	-	-	-	-	-	-	-	-	-	-	-	-			2 Layers
LB13	55 - 59	18 X 27	3-#11	#6	2	5"	-	-	-	-	-	-	-	-	-	-	-	-	-	-			-
LB13	54	18 X 40	2-#11	#4	2	10"	-	BUILT UP	65	34	8	5/8	3/4	4'-6"	1	6	3-#6	-	-	-	2	YES	-
LB13	53	18 X 27	3-#11	#6	2	5"	-	-	-	-	-	-	-	-	-	-	-	-	-	-			-
LB13	52	18 X 27	3-#11	#5	2	5"	-	-	-	-	-	-	-	-	-	-	-	-	-	-			-
LB13	51	18 X 27	4-#11	#5	2	5"	-	-	-	-	-	-	-	-	-	-	-	-	-	-			2 Layers
LB13	50	18 X 51	2-#11	#4	2	12"	6-#4 E.F.	BUILT UP	65	45	8	3/4	5/8	5'-0"	1	8	3-#6	-	-	-			-
LB13	49	18 X 47	2-#11	#4	2	12"	6-#4 E.F.	BUILT UP	65	41	8	3/4	7/8	5'-6"	1	13	3-#6	-	-	-	4	YES	-
LB13	45 - 48	18 X 27	2-#11	#4	2	10"	-	BUILT UP	65	21	8	7/8	3/4	4'-6"	1	6	3-#6	-	-	-	1	YES	-
LB13	44	18 X 40	2-#11	#4	2	8"	-	BUILT UP	65	34	8	7/8	1 1/4	5'-6"	1	15	4-#6	-	-	-	2	YES	-
LB13	41 - 43	18 X 27	2-#11	#4	2	10"	-	BUILT UP	65	21	8	7/8	3/4	5'-0"	1	9	3-#6	-	-	-	1	YES	-
LB13	37 - 40	18 X 27	2-#11	#4	2	10"	-	BUILT UP	65	21	8	5/8	3/4	5'-0"	1	6	3-#6	-	-	-	2	YES	-
LB13	36	18 X 27	2-#11	#4	2	10"	-	BUILT UP	65	21	8	3/4	3/4	5'-0"	1	6	3-#6	-	-	-	1	NO	-
LB13	35	24 X 40	2-#11	#5	2	10"	-	BUILT UP	65	34	8	7/8	1 1/4	5'-0"	2	7	3-#6	-	-	-	2	YES	-
LB13	34	24 X 27	6-#11	#6	4	5"	5-#4 E.F.	-	-	-	-	-	-	-	-	-	-	-	-	-			2 Layers
LB13	31 - 33	24 X 27	5-#11	#5	4	5"	5-#4 E.F.	-	-	-	-	-	-	-	-	-	-	-	-	-			-
LB13	30	24 X 27	6-#11	#5	4	5"	5-#4 E.F.	-	-	-	-	-	-	-	-	-	-	-	-	-			2 Layers
LB13	29	24 X 27	5-#11	#5	4	5"	4-#4 E.F.	-	-	-	-	-	-	-	-	-	-	-	-	-			-
LB13	28	24 X 51	5-#11	#4	4	5"	6-#4 E.F.	-	-	-	-	-	-	-	-	-	-	-	-	-			-
LB13	27	24 X 47	5-#11	#5	4	6"	6-#4 E.F.	-	-	-	-	-	-	-	-	-	-	-	-	-			-
LB13	25 - 26	24 X 27	6-#11	#6	4	5"	5-#4 E.F.	-	-	-	-	-	-	-	-	-	-	-	-	-			2 Layers
LB13	24	24 X 27	2-#11	#4	2	10"	-	BUILT UP	65	21	8	1 1/8	7/8	5'-0"	2	5	3-#6	-	-	-	1	YES	-
LB13	18 - 23	24 X 27	2-#11	#4	2	10"	-	BUILT UP	65	21	8	1 1/8	7/8	5'-0"	2	6	3-#6	-	-	-	1	YES	-
LB13	17	26 X 40	4-#11	#4	2	10"	-	BUILT UP	65	34	8	1 1/8	1 5/8	6'-0"	2	12	6-#6	-	-	-	2	YES	-
LB13	14 - 16	26 X 27	2-#11	#4	2	10"	-	BUILT UP	65	21	8	1 1/8	1 1/8	4'-6"	2	8	4-#6	-	-	-	1	YES	-
LB13	09 - 13	26 X 27	2-#11	#4	2	10"	-	BUILT UP	65	21	8	1 1/8	1 1/8	4'-6"	2	8	4-#6	-	-	-	1	YES	-
LB13	08	26 X 27	2-#11	#4	2	10"	-	BUILT UP	65	21	8	1 1/8	1 1/8	4'-6"	2	8	4-#6	-	-	-	1	YES	-
LB13	07	26 X 27	2-#11	#4	2	10"	-	BUILT UP	65	21	8	1 1/8	7/8	4'-6"	2	6	3-#6	-	-	-	1	YES	-
LB13	06	26 X 40	4-#11	#5	2	10"	-	BUILT UP	65	34	8	1 1/8	1 5/8	5'-6"	2	9	3-#6	-	-	-	2	YES	-
LB13	05	30 X 117	10-#11	#6	2	6"	56-#4 E.F.	BUILT UP	65	105	10	1 3/4	1 1/2	8'-0"	2	11	3-#6	-	-	-			-
LB13	04	30 X 71	8-#11	#5	4	6"	13-#4 E.F.	-	-	-	-	-	-	-	-	-	-	-	-	-			2 Layers
LB13	03	30 X 25	6-#9	#4	4	10"	-	-	-	-	-	-	-	-	-	-	-	-	-	-			-
LB14	ROOF	12 X 84	2-#9	#5	2	10"	26-#4 E.F.	-	-	-	-	-	-	-	-	-	-	-	-	-			-
LB14	71	12 X 59	3-#9	#5	2	10"	7-#4 E.F.	-	-	-	-	-	-	-	-	-	-	-	-	-			2 Layers
LB14	70	12 X 32	2-#9	#5	2	10"	-	-	-	-	-	-	-	-	-	-	-	-	-	-			-
LB14	64 - 69	12 X 30	2-#9	#5	2	10"	-	-	-	-	-	-	-	-	-	-	-	-	-	-			-
LB14	63	12 X 43	2-#9	#5	2	10"	6-#4 E.F.	-	-	-	-	-	-	-	-	-	-	-	-	-			-
LB14	61 - 62	12 X 30	2-#11	#6	2	6"	-	-	-	-	-	-	-	-	-	-	-	-	-	-			-
LB14	60	18 X 30	3-#10	#6	2	6"	-	-	-	-	-	-	-	-	-	-	-	-	-	-			-
LB14	55 - 59	18 X 27	3-#11	#6	2	6"	-	-	-	-	-	-	-	-	-	-	-	-	-	-			-
LB14	54	18 X 40	3-#11	#6	2	6"	5-#4 E.F.	-	-	-	-	-	-	-	-	-	-	-	-	-			-
LB14	52 - 53	18 X 27	3-#11	#6	2	4"	-	-	-	-	-	-	-	-	-	-	-	-	-	-			-
LB14	51	18 X 27	3-#11	#6	2	5"	-	-	-	-	-	-	-	-	-	-	-	-	-	-			-
LB14	50	18 X 51	4-#11	#6	2	4"	5-#4 E.F.	-	-	-	-	-	-	-	-	-	-	-	-	-			2 Layers
LB14	49	18 X 47	2-#11	#4	2	12"	6-#4 E.F.	BUILT UP	65	41	8	3/4	7/8	4'-6"	1	6	3-#6	-	-	-			-
LB14	45 - 48	18 X 27	2-#11	#4	2	10"	-	BUILT UP	65	21	8	7/8	3/4	4'-6"	1	6	3-#6	-	-	-			-
LB14	44	18 X 40	2-#11	#4	2	12"	5-#4 E.F.	BUILT UP	65	34	8	3/4	1 1/4	5'-0"	1	6	3-#6	-	-	-			-
LB14	41 - 43	18 X 27	2-#11	#4	2	10"	-	BUILT UP	65	21	8	7/8	3/4	4'-6"	1	6	3-#6	-	-	-			-
LB14	38 - 40	18 X 27	2-#11	#4	2	10"	-	BUILT UP	65	21	8	5/8	3/4	4'-6"	1	6	3-#6	-	-	-			-
LB14	37	18 X 27	4-#11	#6	2	4"	-	-	-	-	-	-	-	-	-	-	-	-	-	-			2 Layers
LB14	36	18 X 27	4-#11	#6	2	5"	-	-	-	-	-	-	-	-	-	-	-	-	-	-			2 Layers
LB14	35	24 X 40	5-#11	#6	2	4"	5-#4 E.F.	-	-	-	-	-	-	-	-	-	-	-	-	-			-
LB14	31 - 34	24 X 27	4-#11	#6	2	4"	-	-	-	-	-	-	-	-	-	-	-	-	-	-			-
LB14	30	24 X 27	4-#11	#6	2	5"	-	-	-	-	-	-	-	-	-	-	-	-	-	-			-
LB14	29	24 X 27	3-#11	#5	2	5"	-	-	-	-	-	-	-	-	-	-	-	-	-	-			-

NOTE
1. FOR NOTES SEE DWG. S-945.

121185528 Job Number
ES216580889 Scan Code

KEY PLAN:

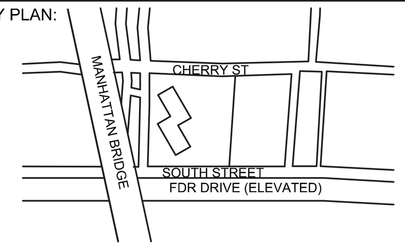

PROJECT NORTH

TRUE NORTH

DEVELOPER:
EXTELL DEVELOPMENT COMPANY
805 Third Ave, 7th Floor
New York, NY 10022
TEL: 212-712-6000 FAX: 212-712-6100

ARCHITECT OF RECORD:
AAI ARCHITECTS, P.C.
14 Wall Street, 2nd Floor
New York, NY 10005
TEL: 212-964-4040 FAX: 212-964-4090

INTERIOR DESIGNER:
MEYER DAVIS
180 Varick St, suite 404
New York, NY 10014
TEL: 212-627-5574

LANDSCAPE DESIGNER:
WEST 8 URBAN DESIGN & LANDSCAPE ARCHITECTURE P.C.
333 Hudson Street, Suite 905
New York, NY 10013
TEL: 212-285-0088 FAX: 212-285-0228

STRUCTURAL ENGINEERS:
WSP
228 East 45th Street
New York, NY 10017
TEL: 212-687-9888 FAX: 646-487-5501

MEP ENGINEERS:
ICOR ASSOCIATES, LLC
485 C Route 1 South, Suite 200
Iseline, NJ 08830
TEL: 908-272-3300 FAX: 908-272-4440

GEOTECHNICAL ENGINEERS:
LANGAN ENGINEERING & ENVIRONMENTAL SERVICES
21 Penn Plaza - 360 West 31st Street, 8th Floor
New York, NY 10001
TEL: 212.479.5400 FAX: 212.479.5444

No.	DESCRIPTION:	DATE:
1	CONCRETE BID PACKAGE	03-06-15
2	ADDENDUM #5	05-01-15
3	ISSUED FOR FILING	07-28-15

Discrepancies must be reported immediately to the Architect before proceeding. Only figured dimensions are to be used. Contractors must check all dimensions on site. This drawing is protected by copyright.

ALL DIMENSIONS ARE SHOWN IN IMPERIAL.

CONSULTANT:
WSP

PROJECT:
250 SOUTH STREET
NEW YORK, NY

DRAWING TITLE:
LINK BEAM SCHEDULE 4

SEAL & SIGNATURE:
STATE OF NEW YORK
AHMAD RAHIMIAN
No. 065537
LICENSED PROFESSIONAL ENGINEER

DATE:	07/25/14	
PROJECT No:	1302510	
DRAWN:	CADD	REV:
CHK:	CL	
SCALE:	N.T.S.	
DWG No:	S-948.00	
DOB PAGE No:	of	

DOB EMPLOYEE STAMP:
Damian Titus
Buildings
APPROVED
Under Directive 2 of 1975
AMENDED APPLICATION
Date: 10/08/2015
NYC Development Hub

DOB B-SCAN:

30" x 42" Arch E1 -SHEET SIZE
FILE NAME:
PLOT DATE:

DEPT OF BLDGS 121185528 Job Number
ES577110763 Scan Code

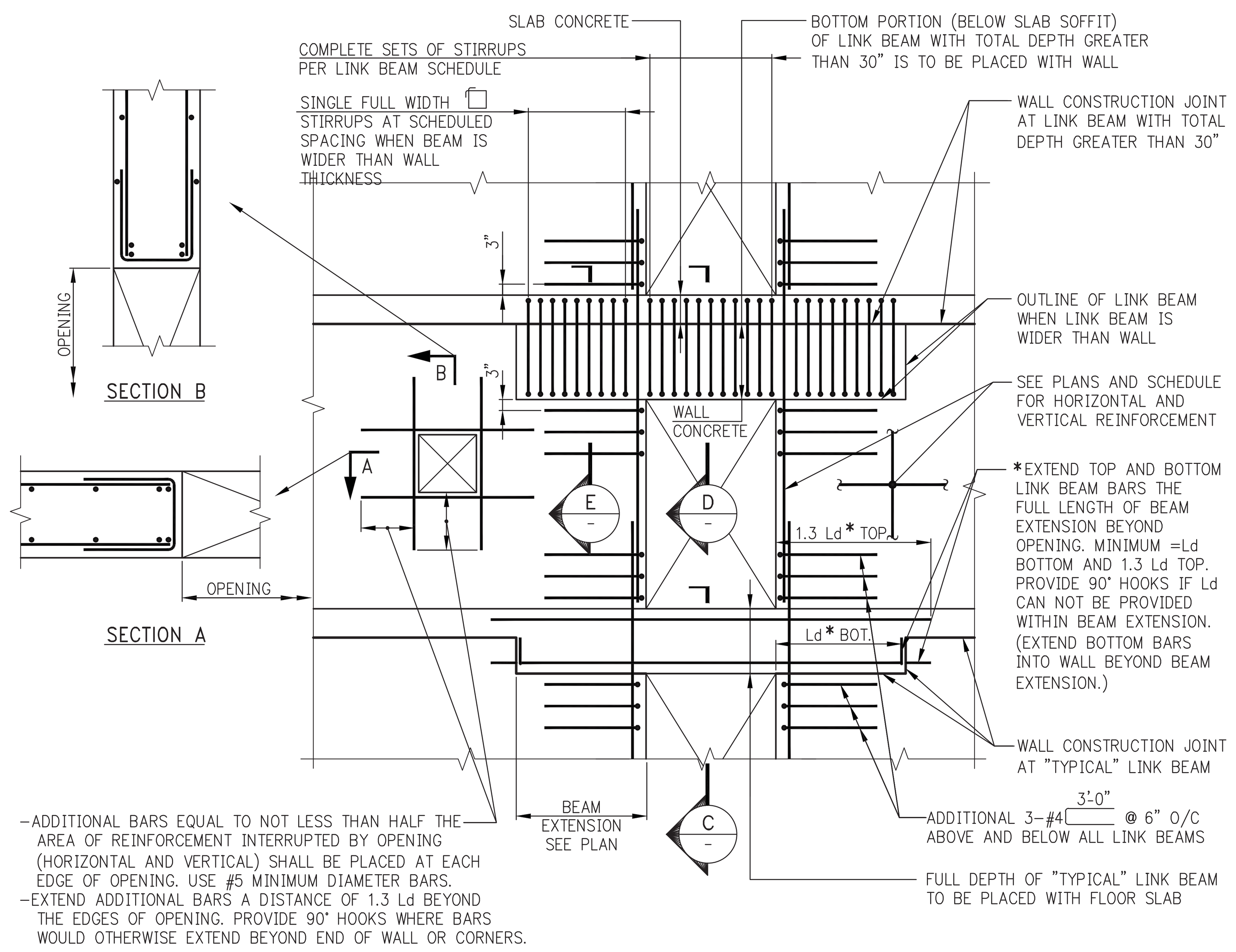

TYPICAL REINFORCEMENT AT LINK BEAMS AND AROUND SHEARWALL OPENINGS

SHEARWALL NOTES:

1. ALL SHEARWALL REINFORCEMENT (HORIZONTAL AND VERTICAL) IS TO BE TENSION LAP SPLICED. SEE LAP SPLICE IN S-960 SERIES DRAWINGS.
2. ALL NON-TYPICAL VERTICAL BARS UNSUPPORTED BY A LATERAL TIE SHALL BE SPACED NO MORE THAN 6" CLEAR ON BOTH SIDES FROM SUCH LATERALLY SUPPORTED BARS.
3. ALTERNATE 90° AND 135° ENDS ON CONSECUTIVE SINGLE LEG CROSSTIES THROUGHOUT HEIGHT OF WALL.
4. FOR MINIMUM TYPICAL REINFORCEMENT SEE SCHEDULE ON THIS DRAWING.
5. WHERE HEAVIER REINFORCEMENT IS SHOWN ON S-940 SERIES ELEVATIONS OR DETAILS, THE HEAVIER REINFORCEMENT SHALL BE USED IN LIEU OF REINFORCEMENT SHOWN ON SHEARWALL PLANS, UNLESS NOTED AS "ADDITIONAL". (AN ASTERISK (*) MAY BE SHOWN TO DENOTE SUCH SUBSTITUTIONS).
6. NO OPENING OTHER THAN THOSE SHOWN ON STRUCTURAL DRAWINGS MAY BE PLACED WITHOUT APPROVAL OF THE ENGINEER OF RECORD.
7. CONTRACTOR SHALL SUBMIT CONSOLIDATED SHOP DRAWINGS FOR ALL OPENINGS PROPOSED (SUCH AS STRUCTURAL, ARCHITECTURAL, MEP) TO THE ENGINEER OF RECORD FOR REVIEW AND APPROVAL.
8. NO VERTICAL CONSTRUCTION JOINTS ARE PERMITTED IN SHEARWALLS WITHOUT WRITTEN AUTHORIZATION FROM THE ENGINEER OF RECORD. KEYS AND DOWELS MUST BE AS DEFINED BY THE E.O.R.
9. SEE PLANS AND ELEVATIONS FOR SHEARWALL LOCATIONS, DIMENSIONS, REINFORCEMENT, OPENINGS, LINK BEAM LOCATIONS, ETC.
10. FOR LINK BEAM SIZES AND REINFORCEMENT SEE LINK BEAM SCHEDULE IN S-940 SERIES DRAWINGS.
11. SEE COLUMN SCHEDULES ON S-950 SERIES DRAWINGS FOR CONCRETE STRENGTH REQUIRED AT EACH LEVEL.
12. FOR MINIMUM REQUIRED MODULUS OF ELASTICITY OF CONCRETE, SEE SCHEDULE ON THIS DRAWING.

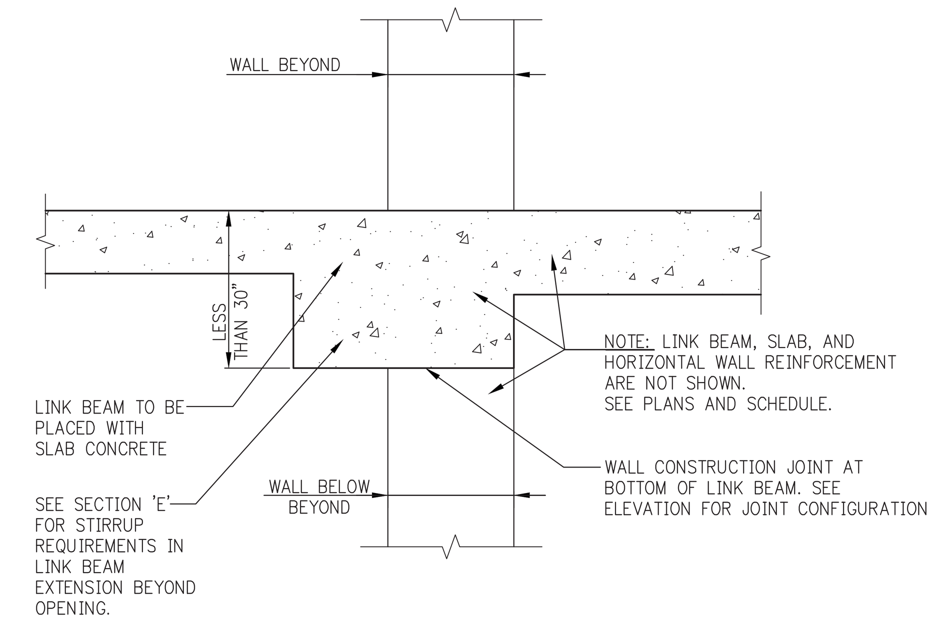

C S-949 SECTION THROUGH LINK BEAM PLACED WITH SLAB

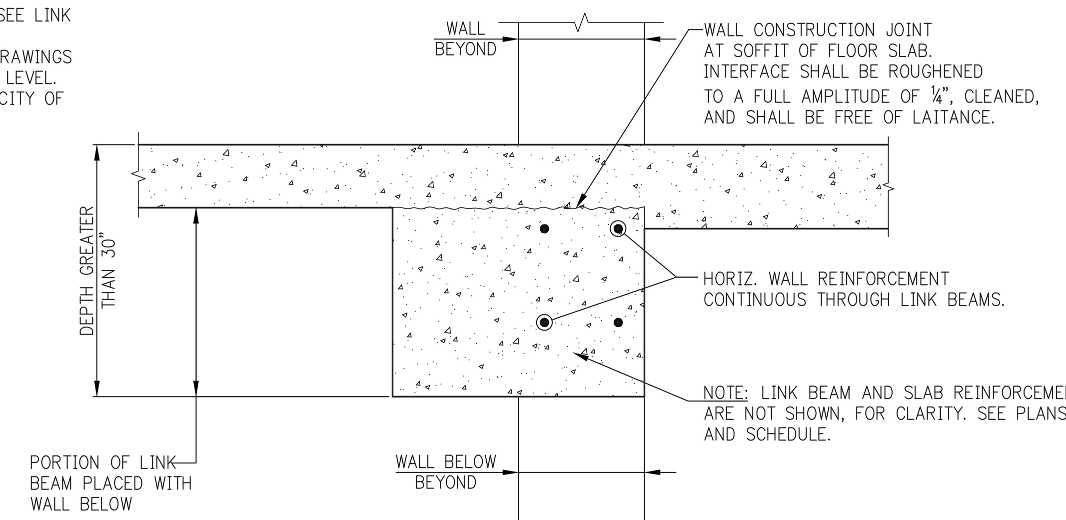

D S-949 SECTION THROUGH LINK BEAM WITH DEPTH >30" PLACED PARTIALLY WITH WALL

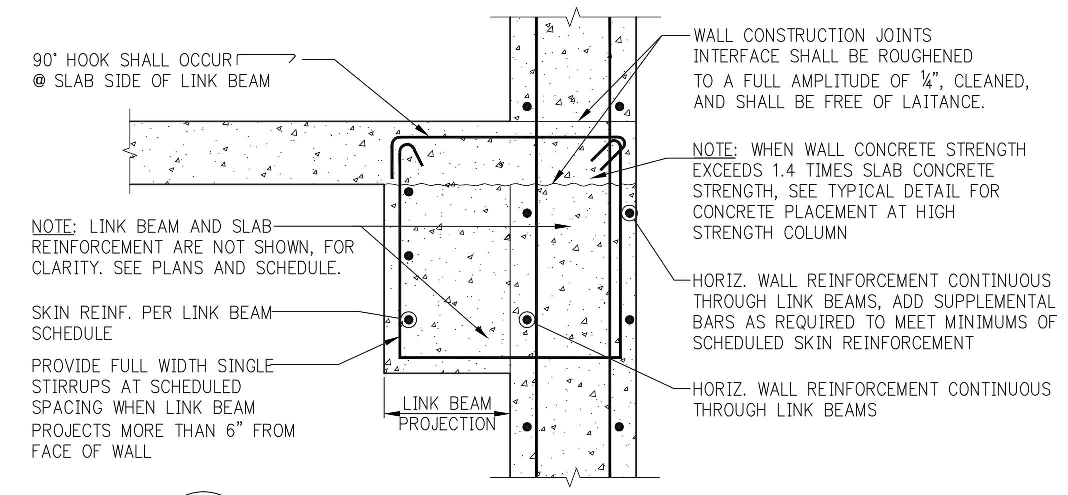

E S-949 SECTION THROUGH WALL AT LINK BEAM EXTENSION BEYOND OPENING

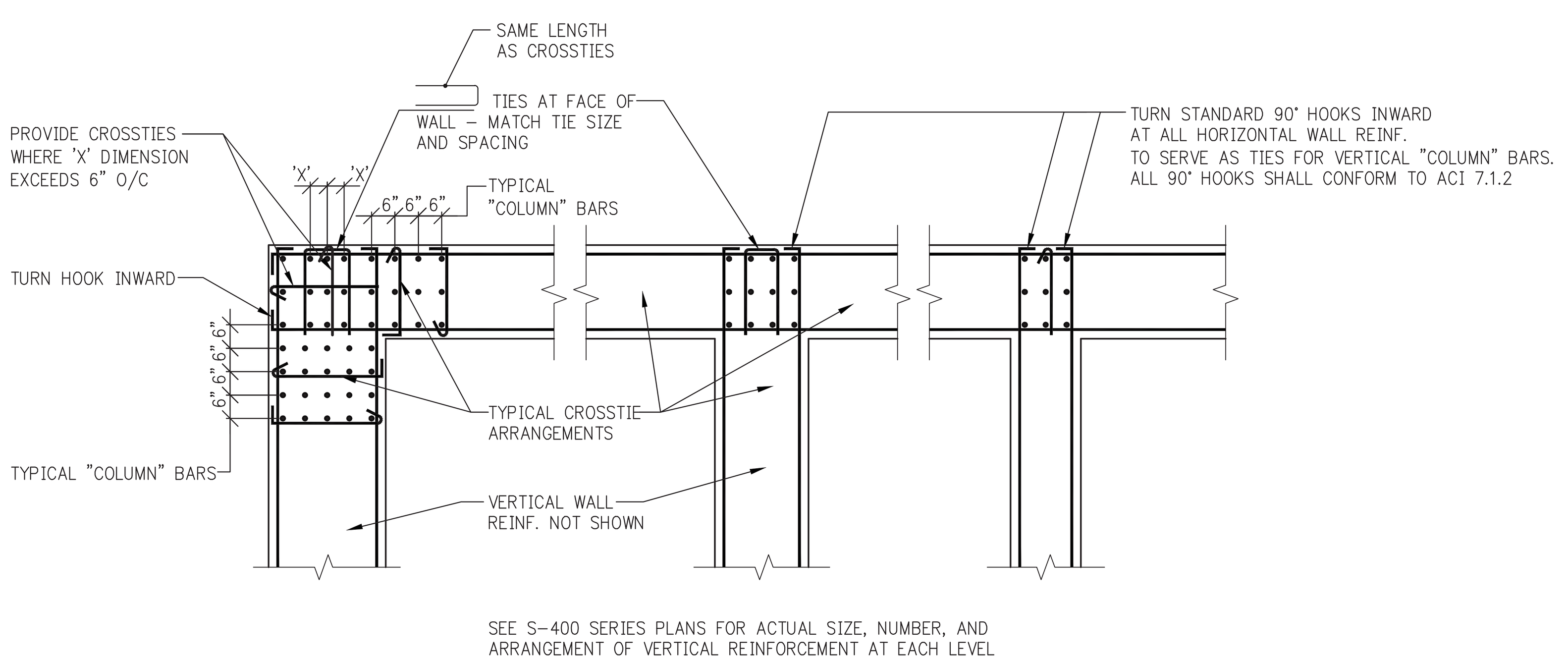

CORNER 'T' INTERSECTIONS

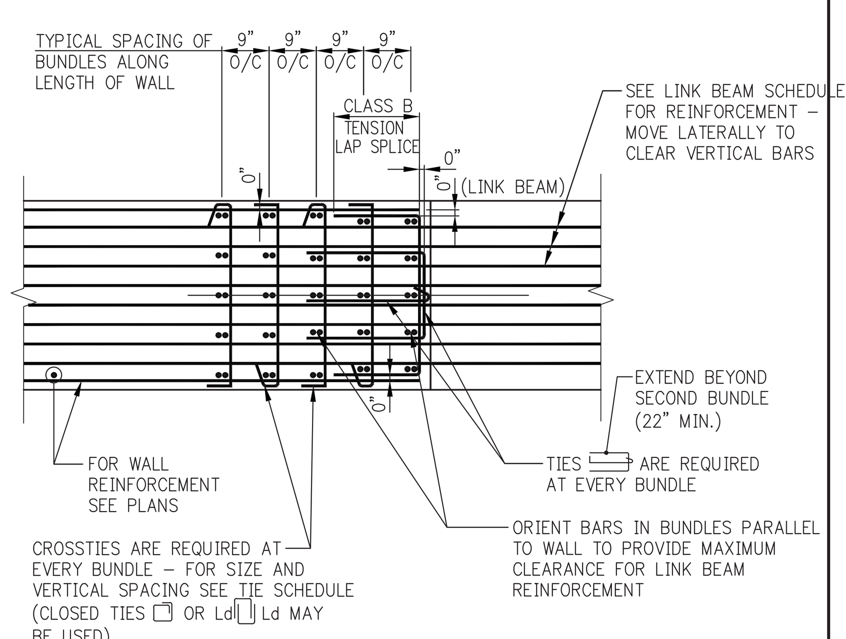

BUNDLED BAR ARRANGEMENT AT LINK BEAM

*TYPICAL MINIMUM SHEARWALL REINFORCEMENT	
WALL THICKNESS (INCHES)	HORIZONTAL AND VERTICAL EACH FACE
UP TO 12	#4@12
12+ TO 16	#4@10
16+ TO 20	#5@12
20+ TO 24	#5@10
24+ TO 28	#6@12
28+ TO 34	#6@10
34+ TO 40	#7@12
40+ TO 48	#7@10
48+ TO 52	#8@12
52+ TO 60	#8@10

*THE REINFORCEMENT SHOWN IN THIS TABLE IS THE MINIMUM AMOUNT THAT MUST BE PROVIDED. HEAVIER REINFORCEMENT AND "ADDITIONAL" REINFORCEMENT MAY BE CALLED FOR ON PLANS, ELEVATIONS, OR IN SECTIONS AND DETAILS.

SHEARWALL TIE SCHEDULE	
NON-TYPICAL VERTICAL BAR SIZE	#4 TIES VERTICAL SPACING(S), BUT NOT TO EXCEED WALL THICKNESS (INCHES)
#6	12
#7	14
#8	16
#9	18
#10	20
#11	22
BUNDLE OF 2 (UP TO #11)	18
#14, #18, #20	24

NOTES:
1. LOCATE LOWEST SET OF TIES S/2 ABOVE TOP OF SLAB.
2. LOCATE TOP SET OF TIES WITHIN S/2 OF BOTTOM REINFORCEMENT IN SLAB OR LINK BEAM.

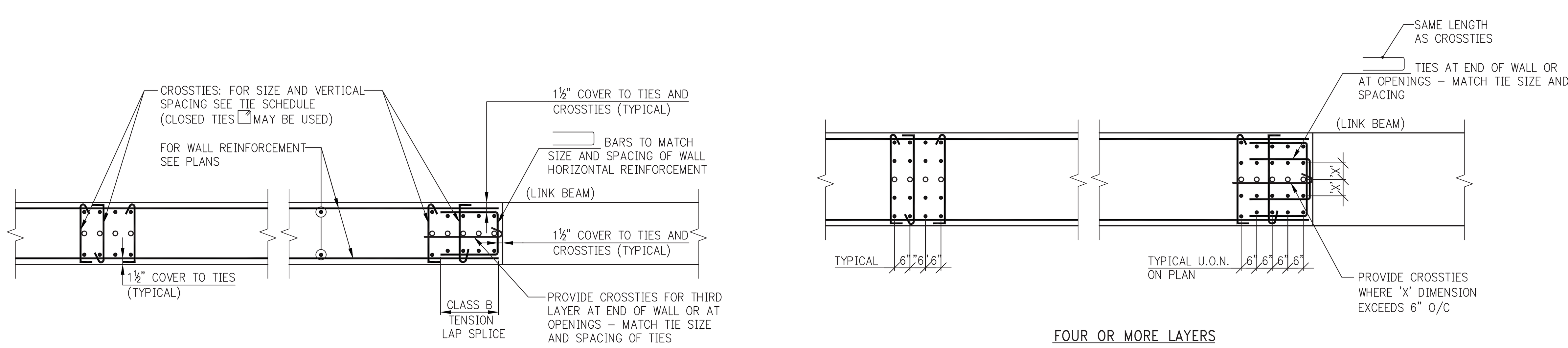

TIE ARRANGEMENTS AT "COLUMN" VERTICAL REINFORCEMENT

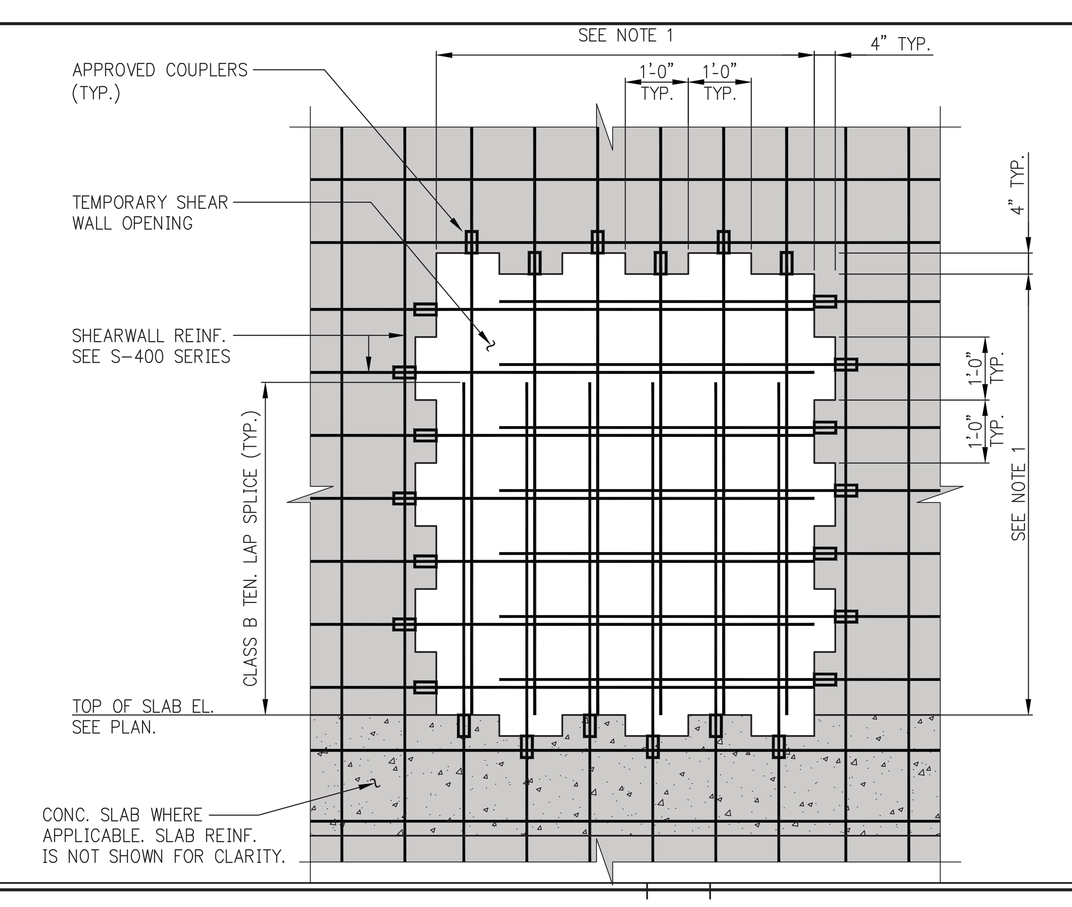

TYP. ELEVATION AT TEMPORARY SHEAR WALL OPENING

NOTE:
1. FOR TEMPORARY WALL OPENING SIZE AND LOCATION REFER TO PLANS AND WALL ELEVATIONS.

KEY PLAN:

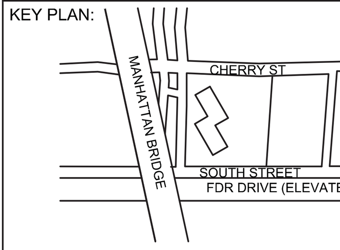

PROJECT NORTH | TRUE NORTH

DEVELOPER:
EXTELL DEVELOPMENT COMPANY
805 Third Ave, 7th Floor
New York, NY 10022
TEL: 212-712-6000 FAX: 212-712-6100

ARCHITECT OF RECORD:
AAI ARCHITECTS, P.C.
14 Wall Street, 2nd Floor
New York, NY 10005
TEL: 212-964-4040 FAX: 212-964-4090

INTERIOR DESIGNER:
MEYER DAVIS
180 Varick St, suite 404
New York, NY 10014
TEL: 212-627-5574

LANDSCAPE DESIGNER:
WEST 8 URBAN DESIGN & LANDSCAPE ARCHITECTURE P.C.
333 Hudson Street, Suite 905
New York, NY 10013
TEL: 212-285-0088 FAX: 212-285-0228

STRUCTURAL ENGINEERS:
WSP
228 East 45th Street
New York, NY 10017
TEL: 212-687-9888 FAX: 646-487-5501

MEP ENGINEERS:
ICOR ASSOCIATES, LLC
485 C Route 1 South, Suite 200
Iseline, NJ 08830
TEL: 908-272-3300 FAX: 908-272-4440

GEOTECHNICAL ENGINEERS:
LANGAN ENGINEERING & ENVIRONMENTAL SERVICES
21 Penn Plaza - 360 West 31st Street, 8th Floor
New York, NY 10001
TEL: 212.479.5400 FAX: 212.479.5444

No.	DESCRIPTION:	DATE:
1	ISSUED FOR DOT	04-28-14
2	FOUNDATION FILING	06-10-14
3	FOUNDATION BID PACKAGE	07-25-14
4	50% DD	08-01-14
5	ISSUED FOR FOUNDATION BID	08-29-14
6	DESIGN DEVELOPMENT	10-07-14
7	ISSUED FOR FOUNDATION BID	01-09-15
8	ISSUED FOR FILING	02-13-15
9	CONCRETE BID PACKAGE	03-06-15
10	ISSUED FOR FILING	07-28-15

Discrepancies must be reported immediately to the Architect before proceeding. Only figured dimensions are to be used. Contractors must check all dimensions on site. This drawing is protected by copyright.

ALL DIMENSIONS ARE SHOWN IN IMPERIAL.

CONSULTANT: WSP

PROJECT:
250 SOUTH STREET
NEW YORK, NY

DRAWING TITLE:
TYPICAL SHEAR WALL DETAILS

SEAL & SIGNATURE: STATE OF NEW YORK AHMAD RAHIMIAN No. 065537 LICENSED PROFESSIONAL ENGINEER

DATE:	07/25/14
PROJECT No:	1302510
DRAWN:	CADD
CHK:	CL
SCALE:	N.T.S.
REV:	
DWG No:	S-949.00
DOB PAGE No:	of

DOB EMPLOYEE STAMP:
Damian Titus
NYC Buildings
APPROVED
Under Directive 2 of 1975
AMENDED APPLICATION
Date: 10/08/2015
NYC Development Hub

DOB B-SCAN:

DEPT OF BLDGS 121185528 Job Number | E5122974560 Scan Code

COLUMN SCHEDULE

FLOOR \ COL. NO.	1	2	3	4	5	6	7	8	9	10	11	12	13	14	15	16	17	18	19	20	21	22	23	24	25	26	27	28	29	30	31	32
FLOOR CONTINUES / 30th FLOOR	1209	2078	2522	2439	1504	1965	2963	2422	1569	2280	2107	1239	2365	2937	2417	1500	2028	3146	2459	1494	2459	2402	4548	4918	3558	4353	4567	4688	4918	3727	4454	4635
29th FLOOR	1235	2122	2575	2482	1528	2000	3015	2464	1593	2322	2148	1265	2408	2989	2459	1523	2062	3198	2501	1517	2501	2444	4632	5002	3623	4417	4651	4772	5002	3794	4520	4719
28th FLOOR	1261	2168	2628	2525	1552	2034	3068	2508	1617	2363	2189	1290	2450	3040	2500	1547	2096	3250	2543	1540	2543	2486	4717	5085	3687	4482	4736	4857	5085	3863	4587	4804
27th FLOOR	1299	2233	2713	2590	1593	2085	3144	2571	1659	2423	2254	1332	2511	3117	2564	1585	2146	3325	2605	1579	2604	2547	4835	5201	3774	4575	4854	4974	5201	3956	4682	4922
26th FLOOR	1415	2396	2923	2792	1714	2226	3370	2740	1779	2595	2421	1453	2683	3334	2731	1705	2284	3548	2773	1696	2778	2721	5018	5378	3913	4709	5037	5158	5378	4096	4821	5105
25th FLOOR	1441	2441	2981	2838	1739	2261	3426	2785	1805	2637	2465	1478	2727	3389	2776	1730	2319	3601	2817	1720	2821	2764	5105	5464	3981	4776	5124	5245	5464	4165	4890	5192
24th FLOOR	1466	2486	3039	2885	1765	2297	3477	2830	1831	2679	2510	1504	2770	3443	2821	1756	2353	3654	2861	1744	2864	2807	5193	5550	4049	4843	5212	5333	5550	4233	4959	5280
23rd FLOOR	1492	2531	3096	2931	1791	2332	3531	2875	1857	2721	2554	1530	2814	3497	2867	1782	2388	3706	2905	1768	2907	2850	5280	5635	4116	4910	5299	5420	5635	4301	5028	5367
22nd FLOOR	1518	2577	3154	2977	1816	2367	3585	2920	1883	2763	2598	1555	2857	3551	2912	1808	2422	3759	2949	1792	2950	2893	5368	5721	4184	4977	5387	5508	5721	4370	5097	5455
21st FLOOR	1544	2622	3212	3023	1842	2403	3638	2964	1909	2805	2643	1581	2901	3606	2957	1833	2457	3812	2992	1816	2993	2936	5456	5807	4252	5044	5475	5595	5807	4438	5166	5543
20th FLOOR	1569	2667	3270	3069	1868	2438	3692	3009	1935	2847	2687	1607	2944	3660	3002	1859	2491	3865	3036	1840	3036	2979	5543	5893	4319	5111	5562	5683	5893	4507	5235	5630
19th FLOOR	1595	2712	3327	3115	1893	2473	3746	3054	1960	2889	2731	1633	2988	3714	3047	1885	2526	3918	3080	1864	3079	3022	5631	5978	4387	5178	5650	5771	5978	4575	5304	5718
18th FLOOR	1621	2758	3385	3161	1919	2509	3799	3099	1986	2931	2776	1658	3032	3769	3092	1910	2561	3973	3124	1888	3122	3065	5718	6064	4455	5245	5737	5858	6064	4644	5373	5805
17th FLOOR	1646	2803	3443	3207	1945	2544	3853	3144	2012	2973	2820	1684	3075	3823	3137	1936	2595	4029	3168	1912	3165	3108	5806	6150	4522	5312	5825	5946	6150	4712	5442	5893
16th FLOOR	1674	2851	3503	3255	1972	2581	3909	3190	2039	3017	2866	1711	3121	3879	3184	1963	2631	4088	3214	1937	3210	3153	5895	6238	4592	5381	5914	6035	6238	4782	5513	5982
15th FLOOR	1699	2897	3561	3301	1998	2617	3962	3235	2065	3059	2911	1737	3165	3934	3230	1989	2666	4144	3258	1961	3253	3196	5983	6324	4660	5448	6002	6123	6324	4851	5582	6070
14th FLOOR	1725	2943	3619	3347	2023	2652	4016	3280	2091	3101	2955	1763	3209	3988	3275	2015	2701	4201	3302	1985	3296	3239	6071	6409	4727	5515	6090	6210	6409	4919	5651	6158
13th FLOOR	1751	2989	3676	3393	2049	2687	4070	3325	2117	3143	3000	1788	3254	4042	3320	2040	2735	4257	3346	2009	3339	3282	6158	6495	4795	5582	6177	6298	6495	4988	5719	6245
12th FLOOR	1776	3034	3734	3439	2075	2723	4124	3370	2143	3185	3044	1814	3298	4097	3365	2066	2770	4313	3390	2033	3382	3325	6246	6581	4863	5649	6265	6386	6581	5056	5788	6333
11th FLOOR	1802	3080	3792	3485	2101	2758	4177	3415	2169	3227	3088	1840	3342	4151	3410	2092	2804	4369	3434	2057	3425	3368	6333	6667	4930	5716	6352	6473	6667	5125	5857	6420
10th FLOOR	1828	3126	3850	3531	2126	2794	4231	3459	2194	3269	3133	1865	3386	4205	3455	2118	2839	4426	3478	2081	3468	3411	6421	6752	4998	5783	6440	6561	6752	5193	5926	6508
9th FLOOR	1854	3172	3907	3577	2152	2829	4285	3504	2220	3311	3177	1891	3431	4259	3500	2143	2873	4482	3521	2105	3511	3454	6508	6838	5066	5850	6527	6648	6838	5261	5995	6595
8th FLOOR	1879	3218	3965	3623	2178	2864	4338	3549	2246	3354	3222	1919	3475	4317	3546	2169	2908	4538	3565	2129	3555	3498	6596	6924	5135	5917	6615	6736	6924	5330	6064	6683
7th FLOOR	1906	3264	4023	3669	2403	3103	4392	3594	2272	3397	3268	1947	3519	4374	3591	2195	2943	4595	3609	2153	3599	3542	6684	7010	5205	5984	6703	6824	7010	5398	6133	6771
6th FLOOR	1933	3310	4081	3715	2429	3142	4446	3639	2298	3439	3313	1975	3563	4432	3636	2220	2977	4653	3653	2177	3643	3586	6771	7095	5274	6051	6790	6911	7095	5467	6202	6858
5th FLOOR	1964	3358	4141	3763	2456	3182	4501	3685	2325	3484	3360	2005	3609	4492	3686	2248	3018	4713	3699	2203	3688	3632	6861	7183	5346	6120	6881	7002	7183	5537	6273	6948
4th FLOOR	2237	3673	4564	4082			4875	3799	2835	3821	3630	2160	3737	4600	4255	2321	3109	4813	3794	2261	3779	3727	7052	7375	5494	6250	7069	7190	7366	5676	6424	7139
3rd FLOOR	2295	3753	4665	4181			5012	3889	3012	3909	3813	2238	3865	4738	4363	2391	3199	4905	3887	2314	3869	3817	7236	7559	5636	6395	7252	7373	7562	5808	6568	7323
2ND FLOOR	2487	3936	4754	4270			5043	3974	3287	3999	4043	2326	3987	4770	4462	2571	3395	5161	4155	2431	3953	3982	7424	7743	5824	6421	7440	7564	7588	5949	6705	7554
1ST FLOOR	2578	4030	4838	4293			5084	3995	3304	4019	4068	2343	4008	4811	4494	2810	3448	5343		2549	4108	4131	7593	7911	5952	6457	7462	7585	7624	5979	6832	7761
BASEMENT	2684	4132	5038	4543			5348	4148	3544	4109	4271	2452	4132	4954	4538	2844	3490	5572		2658	4274	4288	7780	8089	6094	6694	7639	7765	7862	6020	6968	10279
Fnd (service) FLOOR	2264	3518	4204	3762			4408	3481	2902	3441	3572	2070	3391	4141	3840	2394	2991	4610		2263	3618	3584	6386	6595	4968	5584	6290	6397	6554	4967	5724	8490

COLUMN SCHEDULE

FLOOR \ COL. NO.	1	2	3	4	5	6	7	8	9	10	11	12	13	14	15	16	17	18	19	20	21	22	23	24	25	26	27	28	29	30	31	32
FLOOR CONTINUES ON DWG. S-951 / 57th FLOOR	435	766	1003	1141	775	939	1391	1185	830	1100	893	452	1087	1415	1193	775	1025	1560	1221	786	1197	1146	2157	2473	1718	2339	2178	2251	2473	1800	2384	2237
56th FLOOR	461	810	1051	1181	799	972	1442	1224	854	1137	932	478	1131	1464	1233	799	1058	1616	1263	810	1239	1187	2239	2571	1783	2431	2258	2337	2571	1868	2478	2319
55th FLOOR	486	855	1098	1221	823	1006	1493	1262	879	1174	972	505	1175	1514	1272	823	1091	1671	1304	833	1281	1229	2321	2669	1847	2523	2337	2422	2669	1937	2572	2401
54th FLOOR	512	900	1145	1261	846	1040	1545	1301	904	1211	1011	532	1219	1563	1312	846	1124	1727	1346	856	1323	1270	2404	2767	1911	2615	2416	2507	2767	2005	2666	2483
53rd FLOOR	539	946	1194	1302	871	1075	1598	1341	930	1249	1052	560	1265	1613	1353	871	1158	1784	1389	880	1367	1313	2487	2867	1977	2709	2496	2593	2867	2075	2761	2567
52nd FLOOR	565	990	1242	1342	895	1108	1649	1379	955	1286	1091	586	1309	1662	1393	895	1191	1840	1431	903	1409	1354	2569	2965	2042	2801	2576	2678	2965	2144	2855	2649
51st FLOOR	591	1035	1290	1382	919	1142	1700	1418	980	1323	1131	613	1353	1712	1433	919	1224	1896	1472	926	1451	1395	2651	3063	2106	2893	2655	2764	3063	2212	2949	2731
50th FLOOR	616	1080	1340	1422	943	1176	1752	1457	1005	1360	1173	640	1398	1761	1473	943	1257	1951	1514	949	1494	1437	2734	3161	2170	2985	2734	2849	3161	2280	3043	2813
49th FLOOR	655	1144	1415	1479	980	1225	1826	1516	1042	1415	1232	681	1457	1833	1531	979	1306	2025	1572	985	1553	1496	2842	3268	2257	3083	2861	2982	3268	2372	3146	2929
48th FLOOR	744	1272	1577	1673	1073	1340	2010	1655	1136	1553	1364	773	1599	2009	1666	1071	1418	2206	1708	1077	1696	1639	3021	3438	2392	3211	3040	3161	3438	2511	3277	3108
47th FLOOR	769	1317	1626	1715	1097	1375	2063	1697	1160	1593	1403	799	1641	2060	1708	1095	1452	2258	1750	1100	1738	1681	3106	3519	2457	3273	3125	3246	3519	2578	3341	3193
46th FLOOR	795	1361	1676	1757	1121	1409	2115	1740	1184	1632	1443	825	1683	2111	1750	1118	1485	2310	1792	1123	1780	1723	3190	3600	2521	3335	3209	3330	3600	2645	3404	3277
45th FLOOR	821	1406	1727	1799	1145	1444	2168	1782	1208	1672	1483	850	1726	2163	1791	1142	1519	2362	1833	1146	1822	1765	3275	3680	2586	3397	3294	3415	3680	2713	3468	3362
44th FLOOR	846	1450	1779	1841	1169	1478	2221	1825	1232	1711	1525	876	1768	2214	1833	1166	1553	2414	1875	1169	1865	1808	3360	3761	2651	3459	3379	3500	3761	2780	3532	3447
43rd FLOOR	874	1497	1833	1884	1194	1515	2275	1868	1257	1752	1568	903	1812	2267	1876	1191	1588	2468	1918	1193	1908	1852	3446	3843	2717	3522	3465	3586	3843	2849	3598	3533
42nd FLOOR	899	1541	1884	1926	1217	1549	2328	1911	1281	1791	1609	929	1855	2319	1917	1214	1622	2520	1959	1216	1951	1894	3530	3924	2781	3584	3549	3670	3924	2917	3661	3617
41st FLOOR	925	1586	1936	1968	1241	1584	2381	1953	1305	1831	1650	955	1897	2370	1959	1238	1656	2572	2001	1239	1993	1936	3615	4005	2846	3646	3634	3755	4005	2984	3725	3702
40th FLOOR	951	1630	1987	2010	1265	1618	2434	1996	1329	1870	1692	980	1939	2422	2000	1262	1689	2624	2042	1263	2035	1978	3700	4085	2911	3708	3719	3840	4085	3051	3789	3787
39th FLOOR	976	1675	2041	2052	1289	1653	2486	2038	1353	1909	1733	1006	1982	2473	2042	1285	1723	2676	2084	1286	2077	2020	3784	4168	2975	3772	3803	3924	4168	3119	3855	3871
38th FLOOR	1002	1720	2094	2093	1313	1687	2539	2081	1377	1949	1774	1032	2024	2524	2083	1309	1757	2728	2125	1309	2119	2062	3869	4252	3040	3836	3888	4009	4252	3186	3922	3956
37th FLOOR	1028	1764	2147	2136	1336	1722	2592	2123	1400	1988	1816	1058	2067	2576	2125	1333	1791	2780	2167	1332	2162	2105	3954	4335	3104	3901	3973	4094	4335	3253	3988	4041
36th FLOOR	1054	1809	2200	2179	1360	1756	2645	2165	1424	2030	1857	1083	2109	2627	2166	1356	1824	2832	2208	1355	2204	2147	4038	4418	3169	3965	4057	4178	4418	3321	4054	4125
35th FLOOR	1079	1853	2253	2222	1384	1791	2697	2208	1448	2071	1898	1109	2152	2678	2208	1380	1858	2884	2250	1378	2246	2189	4123	4501	3234	4029	4142	4263	4501	3388	4121	4210
34th FLOOR	1106	1900	2309	2267	1409	1827	2752	2252	1474	2114	1941	1136	2195	2732	2251	1405	1893	2938	2293	1402	2290	2233	4209	4586	3300	4096	4228	4349	4586	3457	4189	4296
33rd FLOOR	1132	1944	2362	2310	1433	1862	2805	2294	1498	2156	1983	1162	2238	2783	2292	1429	1927	2990	2334	1425	2332	2275	4294	4669	3364	4160	4313	4434	4669	3525	4255	4381
32nd FLOOR	1158	1989	2415	2353	1457	1896	2857	2337	1521	2197	2024	1188	2280	2834	2334	1452	1961	3042	2376	1448	2374	2317	4378	4752	3429	4224	4397	4518	4752	3592	4321	4465
31st FLOOR	1184	2033	2468	2396	1481	1931	2910	2379	1545	2239	2065	1213	2323	2886	2375	1476	1995	3094	2417	1471	2416	2359	4463	4835	3494	4289	4482	4603	4835	3659	4388	4550

NOTES:

1. FIRST COLUMN DIMENSION SHOWN IN SCHEDULE IS IN THE EAST-WEST DIRECTION.
2. LOADS ARE GIVEN IN KIPS, AND ARE ULTIMATE LOADS EXCEPT FOUNDATION LOADS, WHICH ARE GIVEN AS SERVICE LOADS.
3. CONCRETE STRENGTHS ARE INDICATED IN THE SCHEDULE.
4. COLUMN SIZES AND REINFORCEMENT ARE SHOWN ONLY WHERE SIZES START AND STOP. BLANK SPACES IN BETWEEN INDICATE SAME SIZE AS INDICATED ABOVE AND BELOW.
5. FOR SHEARWALL DETAILS, SEE S-940 SERIES DWGS.
6. FOR COLUMN DETAILS, SEE DWG. S-955.
7. BUTTRESS INDICATED AS "B" IN COLUMN SCHEDULE.
8. INDICATES A CHANGE IN HELD FACE OF THE COLUMN. SEE THE CORRESPONDING FRAMING PLANS.
9. INDICATES ADDITIONAL LOAD ON COLUMN.
10. INDICATES COLUMN BEING PICKED UP.
11. ALL REBAR TO BE TENSION SPLICED OR USE MECHANICAL COUPLERS.
12. COLUMN TIES TWO FLOORS BELOW AND TWO FLOORS ABOVE OUTRIGGER TO MATCH COLUMN TIES SHOWN ON OUTRIGGER ELEVATIONS.
13. ALL #11 REINF. SHALL BE GRADE 75.

KEY PLAN: CHERRY ST / MANHATTAN BRIDGE / SOUTH STREET / FDR DRIVE (ELEVATED)

PROJECT NORTH | TRUE NORTH

DEVELOPER:
EXTELL DEVELOPMENT COMPANY
805 Third Ave, 7th Floor
New York, NY 10022
TEL: 212-712-6000 FAX: 212-712-6100

ARCHITECT OF RECORD:
AAI ARCHITECTS, P.C.
14 Wall Street, 2nd Floor
New York, NY 10005
TEL: 212-964-4040 FAX: 212-964-4090

INTERIOR DESIGNER:
MEYER DAVIS
180 Varick St, suite 404
New York, NY 10014
TEL: 212-627-5574

LANDSCAPE DESIGNER:
WEST 8 URBAN DESIGN & LANDSCAPE ARCHITECTURE P.C.
333 Hudson Street, Suite 905
New York, NY 10013
TEL: 212-285-0088 FAX: 212-285-0228

STRUCTURAL ENGINEERS:
WSP
228 East 45th Street
New York, NY 10017
TEL: 212-687-9888 FAX: 646-487-5501

MEP ENGINEERS:
ICOR ASSOCIATES, LLC
485 C Route 1 South, Suite 200
Iseline, NJ 08830
TEL: 908-272-3300 FAX: 908-272-4440

GEOTECHNICAL ENGINEERS:
LANGAN ENGINEERING & ENVIRONMENTAL SERVICES
21 Penn Plaza - 360 West 31st Street, 8th Floor
New York, NY 10001
TEL: 212.479.5400 FAX: 212.479.5444

No.	DESCRIPTION:	DATE:
1	50% SD	02-28-14
2	100% SD	04-25-14
3	ISSUED FOR DOT	04-28-14
4	FOUNDATION FILING	06-10-14
5	FOUNDATION BID PACKAGE	07-25-14
6	50% DD	08-01-14
7	ISSUED FOR DOT	08-07-14
8	ISSUED FOR FOUNDATION BID	08-29-14
9	DESIGN DEVELOPMENT	10-07-14
10	DESIGN DEVELOPMENT	10-07-14
11	ISSUED FOR FOUNDATION BID	01-09-15
12	ISSUED FOR FILING	02-13-15
13	CONCRETE BID PACKAGE	03-06-15
14	50% CONSTRUCTION DOCUMENTS	04-08-15
15	ADDENDUM #5	05-01-15
16	ISSUED FOR FILING	07-28-15

Discrepancies must be reported immediately to the Architect before proceeding. Only figured dimensions are to be used. Contractors must check all dimensions on site. This drawing is protected by copyright.

ALL DIMENSIONS ARE SHOWN IN IMPERIAL.

CONSULTANT: WSP

PROJECT:
250 SOUTH STREET
NEW YORK, NY

DRAWING TITLE:
COLUMN SCHEDULE 1

SEAL & SIGNATURE: STATE OF NEW YORK — LICENSED PROFESSIONAL ENGINEER

DATE:	07/25/14
PROJECT No:	1302510
DRAWN:	CADD
CHK:	CL
SCALE:	N.T.S.
DWG No:	S-950.01
DOB PAGE No:	of

DOB EMPLOYEE STAMP: | DOB B-SCAN:

Damian Titus
NYC Buildings
APPROVED
Under Directive 2 of 1975
AMENDED APPLICATION
Date: 10/08/2015
NYC Development Hub

30" x 42" Arch E1 -SHEET SIZE
FILE NAME:
PLOT DATE:

DEPT OF BLDGS121305629 Job Number
E5808114268 Scan Code

30" x 42" Arch E1 - SHEET SIZE

COLUMN SCHEDULE

FLOOR \ COL. NO.	1	2	3	4	5	6	7	8	9	10	11	12	13	14	15	16	17	18	19	20	21	22	23	24	25	26	27	28	29	30	31	32
T.O.MECH. PENTHOUSE																																
ROOF/MECH f<= 8000 psi 40'-6"				20 x 24 4-#8 24#	277 8-#8		20 x 36	298 6-#7	350 18 x 24 4-#8	308 24#	311 16 x 28 6-#8	55 24#	6-#7			20 x 36	296 6-#8	280 20 x 24 6-#10	277 24#	289 8-#9	312 35 x 20 6-#8	350 24 x 42 8-#8	306 18 x 24 6-#7	311 24#	280 4-#8	353 24#	304 6-#7	304 24 x 36 6-#9	304 35 x 24 6-#8	304 24 x 36 8-#8	431 35 x 24 6-#8	381 24#	304 6-#8	321 24 x 36 8-#8	304 42 x 28 8-#8	304 24 x 36 8-#8	423 35 x 20 8-#8
71st FLOOR 19'-2"			20 x 36 6-#8	408	346 8-#8	334 36 x 20 6-#8	459	474 22 x 24 4-#8	381	426 24#	170 6-#8 24#	6-#7		450 6-#9	407 6-#11	346	386 12-#10	483 8-#8	477 22 x 24	372	434 24#	401 5-#8 24#	625 6-#7 24#	644 6-#7	521	622	702	664 24#	644	545	630	705 36 x 24 6-#8
70th FLOOR 14'-2"	62 24#	120 6-#7 22 x 24 4-#8	281	525	408 6-#7	425	605	587 24# 6-#7	446	531 24 x 20 4-#8	285 24 x 20 4-#8 24#	65 24#	360 6-#7 22 x 24 4-#8	664 6-#9	523 6-#11	408	474	636 8-#9	595 24 x 22	431	552 35 x 20 6-#8	515 6-#8 35 x 24	876 6-#8 8-#8	943	717	902	944	923 36 x 24	943	747	916	956
69th FLOOR 10'-5"	95	179	347	582	440	471	677	642	480	583	341	99	479	733 6-#8	633 6-#10	440 8-#9	568 12-#10	793 8-#8	652	462	611	573	991	1078	809	1030	1056	1043	1078	843	1046	1071
68th FLOOR 10'-3"	125	231	406	632	470	513	741	691	511	630	391	131	533	794	684 6-#10	470 6-#9	609 8-#9	861	703	491	663	625	1091	1198	888	1142	1152	1146	1198	926	1161	1171
67th FLOOR	155	282	463	682	500	555	802	739	542	676	439	162	586	853	733 6-#9	500	650 6-#8	927	753	520	715	675	1191	1318	966	1254	1248	1250	1318	1008	1276	1271
66th FLOOR	184	332	518	730	529	596	863	786	573	721	487	192	638	911	781	529	690	992	802	548	765	724	1291	1437	1044	1367	1344	1354	1437	1090	1390	1371
65th FLOOR	213	381	574	777	558	636	923	832	603	765	533	223	689	969	828	558 6-#9	729	1057	849	576	815	773	1391	1557	1122	1479 8-#8	1441	1457	1557	1171	1505	1471
64th FLOOR	242	430	629	824	587	675	984	878	633	808	580	253	740	1026	876	587 6-#8	768	1122	897	604	864	821	1491	1677	1199	1592 8-#9	1537	1561	1677	1253	1620	1571
63rd FLOOR 10'-3"	271	478	685	871	615	714	1044	923	663	851	626	282	791	1084	923 6-#9	615	806	1187	945	631	913	869	1591	1797	1277	1704	1633	1665	1797	1335	1735	1671
62nd FLOOR 11'-4"	300	529	742	920	645	755	1106	970	694	896	674	313	844	1144	971 6-#8	645	845	1254	994	660	964	919	1693	1918	1356	1818	1731 6-#8	1770 6-#8	1918	1418	1851	1772 6-#8
61st FLOOR 10'-3"	328	578	798	967	672	794	1167	1016	723	939	721	342	895	1202	1019	672	883	1319	1042	687	1014	967	1793	2038	1434	1930	1827 6-#9	1874 6-#9	2038 8-#8	1500	1966 8-#9	1872 6-#9
60th FLOOR	356	626 22 x 24 4-#8	853	1014 4-#8	700	832	1227	1062	751	983	767	370	946 22 x 24 4-#8	1259	1066	700	921	1384	1089 24 x 22 4-#8	714	1063	1015	1893	2157 6-#9	1512	2042	1924	1977	2157 8-#9	1582	2081 8-#10	1972
59th FLOOR 10'-3"	384	677 24 x 26 6-#8	909	1062 4-#9	727	871	1288 6-#7	1108	780	1026	814	399	998 24 x 26 6-#8	1317	1113	727	959	1449	1138 24 x 26 6-#8	740	1112	1063	1993	2277 8-#9	1590	2155	2020	2081	2277	1663	2196	2072 6-#9
58th FLOOR f<= 8000 psi 10'-0" 24#	409 6-#7 24 x 26	721 6-#8 20 x 36	956 6-#8 20 x 24	1101 4-#9 24#	751 6-#7 36 x 20	905 6-#8 20 x 36	1339 6-#8 24#	1146 6-#7 24#	805 6-#7 24#	1063 24 x 20 6-#8	853 24 x 20 4-#8	425 24#	1042 6-#7 24 x 26	1366 20 x 36 6-#8	1153 20 x 24 6-#8	751 24#	992 6-#8 36 x 20	1505 6-#8 24 x 42 8-#8	1180 24 x 26 6-#8	763 24#	1154 6-#7 36 x 20	1105 6-#8 36 x 20	2075 6-#8 36 x 24	2375 8-#8 24 x 36	1654 8-#9 36 x 24	2247 6-#8 24 x 36	2099 8-#9 36 x 24	2166 6-#9 36 x 24	2375 6-#9 24 x 36	1732 8-#9 42 x 28	2290 8-#8 24 x 36	2155 8-#9 36 x 24 6-#10
FLOOR \ COL. NO.	1	2	3	4	5	6	7	8	9	10	11	12	13	14	15	16	17	18	19	20	21	22	23	24	25	26	27	28	29	30	31	32

NOTES:

1. FOR BALANCE OF INFORMATION SEE DRAWING S-950.

KEY PLAN:

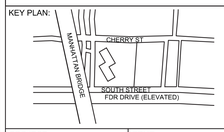

PROJECT NORTH

TRUE NORTH

DEVELOPER:
EXTELL DEVELOPMENT COMPANY
805 Third Ave, 7th Floor
New York, NY 10022
TEL: 212-712-6000 FAX: 212-712-6100

ARCHITECT OF RECORD:
AAI ARCHITECTS, P.C.
14 Wall Street, 2nd Floor
New York, NY 10005
TEL: 212-964-4040 FAX: 212-964-4090

INTERIOR DESIGNER:
MEYER DAVIS
180 Varick St, suite 404
New York, NY 10014
TEL: 212-627-5574

LANDSCAPE DESIGNER:
WEST 8 URBAN DESIGN & LANDSCAPE ARCHITECTURE P.C.
333 Hudson Street, Suite 905
New York, NY 10013
TEL: 212-285-0088 FAX: 212-285-0228

STRUCTURAL ENGINEERS:
WSP
228 East 45th Street
New York, NY 10017
TEL: 212-687-9888 FAX: 646-487-5501

MEP ENGINEERS:
ICOR ASSOCIATES, LLC
485 C Route 1 South, Suite 200
Iseline, NJ 08830
TEL: 908-272-3300 FAX: 908-272-4440

GEOTECHNICAL ENGINEERS:
LANGAN ENGINEERING & ENVIRONMENTAL SERVICES
21 Penn Plaza - 360 West 31st Street, 8th Floor
New York, NY 10001
TEL: 212.479.5400 FAX: 212.479.5444

No.	DESCRIPTION:	DATE:
1	50% SD	02-28-14
2	100% SD	04-25-14
3	ISSUED FOR DOT	04-28-14
4	FOUNDATION FILING	06-10-14
5	FOUNDATION BID PACKAGE	07-25-14
6	50% DD	08-01-14
7	ISSUED FOR FOUNDATION BID	08-29-14
8	DESIGN DEVELOPMENT	10-07-14
9	ADDENDUM #5	05-01-15
10	ISSUED FOR FILING	07-28-15

Discrepancies must be reported immediately to the Architect before proceeding. Only figured dimensions are to be used. Contractors must check all dimensions on site. This drawing is protected by copyright.

ALL DIMENSIONS ARE SHOWN IN IMPERIAL.

CONSULTANT:
WSP

PROJECT:
250 SOUTH STREET
NEW YORK, NY

DRAWING TITLE:
COLUMN
SCHEDULE 2

SEAL & SIGNATURE:
STATE OF NEW YORK · RICARDO RAMIREZ · No. 065657 · LICENSED PROFESSIONAL ENGINEER

DATE: 07/25/14
PROJECT No: 1302510
DRAWN: CADD | REV:
CHK: CL
SCALE: N.T.S.
DWG No: **S-951.00**
DOB PAGE No: of

DOB EMPLOYEE STAMP:
Damian Titus
NYC Buildings
APPROVED
Under Directive 2 of 1975
AMENDED APPLICATION
Date: 10/08/2015
NYC Development Hub

DOB B-SCAN:

FILE NAME:
PLOT DATE:

DEPT OF BLDGS 121185528 Job Number
ES105612239 Scan Code

30" x 42" Arch E1 - SHEET SIZE

STEEL COLUMN SCHEDULE 1

COL. NO.	X-A			B		C		D		E	F	G		J		
FLOOR	1	3	5	1	3	1	3	5	7	7	9	1	5	4	8	11
5TH FL.																
4TH FL.	W14 x 159	W14 x 233	W14 x 211	W14 x 145	W14 x 176	W14 x 159	W14 x 193	W14 x 132	W10 x 54			W12 x 96				
3RD FL.																
2ND FL.																
1ST FL.																
CELLAR	W14 x 159	W14 x 233	W14 x 211	W14 x 145	W14 x 176	W14 x 159	W14 x 193	W14 x 132	W10 x 54	W12 x 87	W12 x 87	W12 x 96	W12 x 96	W14 x 132	HSS10x10¾	W14 x 132
PIER																
BASE PLATE AND BOTTOM OF BASE PL. EL.	24x22x1⅜	26x22x1¾	26x22x1¾	24x22x1⅜	26x22x1¾	24x22x1¾	26x22x2¼	24x22x1⅜	20x16x1¼	22x20x1⅜	22x20x1⅜	22x20x1½	22x20x1½	24x22x1⅜	18x18x1	24x22x1⅜
No. OF A.B.																
ANCHOR BOLTS F1554 GR 36 (U.O.N) SEE TYP. DETAILS																
FLOOR	1	3.2	4	1	3	1	3	5	7	7	9	1	5	4	8	11
COL. NO.	X-A			B		C		D		E	F	G		J		

COL. NO.	K		L			M			T-E	T-F		T-G	T-H		WT-D
FLOOR	1.1	2	4	8	11	1	P-12	P-10	WT-2	T-1	T-2	T-2	T-1	T-2	P-48
5TH FL.															
4TH FL.									W14 x 109	W12 x 79	W14 x 145	W14 x 90	W12 x 87	W14 x 176	
3RD FL.						W12X120		W12X120							
2ND FL.															W14 x 109
1ST FL.						W12X120		W12X120							
CELLAR	W14 x 120	W14 x 132	W14 x 120	HSS10x10¾	W14 x 109	W14X145	W14 x 145		W14 x 109	W12 x 79	W14 x 145	W14 x 90	W12 x 87	W14 x 176	W14 x 109
PIER															
BASE PLATE AND BOTTOM OF BASE PL. EL.	24x22x1⅜	24x22x1⅜	24x22x1⅜	18x18x1	24x22x1¼	24X22X1⅜	24x22x1⅜		24x22x1¼	BP-11 22x20x1½	24x22x1½	24x22x1½	22x20x1½	26x22x1¾	24x22x1½
No. OF A.B.															
ANCHOR BOLTS F1554 GR 36 (U.O.N) SEE TYP. DETAILS															
FLOOR	1.1	2	4	8	11	1	P-10		WT-2	T-1	T-2	T-2	T-1	T-2	P-48
COL. NO.	K		L			M			T-E	T-F		T-G	T-H		WT-D

NOTES:

1. COLUMN LOADS SHOWN IN SCHEDULE ARE LRFD FACTORED LOADS IN KIPS.
2. ALL COLUMNS SHALL BE ASTM A-992 (Fy=50 KSI) STEEL U.O.N. WITH AN ASTERISK (*) INDICATING A-36 (Fy=36 KSI) STEEL.
3. ALL BASE PLATES TO BE ASTM A-572 (Fy=50 KSI) U.O.N.
4. FIRST DIMENSION OF BASE PLATE IS PARALLEL TO COLUMN WEB.
5. FIRST DIMENSION OF BUTTRESS AND PIERS IS IN EAST/WEST DIRECTION.
6. ALL SPLICES TO BE 4'-0" ABOVE FINISHED FLOOR, EXCEPT BRACED FRAMES COLUMNS SPLICES SHALL BE IN THE MIDDLE THIRD OF THE FLOOR TO FLOOR HEIGHT.
7. FLOOR TO FLOOR DIMENSIONS SHOWN ARE TO TOP OF CONCRETE SLAB.
8. COLUMN SPLICE ELEVATION SHALL BE MAINTAINED AT THE THEORETICAL ELEVATION BY SHIMMING AT EVERY SECOND TIER.
9. HEAVY LINE AT TOP INDICATES TOP OF COLUMN. HEAVY LINE AT BOTTOM OF COLUMN INDICATES BOTTOM OF BASE PL. TOP AND BOTTOM OF COLUMN ELEVATIONS ARE TO BE CONFIRMED WITH FRAMING PLANS, FOUNDATION PLANS AND SECTIONS. GC TO COORDINATE.
10. ⊠ INDICATES EITHER BEAM RUNNING OVER COLUMN OR COLUMN SITTING OVER BEAM.
11. * INDICATES COLUMNS THAT ARE PART OF LATERAL SYSTEM
12. (...) INDICATES COLUMNS DESIGNED FOR VEHICULAR IMPACT
13. FOR COLUMN BASE PLATE DETAILS AND SPLICE REQUIREMENTS, SEE DWG. S-957 & S-958
14. THE ANCHOR BOLTS LENGTH TO BE IN ACCORDANCE TO SCHEDULE FOR COMPRESSION IN DWG. S-957, UNLESS LENGTH (LE) FOR COLUMNS IN TENSION IS SHOWN IN THE COLUMN SCHEDULE.
15. T... INDICATES SPLICE OR HANGER CONNECTION TENSION FACTORED LOAD IN KIPS. ALL WELDS AT TENSION CONNECTIONS TO BE FULLY INSPECTED.
16. FOR GENERAL NOTES, SEE DWG. FO-001 & FO-002.

LEGEND:

- B INDICATES BUTTRESS
- P INDICATES PIER (SEE NOTE 6/DWG. FO-100)
- LE INDICATES BOLT EMBEDMENT LENGTH
- (T) INDICATES REBARS TENSION SPLICE

STEEL COLUMN SCHEDULE 2

COL. NO.	P-B	P-C	P-E		P-F		P-G		P-H								
FLOOR	P-50	P-30	P-48	P-50	P-50	P-52	P-30	P-34	1	P-14	P-18	P-22	P-26	P-30	P-34	P-36	P-40
5TH FL.																	
4TH FL.																	
3RD FL.																	
2ND FL.	W12 x 53		W14 x 90	W12 x 72	W12 x 65	W14 x 120											
1ST FL.																W14 x 109	W14 x 90
CELLAR	W12 x 53	W12 x 96	W14 x 90	W12 x 72	W12 x 65	W14 x 120	W14 x 99	W12 x 87	W12 x 79	W14 x 176	W14 x 176	W14 x 159	W14 x 159	W14 x 159	W14 x 132	W14 x 109	W14 x 90
PIER																	
BASE PLATE AND BOTTOM OF BASE PL. EL.	22x20x1¼	22x20x1½	24x22x1¼	22x18x1¼	22x18x1¼	24x22x1⅜	24x22x1¼	22x20x1⅜	22x20x1¼	24x22x1⅜	26x22x1¾	24x22x1¾	24x22x1¾	24x22x1¾	24x22x1⅜	24x22x1¼	24x22x1¼
No. OF A.B.																	
ANCHOR BOLTS F1554 GR 36 (U.O.N) SEE TYP. DETAILS																	
FLOOR	P-50	P-30	P-48	P-50	P-50	P-52	P-30	P-35	1	P-14	P-18	P-22	P-26	P-30	P-34	P-36	P-40
COL. NO.	P-B	P-C	P-E		P-F		P-G		P-H								

COL. NO.	P-G.8				P-J				P-J.3
FLOOR	P-42	P-45	P-48	P-50	P-40	P-42	P-45	P-50	P-40
5TH FL.									
4TH FL.									
3RD FL.									
2ND FL.	W12 x 87	W12 x 72	W12 x 65	W12 x 65	W12 x 65	W14 x 90	W14 x 132	W14 x 90	
1ST FL.					W12 x 65				
CELLAR	W12 x 87	W12 x 72	W12 x 65	W12 x 65		W14 x 90	W14 x 132	W14 x 90	W12 x 65
PIER									
BASE PLATE AND BOTTOM OF BASE PL. EL.	22x20x1⅜	22x18x1¼	22x18x1¼	22x18x1¼		24x22x1¼	24x22x1½	24x22x1¼	22x18x1¼
No. OF A.B.									
ANCHOR BOLTS F1554 GR 36 (U.O.N) SEE TYP. DETAILS									
FLOOR	P-42	P-45	P-48	P-50	P-40	P-42	P-45	P-50	P-40
COL. NO.	P-G.8				P-J				P-J.3

COL. NO.	P-K													
FLOOR	Y-2	1	P-10	P-17	P-23	P-27	P-33	P-40	P-46	P-50	P-51	P-55	P-58.5	P-65
5TH FL.														
4TH FL.														
3RD FL.	W12 x 65		W14 x 233	W14 x 311	W14 x 311	W14 x 342	W14 x 311	W14 x 370	W14 x 233	W14 x 211	W14 x 342	W14 x 311	W14 x 311	W14 x 398
2ND FL.														W14 x 398
1ST FL.	W12 x 65													
CELLAR		W12 x 65	W14 x 233	W14 x 311	W14 x 311	W14 x 342	W14 x 311	W14 x 370	W14 x 233	W14 x 211	W14 x 342	W14 x 311	W14 x 311	
PIER														B44x30 12-#10
BASE PLATE AND BOTTOM OF BASE PL. EL.		22x18x1¼	26x22x2¼	28x22x2½	28x22x2½	28x24x2¾	28x22x2½	BP-1A 38x24x3	26x22x2¼	26x22x1¾	28x24x2¾	28x22x2½	28x22x2½	BP-3 36x22x2½
No. OF A.B.								8						8
ANCHOR BOLTS F1554 GR 36 (U.O.N) SEE TYP. DETAILS								1½"ø GR 55						1½"ø GR 55
FLOOR	Y-2	1	P-10	P-17	P-23	P-27	P-33	P-40	P-46	P-50	P-51	P-55	P-58.5	P-65
COL. NO.	P-K													

COL. NO.	P-K.5	P-L					P-M						
FLOOR	P-40	1	P-10	P-13	P-17	Y-2	P-40	P-46	P-50.2	P-51	P-55	P-59	P-65
5TH FL.													
4TH FL.													
3RD FL.			W14 x 109	W14 x 132	W14 x 132	W12 x 65	W14 x 370	W14 x 342	W14 x 342	W14 x 342	W14 x 370	W14 x 342	W14 x 370
2ND FL.													W14 x 370
1ST FL.	4'-8"					W12 x 65						W14 x 342	4'-8"
CELLAR	W12 x 65	W14 x 109	W14 x 109	W14 x 132	W14 x 132		W14 x 370	W14 x 342	W14 x 342	W14 x 342	W14 x 370		
PIER												40x30 12-#10	36 x 36 12-#10
BASE PLATE AND BOTTOM OF BASE PL. EL.	BP-1 34x20x1¾	24x22x1¼	24x22x1¼	BP-2 34x28x2¼	BP-2 34x28x2¼		BP-2A 38x32x3	BP-1b 30x30x3	28x24x3	28x24x3	28x24x3 + 36x36 8 - #8	28x24x2¾	BP-4 32x22x2½
No. OF A.B.	8			8	8		9						6
ANCHOR BOLTS F1554 GR 36 (U.O.N) SEE TYP. DETAILS	1½"ø GR 55			1½"ø GR 55	1½"ø GR 55		1½"ø GR 55	1½"ø GR 55					1½"ø GR 55
FLOOR	P-40	1	P-10	P-13	P-17	Y-2	P-40	P-46	P-50.2	P-51	P-55	P-59	P-65
COL. NO.	P-K.5	P-L					P-M						

KEY PLAN:

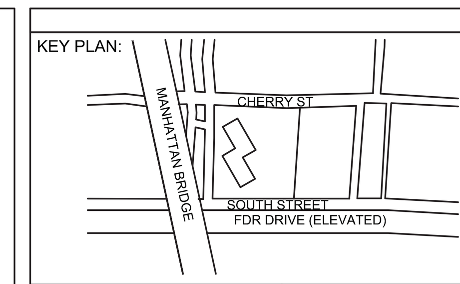

PROJECT NORTH | TRUE NORTH

DEVELOPER:
EXTELL DEVELOPMENT COMPANY
805 Third Ave, 7th Floor
New York, NY 10022
TEL: 212-712-6000 FAX: 212-712-6100

ARCHITECT OF RECORD:
AAI ARCHITECTS, P.C.
14 Wall Street, 2nd Floor
New York, NY 10005
TEL: 212-964-4040 FAX: 212-964-4090

INTERIOR DESIGNER:
MEYER DAVIS
180 Varick St, suite 404
New York, NY 10014
TEL: 212-627-5574

LANDSCAPE DESIGNER:
WEST 8 URBAN DESIGN & LANDSCAPE ARCHITECTURE P.C.
333 Hudson Street, Suite 905
New York, NY 10013
TEL: 212-285-0088 FAX: 212-285-0228

STRUCTURAL ENGINEERS:
WSP
228 East 45th Street
New York, NY 10017
TEL: 212-687-9888 FAX: 646-487-5501

MEP ENGINEERS:
ICOR ASSOCIATES, LLC
485 C Route 1 South, Suite 200
Iseline, NJ 08830
TEL: 908-272-3300 FAX: 908-272-4440

GEOTECHNICAL ENGINEERS:
LANGAN ENGINEERING & ENVIRONMENTAL SERVICES
21 Penn Plaza - 360 West 31st Street, 8th Floor
New York, NY 10001
TEL: 212.479.5400 FAX: 212.479.5444

No.	DESCRIPTION:	DATE:
1	ISSUED FOR FOUNDATION BID	07-25-14
2	50% DD	08-01-14
3	ISSUED FOR DOT	08-07-14
4	ISSUED FOR FOUNDATION BID	08-29-14
5	DESIGN DEVELOPMENT	10-07-14
6	ISSUED FOR FOUNDATION BID	01-09-15
7	ISSUED FOR FILING	02-13-15
8	STEEL BID PACKAGE	02-24-15
9	ADDENDUM #3	03-27-15
10	50% CONSTRUCTION DOCUMENTS	04-08-15
11	ADDENDUM #4	04-24-15
12	ADDENDUM #5	05-01-15
13	ADDENDUM #10	07-22-15
14	ISSUED FOR FILING	07-28-15

Discrepancies must be reported immediately to the Architect before proceeding. Only figured dimensions are to be used. Contractors must check all dimensions on site. This drawing is protected by copyright.

ALL DIMENSIONS ARE SHOWN IN IMPERIAL.

CONSULTANT: WSP

PROJECT:
250 SOUTH STREET
NEW YORK, NY

DRAWING TITLE:
STEEL COLUMN SCHEDULE 1

SEAL & SIGNATURE: STATE OF NEW YORK — AHMAD RAHIMIAN — No. 065537 — LICENSED PROFESSIONAL ENGINEER

DATE:	07/25/14
PROJECT No:	1302510
DRAWN:	CADD
CHK:	CL
SCALE:	N.T.S.
REV:	
DWG No:	S-953.00
DOB PAGE No:	of

DOB EMPLOYEE STAMP:
Damian Titus
Buildings
APPROVED
Under Directive 2 of 1975
AMENDED APPLICATION
Date: 10/08/2015
NYC Development Hub

DOB B-SCAN:

FILE NAME:
PLOT DATE:

DEPT OF BLDGS121305028 Job Number
ES4674818115 Scan Code
30" x 42" Arch E1 - SHEET SIZE

STEEL COLUMN SCHEDULE 3

COL. NO.	P-N		P-P				P-Q		P-R		P-S		P-T																	P-V					P-U		P-W															
FLOOR	P-13	P-17	P-23	P-27	P-33	P-40	P-15	P-17	P-10	Y-2	P-15	P-17	P-10	P-17	P-23	P-27	P-33	P-40	P-46	P-50.2	P-51	P-55	P-58	P-60	P-65	Y-2		Y-2	P-10	P-17	P-23	P-27		P-33	P-40	P-3	P-10	P-17	P-23	P-27	P-33	P-40	P-46	P-50.2	P-51	P-55	P-58	P-60	P-65
5TH FL.																																																		
4TH FL.																																																		
3RD FL.	W14 x 132	W14 x 233	W14 x 283	W14 x 283	W14 x 283	W14 x 370	W14 x 132	W14 x 193	W14 x 132		W12 x 170	W12 x 170	W14 x 193	W14 x 257	W14 x 257	W14 x 257	W14 x 233	W14 x 370	W14 x 342	W14 x 342	W14 x 342	W14 x 455		W14 x 398	W14 x 398																									
2ND FL.										W12 x 65														4'-8"	W14x398	W12 x 65		W12 x 72	W14 x 90	W14 x 99	W14 x 99	W14 x 90		W14 x 90	W14 x 109	W10 x 54	W10 x 54	W10 x 54	W10 x 54	W10 x 54	W12 x 72	W12 x 65	W14 x 109	W14 x 90	W14 x 132	W14 x 132	W14 x 132	W14 x 132	W14 x 145	
1ST FL.										W12 x 65													W14x550		W12 x 65		W12 x 72												W12 x 72										
CELLAR	W14 x 132	W14 x 233	W14 x 283	W14 x 283	W14 x 283	W14 x 370	W14 x 132	W14 x 193	W14 x 132		W12 x 170	W12 x 170	W14 x 193	W14 x 257	W14 x 257	W14 x 257	W14 x 233	W14 x 370	W14 x 342	W14 x 342	W14 x 342	W14 x 455	W14 x 99	W14 x 398		W12 x 65			W14 x 90	W14 x 99	W14 x 99	W14 x 90		W14 x 90	W14 x 109	W10 x 54	W10 x 54	W10 x 54	W10 x 54	W10 x 54										
PIER																								B38 x 38 12-#10	B44 x 30 12-#10											B38 x 69 26-#10	B38 x 30 6-#8	B38 x 30 8-#8	B38 x 30 8-#8	B38 x 30 8-#8	B38 x 30 8-#8	B38 x 30 12-#10	B40 x 30 12-#10	B40 x 30 12-#10	B40 x 30 12-#10	B40 x 30 12-#10	B40 x 30 12-#10	B40 x 30 12-#10	B48 x 30 12-#10	B48 x 30 12-#10	
BASE PLATE AND BOTTOM OF BASE PL. EL.	BP-1 34x20x¾	BP-1 34x20x¾	26x24x2¾	26x22x2¼	26x24x2½	BP-1a 38x24x3	BP-1 34x20x¾	BP-1 34x20x¾	24x22x⅜		BP-1b 32x30x2¼	BP-1b 32x30x2¼	26x22x¾	26x22x⅞	26x22x¾	26x22x¾	26x22x2¼	BP-2a 38x32x3	BP-1b 32x30x3	30x24x3	30x24x3	28x24x3	22x20x⅜	30x24x3	BP-5 36x22x2½				24x22x¾	24x22x¼	24x22x¼	24x22x¼		24x22x¾	24x22x¼	20x18x¾	20x18x¾	20x18x¾	20x18x¾	20x18x¾	20x18x¾	22x18x¾	24x22x¼	24x22x¾	24x22x¾	24x22x⅞	26x22x2¾	24x22x2¾	26x22x¾	24x22x⅞	
No. OF A.B.	8	8				8	8	8			9	9						9	7						∞																									
ANCHOR BOLTS F1554 GR 36 (U.O.N) SEE TYP. DETAILS	1½"ø (DR-55)	1½"ø (DR-55)				1½"ø (DR-55)	1½"ø (DR-55)	1½"ø (DR-55)			1½"ø (DR-55)	1½"ø (DR-55)						1½"ø (DR-55)	1½"ø (DR-55)						1½"ø (DR-55)																									
FLOOR	P-13	P-17	P-23	P-27	P-33	P-40	P-15	P-17	P-10	Y-2	P-15	P-17	P-10	P-17	P-23	P-27	P-33	P-40	P-46	P-50.2	P-51	P-55	P-58	P-60	P-65	Y-2		Y-2	P-10	P-17	P-23	P-27		P-33	P-40	P-3	P-10	P-17	P-23	P-27	P-33	P-40	P-46	P-50.2	P-51	P-55	P-58	P-60	P-65
COL. NO.	P-N		P-P				P-Q		P-R		P-S		P-T															P-V					P-U		P-W															

FOR NOTES AND LEGEND SEE S-953

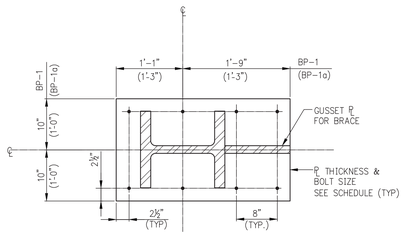

BP-1
(BP-1a)

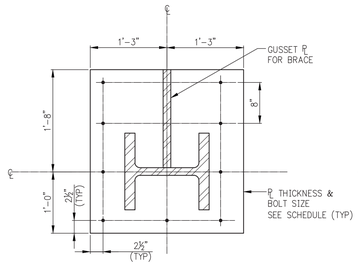

BP-1b

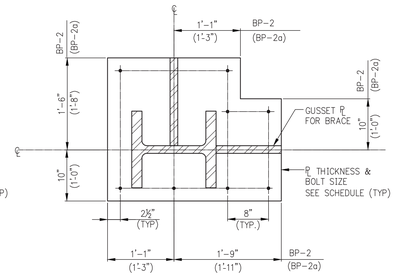

BP-2
(BP-2a)

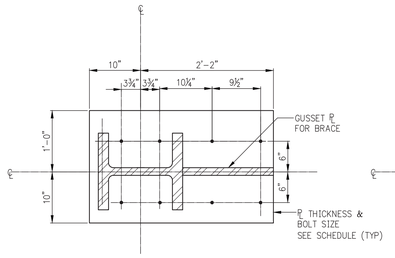

BP-3

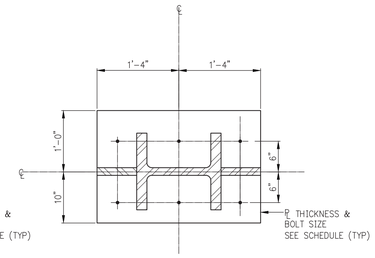

BP-4

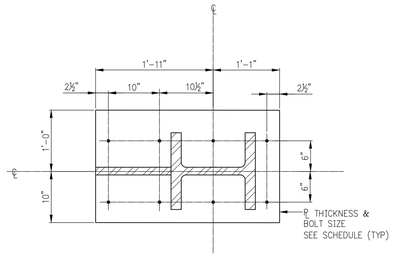

BP-5

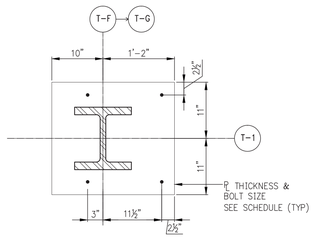

BP-11

BASE PLATE DETAILS

FILE NAME:
PLOT DATE:

KEY PLAN:

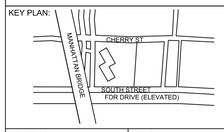

PROJECT NORTH

TRUE NORTH

DEVELOPER:
EXTELL DEVELOPMENT COMPANY
805 Third Ave, 7th Floor
New York, NY 10022
TEL: 212-712-6000 FAX: 212-712-6100

ARCHITECT OF RECORD:
AAI ARCHITECTS, P.C.
14 Wall Street, 2nd Floor
New York, NY 10005
TEL: 212-964-4040 FAX: 212-964-4090

INTERIOR DESIGNER:
MEYER DAVIS
180 Varick St, suite 404
New York, NY 10014
TEL: 212-627-5574

LANDSCAPE DESIGNER:
WEST 8 URBAN DESIGN & LANDSCAPE ARCHITECTURE P.C.
333 Hudson Street, Suite 905
New York, NY 10013
TEL: 212-285-0088 FAX: 212-285-0228

STRUCTURAL ENGINEERS:
WSP
228 East 45th Street
New York, NY 10017
TEL: 212-687-9888 FAX: 646-487-5501

MEP ENGINEERS:
ICOR ASSOCIATES, LLC
485 C Route 1 South, Suite 200
Iselin, NJ 08830
TEL: 908-272-3300 FAX: 908-272-4440

GEOTECHNICAL ENGINEERS:
LANGAN ENGINEERING & ENVIRONMENTAL SERVICES
21 Penn Plaza - 360 West 31st Street, 8th Floor
New York, NY 10001
TEL: 212.479.5400 FAX: 212.479.5444

No.	DESCRIPTION:	DATE:
1	ISSUED FOR FOUNDATION BID	07-25-14
2	50% DD	08-01-14
3	ISSUED FOR FOUNDATION BID	08-29-14
4	DESIGN DEVELOPMENT	10-07-14
5	ISSUED FOR FOUNDATION BID	01-09-15
6	ISSUED FOR FILING	02-13-15
7	STEEL BID PACKAGE	02-24-15
8	ADDENDUM #3	03-27-15
9	50% CONSTRUCTION DOCUMENTS	04-08-15
10	ADDENDUM #4	04-24-15
11	ADDENDUM #5	05-01-15
12	ADDENDUM #10	07-22-15
13	ISSUED FOR FILING	07-28-15

Discrepancies must be reported immediately to the Architect before proceeding. Only figured dimensions are to be used. Contractors must check all dimensions on site. This drawing is protected by copyright.

ALL DIMENSIONS ARE SHOWN IN IMPERIAL.

CONSULTANT:
WSP

PROJECT:
250 SOUTH STREET
NEW YORK, NY

DRAWING TITLE:
STEEL COLUMN SCHEDULE 2

SEAL & SIGNATURE:
STATE OF NEW YORK AHMAD RAHIMIAN No. 085551 LICENSED PROFESSIONAL ENGINEER

DATE:	07/25/14
PROJECT No:	1302510
DRAWN: CADD	REV:
CHK: CL	
SCALE: N.T.S.	

DWG No: **S-954.00**

DOB PAGE No: of

DOB EMPLOYEE STAMP:
Damian Titus
BuildTYPE
APPROVED
Under Directive 2 of 1975
AMENDED APPLICATION
Date: 10/08/2015
NYC Development Hub

DOB B-SCAN:

DEPT OF BLDGS121185528 Job Number
ES3150156624 Scan Code
30" x 42" Arch E1 - SHEET SIZE

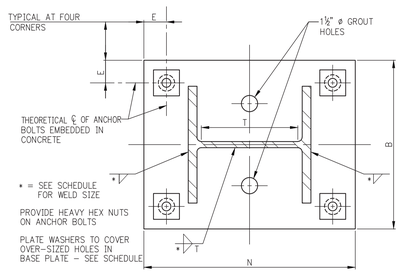

PLAN VIEW OF BASE PLATE AT COLUMN IN COMPRESSION ONLY

NOTE:
DO NOT USE THIS DETAIL FOR COLUMNS SUBJECTED TO UPLIFT FORCES OR LARGE BENDING MOMENTS.

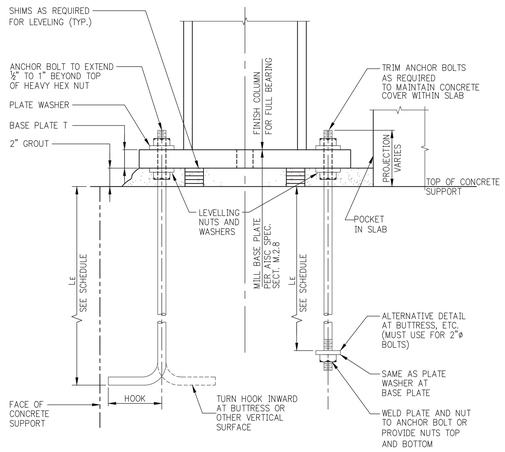

SECTION - COMPRESSION ONLY

BASE PLATE DETAILS

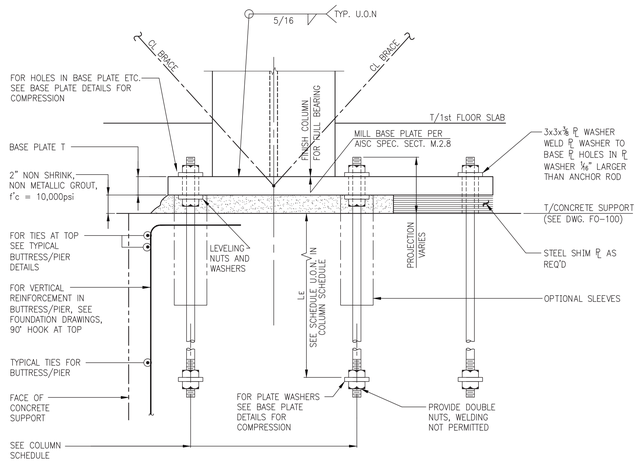

SECTION - COLUMN AT BRACED FRAMES

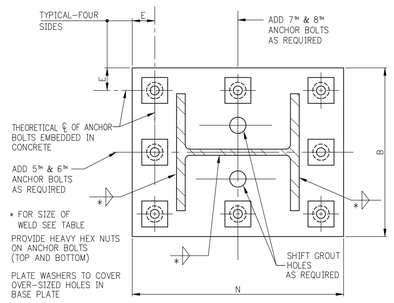

PLAN VIEW OF BASE PLATE AT COLUMN IN TENSION

NOTE:
USE THIS DETAIL FOR COLUMNS SUBJECTED TO UPLIFT FORCES OR LARGE BENDING MOMENTS WHERE CALLED FOR IN THE COLUMN SCHEDULE OR IN SPECIFIC PROJECT DETAILS.

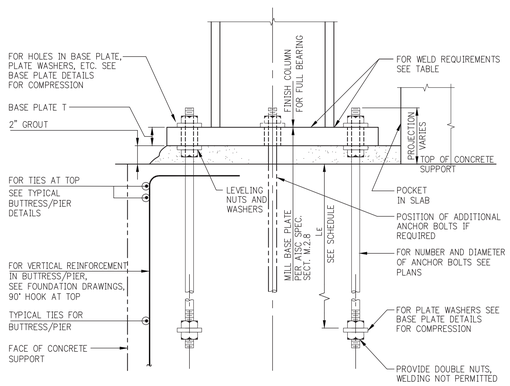

SECTION - COLUMN IN TENSION

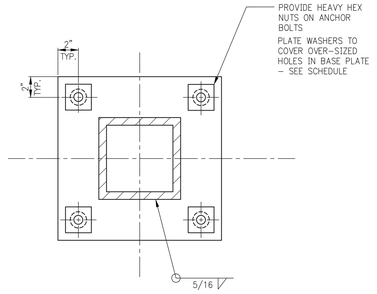

HSS COLUMN BASE PLATE DETAIL

MINIMUM BASE PLATE/ANCHOR BOLT REQUIREMENTS UNLESS OTHERWISE SHOWN IN COLUMN SCHEDULE OR DETAILS

COLUMN SIZES	ALL GRAVITY COLUMNS (U.O.N)	ALL BRACED FRAMES COLUMNS (U.O.N)
* MINIMUM WELD SIZE - COLUMN TO BASE PLATE	5/16	5/16
MINIMUM ANCHOR BOLT REQUIREMENT	4-1" DIA.	6-1 1/2" DIA. F1554 GR 55
HOLE DIAMETER IN BASE PLATE	1 1/2"	1 3/4"
E = EDGE DISTANCE TO HOLES	2 1/2"U.O.N	2 3/4"
LE = BOLT EMBEDMENT LENGTH	1'-6"	1'-9"
BOLT HOOK DIMENSION OR PLATE REQUIREMENT	5"	6"
PLATE WASHER	1/2 x 3 1/4 x 3 1/4 W/1 1/16 HOLE	1/2 x 3 1/2 x 3 1/2 W/1 5/16 HOLE
MINIMUM 'N' FOR BOLT + WASHER	d COL. + 10"	d COL. + 11"
REMARKS		

1. ANCHOR BOLT MATERIAL SHALL BE ASTM F1554 (GRADE 36 U.O.N.)
2. ANCHOR BOLT NUTS SHALL BE DRAWN DOWN TIGHT TO A "SNUG-TIGHTENED" CONDITION. ANCHOR BOLTS DO NOT REQUIRE PRE-TENSIONING.
3. PLATE WASHERS TO CONFORM TO ASTM A36.
4. IF CONTRACTOR PROPOSES TO USE LEVELLING PLATES, HE SHALL SUBMIT HIS PROPOSED METHOD AND DETAILS FOR ENGINEER'S REVIEW AND APPROVAL. THIS MAY RESULT IN A REQUIREMENT TO MILL THE BOTTOM SURFACE OF THE BASE PLATE.
5. ANCHOR BOLT HOLES WHICH ARE FLAME-CUT IN BASE PLATES SHALL BE INSPECTED (AND CORRECTED AS NECESSARY) TO ASSURE PROPER CLEARANCES.

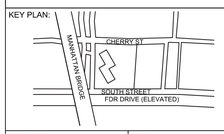

PROJECT NORTH | TRUE NORTH

DEVELOPER:
EXTELL DEVELOPMENT COMPANY
805 Third Ave, 7th Floor
New York, NY 10022
TEL: 212-712-6000 FAX: 212-712-6100

ARCHITECT OF RECORD:
AAI ARCHITECTS, P.C.
14 Wall Street, 2nd Floor
New York, NY 10005
TEL: 212-964-4040 FAX: 212-964-4090

INTERIOR DESIGNER:
MEYER DAVIS
180 Varick St, suite 404
New York, NY 10014
TEL: 212-627-5574

LANDSCAPE DESIGNER:
WEST 8 URBAN DESIGN & LANDSCAPE ARCHITECTURE P.C.
333 Hudson Street, Suite 905
New York, NY 10013
TEL: 212-285-0088 FAX: 212-285-0228

STRUCTURAL ENGINEERS:
WSP
228 East 45th Street
New York, NY 10017
TEL: 212-687-9888 FAX: 646-487-5501

MEP ENGINEERS:
ICOR ASSOCIATES, LLC
485 C Route 1 South, Suite 200
Iselin, NJ 08830
TEL: 908-272-3300 FAX: 908-272-4440

GEOTECHNICAL ENGINEERS:
LANGAN ENGINEERING & ENVIRONMENTAL SERVICES
21 Penn Plaza - 360 West 31st Street, 8th Floor
New York, NY 10001
TEL: 212.479.5400 FAX: 212.479.5444

No.	DESCRIPTION:	DATE:
1	ISSUED FOR FOUNDATION BID	01-09-15
2	ISSUED FOR FILING	02-13-15
3	STEEL BID PACKAGE	02-24-15
4	ISSUED FOR FILING	07-28-15

Discrepancies must be reported immediately to the Architect before proceeding. Only figured dimensions are to be used. Contractors must check all dimensions on site. This drawing is protected by copyright.

ALL DIMENSIONS ARE SHOWN IN IMPERIAL.

CONSULTANT: WSP

PROJECT:
250 SOUTH STREET
NEW YORK, NY

DRAWING TITLE:
TYPICAL STEEL COLUMN DETAILS 1

SEAL & SIGNATURE:
STATE OF NEW YORK · ANMAD RAHMAN · No. 095551 · LICENSED PROFESSIONAL ENGINEER

DATE:	07/25/14
PROJECT No:	1302510
DRAWN: CADD	REV:
CHK: CL	
SCALE: N.T.S.	

DWG No:
S-957.00
DOB PAGE No: 61

DOB EMPLOYEE STAMP:
Damian Titus
BuildTyps
APPROVED
Under Directive 2 of 1975
AMENDED APPLICATION
Date: 10/08/2015
NYC Development Hub

DOB B-SCAN:

FILE NAME:
PLOT DATE:

30" x 42" Arch E1 - SHEET SIZE

DEPT OF BLDGS121180528 Job Number

E59086459191 Scan Code

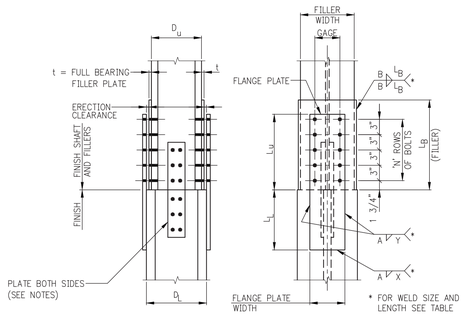

UPPER COLUMN DEPTH NOMINALLY TWO INCHES LESS THAN LOWER COLUMN DEPTH

(FILLERS DEVELOPED FOR BEARING)

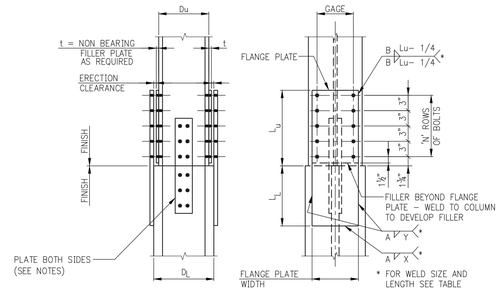

UPPER AND LOWER COLUMNS SAME NOMINAL DEPTH

NOTE:

IF LOWER COLUMN DEPTH D_L IS LESS THAN UPPER COLUMN DEPTH D_U FILLER PLATES ARE TO USED AT LOWER COLUMN – INCREASE WELD SIZE BY THICKNESS OF FILLER PLATE.

COLUMN SPLICES

COLUMN SPLICE REQUIREMENTS:

1. INTERFACE OF UPPER AND LOWER COLUMNS SHALL DEVELOP FULL CAPACITY OF SMALLER COLUMN IN BEARING AND TENSTION LOADS SHOWN ON COLUMN SCHEDULE.
2. FILLER PLATES TO BE SAME GRADE OF STEEL (F_y) AS COLUMNS.
3. FILLER PLATES SHALL DEVELOP THE PORTION OF THE SMALLER COLUMN FLANGE CAPACITY LOST DUE TO NON–ALIGNMENT OF FLANGES WHERE COLUMNS ARE NOT CENTERED OR OF DIFFERENT NOMINAL DEPTH.
4. SHOP DRAWINGS SHALL REQUIRE THAT CENTER PUNCH MARKS BE PLACED ON CENTERLINES OF ALL FACES OF UPPER AND LOWER SHAFTS.
5. CONTRACTOR MAY SUBMIT A PROPOSAL TO PROVIDE ALL–WELDED COLUMN FLANGE – PLATED SPLICES OR DIRECTLY WELDED FLANGE SPLICES, FOR THE ENGINEER'S REVIEW AND APPROVAL.
6. CONTRACTOR MAY SUBMIT A PROPOSAL TO PROVIDE A BUTT PLATE IN LIEU OF BEARING FILLERS AT COLUMNS WITH A DEPTH D–su–S NOMINALLY TWO INCHES LESS THAN DEPTH D–sL–S, FOR THE ENGINEER'S REVIEW AND APPROVAL.
7. COLUMN SPLICES SHALL BE LOCATED 4 FT. OR MORE AWAY FROM THE BEAM–TO–COLUMN CONNECTIONS.

ADDITIONAL REQUIREMENTS AT COLUMN SPLICES IN BRACED FRAMES:

1. COLUMN SPLICES SHALL BE CONNECTED FOR NET TENSION, Pu (KIPS) AS INDICATED ON BRACE FRAME ELEVATIONS OR ON COLUMN SCHEDULE.
2. COLUMN SPLICES SHALL BE LOCATED IN THE MIDDLE ONE–THIRD OF COLUMN CLEAR HEIGHT.
3. COLUMN SPLICE SHEAR CAPACITY SHALL DEVELOP AT LEAST THE NOMINAL SHEAR STRENGTH (ϕV_n) OF THE SMALLER CONNECTED MEMBER, WHERE:
   $\phi V_n = 0.9 \times 0.6 \times F_y \times A_w$ (KIPS)
   $A_w = (d_b - 2t_f) \times t_w$ ($IN.^2$)
   F_y = MIN. YIELD STRESS (KSI)
   d_b, t_f, t_w = DIMENSIONAL SECTION PROPERTIES (IN.)
4. COLUMN SPLICE FLEXURAL CAPACITY SHALL DEVELOP AT LEAST 50 PERCENT OF THE NOMINAL FLEXURAL STRENGTH OF SMALLER CONNECTED MEMBER, WHERE:
   $\phi M_n = 0.9 \times 0.5 \times F_y \times Z$ (KIP–IN)
   F_y = MIN. YIELD STRESS (KSI)
   Z = COLUMN PLASTIC SECTION MODULUS IN DIRECTION PARALLEL TO BRACED FRAME ($IN.^3$)
5. IF WELDS ARE USED IN COLUMN SPLICES RESISTING NET TENSION, THE FOLLOWING ADDITIONAL REQUIREMENTS SHALL BE MET:
   A. GROUPS 3, 4 & 5 SHAPES WITH FLANGES 1 1/2" AND THICKER, PLATES 2" AND THICKER SHALL HAVE MIN. CHARPY V–NOTCH TOUGNESS OF 20 FT–LBS. AT 70° F
   B. CHARPY V–NOTCH TOUGHNESS OF FILLER METAL SHALL BE A MINIMUM OF 20FT–LBF @ MINUS 20°F.
   C. DESIGN STRENGTH OF PARTIAL–JOINT–PENETRATION GROVE WELDS SHALL BE AT LEAST 200 PERCENT OF REQUIRED STRENGTH.

FLANGE PLATES – MINIMUM REQUIREMENTS							
COLUMN FLANGE WIDTH	COLUMN FLANGE THICKNESS tf	FLANGE PLATE MIN. WIDTH	FLANGE PLATE MIN. THICK.	MINIMUM NUMBER OF ROWS OF 7/8"ø SLIP CRITICAL BOLTS 'N'	MINIMUM L_L (LOWER SHAFT)	MINIMUM SIZE OF FILLET WELDS 'A'*	MINIMUM SIZE OF FILLET WELDS 'B'**
6 1/2	–	5	1/2	2	8	1/4	1/4**
8+	–	6	1/2	2	10	1/4*	1/4**
10+	–	8	1/2	2	10	1/4*	1/4**
12+	tf<1.50"	8	5/8	3	12	5/16	5/16
12+	tf>1.50"	10	3/4	4	15	5/16	5/16
14+	–	10	1/2	3	12	5/16	5/16
15+	–	12	5/8	4	12	5/16	5/16
16+	tf<2.50"	12	3/4	4	12	5/16	5/16
16+	tf>2.50"	14	3/4	4	14	3/8	5/16
	–	14	1	5	16	3/8	5/16

DETAIL OF STRIP SHIMS

* (WELD 'A') IF COLUMN FLANGE THICKNESS EXCEEDS 3/4", THE MINIMUM WELD SIZE SHALL BE INCREASED TO 5/16"
** (WELD 'B') IF EITHER THE UPPER COLUMN FLANGE OR THE FILLER PLATE THICKNESS EXCEEDS 3/4", THE MINIMUM WELD SIZE SHALL BE INCREASED TO 5/16"

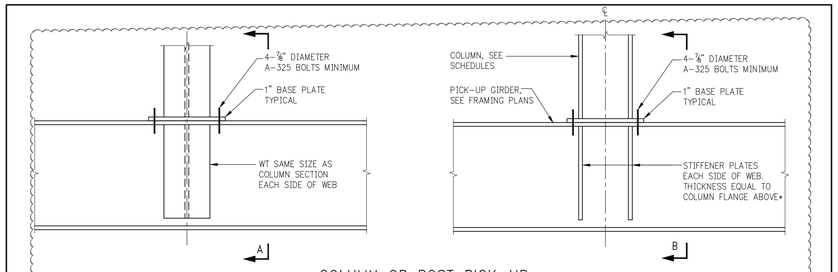

COLUMN OR POST PICK–UP

NOTE:

WT AND STIFFENER PLATES TO BE SAME GRADE OF STEEL AS COLUMN.

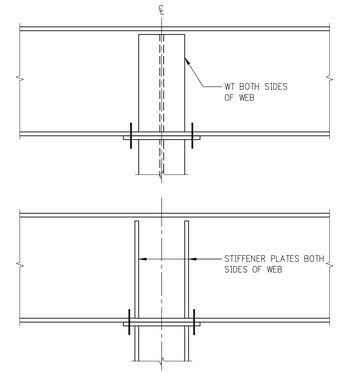

BEAM CONTINUOUS OVER COLUMN

NOTE:

ALL DETAILS OF WT AND STIFFENER PLATES ARE SAME AS FOR COLUMN PICK–UP, BUT INVERTED.

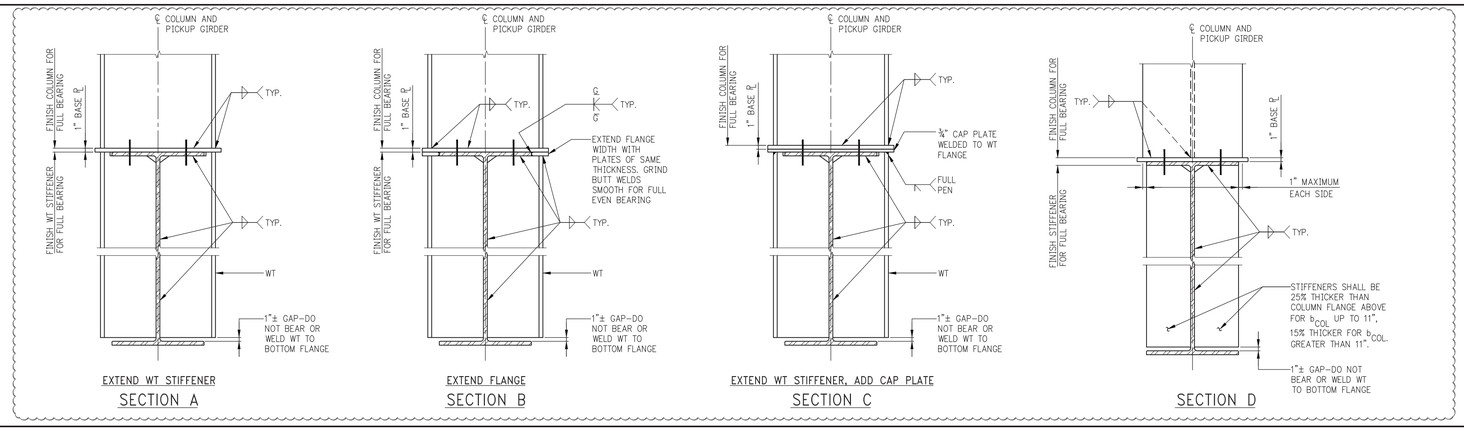

KEY PLAN:

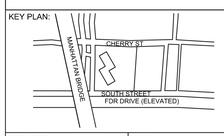

PROJECT NORTH

TRUE NORTH

DEVELOPER:
EXTELL DEVELOPMENT COMPANY
805 Third Ave, 7th Floor
New York, NY 10022
TEL: 212-712-6000 FAX: 212-712-6100

ARCHITECT OF RECORD:
AAI ARCHITECTS, P.C.
14 Wall Street, 2nd Floor
New York, NY 10005
TEL: 212-964-4040 FAX: 212-964-4090

INTERIOR DESIGNER:
MEYER DAVIS
180 Varick St, suite 404
New York, NY 10014
TEL: 212-627-5574

LANDSCAPE DESIGNER:
WEST 8 URBAN DESIGN & LANDSCAPE ARCHITECTURE P.C.
333 Hudson Street, Suite 905
New York, NY 10013
TEL: 212-285-0088 FAX: 212-285-0228

STRUCTURAL ENGINEERS:
WSP
228 East 45th Street
New York, NY 10017
TEL: 212-687-9888 FAX: 646-487-5501

MEP ENGINEERS:
ICOR ASSOCIATES, LLC
485 C Route 1 South, Suite 200
Iselin, NJ 08830
TEL: 908-272-3300 FAX: 908-272-4440

GEOTECHNICAL ENGINEERS:
LANGAN ENGINEERING & ENVIRONMENTAL SERVICES
21 Penn Plaza - 360 West 31st Street, 8th Floor
New York, NY 10001
TEL: 212.479.5400 FAX: 212.479.5444

No.	DESCRIPTION:	DATE:
1	ISSUED FOR FOUNDATION BID	01–07–15
2	ISSUED FOR FILING	02–13–15
3	STEEL BID PACKAGE	02–24–15
4	ADDENDUM #3	03–27–15
5	ISSUED FOR FILING	07–28–15

Discrepancies must be reported immediately to the Architect before proceeding. Only figured dimensions are to be used. Contractors must check all dimensions on site. This drawing is protected by copyright.

ALL DIMENSIONS ARE SHOWN IN IMPERIAL.

CONSULTANT:
WSP

PROJECT:
250 SOUTH STREET
NEW YORK, NY

DRAWING TITLE:
TYPICAL STEEL COLUMN DETAILS 2

SEAL & SIGNATURE:
STATE OF NEW YORK — RICHARD RANDHAWA — No. 085551 — LICENSED PROFESSIONAL ENGINEER

DATE: 07/25/14
PROJECT No: 1302510
DRAWN: CADD REV:
CHK: CL
SCALE: N.T.S.
DWG No: **S-958.01**
DOB PAGE No: of

DOB EMPLOYEE STAMP:
Damian Titus
Buildtype
APPROVED
Under Directive 2 of 1975
AMENDED APPLICATION
Date: 10/08/2015
NYC Development Hub

DOB B-SCAN:

FILE NAME:
PLOT DATE:

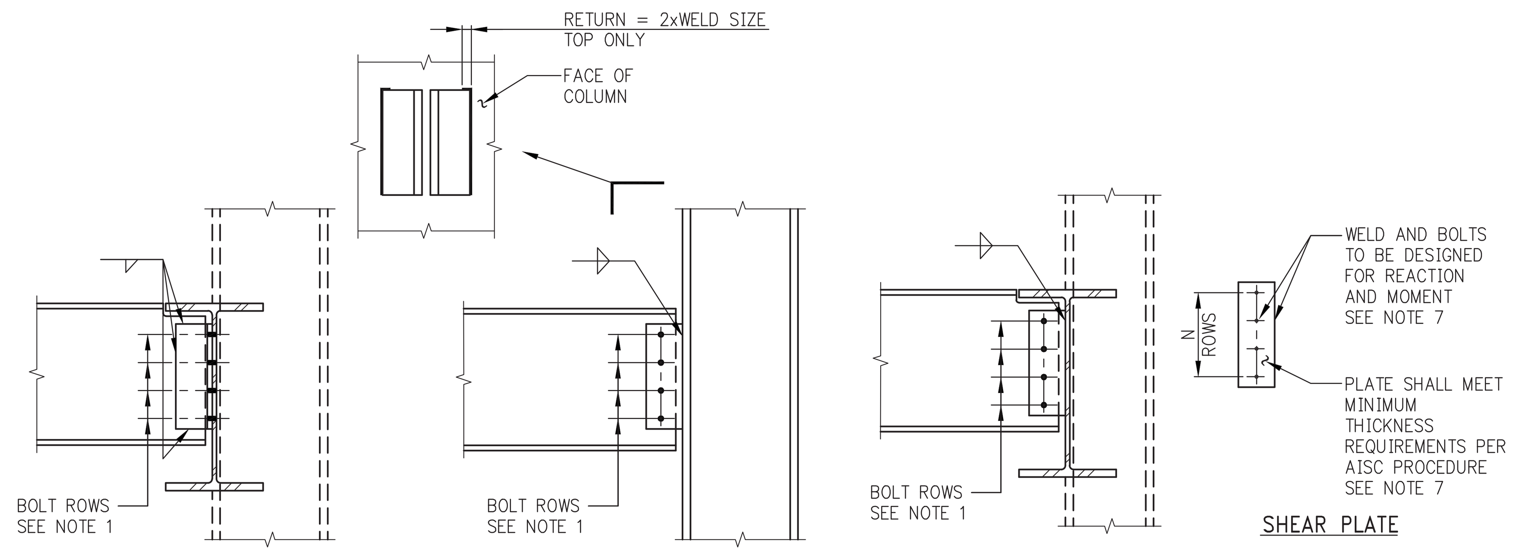

CONNECTION WELDED TO BEAMS
BOLTED TO COLUMN OR GIRDER

CONNECTION BOLTED TO BEAM
WELDED TO COLUMN

CONNECTION BOLTED TO BEAMS
WELDED TO COLUMN OR GIRDER

DOUBLE ANGLE CONNECTIONS TO BEAM OR COLUMN
NOTE: CONNECTION SIMILAR WHEN CONNECTING TO GIRDER OR COLUMN (SHOWN AS DASHED LINE)

SHEAR PLATE CONNECTIONS TO BEAM OR COLUMN
NOTE: CONNECTION SIMILAR WHEN CONNECTING TO GIRDER OR COLUMN (SHOWN AS DASHED LINE)

S I M P L E S H E A R C O N E C T I O N S

(THESE CONNECTIONS MAY BE USED AT TYPE B MOMENT CONNECTIONS. FOR TYPE A MOMENT CONNECTIONS, SEE TYPE A SHEAR CONNECTIONS IN DWG. S-601.)

DESIGN OF SIMPLE SHEAR CONNECTIONS - REQUIREMENTS

1. SIMPLE SHEAR CONNECTIONS SHALL BE DESIGNED FOR THE REACTION SHOWN ON THE DRAWINGS OR THE GREATEST OF THE FOLLOWING:
a) FOR COMPOSITE BEAMS, REACTION FROM AISC LRFD UNIFORM LOAD TABLES FOR BEAMS FOR APPLICABLE BEAM MATERIAL MULTIPLIED BY 2.0.
b) FOR NON-COMPOSITE BEAMS, REACTION FROM AISC LRFD UNIFORM LOAD TABLES FOR BEAMS FOR APPLICABLE BEAM MATERIAL MULTIPLIED BY 1.3
c) MINIMUM NUMBER OF BOLT ROWS AND MINIMUM CONNECTION CAPACITY, SEE TABLE.
d) CONNECTIONS OF BEAMS SHORTER THAN 10'-0" SHALL BE DESIGNED FOR MIN. REACTION IN TABLE B, U.O.N. ON DWGS.
2. IN ADDITION TO THE VERTICAL SHEAR BEAM TO BEAM END CONNECTIONS SHALL BE DESIGNED FOR THE MOST CRITICAL OF THE FOLLOWING:
a) AXIAL LOAD SHOWN ON DRAWINGS (±P) CONCOMITANT WITH THE VERTICAL SHEAR.
b) A DESIGN TENSION STRENGTH EQUAL TO THE LARGER OF THE PROVIDED SHEAR LOAD AT EITHER END BUT NOT LESS THAN 15^{K} (LRFD), U.O.N. THE CONNECTION DESIGN FOR THIS REQUIREMENT SHALL BE IN ACCORDANCE WITH THE PROVISIONS OF N.Y. CITY BUILDING CODE SECTIONS BC 2213.2 ITEM 3.
3. IN ADDITION TO THE VERTICAL SHEAR BEAM TO COLUMNS END CONNECTION SHALL BE DESIGNED FOR THE MOST CRITICAL OF THE FOLLOWING:
a) AXIAL LOAD SHOWN ON DRAWINGS (±P) CONCOMITANT WITH THE VERTICAL SHEAR.
b) A DESIGN TENSION STRENGTH EQUAL TO THE LARGER OF THE PROVIDED SHEAR LOAD AT EITHER END BUT NOT LESS THAN 15^{K} (LRFD), U.O.N. THE CONNECTION DESIGN FOR THIS REQUIREMENT SHALL BE IN ACCORDANCE WITH THE PROVISIONS OF N.Y. CITY BUILDING CODE SECTIONS BC 2213.2 ITEM 3.
4. BOLT TYPE SHALL BE ASTM A 325 (CONTRACTOR MAY USE A490 BOLTS AT HIS OPTION, SUBJECT TO MINIMUM NUMBER OF BOLTS REQUIREMENT).
5. ALL BOLTS SHALL BE FULLY PRETENSIONED.
6. PROVIDE WEB REINFORCING AS REQUIRED DUE TO WEB CUTS, COPES, ETC.
7. DESIGN OF DOUBLE ANGLE AND SHEAR PLATE CONNECTIONS SHALL BE BASED UPON THE LATEST AISC PROCEDURES SHOWN IN THE AISC MANUAL OF STEEL CONSTRUCTION.

TABLE A
MINIMUM NUMBER OF BOLTS FOR SIMPLE SHEAR CONN.

BEAM SIZE	"N"
W8	2
W10	2
W12	3
W14	3
W16	3
W18	4
W21	4
W24	4
W27	5
W30	5
W33	6
W36	6
W40	7
W44	7

"N" = MINIMUM NUMBER OF BOLTS REQUIRED PER CONNECTION. THE TABULATED MINIMUM NUMBER OF BOLTS WILL GENERALLY BE EXCEEDED BY OTHER DESIGN CRITERIA.

TABLE B
MINIMUM CONN. FACTORED LOAD

BEAM SIZE	FACTORED LOAD (K)
W6	15
W8	20
W10	25
W12	25
W14	40
W16	45
W18	45
W21	55
W24	55
W27	65
W30	65
W33	80
W36	80
W40	90
W44	90

TABLE C
MINIMUM FILLET WELDS SIZE

THICKER PART JOINED	MINIMUM FILLET WELD
UP TO 3/4"	1/4"
OVER 3/4"	5/16"

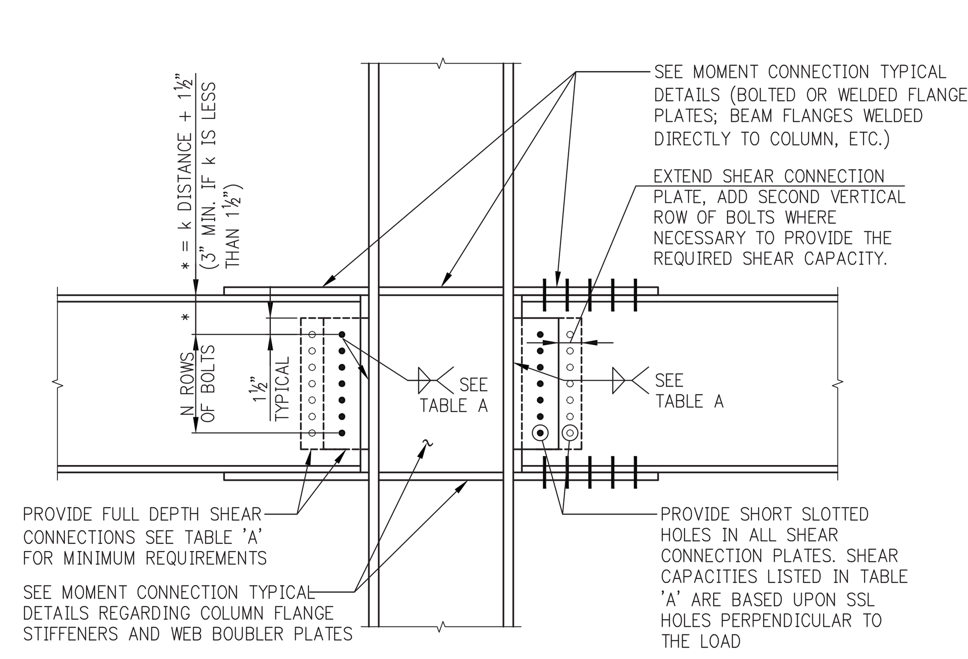

L.L.R.S. SHEAR CONNECTION TO COLUMN FLANGE

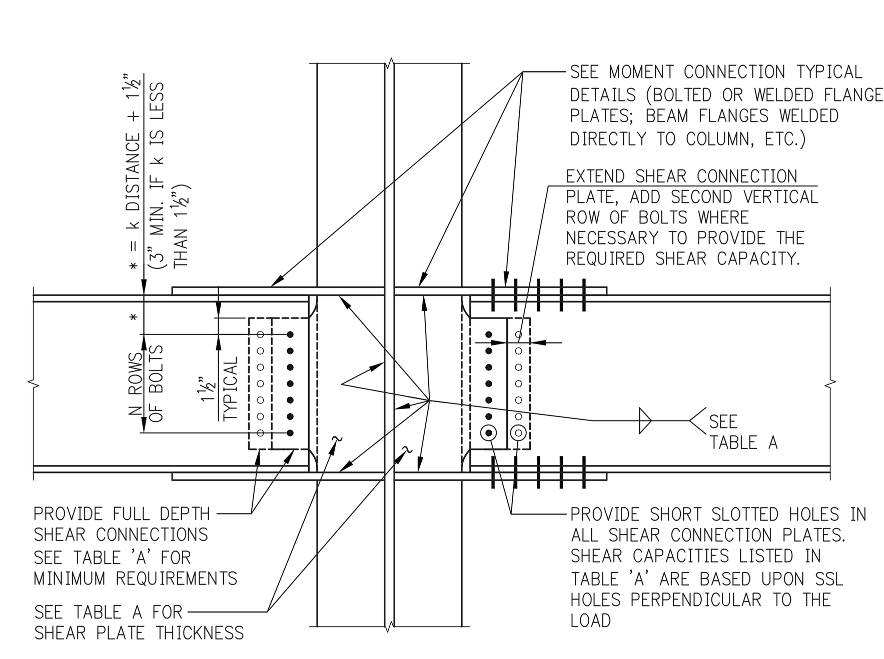

L.L.R.S. SHEAR CONNECTION TO COLUMN WEB

T A B L E A SHEAR CONNECTION REQUIREMENTS FOR TYPE 'A' MOMENT CONNECTIONS					
- PROVIDE FULL DEPTH SINGLE SHEAR PLATE. - PROVIDE MINIMUM WELD SIZE TABULATED. - BOLTS TO BE MINIMUM ⅞" DIAMETER, A325(SC). - PROVIDE 1⅛" DIAMETER A490(SC) BOLTS WHERE ACTUAL GIRDER SHEAR EXCEEDS TABULATED CAPACITY.					
WIND GIRDER DEPTH	NUMBER OF HORIZONTAL ROWS OF BOLTS "N"	MINIMUM SHEAR PLATE THICKNESS		MINIMUM FILLET WELD SIZE (E70XX)	CONNECTION SHEAR CAPACITY (LRFD - KIPS) ⅞"ø A325
		Fy=50	Fy=36		
W12, W14	3	½	⅝	5/16	33
W16	4	½	⅝	5/16	44
W18	5	½	⅝	5/16	56
W21	6	½	⅝	5/16	67
W24	6	½	⅝	5/16	67
W27	7	½	⅝	5/16	78
W30	8	½	⅝	5/16	89
W33	9	½	⅝	5/16	100
W36	10	½	⅝	5/16	111
W40	11	½	⅝	5/16	122
W44	12	½	⅝	5/16	133

L.L.R.S. T Y P E 'A' S H E A R C O N N C T I O N S

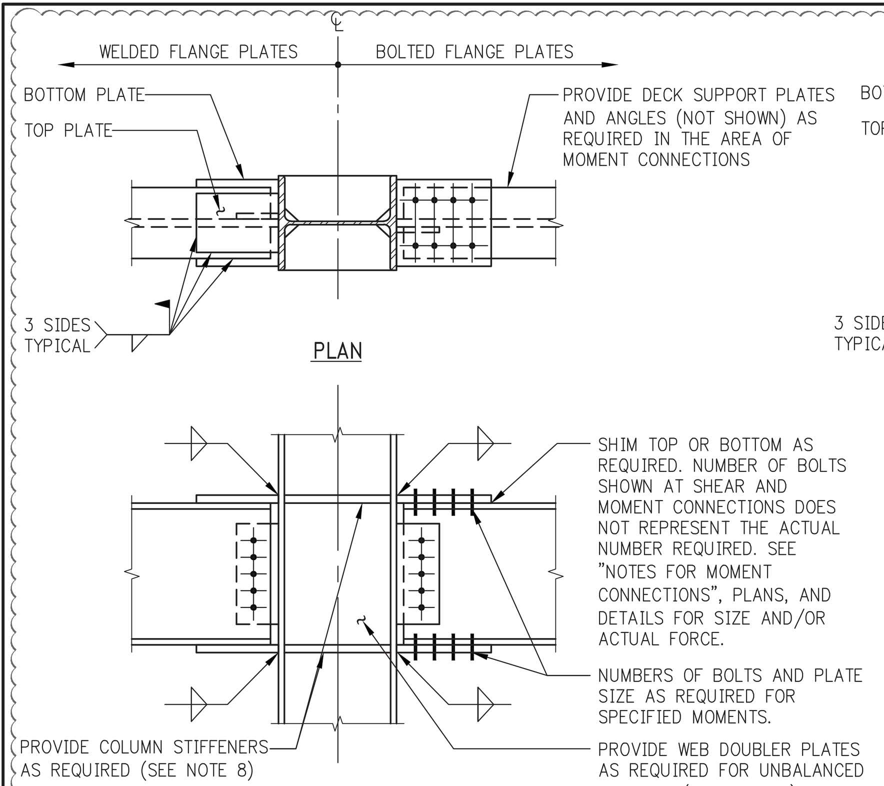

BEAM TO COLUMN FLANGE WITH
BOLTED OR WELDED FLANGE PLATES

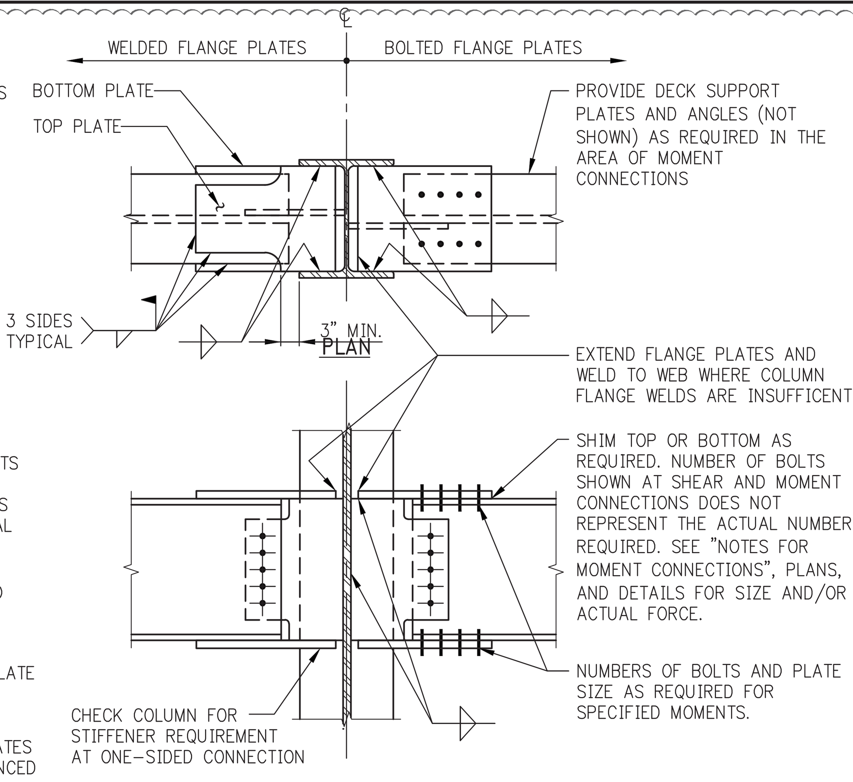

BEAM TO COLUMN WEB WITH
BOLTED OR WELDED FLANGE PLATES

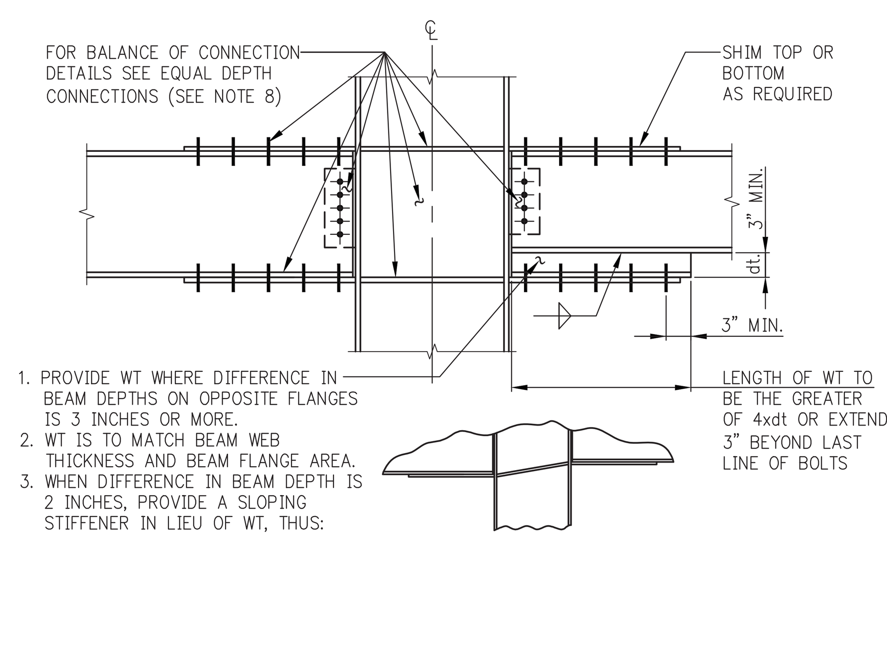

1. PROVIDE WT WHERE DIFFERENCE IN BEAM DEPTHS ON OPPOSITE FLANGES IS 3 INCHES OR MORE.
2. WT IS TO MATCH BEAM WEB THICKNESS AND BEAM FLANGE AREA.
3. WHEN DIFFERENCE IN BEAM DEPTH IS 2 INCHES, PROVIDE A SLOPING STIFFENER IN LIEU OF WT, THUS:

BEAM TO COLUMN FLANGE WITH DIFFERENT BEAM DEPTHS
(BEAM TO COLUMN WEB SIMILAR SEE EQUAL DEPTH CONNECTIONS)

TERMINOLOGY AND LEGEND FOR L.L.R.S. FRAMES

1. "L.L.R.S." MEANS "LATERAL LOAD RESISTING SYSTEM" (USUALLY THIS NOMENCLATURE DOES NOT APPEAR ON FRAMES OR ON INDIVIDUAL MEMBERS).
2. "W.F." IS A WIND/SEISMIC LATERAL LOAD RESISTING FRAME ON THE STRUCTURE'S PERIMETER, INTERIOR, OR CORE. (COLUMNS, GIRDERS, BEAMS, TRUSSES, BRACES, ETC.).
3. "W.G." IS A WIND/SEISMIC GIRDER: AN INDIVIDUAL MEMBER, COMPONENT OF A WIND/SEISMIC L.L.R.S.
4. = A MOMENT CONNECTION, TYPE A OR TYPE B.
OR:
5. MC MC = A MOMENT CONNECTION, TYPE A OR TYPE B.
6. TYPE A MOMENT CONNECTION:
PART OF A LATERAL LOAD RESISTING SYSTEM, THIS CONNECTION HAS THE MOST STRINGENT REQUIREMENTS - IT MUST DEVELOP THE FULL MOMENT CAPACITY OF THE GIRDER AND PROVIDE THE GREATER SHEAR CAPACITY REQUIRED TO RESIST SHEAR FORCES GENERATED BY COMBINED GRAVITY PLUS LATERAL LOADS. (SEE TYPE A SHEAR CONNECTION DETAILS).
7. TYPE B MOMENT CONNECTION:
ALL OTHERS, SUCH AS: CANTILEVERS, STIFFENING OF MEMBERS TO REDUCE DEFLECTIONS, ETC. A DESIGN MOMENT LESS THAN FULL MOMENT CAPACITY MAY BE INDICATED ON THE FRAMING PLANS, IN WHICH CASE THE CONNECTION MAY BE DESIGNED FOR THIS VALUE. IF NO MOMENT IS GIVEN, THE CONNECTION MUST BE DESIGNED FOR FULL MOMENT CAPACITY. (SEE SIMPLE SHEAR CONNECTION DETAILS).

NOTES FOR MOMENT CONNECTIONS

1. *CONNECTIONS FOR ALL MEMBERS DESIGNATED AS PART OF A LATERAL LOAD RESISTING SYSTEM (W.F OR W.G.)SHALL BE TYPE A MOMENT CONNECTIONS (SEE LEGEND FOR DEFINITION AND REQUIREMENTS).
2. * SHEAR CONNECTIONS SHALL CONFORM TO "TABLE A -- SHEAR CONNECTION REQUIREMENTS FOR TYPE A MOMENT CONNECTIONS".
3. ALL OTHER SHEAR CONNECTIONS (INCLUDING THOSE AT TYPE B MOMENT CONNECTIONS) SHALL CONFORM TO "SIMPLE SHEAR CONNECTION DETAILS".
4. WELDS AND BOLTS FOR MOMENT CONNECTIONS SHALL DEVELOP THE FULL MEMBER MOMENT CAPACITY, EXCEPT AT A TYPE B CONNECTION WHERE A LESSER MOMENT VALUE IS INDICATED ON THE FRAMING PLANS. (THIS MAY ONLY BE UTILIZED AT A TYPE B CONNECTION).
5. MOMENT CONNECTION PLATES SHALL BE SIZED AS REQUIRED FOR THE SPECIFIED MOMENT.
6. WELD SMAY BE SUBSTITUTED FOR BOLTS UPON PRIOR APPROVAL OF THE STRUCTURAL ENGINEER.
7. PROVIDE WEB AND/OR FLANGE REINFORCING WHERE REQUIRED DUE TO WEB CUTS OR COPES FOR CONNECTIONS.
8. PER THE PROVISIONS OF CHAPTER J OF THE AISC SPECIFICATIONS, PROVIDE COLUMN FLANGE STIFFENERS WHERE REQUIRED TO RESIST FORCES FROM MOMENT CONNECTIONS. PROVIDE COLUMN WEB DOUBLER PLATES AS REQUIRED FOR UNBALANCED MOMENT. (AT CONTRACTOR'S OPTION A HEAVIER COLUMN MAY BE SUBSTITUTED IN LIEU OF DOUBLER/STIFFENER PLATES, AT NO COST TO THE OWNER.
9. SLIP-CRITICAL BOLTS USED IN ALL MOMENT CONNECTIONS SHALL HAVE A MINIMUM DIAMETER OF 7/8" AND SHALL BE BASED UPON BOLT VALUES GIVEN IN TABLE 7-4, "SLIP-CRITICAL CONNECTIONS", WHERE "SLIP IS A STRENGTH LIMIT-STATE", CLASS A FAYING SURFACE (13TH EDITION OF AISC MANUAL).
10. IF THE FABRICATOR PROPOSES TO USE CLASS B FAYING SURFACE AND GREATER BOLT CAPACITY THAN TABLE 7-4 VALUES, HE MUST SUBMIT HIS PROPOSED DESIGN AND FABRICATION PROCEDURES TO THE ENGINEER FOR PRIOR APPROVAL.
11. *PROVIDE A MINIMUM OF 3/4 INCH DIAMETER SHEAR STUDS AT 12 INCHES ON CENTER ALONG THE FULL LENGTH OF THE TOP FLANGE OF ALL W.F./W.G. MEMBERS. IF FRAMING PLANS CALL FOR A NUMBER OF STUDS GREATER THAN ONE PER FOOT OF LENGTH, PROVIDE THE GREATER NUMBER. *THESE NOTES (NUMBERS 1,2, AND 11) APPLY TO L.L.R.S. FRAMES. BALANCE OF NOTES APPLY TO ALL MOMENT CONNECTIONS, BOTH TYPE A AND TYPE B.

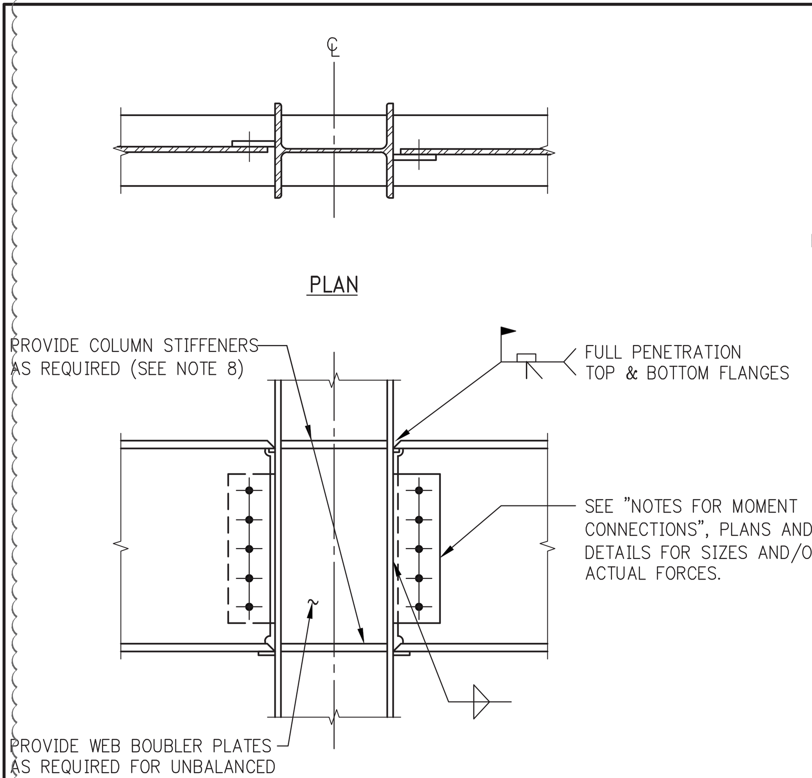

BEAM FLANGES WELDED DIRECTLY
TO COLUMN FLANGES

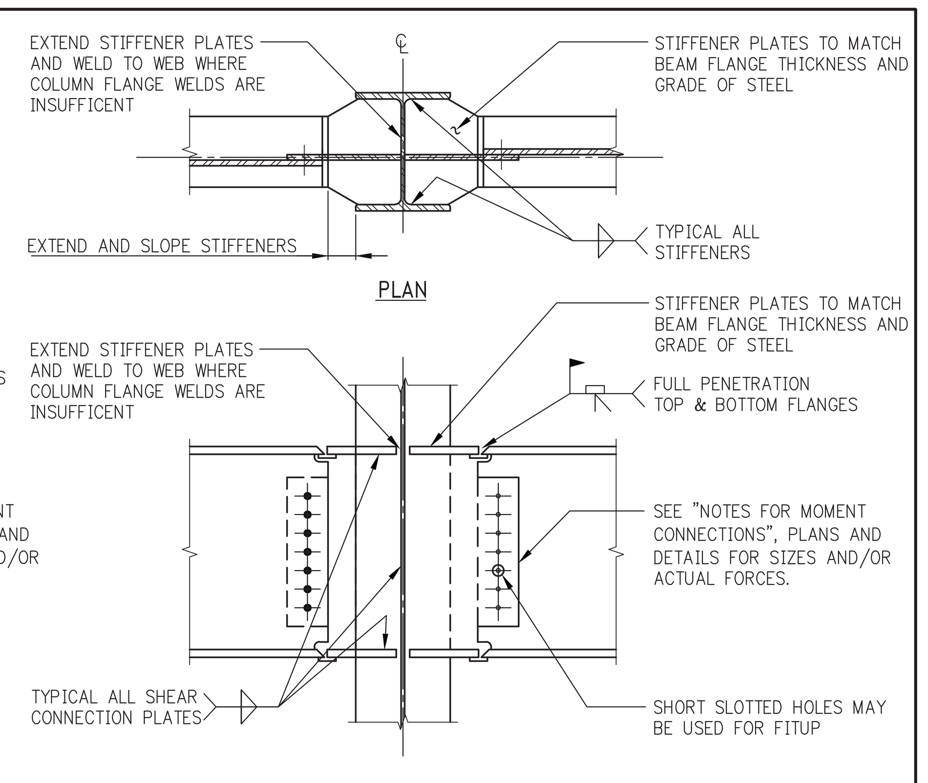

BEAM FLANGES WELDED DIRECTLY
TO COLUMN WEB STIFFENERS

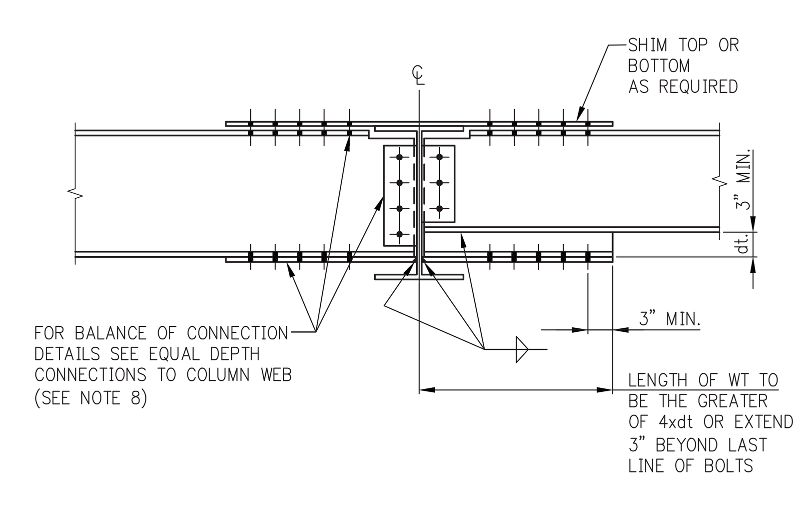

BEAM TO BEAM WITH DIFFERENT DEPTHS

KEY PLAN:

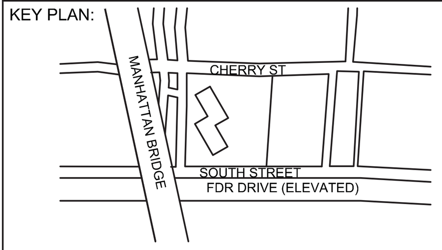

PROJECT NORTH
TRUE NORTH

DEVELOPER:
EXTELL DEVELOPMENT COMPANY
805 Third Ave, 7th Floor
New York, NY 10022
TEL: 212-712-6000 FAX: 212-712-6100

ARCHITECT OF RECORD:
AAI ARCHITECTS, P.C.
14 Wall Street, 2nd Floor
New York, NY 10005
TEL: 212-964-4040 FAX: 212-964-4090

INTERIOR DESIGNER:
MEYER DAVIS
180 Varick St, suite 404
New York, NY 10014
TEL: 212-627-5574

LANDSCAPE DESIGNER:
WEST 8 URBAN DESIGN & LANDSCAPE ARCHITECTURE P.C.
333 Hudson Street, Suite 905
New York, NY 10013
TEL: 212-285-0088 FAX: 212-285-0228

STRUCTURAL ENGINEERS:
WSP
228 East 45th Street
New York, NY 10017
TEL: 212-687-9888 FAX: 646-487-5501

MEP ENGINEERS:
ICOR ASSOCIATES, LLC
485 C Route 1 South, Suite 200
Iseline, NJ 08830
TEL: 908-272-3300 FAX: 908-272-4440

GEOTECHNICAL ENGINEERS:
LANGAN ENGINEERING & ENVIRONMENTAL SERVICES
21 Penn Plaza - 360 West 31st Street, 8th Floor
New York, NY 10001
TEL: 212.479.5400 FAX: 212.479.5444

No.	DESCRIPTION:	DATE:
1	50% DD	08-01-14
2	DESIGN DEVELOPMENT	10-07-14
3	STEEL BID PACKAGE	02-24-15
4	CONCRETE BID PACKAGE	03-06-15
5	ADDENDUM #3	03-27-15
6	ISSUED FOR FILING	07-28-15

Discrepancies must be reported immediately to the Architect before proceeding. Only figured dimensions are to be used. Contractors must check all dimensions on site. This drawing is protected by copyright.

ALL DIMENSIONS ARE SHOWN IN IMPERIAL.

CONSULTANT:
WSP

PROJECT:
250 SOUTH STREET
NEW YORK, NY

DRAWING TITLE:
TYPICAL STEEL SUPERSTRUCTURE DETAILS 1

SEAL & SIGNATURE:

DATE:	07/25/14
PROJECT No:	1302510
DRAWN: CADD	REV:
CHK: CL	
SCALE: N.T.S.	
DWG No:	**S-960.01**
DOB PAGE No:	of

DOB EMPLOYEE STAMP:
Damian Titus
Buildings
APPROVED
Under Directive 2 of 1975
AMENDED APPLICATION
Date: 10/08/2015
NYC Development Hub

DOB B-SCAN:

DEPT OF BLDGS121180528 Job Number
ES706173809 Scan Code
30" x 42" Arch E1 - SHEET SIZE

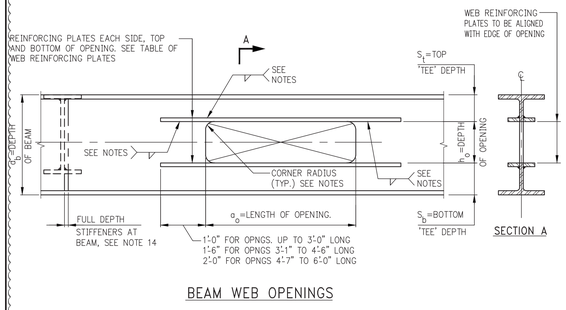

BEAM WEB OPENINGS

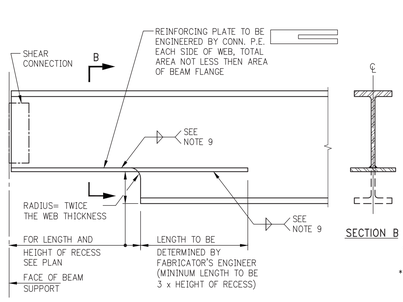

RECESS IN BEAM SOFFIT AT SUPPORT

TABLE OF MINIMUM WEB REINFORCING PLATES		
P_r SIZE- EACH SIDE OF WEB (in x in)	Ar PROVIDED (2 P_r'S) (in^2)	RANGE OF BEAM WEIGHTS FOR USE OF P_r'S
⅜ x 1½	1.13	UP TO 22 #/F
⅜ x 2	1.50	23 THRU 30 #/F
½ x 2	2.00	31 THRU 40 #/F
½ x 2½	2.50	41 THRU 50 #/F
½ x 3	3.00	51 THRU 60 #/F
⅝ x 3	3.75	61 THRU 75 #/F
¾ x 3	4.50	76 THRU 90 #/F
⅞ x 3	5.25	91 THRU 105 #/F
1 x 3	6.00	106 THRU 120 #/F
*1 x 3½	7.00	121 THRU 140 #/F
*1 x 4	8.00	141 THRU 160 #/F
**	**	OVER 160 #/F

* PLATE EXTENSIONS BEYOND WEB OPENING SHALL BE INCREASED BY 33% OVER THOSE SHOWN ON TYPICAL DETAILS.

** PROVIDE SUITABLE PLATE SIZES SUCH THAT COMBINED AREA OF TWO PLATES IS EQUAL IN AREA TO AT LEAST 50% OF FLANGE AREA OF BEAM BEING REINFORCED, UNLESS SPECIFIC REINFORCING PLATE DETAILS ARE SHOWN ON THE DRAWINGS. PLATE EXTENSIONS BEYOND WEB OPENING SHALL BE INCREASED BY 33% OVER THOSE SHOWN ON TYPICAL DETAIL.

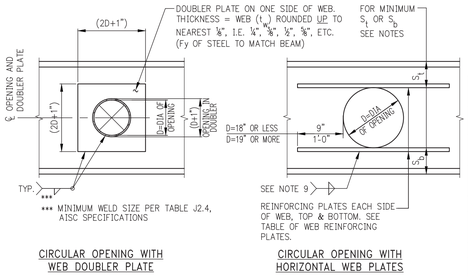

CIRCULAR OPENING WITH WEB DOUBLER PLATE

CIRCULAR OPENING WITH HORIZONTAL WEB PLATES

BEAM WEB CIRCULAR OPENINGS

CIRCULAR OPENINGS– MAXIMUM DIAMETERS OF UNREINFORCED AND REINFORCED OPENINGS			
BEAM SIZE	MAX. HOLE DIA.: UNREINFORCED	MAX. HOLE DIA.: WEB DOUBLER	MAX. HOLE DIA.: HORIZ. WEB P_r'S
W12 (40 #/F & UP) (35 #/F & LESS)	3.0"	4.25"	6.0"
	3.0"	4.75"	6.0"
W14 (43 #/F & UP) (38 #/F & LESS)	3.5"	5.0"	7.0"
	3.5"	5.5"	7.0"
W16	4.0"	6.25"	9.0"
W18	4.5"	7.25"	11.0"
W21	5.0"	8.5"	12.5"
W24	6.0"	10.0"	14.5"
W27	6.5"	11.0"	16.0"
W30	7.5"	13.0"	18.0"
W33	8.0"	14.5"	20.0"
W36	9.0"	15.5"	21.5"
W40	10.0"	16.5"	24.0"
W44	11.0"	18.5"	26.0"

TYPICAL BEAM WEB OPENING NOTES:

1. THE GRADE OF STEEL (Fy) OF ALL REINFORCING PLATES AND WEB DOUBLERS SHALL BE EQUAL TO THE GRADE OF STEEL (Fy) OF THE BEAM BEING REINFORCED.
2. USE THESE DETAILS TO REINFORCE ALL WEB OPENINGS UNLESS OTHER SPECIFIC REINFORCING PLATES ARE CALLED FOR ON THE DRAWINGS.
3. SOME SMALL WEB PENETRATIONS MAY NOT REQUIRE WEB REINFORCING. REINFORCING MAY BE OMITTED ONLY WHEN SPECIFIC DIRECTION IS GIVEN ON THE FRAMING PLAN THAT WEB REINFORCING IS NOT REQUIRED.
4. MAXIMUM h_o = 0.60 d_b FOR W18 AND DEEPER
   = 0.563 d_b FOR W16 (9" OPENING)
   = 0.50 d_b FOR W12 & W14
   (THIS DETAIL DOES NOT APPLY TO BEAMS SHALLOWER THAN 12")
5. MINIMUM S_T OR S_B = 0.20 d_b FOR W18 AND DEEPER
   = 3.5" FOR W16
   = 0.25 d_b FOR W12 & W14.
6. THE MAXIMUMS AND MINIMUMS SHOWN IN NOTES 4 AND 5 DO NOT HAVE TO OCCUR SIMULTANEOUSLY – A SHALLOWER DEPTH OPENING MAY BE SHIFTED UP OR DOWN FROM MID – DEPTH, RESULTING IN A MINIMUM S_T OR S_B.
7. MAXIMUM LENGTH OF OPENING (a_o) IS DEPENDENT UPON S_T OR S_B: a_o 8xS_T OR 8xS_B, WHICHEVER IS SMALLER. MAXIMUM LENGTH OF OPENING SHALL NOT EXCEED 6'-0" REGARDLESS OF BEAM SIZE AND/OR OPENING DEPTH.
8. THE WELD WITHIN THE LENGTH OF THE OPENING SHALL RESIST TWICE THE YIELD STRENGTH ($\phi F_y A_r$) OF THE WEB REINFORCING PLATE, UNLESS OTHERWISE NOTED.
9. THE WELDS IN EACH EXTENSION OF THE WEB REINFORCING PLATE BEYOND THE ENDS OF THE OPENING SHALL DEVELOP THE YIELD STRENGTH OF THE WEB REINFORCING PLATE. MINIMUM WELD SIZE PER TABLE J2.4, AISC SPECIFICATIONS.
10. CORNER RADII SHALL NOT BE LESS THAN TWICE THE THICKNESS OF THE BEAM WEB.
11. THE NEAREST EDGE OF ANY WEB OPENING SHALL BE AT LEAST A DISTANCE d_b FROM A BEAM SUPPORT.
12. TWO ADJACENT WEB OPENINGS SHALL BE SEPARATED BY A MINIMUM DISTANCE BETWEEN EDGES OF OPENINGS EQUAL TO THE LARGER OF THE TWO WEB OPENING LENGTHS.
13. NO CONCENTRATED LOAD SHALL BE LOCATED WITHIN THE LENGTH OF THE WEB OPENING.
14. NO BEAM SHALL BE FRAMED INTO THE BEAM CONTAINING THE WEB OPENING WITHIN A DISTANCE OF d_b/2 FROM THE EDGE OF THE OPENING. ANY BEAM LOCATED BETWEEN A DISTANCE OF d_b/2 AND d_b FROM THE EDGE OF AN OPENING SHALL BE FRAMED TO FULL DEPTH STIFFENERS ON EACH SIDE OF THE WEB.
15. NO BEAM PENETRATIONS WILL BE ALLOWED UNLESS SIZE AND LOCATION ARE SHOWN ON PLAN.

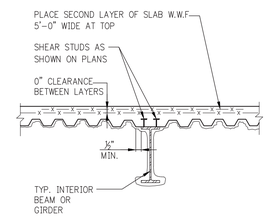

METAL DECK PARALLEL TO FLOOR BEAMS OR GIRDERS

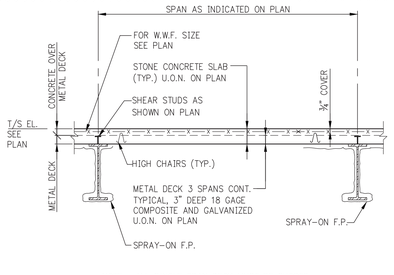

NOTE: ALL SINGLE SPAN DECK MUST BE SHORED.

METAL DECK PERPENDICULAR TO FLOOR BEAMS OR GIRDERS

TYPICAL FLOOR CONSTRUCTION

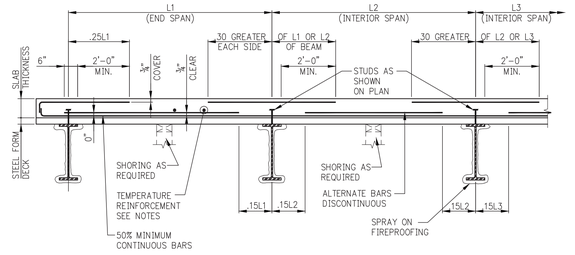

CONCRETE SLAB REINFORCEMENT DETAILS ON STEEL FORM DECK

NOTES:

1. FOR STEEL FORM DECK TYPE, DEPTH, GAGE, YIELD STRESS, PROTECTIVE COATING, ETC. SEE FRAMING PLANS AND NOTES.
2. THESE DETAILS ARE APPLICABLE TO REINFORCED CONCRETE SLAB PLACED ON STEEL FORM DECK SEE PLANS FOR LOCATIONS.
3. SLAB REINFORCEMENT INTERRUPTED BY AN OPENING IN THE SLAB SHALL BE COMPENSATED FOR BY PLACING ONE HALF OF THE REINFORCEMENT TERMINATED ON EACH SIDE OF THE OPENING. REINFORCEMENT SHALL EXTEND FOR FULL LENGTH OF SPAN.
4. PROVIDE 2–#4 TOP AND BOTTOM ADDITIONAL BARS AT ALL FOUR SIDES OF ALL SLAB OPENINGS. LENGTH OF BARS TO BE EQUAL TO OPENING PLUS FIVE FEET.
5. PROVIDE #4@12 TOP REINFORCEMENT OVER ALL STEEL FRAMING MEMBERS (GIRDERS) WHICH ARE PARALLEL TO THE SPAN DIRECTION OF THE SLAB. BARS TO EXTEND 2'–0" FROM EDGE OF GIRDER FLANGE ON EACH SIDE OF GIRDER.
6. HOOK ALL TOP BARS AT DISCONTINUOUS ENDS, I.E. FACE OF CANTILEVERS, EDGE OF SLAB, OPENINGS, ETC.
7. SLAB TEMPERATURE REINFORCEMENT SHALL BE #4@18 FOR SLAB THICKNESS UP TO 6", #4@12 FOR SLAB THICKNESS BETWEEN 6"+ AND 9", #4@9" BETWEEN 9"+ AND 12".

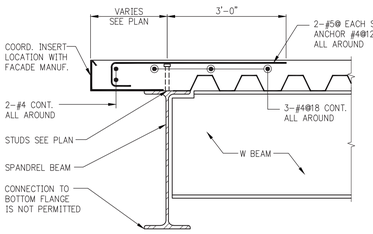

DETAIL #1

(WHERE FACADE ANCHOR IS EMBEDDED INTO SLAB)
(REBAR TO BE COORDINATED WITH INSERT LOCATION)

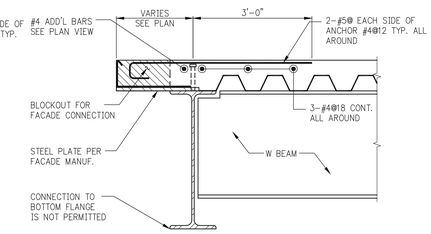

DETAIL #2

(WHERE FACADE ANCHOR IS SET INTO SLAB BLOCKOUT)
(REBAR TO BE COORDINATED WITH BLOCKOUT LOCATION)

DECK SUPPORT AT PERIMETER

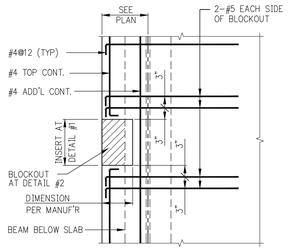

PLAN VIEW AT FACADE ANCHORS

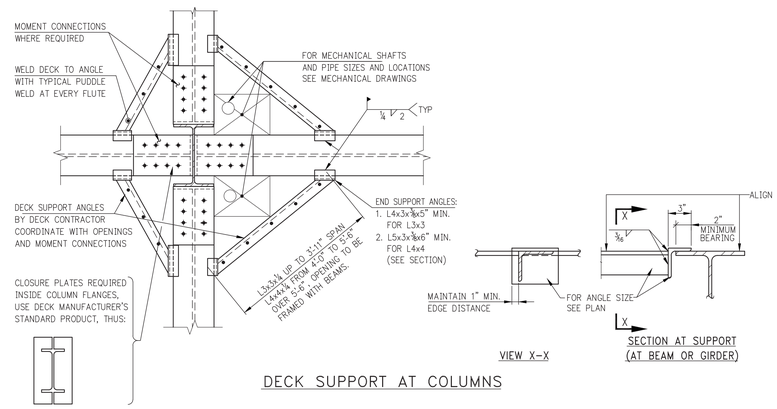

DECK SUPPORT AT COLUMNS

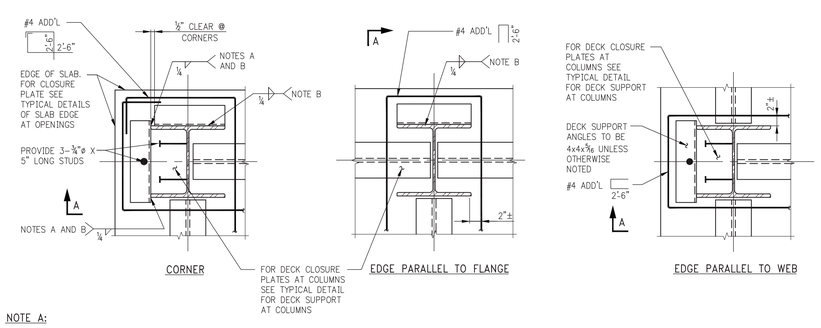

NOTE A:

RETURN WELD AT TOP FOR A DISTANCE EQUAL TO FLANGE THICKNESS

NOTE B:

USE ¾" WELD AT COLUMN FLANGE OVER ¾" THICK

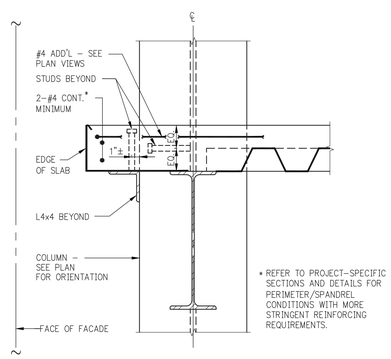

SECTION A

DECK SUPPORT AT PERIMETER COLUMNS

NOTE:

DECK IS NOT SHOWN. SEE FRAMING PLANS FOR SIZE AND DIRECTION OF SPAN.

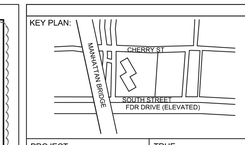

PROJECT NORTH

TRUE NORTH

DEVELOPER:
EXTELL DEVELOPMENT COMPANY
805 Third Ave, 7th Floor
New York, NY 10022
TEL: 212-712-6000 FAX: 212-712-6100

ARCHITECT OF RECORD:
AAI ARCHITECTS, P.C.
14 Wall Street, 2nd Floor
New York, NY 10005
TEL: 212-964-4040 FAX: 212-964-4090

INTERIOR DESIGNER:
MEYER DAVIS
180 Varick St, suite 404
New York, NY 10014
TEL: 212-627-5574

LANDSCAPE DESIGNER:
WEST 8 URBAN DESIGN & LANDSCAPE ARCHITECTURE P.C.
333 Hudson Street, Suite 905
New York, NY 10013
TEL: 212-285-0088 FAX: 212-285-0228

STRUCTURAL ENGINEERS:
WSP
228 East 45th Street
New York, NY 10017
TEL: 212-687-9888 FAX: 646-487-5501

MEP ENGINEERS:
ICOR ASSOCIATES, LLC
485 C Route 1 South, Suite 200
Iselin, NJ 08830
TEL: 908-272-3300 FAX: 908-272-4440

GEOTECHNICAL ENGINEERS:
LANGAN ENGINEERING & ENVIRONMENTAL SERVICES
21 Penn Plaza - 360 West 31st Street, 8th Floor
New York, NY 10001
TEL: 212.479.5400 FAX: 212.479.5444

No.	DESCRIPTION:	DATE:
1	50% DD	08–01–14
2	DESIGN DEVELOPMENT	10–07–14
3	STEEL BID PACKAGE	02–24–15
4	CONCRETE BID PACKAGE	03–06–15
5	ADDENDUM #3	03–27–15
6	ISSUED FOR FILING	07–28–15

Discrepancies must be reported immediately to the Architect before proceeding. Only figured dimensions are to be used. Contractors must check all dimensions on site. This drawing is protected by copyright.

ALL DIMENSIONS ARE SHOWN IN IMPERIAL.

CONSULTANT:
WSP

PROJECT:
250 SOUTH STREET
NEW YORK, NY

DRAWING TITLE:
TYPICAL STEEL SUPERSTRUCTURE DETAILS 2

SEAL & SIGNATURE:
STATE OF NEW YORK · AHMAD RAHIMIAN · No. 085527 · LICENSED PROFESSIONAL ENGINEER

DATE:	07/25/14
PROJECT No:	1302510
DRAWN: CADD	REV:
CHK: CL	
SCALE: N.T.S.	
DWG No:	**S-961.01**
DOB PAGE No:	of

DOB EMPLOYEE STAMP:
Damian Titus
NYC Buildings
APPROVED
Under Directive 2 of 1975
AMENDED APPLICATION
Date: 10/08/2015
NYC Development Hub

DOB B-SCAN:

FILE NAME:
PLOT DATE:

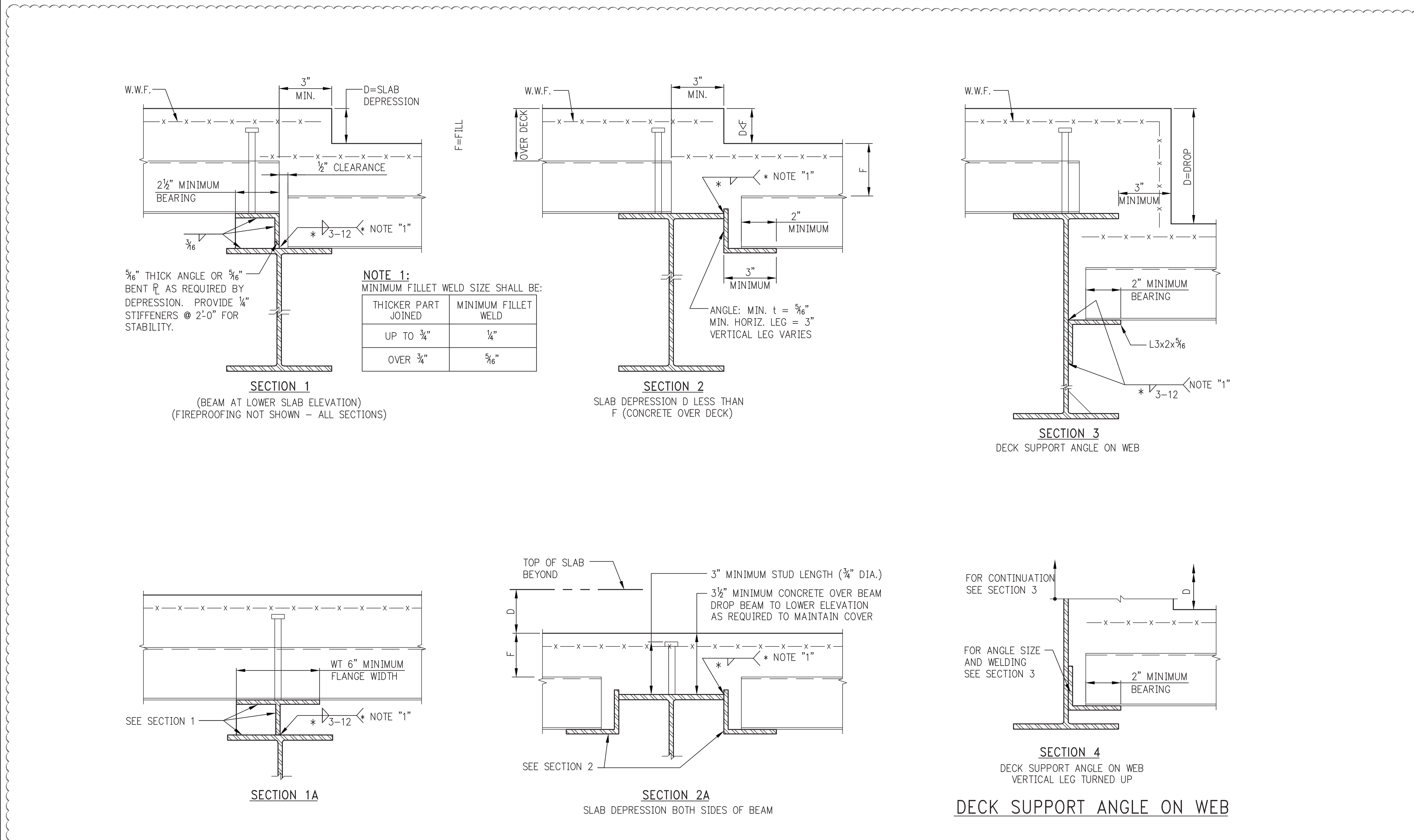

NOTE 1:
MINIMUM FILLET WELD SIZE SHALL BE:

THICKER PART JOINED	MINIMUM FILLET WELD
UP TO ¾"	¼"
OVER ¾"	5/16"

SLAB DEPRESSIONS ON STEEL DECK

NOTES:

1. OPENINGS WHICH ARE DETERMINED BY THE CONTRACTOR TO BE REQUIRED BY JOB CONDITIONS, BUT WHICH ARE NOT SHOWN ON THE STRUCTURAL DRAWINGS, SHALL BE SUBMITTED TO THE ARCHITECT AND STRUCTURAL ENGINEER FOR REVIEW AND APPROVAL.
2. BLOCK OUT OPENING ON TOP OF DECK AND RIBS.
3. DECK IS NOT TO BE CUT WHEN OPENINGS ARE BLOCKED OUT.
4. PLACE REINFORCING BARS IN CONTINUOUS RIBS IMMEDIATELY ADJACENT TO OPENING AND IN TOPPING SLAB PERPENDICULAR TO RIBS.
5. WHEN RIBS ARE SPACED AT 12" OR 8" ON CENTER, REINFORCING REQUIRED = 2–#4 FOR EACH RIB PARTIALLY OR FULLY CUT, PLACE ONE HALF OF REBARS ON EACH SIDE OF OPENING, 2 BARS MAXIMUM PER RIB.
6. WHEN RIBS ARE SPACED AT 6" ON CENTER, REINFORCING REQUIRED = 1–#4 (MINIMUM) FOR EACH RIB PARTIALLY OR FULLY CUT. ADD 1–#4 IF AN ODD NUMBER OF RIBS IS CUT, PLACE ONE HALF OF REBARS ON EACH SIDE OF OPENING, ONE BAR PER RIB.
7. PROVIDE ADEQUATE CHAIRS AND SPACERS TO HOLD REBAR SECURELY IN PLACE DURING PLACEMENT OF CONCRETE.
8. AFTER CONCRETE HAS BEEN PLACED AND HAS ATTAINED AT LEAST 70 PERCENT OF ITS DESIGN STRENGTH, THE BLOCKOUTS MAY BE REMOVED AND THE STEEL DECK MAY BE BURNED OUT AT THE EDGES OF THE OPENING.
9. FOR HOLES UP TO 6" DIAMETER OR 6"x6", REINFORCING WILL NOT BE REQUIRED.

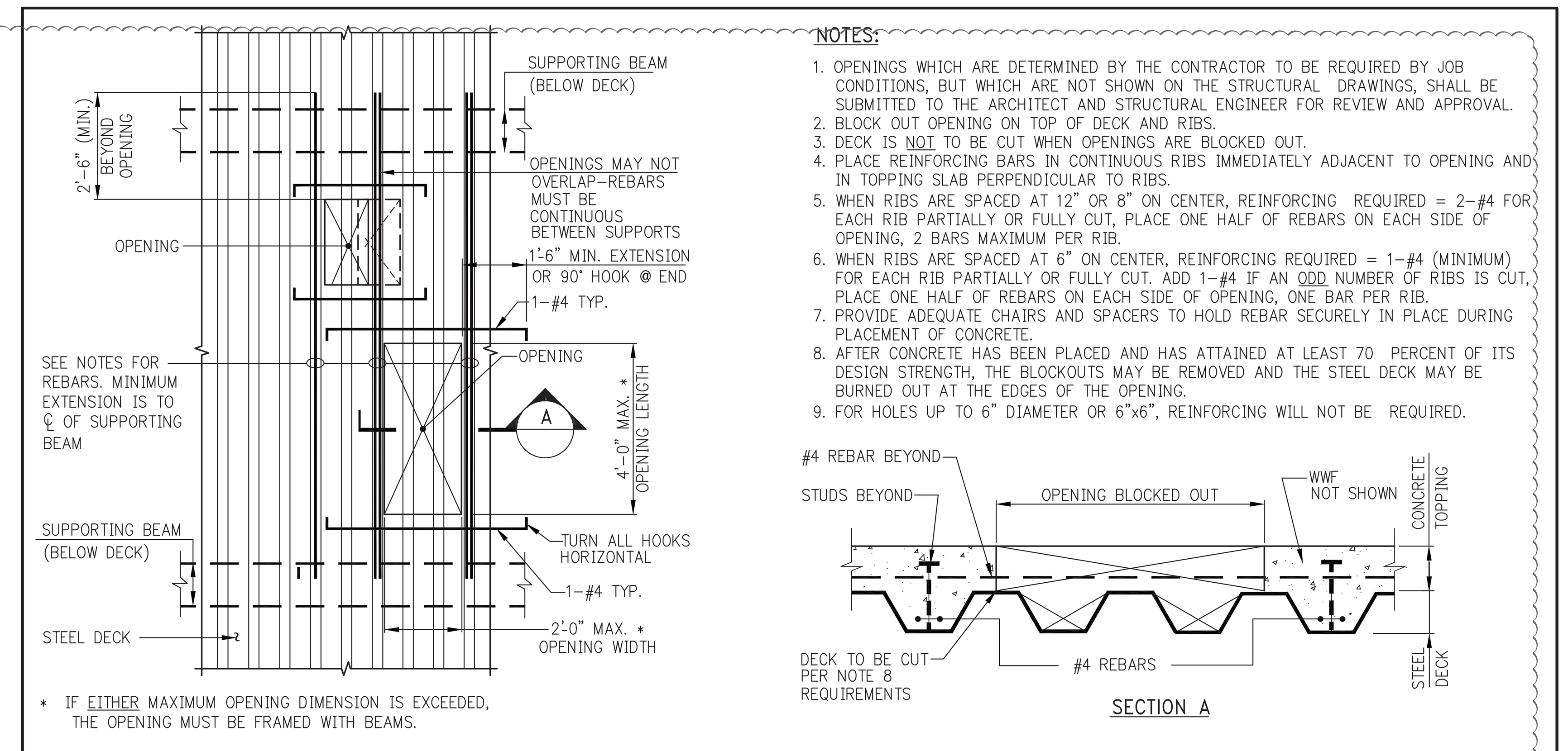

* IF EITHER MAXIMUM OPENING DIMENSION IS EXCEEDED, THE OPENING MUST BE FRAMED WITH BEAMS.

OPENING IN COMPOSITE SLAB

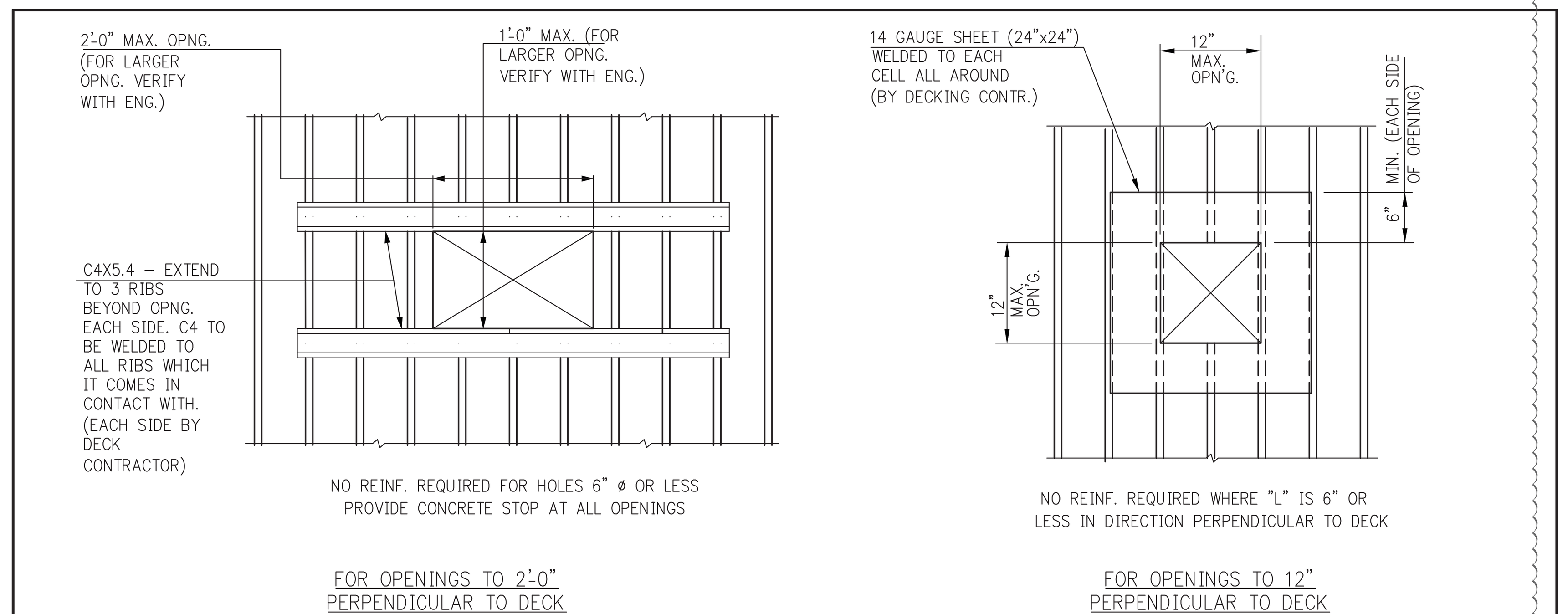

TYPICAL FLOOR DETAILS AT OPENINGS

NOTES:
1. FOR OPENING SIZE & LOC. SEE ARCH. & MEP DWG'S.
2. SPACING BETWEEN FLOOR OPENINGS SHOWN TO BE 3'-0" MIN. U.O.N.

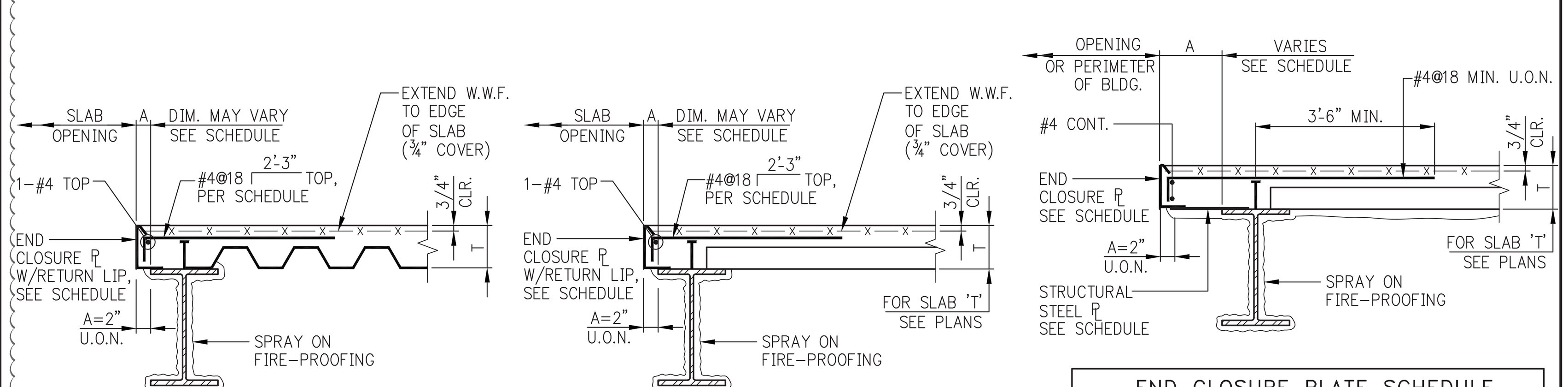

TYPICAL DETAILS OF SLAB EDGE AT OPENING

NOTES:
1. CLOSURE TO BEAR 2" ON FLANGE OF BEAM
2. WELD CLOSURE TO TOP FLANGE PER MANUFACTURER'S RECOMMENDATIONS.
3. PROVIDE RETURN LIP AT ALL VERTICAL LEGS, 1" FOR 10 GAGE, ¾" FOR 12 GAGE, ½" FOR 14 GAGE.
4. IF "A" EXCEEDS DIMENSIONS SHOWN ABOVE, REINFORCE POUR STOP WITH STIFFENERS OR SHORE UP THE EDGE OF SLAB DURING POUR.

END CLOSURE PLATE SCHEDULE

T= UP TO AND INCLUDING 6¼"		T= OVER 6¼", UP TO AND INCLUDING 9"	
A	GAGE OF PLATE	A	GAGE OF PLATE
UP TO 4"	14	UP TO 4"	12
OVER 4" TO 8"	12	OVER 4" TO 8"	10
OVER 8" TO 10"	10	OVER 8" TO 12"	¼" THICK PL
10" TO 14"	3/16"	OVER 12" TO 15"	⅜" THICK PL
14" TO 18"	1/4"		

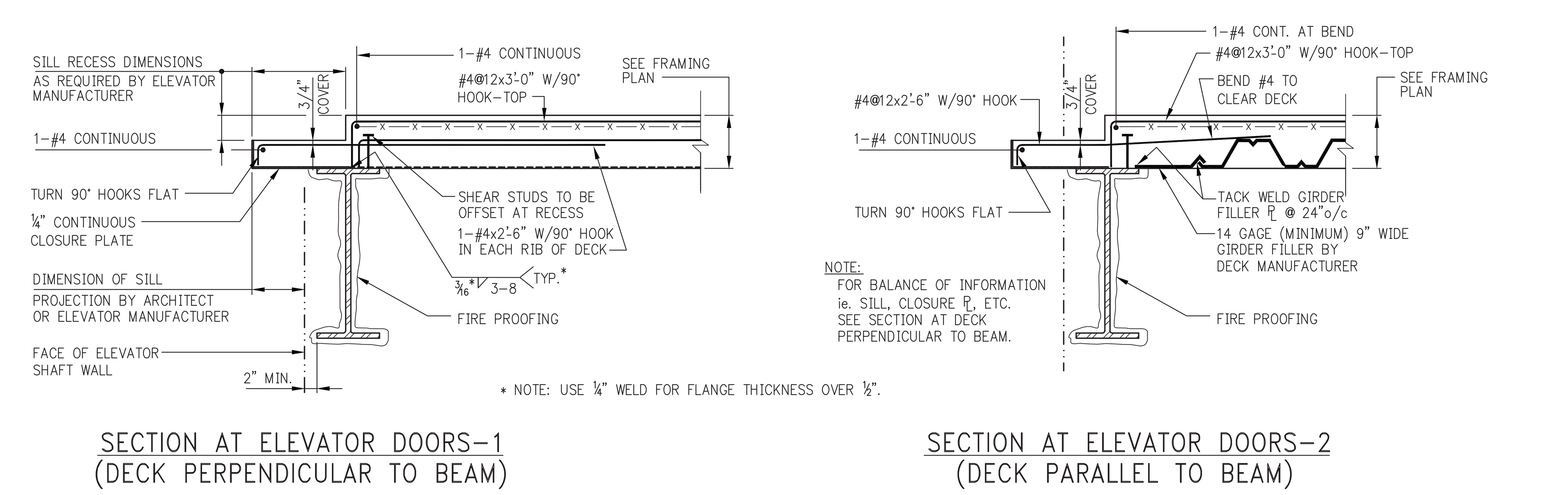

* NOTE: USE ¼" WELD FOR FLANGE THICKNESS OVER ½".

NOTE:
FOR BALANCE OF INFORMATION ie. SILL, CLOSURE PL, ETC. SEE SECTION AT DECK PERPENDICULAR TO BEAM.

ELEVATOR SILL RECESS

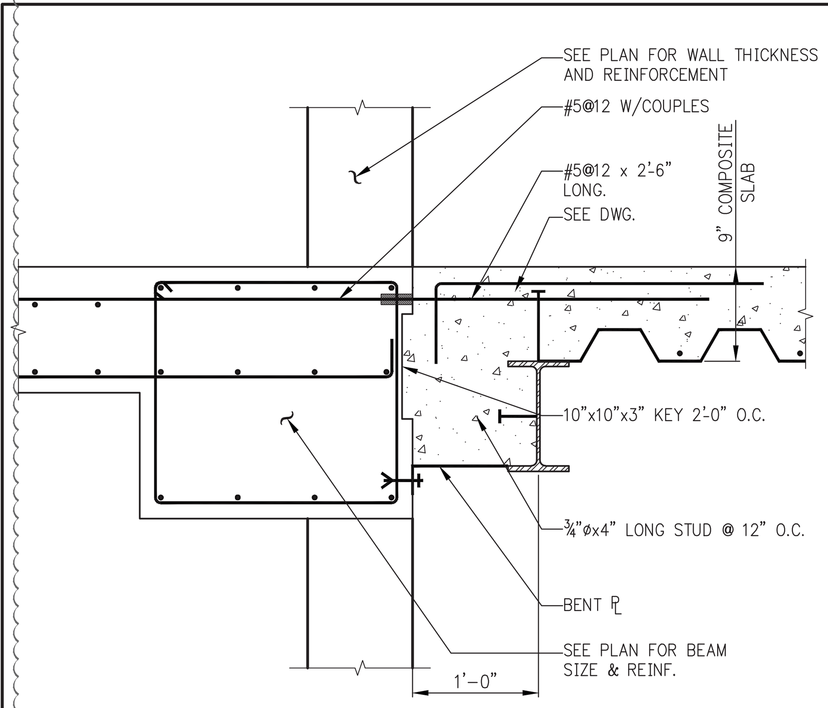

TYPICAL DETAIL-CONCRETE SLAB/CONCRETE WALL TO COMPOSITE SLAB CONNECTION

SCALE: 1"= 1'-0"

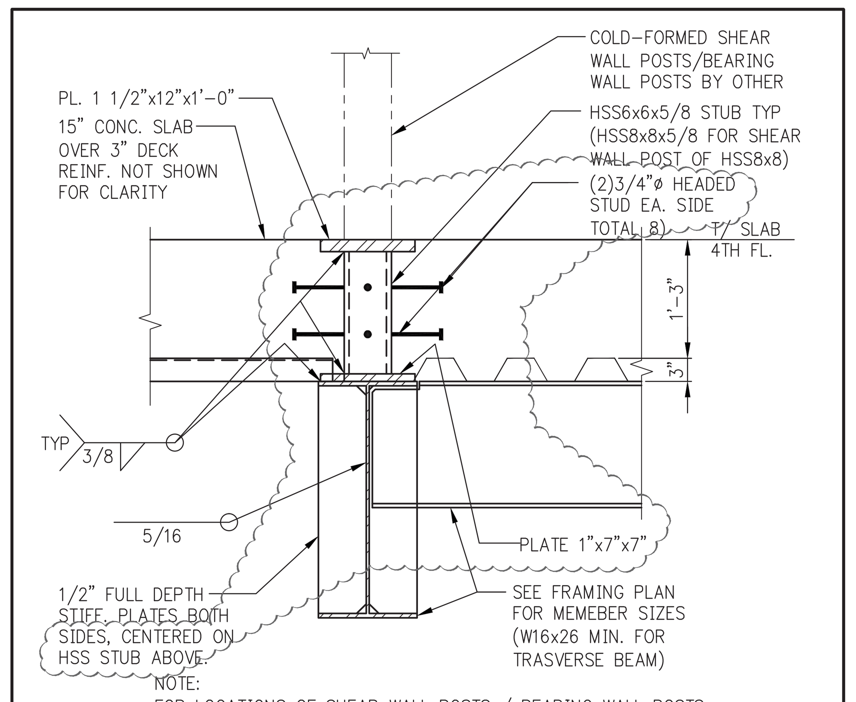

NOTE:
FOR LOCATIONS OF SHEAR WALL POSTS / BEARING WALL POSTS REFER TO S-201 THRU S-204 BY SPECIALTY ENGINEERS.

TYPICAL DETAIL FOR STEEL BEAM SUPPORTING SHEAR WALL POSTS/ BEARING WALL POSTS

SCALE: 3/4" = 1'-0"

KEY PLAN:

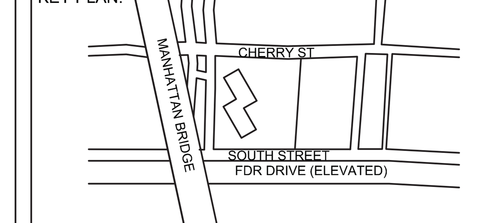

PROJECT NORTH | TRUE NORTH

DEVELOPER:
EXTELL DEVELOPMENT COMPANY
805 Third Ave, 7th Floor
New York, NY 10022
TEL: 212-712-6000 FAX: 212-712-6100

ARCHITECT OF RECORD:
AAI ARCHITECTS, P.C.
14 Wall Street, 2nd Floor
New York, NY 10005
TEL: 212-964-4040 FAX: 212-964-4090

INTERIOR DESIGNER:
MEYER DAVIS
180 Varick St, suite 404
New York, NY 10014
TEL: 212-627-5574

LANDSCAPE DESIGNER:
WEST 8 URBAN DESIGN & LANDSCAPE ARCHITECTURE P.C.
333 Hudson Street, Suite 905
New York, NY 10013
TEL: 212-285-0088 FAX: 212-285-0228

STRUCTURAL ENGINEERS:
WSP
228 East 45th Street
New York, NY 10017
TEL: 212-687-9888 FAX: 646-487-5501

MEP ENGINEERS:
ICOR ASSOCIATES, LLC
485 C Route 1 South, Suite 200
Iseline, NJ 08830
TEL: 908-272-3300 FAX: 908-272-4440

GEOTECHNICAL ENGINEERS:
LANGAN ENGINEERING & ENVIRONMENTAL SERVICES
21 Penn Plaza - 360 West 31st Street, 8th Floor
New York, NY 10001
TEL: 212.479.5400 FAX: 212.479.5444

No.	DESCRIPTION:	DATE:
1	50% DD	08-01-14
2	DESIGN DEVELOPMENT	10-07-14
3	STEEL BID PACKAGE	02-24-15
4	ADDENDUM #3	03-27-15
5	ADDENDUM #10	07-22-15
6	ISSUED FOR FILING	07-28-15

Discrepancies must be reported immediately to the Architect before proceeding. Only figured dimensions are to be used. Contractors must check all dimensions on site. This drawing is protected by copyright.

ALL DIMENSIONS ARE SHOWN IN IMPERIAL.

CONSULTANT:
WSP

PROJECT:
250 SOUTH STREET
NEW YORK, NY

DRAWING TITLE:
TYPICAL STEEL SUPERSTRUCTURE DETAILS 3

SEAL & SIGNATURE:

DATE:	07/25/14
PROJECT No:	1302510
DRAWN: CADD	REV:
CHK:	CL
SCALE:	N.T.S.
DWG No:	**S-962.01**
DOB PAGE No:	of

DOB EMPLOYEE STAMP: | DOB B-SCAN:

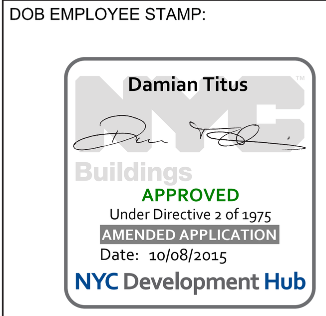

DEPT OF BLDGS121185569 Job Number
IES0922229 Scan Code
30" x 42" Arch E1 - SHEET SIZE

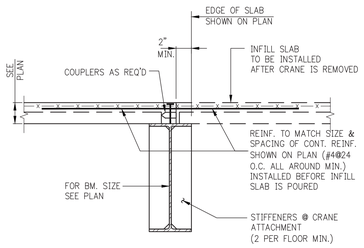

TYPICAL DETAIL AT TOWER CRANE OPENING/ TEMPORARY OPENING

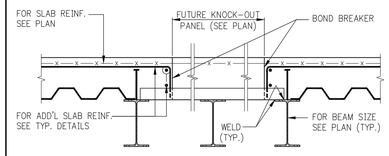

TYPICAL KNOCK OUT SLAB DETAIL

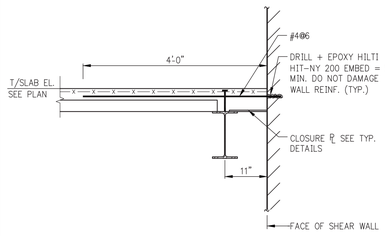

TYPICAL RING BEAM DETAIL

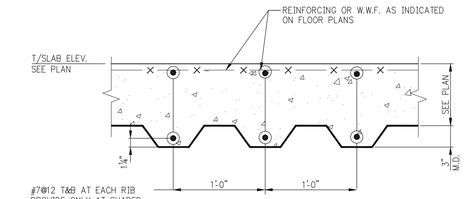

TYPICAL SLAB DETAIL WHERE LIVE LOAD + SUPER IMPOSED DEAD > 400 PSF

NOTES:
1. FOR LOCATION OF ADDITIONAL SLAB REINFORCING SEE PLAN.
2. REINFORCING SHALL BE DEVELOPED 5'-0" BEYOND THE NEAREST BEAMS SHOWN OUTSIDE THE SHADED AREAS ON PLAN.

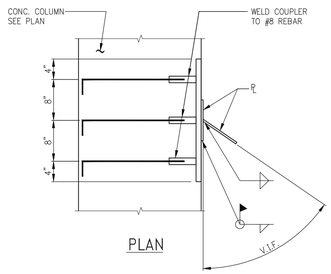

PLAN

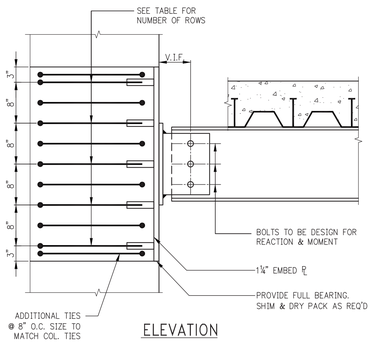

ELEVATION

TYPE	ROW
TE1	4
TE2	5
TE3	6
TE4	7

TYPICAL DETAIL STEEL BEAM TO CONCRETE COLUMN CONNECTION
SCALE: 1"= 1'-0"

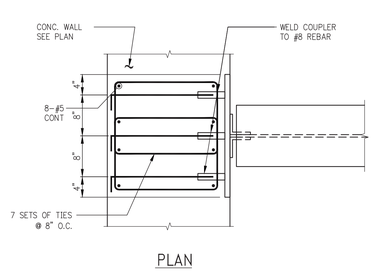

PLAN

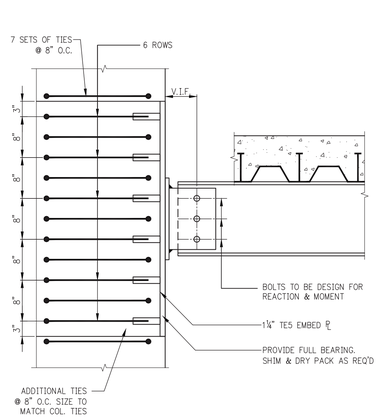

ELEVATION

TYPICAL DETAIL STEEL BEAM TO CONCRETE WALL CONNECTION
SCALE: 1"= 1'-0"

KEY PLAN:

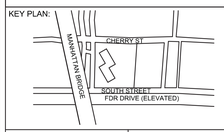

PROJECT NORTH | TRUE NORTH

DEVELOPER:
EXTELL DEVELOPMENT COMPANY
805 Third Ave, 7th Floor
New York, NY 10022
TEL: 212-712-6000 FAX: 212-712-6100

ARCHITECT OF RECORD:
AAI ARCHITECTS, P.C.
14 Wall Street, 2nd Floor
New York, NY 10005
TEL: 212-964-4040 FAX: 212-964-4090

INTERIOR DESIGNER:
MEYER DAVIS
180 Varick St, suite 404
New York, NY 10014
TEL: 212-627-5574

LANDSCAPE DESIGNER:
WEST 8 URBAN DESIGN & LANDSCAPE ARCHITECTURE P.C.
333 Hudson Street, Suite 905
New York, NY 10013
TEL: 212-285-0088 FAX: 212-285-0228

STRUCTURAL ENGINEERS:
WSP
228 East 45th Street
New York, NY 10017
TEL: 212-687-9888 FAX: 646-487-5501

MEP ENGINEERS:
ICOR ASSOCIATES, LLC
485 C Route 1 South, Suite 200
Iseline, NJ 08830
TEL: 908-272-3300 FAX: 908-272-4440

GEOTECHNICAL ENGINEERS:
LANGAN ENGINEERING & ENVIRONMENTAL SERVICES
21 Penn Plaza - 360 West 31st Street, 8th Floor
New York, NY 10001
TEL: 212.479.5400 FAX: 212.479.5444

No.	DESCRIPTION:	DATE:
1	50% DD	08-01-14
2	DESIGN DEVELOPMENT	10-07-14
3	ADDENDUM #3	03-27-15
4	50% CONSTRUCTION DOCUMENTS	04-08-15
5	ADDENDUM #10	07-22-15
6	ISSUED FOR FILING	07-28-15

Discrepancies must be reported immediately to the Architect before proceeding. Only figured dimensions are to be used. Contractors must check all dimensions on site. This drawing is protected by copyright.

ALL DIMENSIONS ARE SHOWN IN IMPERIAL.

CONSULTANT: WSP

PROJECT:
250 SOUTH STREET
NEW YORK, NY

DRAWING TITLE:
TYPICAL STEEL SUPERSTRUCTURE DETAILS 4

SEAL & SIGNATURE:
STATE OF NEW YORK · HUMAD RAHMAN · No. 065027 · LICENSED PROFESSIONAL ENGINEER

DATE:	07/25/14
PROJECT No:	1302510
DRAWN: CADD	REV:
CHK: CL	
SCALE: N.T.S.	
DWG No:	S-963.00
DOB PAGE No:	of

DOB EMPLOYEE STAMP:
Damian Titus
Buildings
APPROVED
Under Directive 2 of 1975
AMENDED APPLICATION
Date: 10/08/2015
NYC Development Hub

DOB B-SCAN:

FILE NAME:
PLOT DATE:

DEPT OF BLDGS121105028 Job Number
E1582743025? Scan Code
30" x 42" Arch E1 - SHEET SIZE

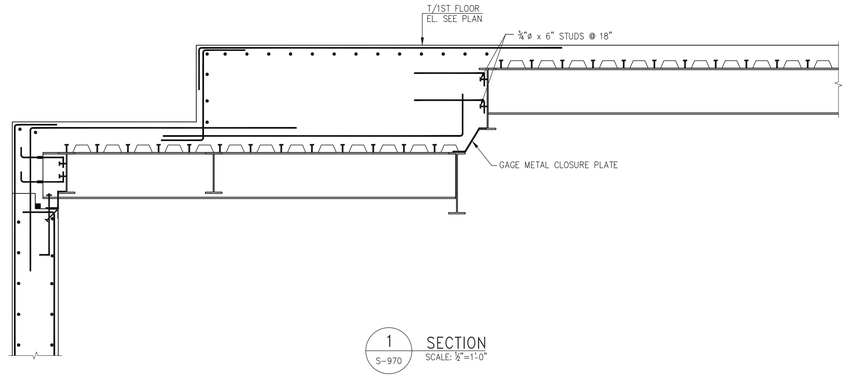

1 S-970 SECTION
SCALE: ½"=1'-0"

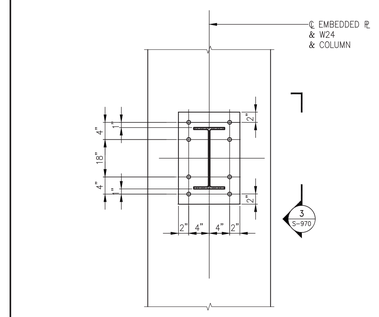

3 S-970 W24 BRACKET CONNECTION DETAIL
SCALE: 1"=1'-0"

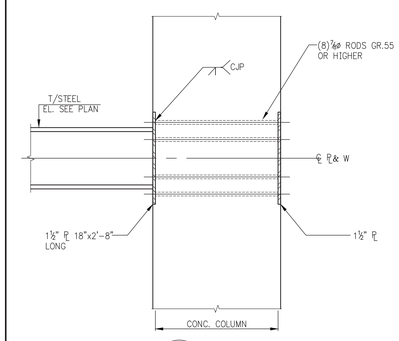

4 S-970 SECTION
SCALE: 1"=1'-0"

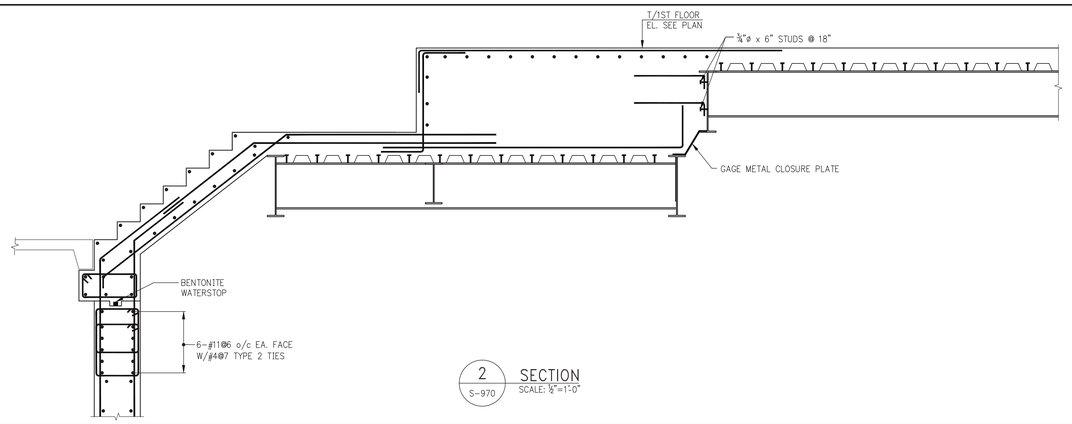

2 S-970 SECTION
SCALE: ½"=1'-0"

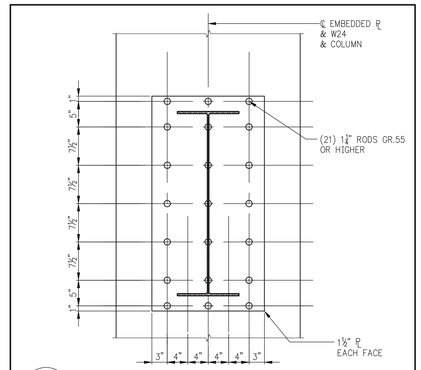

5 S-970 W36 BRACKET/BEAM CONNECTION DETAIL
SCALE: 1"=1'-0"

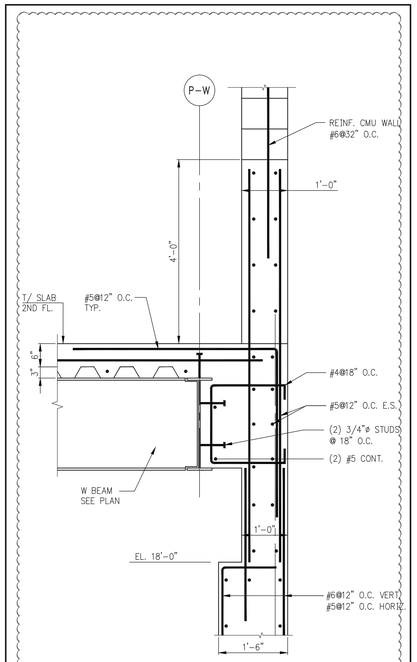

10 S-970 SECTION
SCALE: 3/4" = 1'-0"

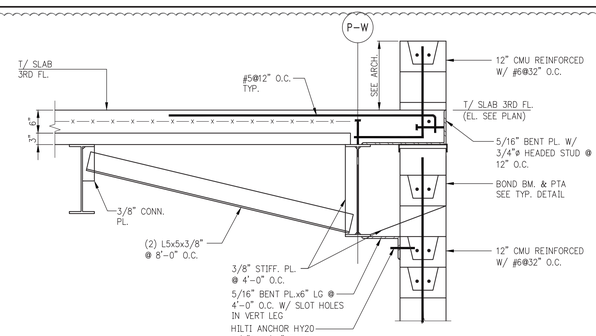

6 S-970 SECTION
SCALE: 3/4" = 1'-0"

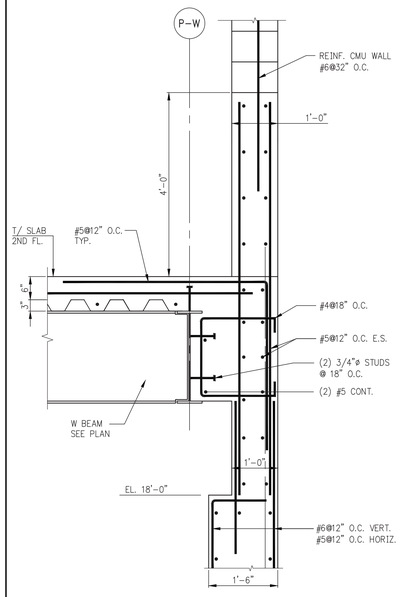

7 S-970 SECTION
SCALE: 3/4" = 1'-0"

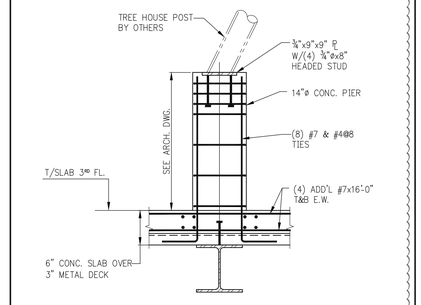

8 S-970 SECTION
SCALE: 3/4" = 1'-0"

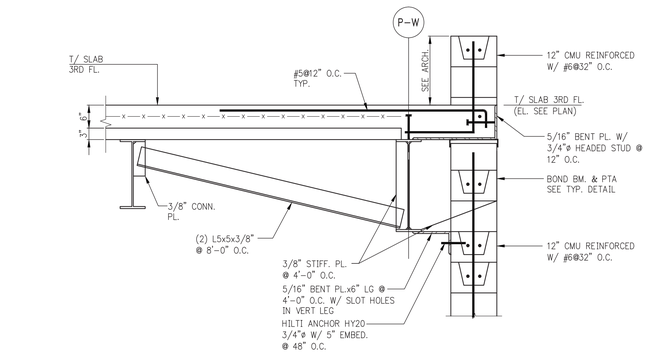

9 S-970 SECTION
SCALE: 3/4" = 1'-0"

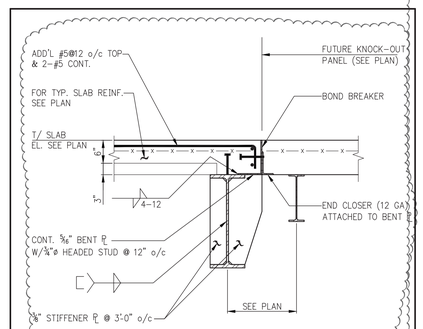

11 S-970 SECTION (AT KNOCK-OUT SLAB)
SCALE: 3/4" = 1'-0"

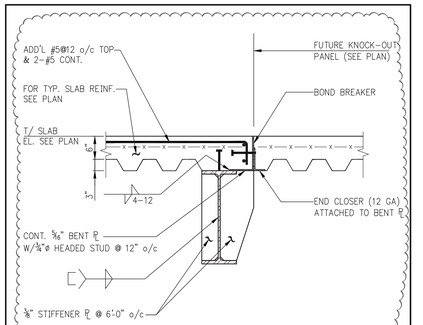

12 S-970 SECTION (AT KNOCK-OUT SLAB)
SCALE: 3/4" = 1'-0"

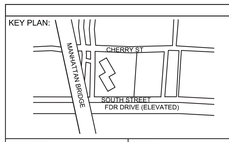

PROJECT NORTH | TRUE NORTH

DEVELOPER:
EXTELL DEVELOPMENT COMPANY
805 Third Ave, 7th Floor
New York, NY 10022
TEL: 212-712-6000 FAX: 212-712-6100

ARCHITECT OF RECORD:
AAI ARCHITECTS, P.C.
14 Wall Street, 2nd Floor
New York, NY 10005
TEL: 212-964-4040 FAX: 212-964-4090

INTERIOR DESIGNER:
MEYER DAVIS
180 Varick St, suite 404
New York, NY 10014
TEL: 212-627-5574

LANDSCAPE DESIGNER:
WEST 8 URBAN DESIGN & LANDSCAPE ARCHITECTURE P.C.
333 Hudson Street, Suite 905
New York, NY 10013
TEL: 212-285-0088 FAX: 212-285-0228

STRUCTURAL ENGINEERS:
WSP
228 East 45th Street
New York, NY 10017
TEL: 212-687-9888 FAX: 646-487-5501

MEP ENGINEERS:
ICOR ASSOCIATES, LLC
485 C Route 1 South, Suite 200
Iseline, NJ 08830
TEL: 908-272-3300 FAX: 908-272-4440

GEOTECHNICAL ENGINEERS:
LANGAN ENGINEERING & ENVIRONMENTAL SERVICES
21 Penn Plaza - 360 West 31st Street, 8th Floor
New York, NY 10001
TEL: 212.479.5400 FAX: 212.479.5444

No.	DESCRIPTION:	DATE:
1	STEEL BID PACKAGE	02-24-15
2	CONCRETE BID PACKAGE	03-06-15
3	ADDENDUM #3	03-27-15
4	50% CONSTRUCTION DOCUMENTS	04-08-15
5	ADDENDUM #4	04-24-15
6	ADDENDUM #5	05-01-15
7	ISSUED FOR FILING	07-28-15

Discrepancies must be reported immediately to the Architect before proceeding. Only figured dimensions are to be used. Contractors must check all dimensions on site. This drawing is protected by copyright.

ALL DIMENSIONS ARE SHOWN IN IMPERIAL.

CONSULTANT: WSP

PROJECT:
250 SOUTH STREET
NEW YORK, NY

DRAWING TITLE:
SUPERSTRUCTURE
SECTIONS 1

SEAL & SIGNATURE:
STATE OF NEW YORK · RICHARD RANDAZZO · No. 095551 · LICENSED PROFESSIONAL ENGINEER

DATE:	07/25/14
PROJECT No:	1302510
DRAWN: CADD	REV:
CHK: CL	
SCALE: N.T.S.	
DWG No:	**S-970.01**
DOB PAGE No:	of

DOB EMPLOYEE STAMP:
Damian Titus
Buildings
APPROVED
Under Directive 2 of 1975
AMENDED APPLICATION
Date: 10/08/2015
NYC Development Hub

DOB B-SCAN:

FILE NAME:
PLOT DATE:

DEPT OF BLDGS121185528 Job Number
E59950061684 Scan Code
30" x 42" Arch E1 - SHEET SIZE

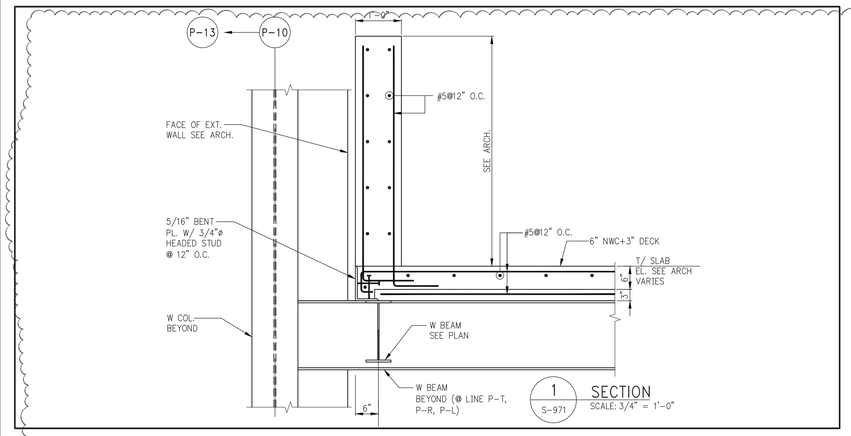

1 S-971 SECTION SCALE: 3/4" = 1'-0"

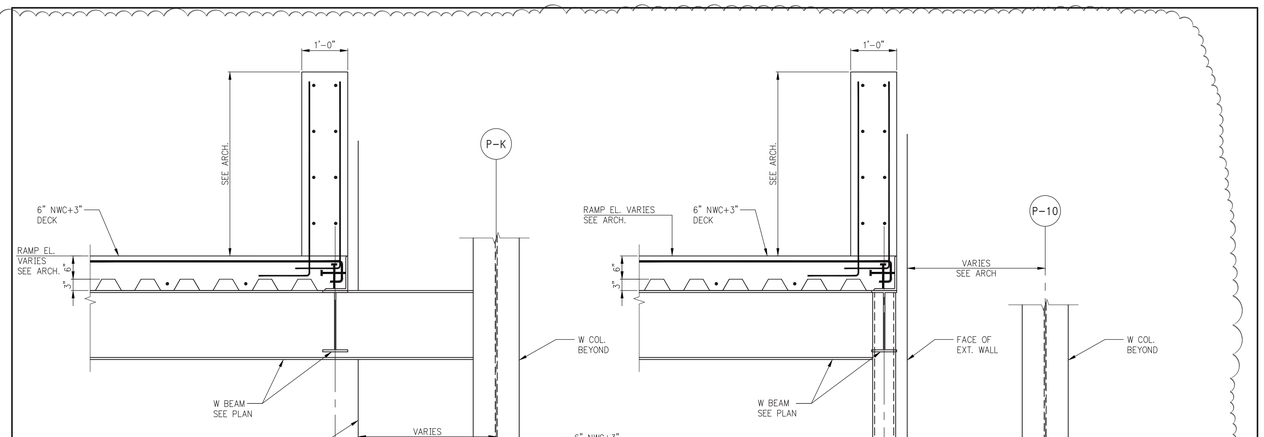

2 S-971 SECTION SCALE: 3/4" = 1'-0"

2A S-971 SECTION SCALE: 3/4" = 1'-0"

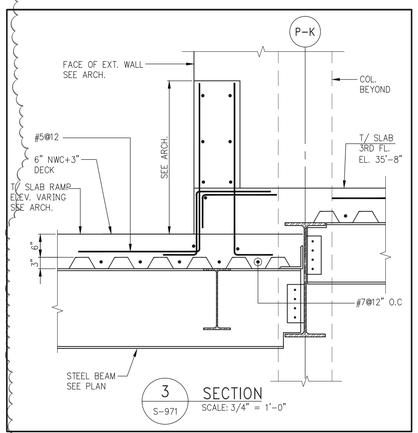

3 S-971 SECTION SCALE: 3/4" = 1'-0"

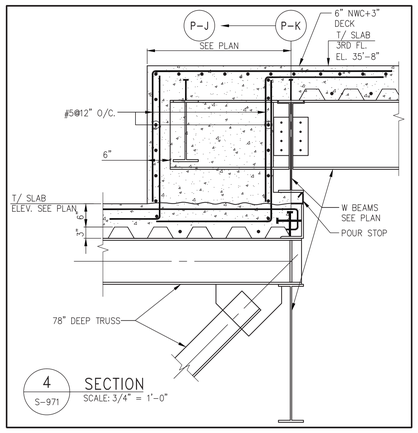

4 S-971 SECTION SCALE: 3/4" = 1'-0"

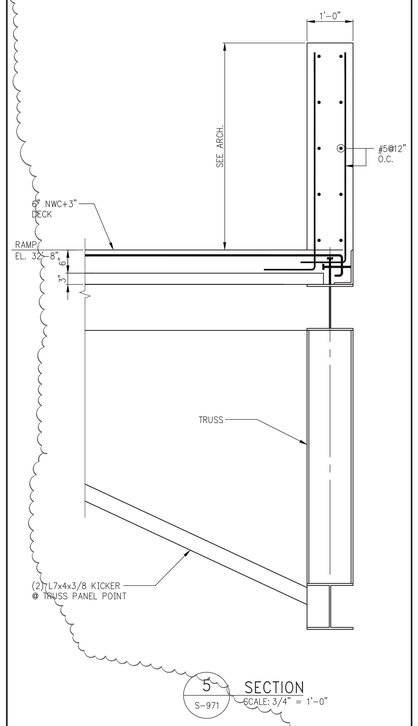

5 S-971 SECTION SCALE: 3/4" = 1'-0"

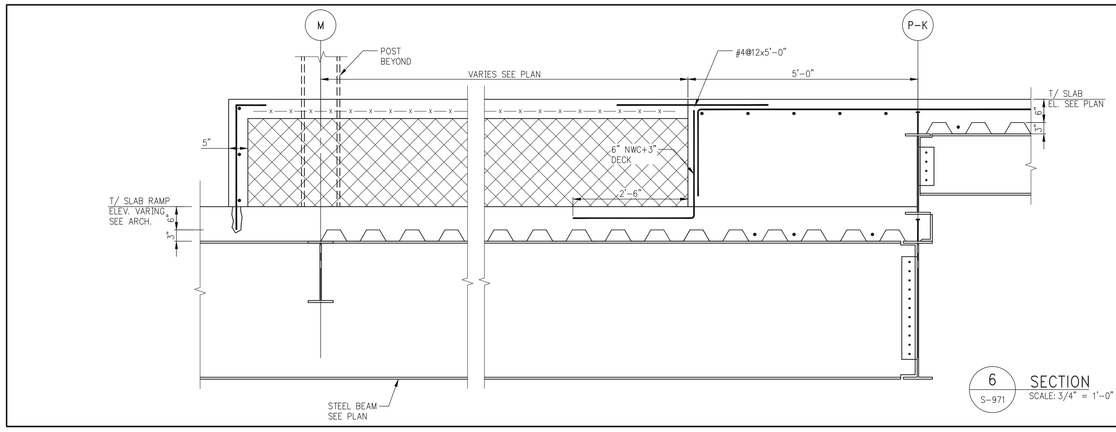

6 S-971 SECTION SCALE: 3/4" = 1'-0"

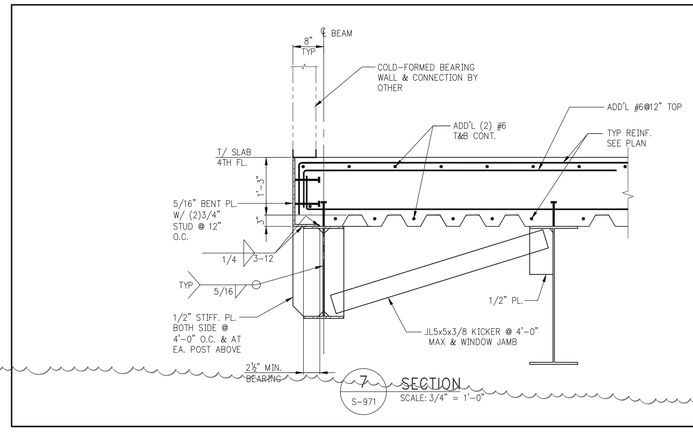

7 S-971 SECTION SCALE: 3/4" = 1'-0"

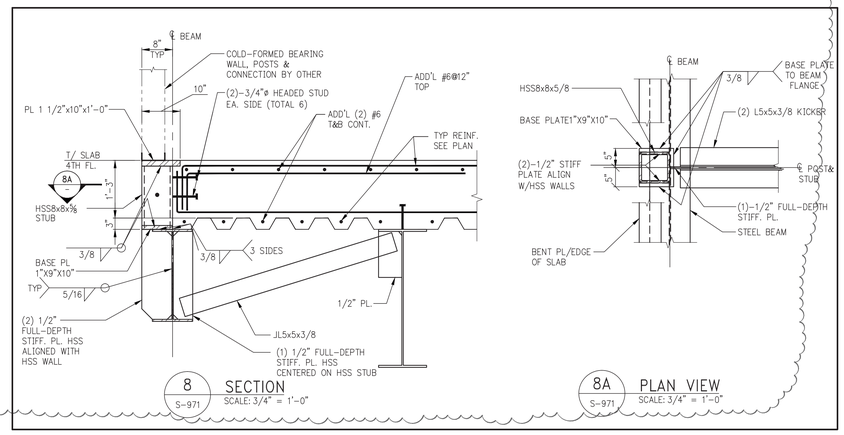

8 S-971 SECTION SCALE: 3/4" = 1'-0"

8A S-971 PLAN VIEW SCALE: 3/4" = 1'-0"

KEY PLAN:

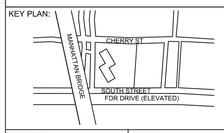

PROJECT NORTH | TRUE NORTH

DEVELOPER:
EXTELL DEVELOPMENT COMPANY
805 Third Ave, 7th Floor
New York, NY 10022
TEL: 212-712-6000 FAX: 212-712-6100

ARCHITECT OF RECORD:
AAI ARCHITECTS, P.C.
14 Wall Street, 2nd Floor
New York, NY 10005
TEL: 212-964-4040 FAX: 212-964-4090

INTERIOR DESIGNER:
MEYER DAVIS
180 Varick St, suite 404
New York, NY 10014
TEL: 212-627-5574

LANDSCAPE DESIGNER:
WEST 8 URBAN DESIGN & LANDSCAPE ARCHITECTURE P.C.
333 Hudson Street, Suite 905
New York, NY 10013
TEL: 212-285-0088 FAX: 212-285-0228

STRUCTURAL ENGINEERS:
WSP
228 East 45th Street
New York, NY 10017
TEL: 212-687-9888 FAX: 646-487-5501

MEP ENGINEERS:
ICOR ASSOCIATES, LLC
485 C Route 1 South, Suite 200
Iseline, NJ 08830
TEL: 908-272-3300 FAX: 908-272-4440

GEOTECHNICAL ENGINEERS:
LANGAN ENGINEERING & ENVIRONMENTAL SERVICES
21 Penn Plaza - 360 West 31st Street, 8th Floor
New York, NY 10001
TEL: 212.479.5400 FAX: 212.479.5444

No.	DESCRIPTION:	DATE:
1	CONCRETE BID PACKAGE	03-06-15
2	ADDENDUM #3	03-27-15
3	50% CONSTRUCTION DOCUMENTS	04-08-15
4	ADDENDUM #4	04-24-15
5	ADDENDUM #5	05-01-15
6	ADDENDUM #10	07-22-15
7	ISSUED FOR FILING	07-28-15

Discrepancies must be reported immediately to the Architect before proceeding. Only figured dimensions are to be used. Contractors must check all dimensions on site. This drawing is protected by copyright.

ALL DIMENSIONS ARE SHOWN IN IMPERIAL.

CONSULTANT: WSP

PROJECT:
250 SOUTH STREET
NEW YORK, NY

DRAWING TITLE:
SUPERSTRUCTURE SECTIONS 2

SEAL & SIGNATURE: STATE OF NEW YORK · AHMAD RAHIMIAN · No. 085527 · LICENSED PROFESSIONAL ENGINEER

DATE:	07/25/14
PROJECT No:	1302510
DRAWN: CADD	REV:
CHK: CL	
SCALE: N.T.S.	
DWG No:	**S-971.01**
DOB PAGE No:	of

DOB EMPLOYEE STAMP:
Damian Titus
NYC Buildings
APPROVED
Under Directive 2 of 1975
AMENDED APPLICATION
Date: 10/08/2015
NYC Development Hub

DOB B-SCAN:

FILE NAME:
PLOT DATE:

DEPT OF BLDGS121185028 Job Number
IES090027249 Scan Code

30" x 42" Arch E1 - SHEET SIZE

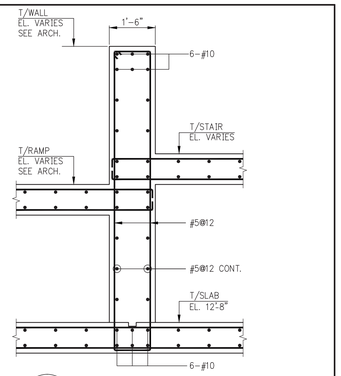

1 S-972 SECTION @ 1ST FLOOR
SCALE: ½"=1'-0"

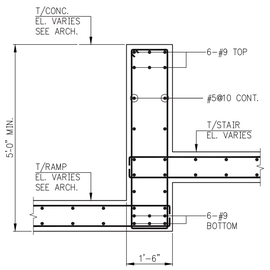

2 S-972 SECTION
SCALE: ½"=1'-0"

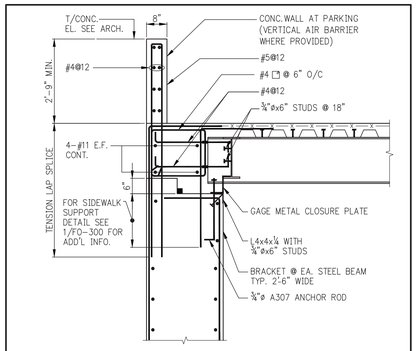

4 S-972 TYPICAL STEEL BEAM SUPPORT WITH PARAPET
SCALE: ½"=1'-0"

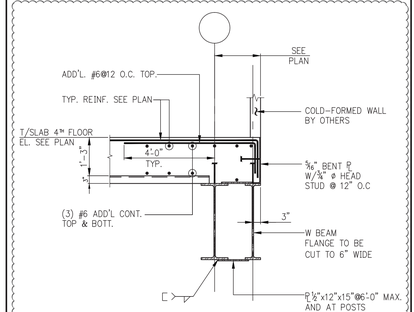

5 S-972 SECTION
SCALE: ½"=1'-0"

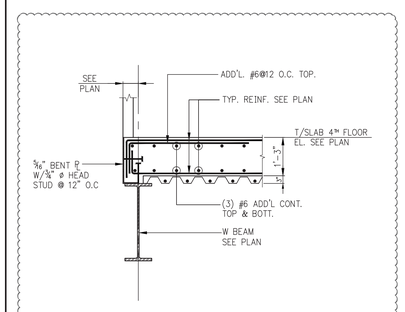

6 S-972 SECTION
SCALE: ½"=1'-0"

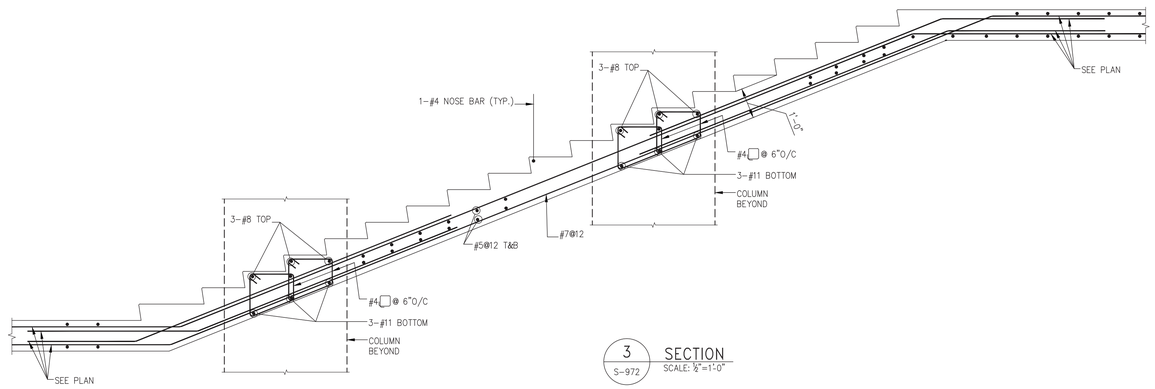

3 S-972 SECTION
SCALE: ½"=1'-0"

KEY PLAN:

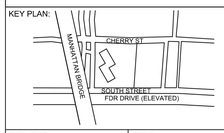

PROJECT NORTH | TRUE NORTH

DEVELOPER:
EXTELL DEVELOPMENT COMPANY
805 Third Ave, 7th Floor
New York, NY 10022
TEL: 212-712-6000 FAX: 212-712-6100

ARCHITECT OF RECORD:
AAI ARCHITECTS, P.C.
14 Wall Street, 2nd Floor
New York, NY 10005
TEL: 212-964-4040 FAX: 212-964-4090

INTERIOR DESIGNER:
MEYER DAVIS
180 Varick St, suite 404
New York, NY 10014
TEL: 212-627-5574

LANDSCAPE DESIGNER:
WEST 8 URBAN DESIGN & LANDSCAPE ARCHITECTURE P.C.
333 Hudson Street, Suite 905
New York, NY 10013
TEL: 212-285-0088 FAX: 212-285-0228

STRUCTURAL ENGINEERS:
WSP
228 East 45th Street
New York, NY 10017
TEL: 212-687-9888 FAX: 646-487-5501

MEP ENGINEERS:
ICOR ASSOCIATES, LLC
485 C Route 1 South, Suite 200
Iseline, NJ 08830
TEL: 908-272-3300 FAX: 908-272-4440

GEOTECHNICAL ENGINEERS:
LANGAN ENGINEERING & ENVIRONMENTAL SERVICES
21 Penn Plaza - 360 West 31st Street, 8th Floor
New York, NY 10001
TEL: 212.479.5400 FAX: 212.479.5444

No.	DESCRIPTION:	DATE:
1	CONCRETE BID PACKAGE	03-06-15
2	50% CONSTRUCTION DOCUMENTS	04-08-15
3	ADDENDUM # 4	04-24-15
4	ISSUED FOR FILING	07-28-15

Discrepancies must be reported immediately to the Architect before proceeding. Only figured dimensions are to be used. Contractors must check all dimensions on site. This drawing is protected by copyright.

ALL DIMENSIONS ARE SHOWN IN IMPERIAL.

CONSULTANT: WSP

PROJECT:
250 SOUTH STREET
NEW YORK, NY

DRAWING TITLE:
SUPERSTRUCTURE
SECTIONS 3

SEAL & SIGNATURE:

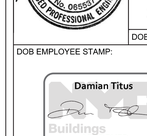

DATE:	07/25/14	
PROJECT No:	1302510	
DRAWN:	CADD	REV:
CHK:	CL	
SCALE:	N.T.S.	

DWG No:
S-972.01

DOB PAGE No: of

DOB EMPLOYEE STAMP:

DOB B-SCAN:

FILE NAME:
PLOT DATE:

DEPT OF BLDGS121185639 Job Number
ES0452185633 Scan Code

30" x 42" Arch E1 - SHEET SIZE

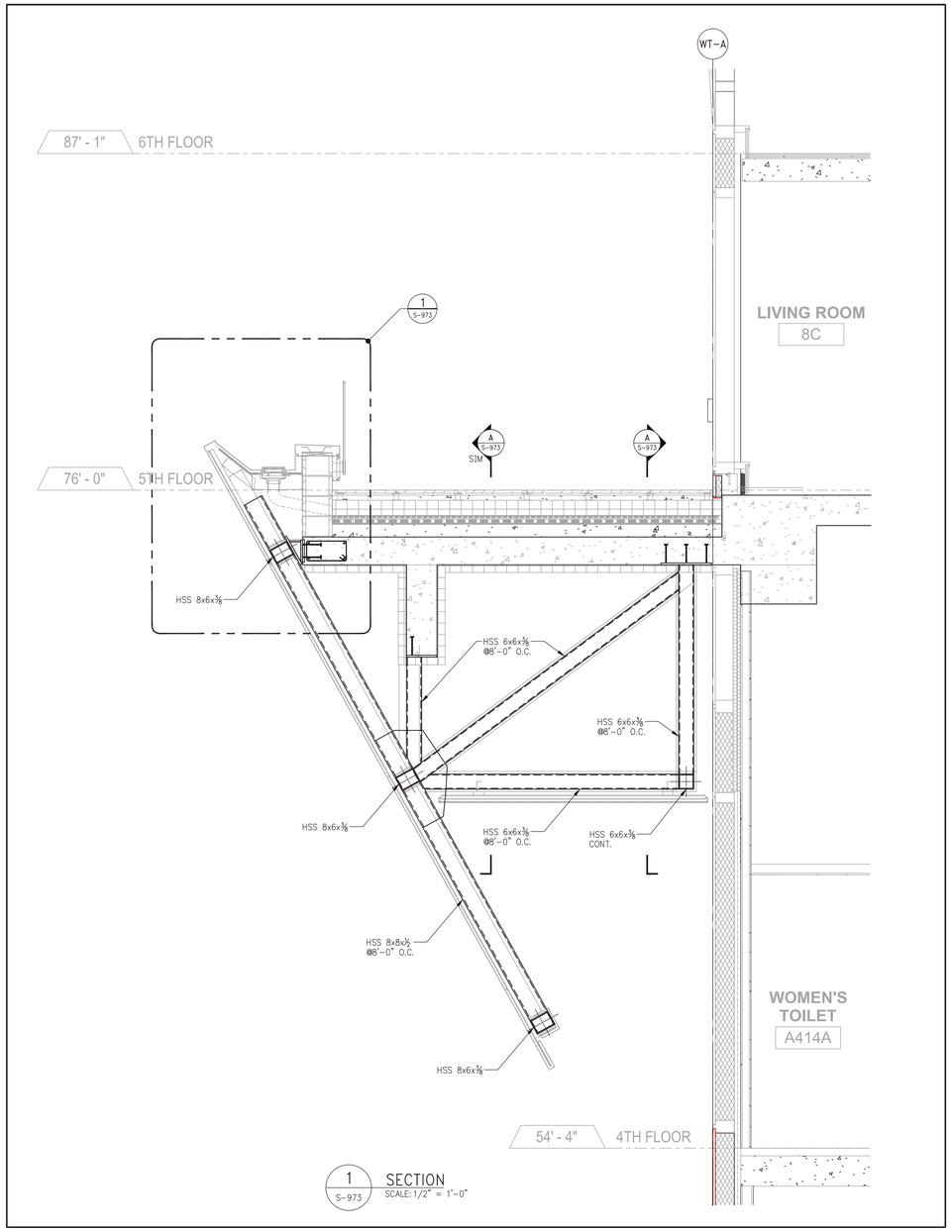

1 S-973 SECTION
SCALE: 1/2" = 1'-0"

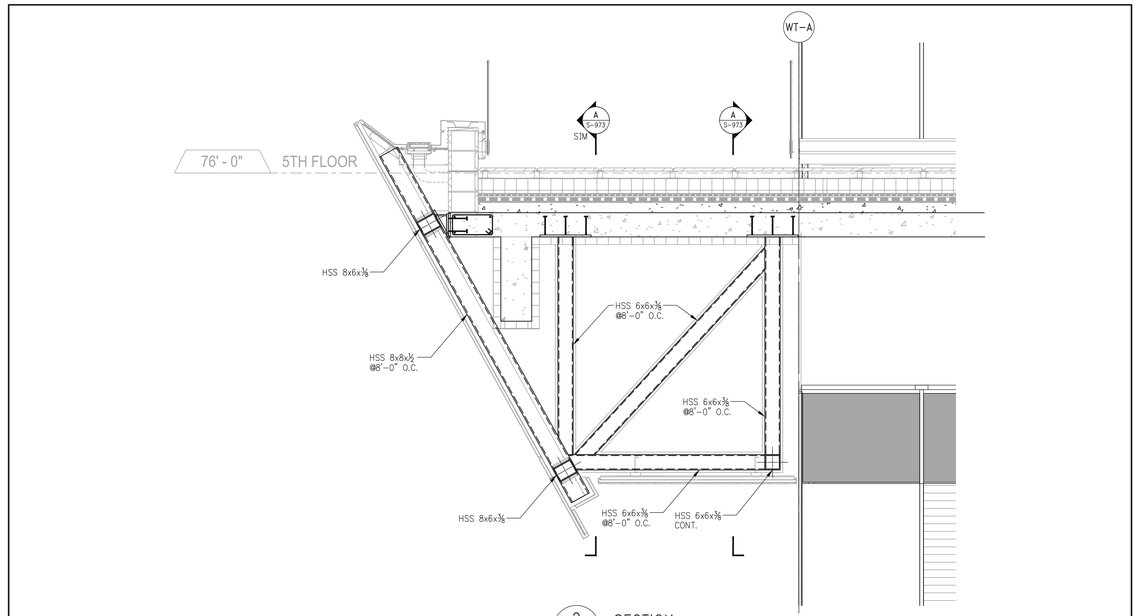

2 S-973 SECTION
SCALE: 1/2" = 1'-0"

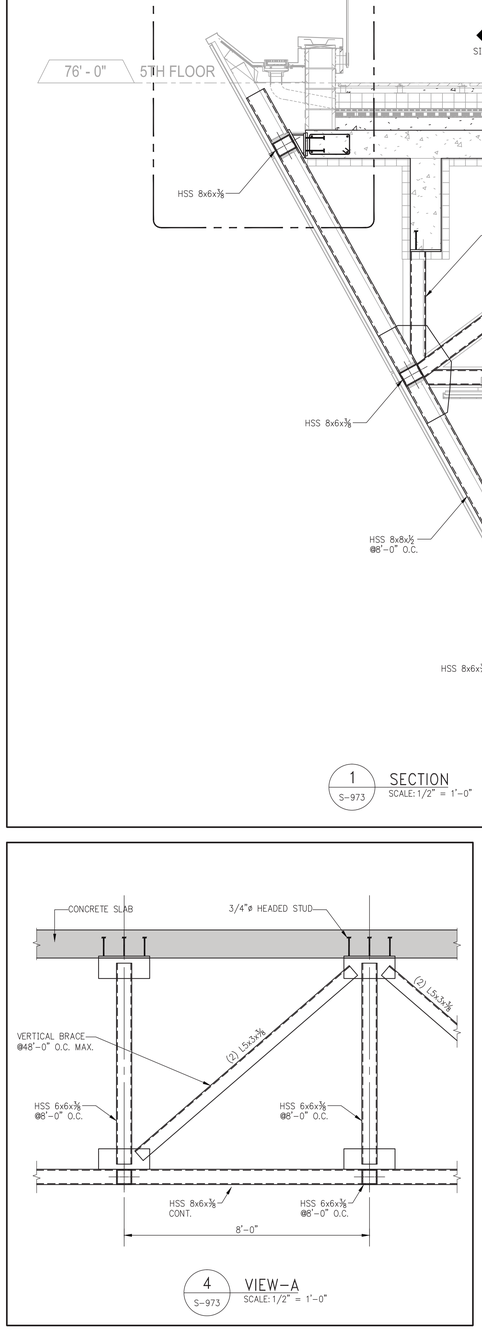

4 S-973 VIEW-A
SCALE: 1/2" = 1'-0"

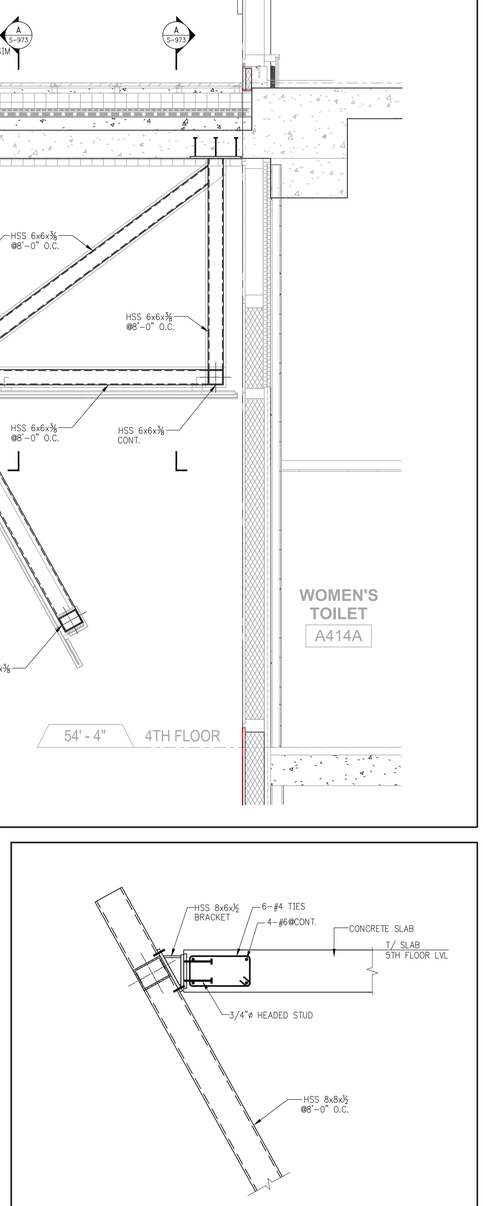

5 S-973 DETAIL-1
SCALE: 3/4" = 1'-0"

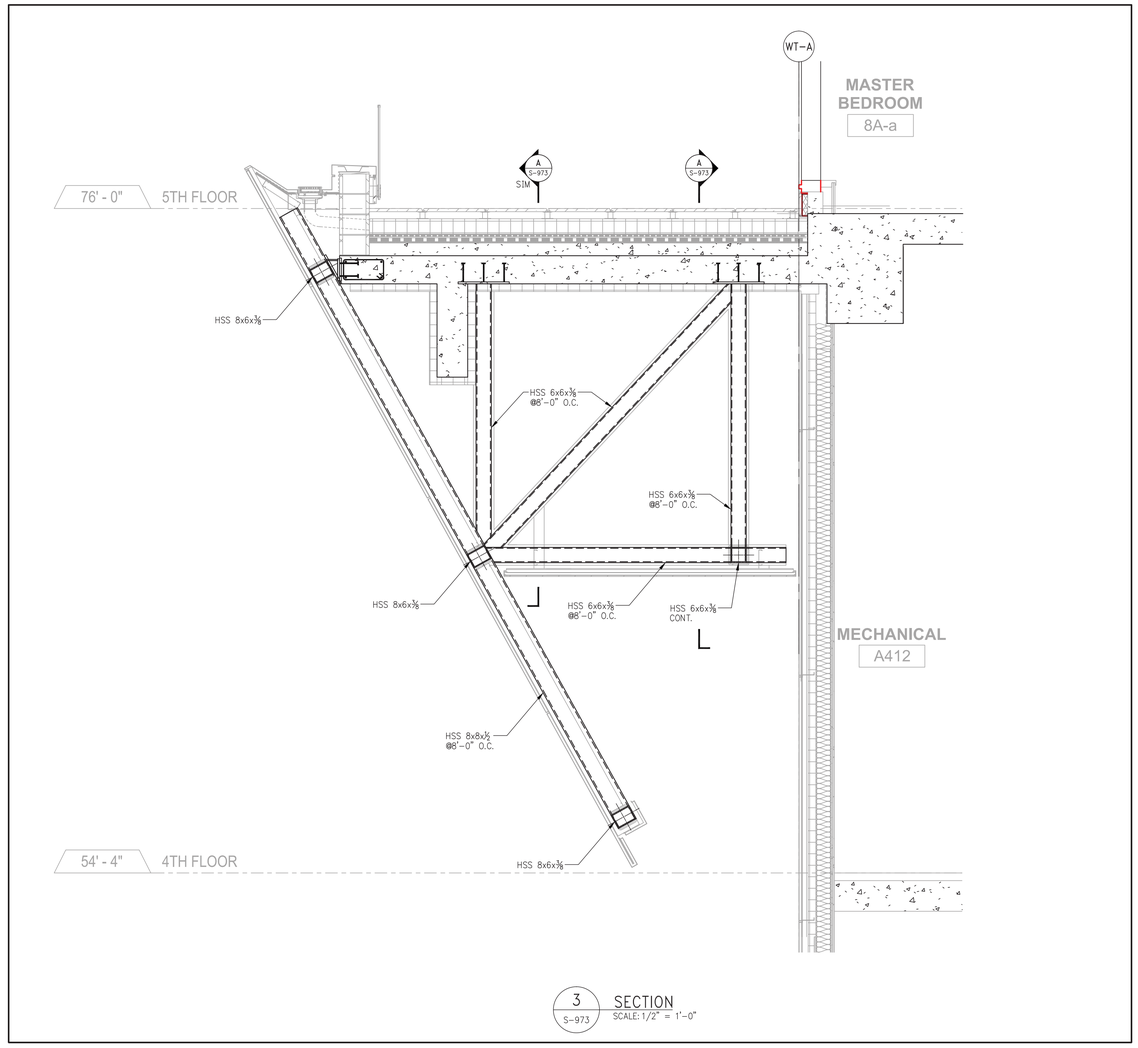

3 S-973 SECTION
SCALE: 1/2" = 1'-0"

KEY PLAN:

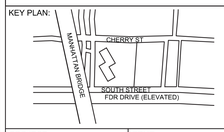

PROJECT NORTH

TRUE NORTH

DEVELOPER:
EXTELL DEVELOPMENT COMPANY
805 Third Ave, 7th Floor
New York, NY 10022
TEL: 212-712-6000 FAX: 212-712-6100

ARCHITECT OF RECORD:
AAI ARCHITECTS, P.C.
14 Wall Street, 2nd Floor
New York, NY 10005
TEL: 212-964-4040 FAX: 212-964-4090

INTERIOR DESIGNER:
MEYER DAVIS
180 Varick St, suite 404
New York, NY 10014
TEL: 212-627-5574

LANDSCAPE DESIGNER:
WEST 8 URBAN DESIGN & LANDSCAPE ARCHITECTURE P.C.
333 Hudson Street, Suite 905
New York, NY 10013
TEL: 212-285-0088 FAX: 212-285-0228

STRUCTURAL ENGINEERS:
WSP
228 East 45th Street
New York, NY 10017
TEL: 212-687-9888 FAX: 646-487-5501

MEP ENGINEERS:
ICOR ASSOCIATES, LLC
485 C Route 1 South, Suite 200
Iselin, NJ 08830
TEL: 908-272-3300 FAX: 908-272-4440

GEOTECHNICAL ENGINEERS:
LANGAN ENGINEERING & ENVIRONMENTAL SERVICES
21 Penn Plaza - 360 West 31st Street, 8th Floor
New York, NY 10001
TEL: 212.479.5400 FAX: 212.479.5444

No.	DESCRIPTION:	DATE:
1	50% CONSTRUCTION DOCUMENTS	04-08-15
2	ISSUED FOR FILING	07-28-15

Discrepancies must be reported immediately to the Architect before proceeding. Only figured dimensions are to be used. Contractors must check all dimensions on site. This drawing is protected by copyright.

ALL DIMENSIONS ARE SHOWN IN IMPERIAL.

CONSULTANT:
WSP

PROJECT:
250 SOUTH STREET
NEW YORK, NY

DRAWING TITLE:
SUPERSTRUCTURE
SECTIONS 4

SEAL & SIGNATURE:
STATE OF NEW YORK · ARSHAD RAHIMAN · No. 095557 · LICENSED PROFESSIONAL ENGINEER

DATE:	07/25/14
PROJECT No:	1302510
DRAWN: CADD	REV:
CHK: CL	
SCALE: N.T.S.	
DWG No:	S-973.00
DOB PAGE No:	of

DOB EMPLOYEE STAMP:
Damian Titus
BuildNYC
APPROVED
Under Directive 2 of 1975
AMENDED APPLICATION
Date: 10/08/2015
NYC Development Hub

DOB B-SCAN:

FILE NAME:
PLOT DATE:

DEPT OF BLDGS121185539 Job Number
E35Y9511432 Scan Code

30" x 42" Arch E1 - SHEET SIZE

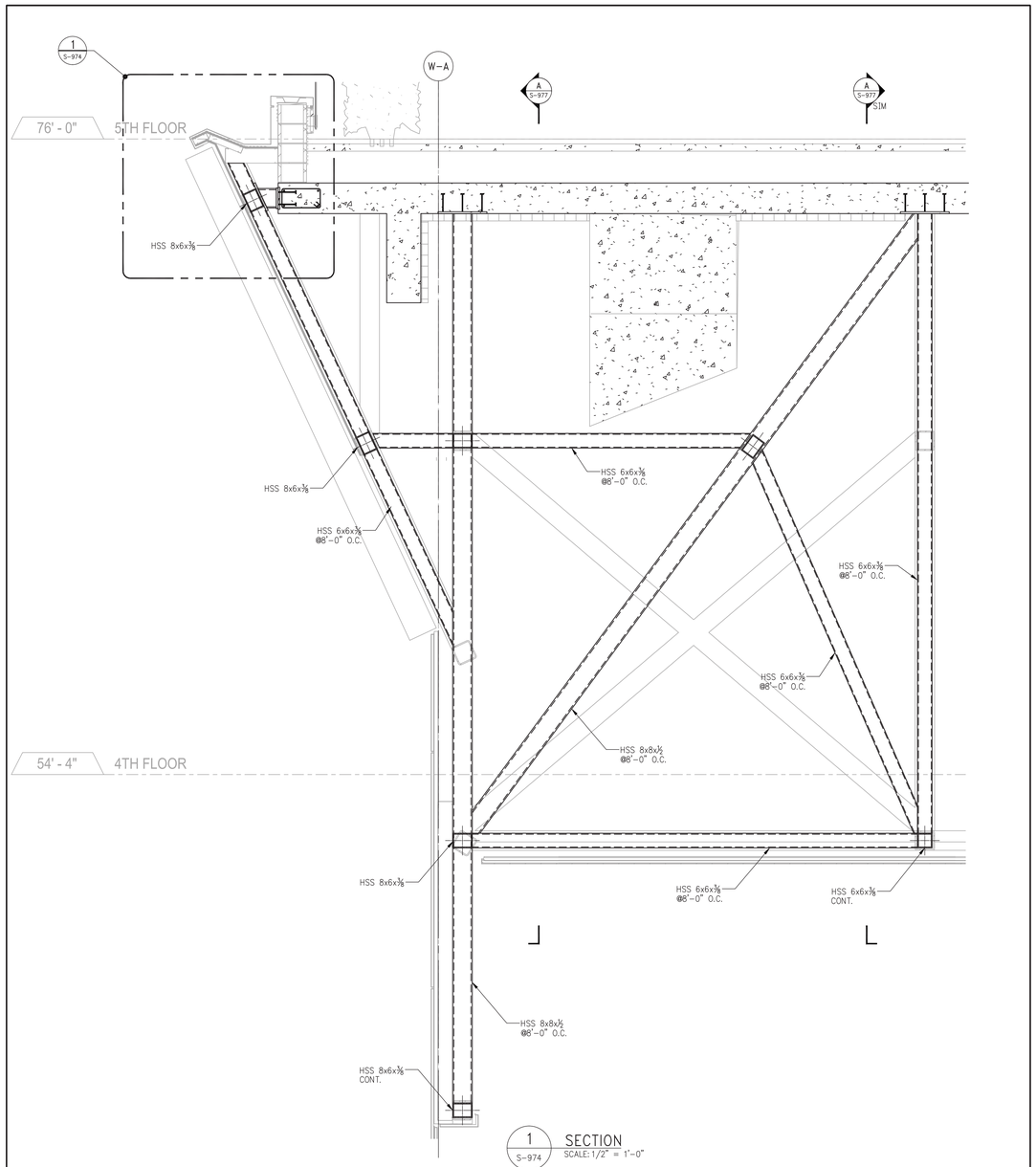

1 S-974 SECTION
SCALE: 1/2" = 1'-0"

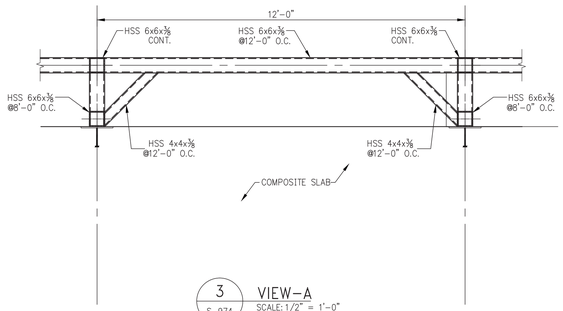

3 S-974 VIEW-A
SCALE: 1/2" = 1'-0"

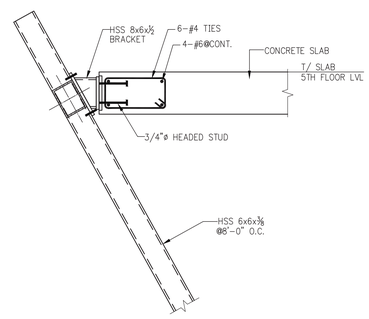

4 S-974 DETAIL-1
SCALE: 3/4" = 1'-0"

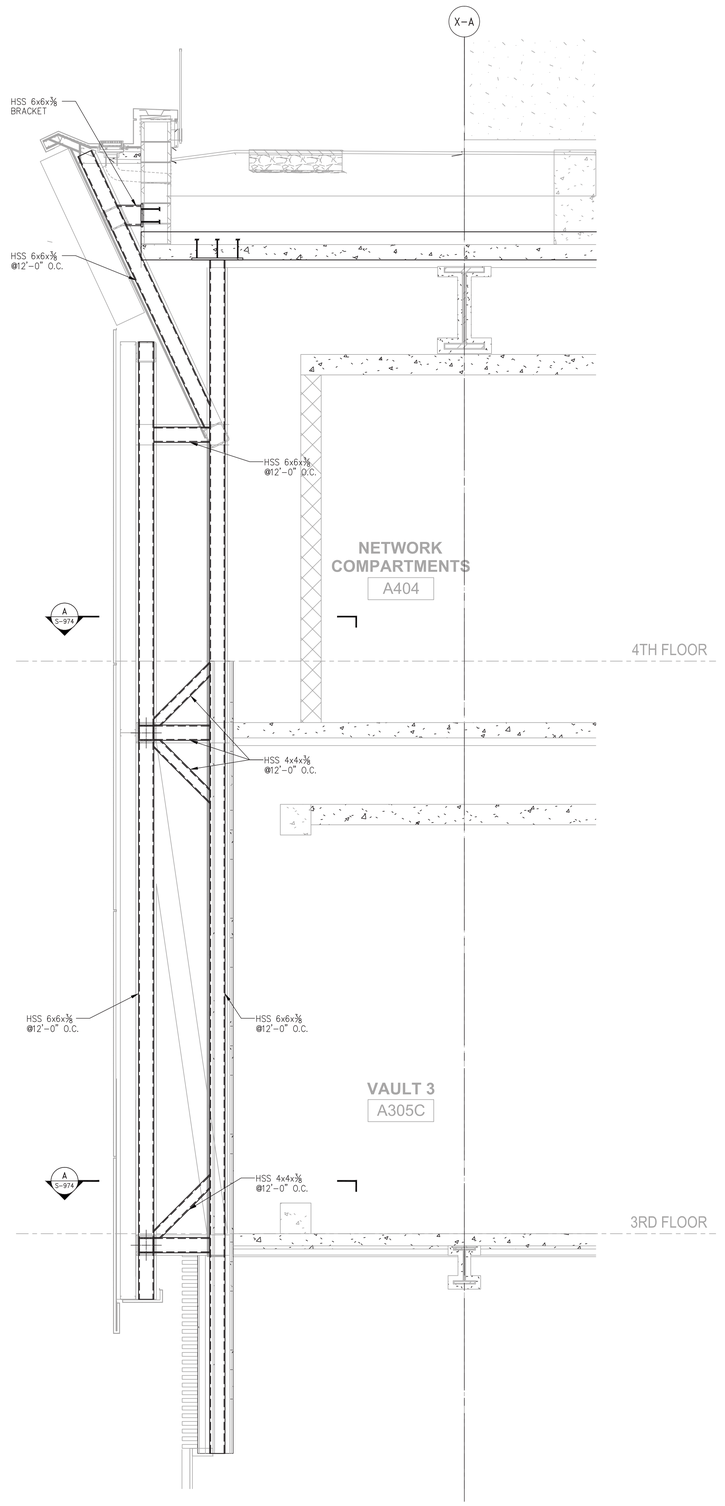

2 S-974 SECTION
SCALE: 1/2" = 1'-0"

KEY PLAN:

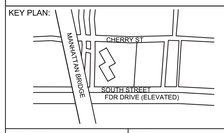

PROJECT NORTH

TRUE NORTH

DEVELOPER:
EXTELL DEVELOPMENT COMPANY
805 Third Ave, 7th Floor
New York, NY 10022
TEL: 212-712-6000 FAX: 212-712-6100

ARCHITECT OF RECORD:
AAI ARCHITECTS, P.C.
14 Wall Street, 2nd Floor
New York, NY 10005
TEL: 212-964-4040 FAX: 212-964-4090

INTERIOR DESIGNER:
MEYER DAVIS
180 Varick St, suite 404
New York, NY 10014
TEL: 212-627-5574

LANDSCAPE DESIGNER:
WEST 8 URBAN DESIGN & LANDSCAPE ARCHITECTURE P.C.
333 Hudson Street, Suite 905
New York, NY 10013
TEL: 212-285-0088 FAX: 212-285-0228

STRUCTURAL ENGINEERS:
WSP
228 East 45th Street
New York, NY 10017
TEL: 212-687-9888 FAX: 646-487-5501

MEP ENGINEERS:
ICOR ASSOCIATES, LLC
485 C Route 1 South, Suite 200
Iselin, NJ 08830
TEL: 908-272-3300 FAX: 908-272-4440

GEOTECHNICAL ENGINEERS:
LANGAN ENGINEERING & ENVIRONMENTAL SERVICES
21 Penn Plaza - 360 West 31st Street, 8th Floor
New York, NY 10001
TEL: 212.479.5400 FAX: 212.479.5444

No.	DESCRIPTION:	DATE:
1	50% CONSTRUCTION DOCUMENTS	04-08-15
2	ISSUED FOR FILING	07-28-15

Discrepancies must be reported immediately to the Architect before proceeding. Only figured dimensions are to be used. Contractors must check all dimensions on site. This drawing is protected by copyright.

ALL DIMENSIONS ARE SHOWN IN IMPERIAL.

CONSULTANT:
WSP

PROJECT:
250 SOUTH STREET
NEW YORK, NY

DRAWING TITLE:
SUPERSTRUCTURE
SECTIONS 5

SEAL & SIGNATURE:
STATE OF NEW YORK · AHMAD RAHIMIAN · No. 085527 · LICENSED PROFESSIONAL ENGINEER

DATE:	07/25/14
PROJECT No:	1302510
DRAWN: CADD	REV:
CHK: CL	
SCALE: N.T.S.	
DWG No:	**S-974.00**
DOB PAGE No:	of

DOB EMPLOYEE STAMP:
Damian Titus
Buildings
APPROVED
Under Directive 2 of 1975
AMENDED APPLICATION
Date: 10/08/2015
NYC Development Hub

DOB B-SCAN:

FILE NAME:
PLOT DATE:

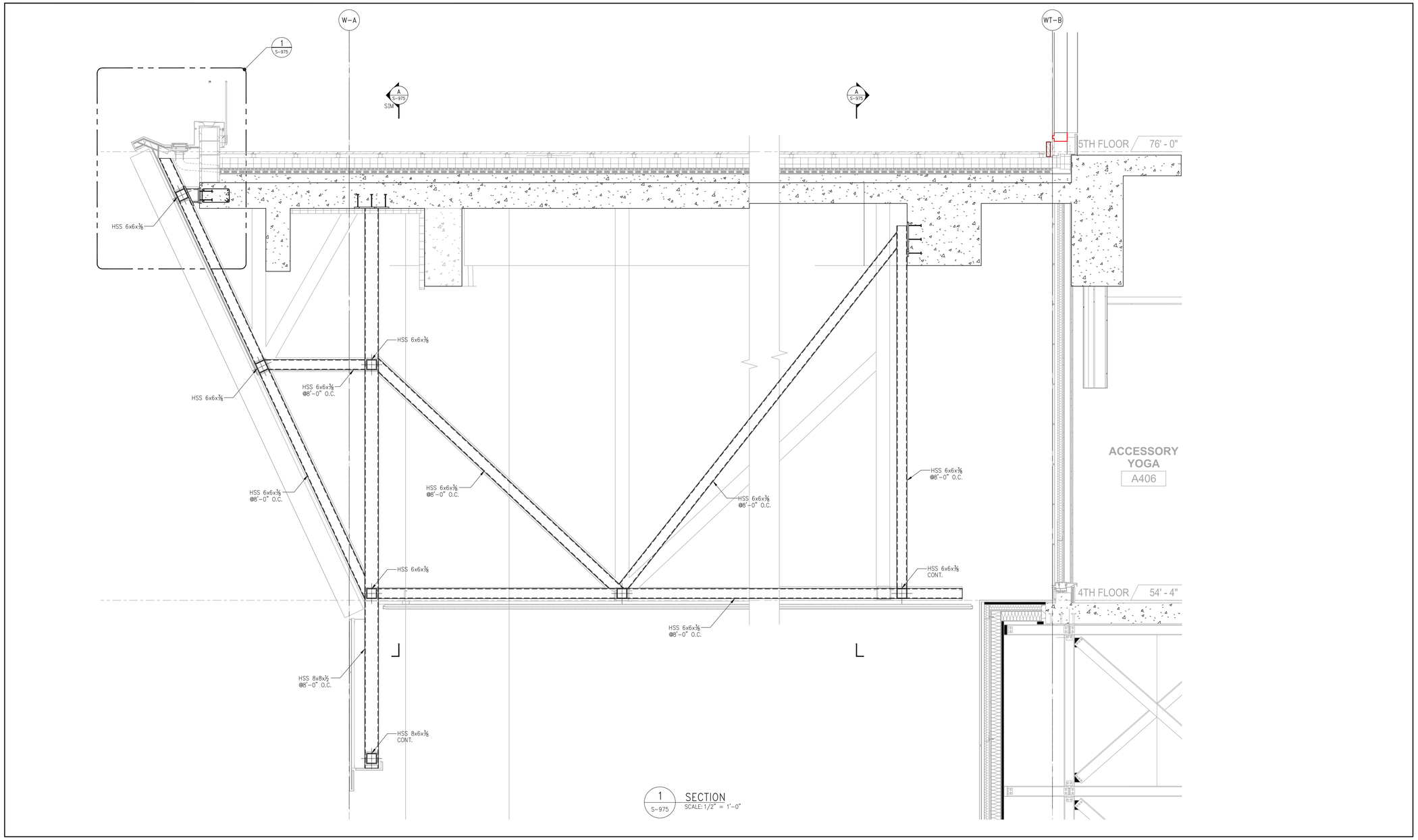

1 SECTION
S-975 SCALE: 1/2" = 1'-0"

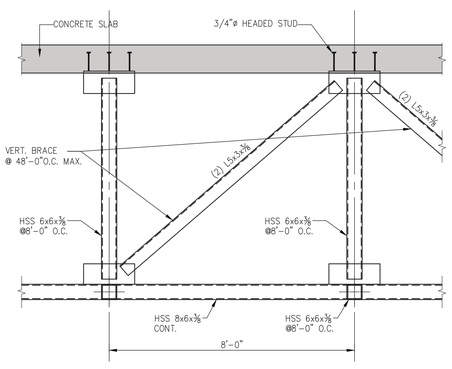

2 VIEW-A
S-975 SCALE: 1/2" = 1'-0"

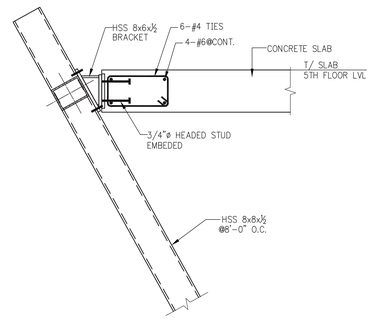

3 DETAIL-1
S-975 SCALE: 3/4" = 1'-0"

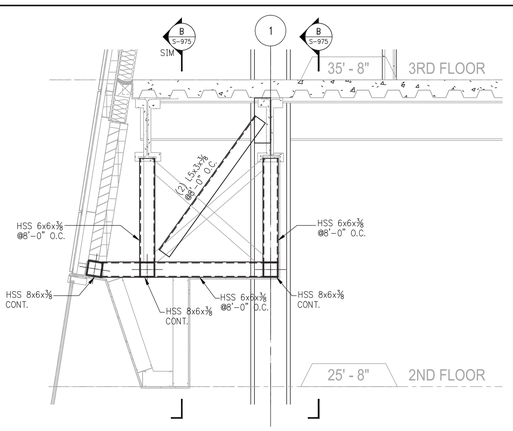

4 SECTION
S-975 SCALE: 1/2" = 1'-0"

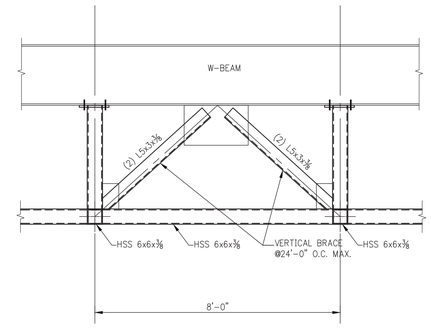

5 VIEW-B
S-975 SCALE: 1/2" = 1'-0"

KEY PLAN:

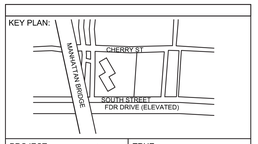

PROJECT NORTH

TRUE NORTH

DEVELOPER:
EXTELL DEVELOPMENT COMPANY
805 Third Ave, 7th Floor
New York, NY 10022
TEL: 212-712-6000 FAX: 212-712-6100

ARCHITECT OF RECORD:
AAI ARCHITECTS, P.C.
14 Wall Street, 2nd Floor
New York, NY 10005
TEL: 212-964-4040 FAX: 212-964-4090

INTERIOR DESIGNER:
MEYER DAVIS
180 Varick St, suite 404
New York, NY 10014
TEL: 212-627-5574

LANDSCAPE DESIGNER:
WEST 8 URBAN DESIGN & LANDSCAPE ARCHITECTURE P.C.
333 Hudson Street, Suite 905
New York, NY 10013
TEL: 212-285-0088 FAX: 212-285-0228

STRUCTURAL ENGINEERS:
WSP
228 East 45th Street
New York, NY 10017
TEL: 212-687-9888 FAX: 646-487-5501

MEP ENGINEERS:
ICOR ASSOCIATES, LLC
485 C Route 1 South, Suite 200
Iseline, NJ 08830
TEL: 908-272-3300 FAX: 908-272-4440

GEOTECHNICAL ENGINEERS:
LANGAN ENGINEERING & ENVIRONMENTAL SERVICES
21 Penn Plaza - 360 West 31st Street, 8th Floor
New York, NY 10001
TEL: 212.479.5400 FAX: 212.479.5444

No.	DESCRIPTION:	DATE:
1	50% CONSTRUCTION DOCUMENTS	04-08-15
2	ISSUED FOR FILING	07-28-15

Discrepancies must be reported immediately to the Architect before proceeding. Only figured dimensions are to be used. Contractors must check all dimensions on site. This drawing is protected by copyright.

ALL DIMENSIONS ARE SHOWN IN IMPERIAL.

CONSULTANT:
WSP

PROJECT:
250 SOUTH STREET
NEW YORK, NY

DRAWING TITLE:
SUPERSTRUCTURE
SECTIONS 6

SEAL & SIGNATURE:

STATE OF NEW YORK
AHMAD RAHIMIAN
No. 065537
LICENSED PROFESSIONAL ENGINEER

DATE:	07/25/14
PROJECT No:	1302510
DRAWN: CADD	REV:
CHK: CL	
SCALE: N.T.S.	
DWG No:	S-975.00
DOB PAGE No:	of

DOB EMPLOYEE STAMP:

Damian Titus
NYC Buildings
APPROVED
Under Directive 2 of 1975
AMENDED APPLICATION
Date: 10/08/2015
NYC Development Hub

DOB B-SCAN:

30" x 42" Arch E1 - SHEET SIZE

FILE NAME:
PLOT DATE:

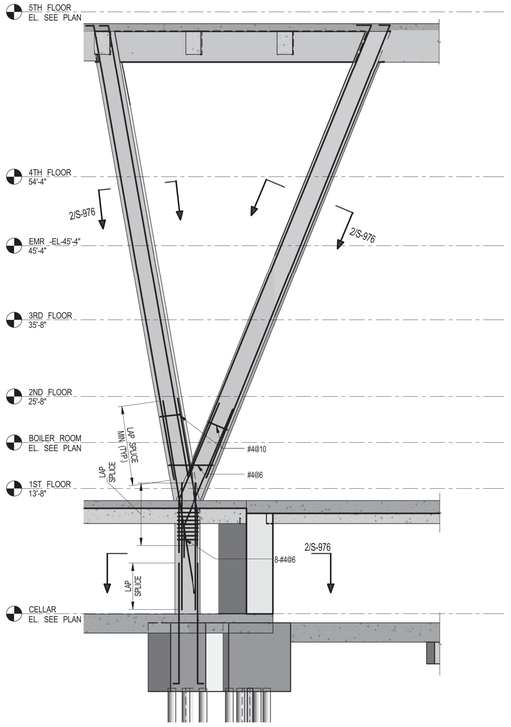

1 S-976 SECTION
SCALE: 1/8" = 1'-0"

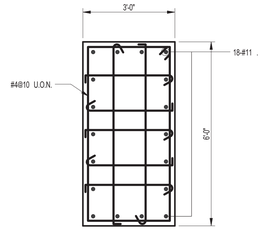

2 S-976 SECTION
SCALE: 1/2" = 1'-0"

KEY PLAN:

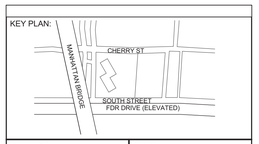

PROJECT NORTH

TRUE NORTH

DEVELOPER:
EXTELL DEVELOPMENT COMPANY
805 Third Ave, 7th Floor
New York, NY 10022
TEL: 212-712-6000 FAX: 212-712-6100

ARCHITECT OF RECORD:
AAI ARCHITECTS, P.C.
14 Wall Street, 2nd Floor
New York, NY 10005
TEL: 212-964-4040 FAX: 212-964-4090

INTERIOR DESIGNER:
MEYER DAVIS
180 Varick St, suite 404
New York, NY 10014
TEL: 212-627-5574

LANDSCAPE DESIGNER:
WEST 8 URBAN DESIGN & LANDSCAPE ARCHITECTURE P.C.
333 Hudson Street, Suite 905
New York, NY 10013
TEL: 212-285-0088 FAX: 212-285-0228

STRUCTURAL ENGINEERS:
WSP
228 East 45th Street
New York, NY 10017
TEL: 212-687-9888 FAX: 646-487-5501

MEP ENGINEERS:
ICOR ASSOCIATES, LLC
485 C Route 1 South, Suite 200
Iseline, NJ 08830
TEL: 908-272-3300 FAX: 908-272-4440

GEOTECHNICAL ENGINEERS:
LANGAN ENGINEERING & ENVIRONMENTAL SERVICES
21 Penn Plaza - 360 West 31st Street, 8th Floor
New York, NY 10001
TEL: 212.479.5400 FAX: 212.479.5444

No.	DESCRIPTION:	DATE:
1	CONCRETE BID PACKAGE	03-06-15
2	ADDENDUM #5	05-01-15
3	ISSUED FOR FILING	07-28-15

Discrepancies must be reported immediately to the Architect before proceeding. Only figured dimensions are to be used. Contractors must check all dimensions on site. This drawing is protected by copyright.

ALL DIMENSIONS ARE SHOWN IN IMPERIAL.

CONSULTANT:
WSP

PROJECT:
250 SOUTH STREET
NEW YORK, NY

DRAWING TITLE:
SUPERSTUCTURE SECTIONS 7

SEAL & SIGNATURE:

DATE:	02/25/15
PROJECT No:	1302510
DRAWN: CAD	REV:
CHK: CL	
SCALE: As indicated	
DWG No:	S-976.00
DOB PAGE No:	of

DOB EMPLOYEE STAMP:

DOB B-SCAN:

30" x 42" Arch E1 - SHEET SIZE

FILE NAME:
PLOT DATE:

DEPT OF BLDGS121185539 Job Number
B350922C0039 Scan Code

30" x 42" Arch E1 - SHEET SIZE

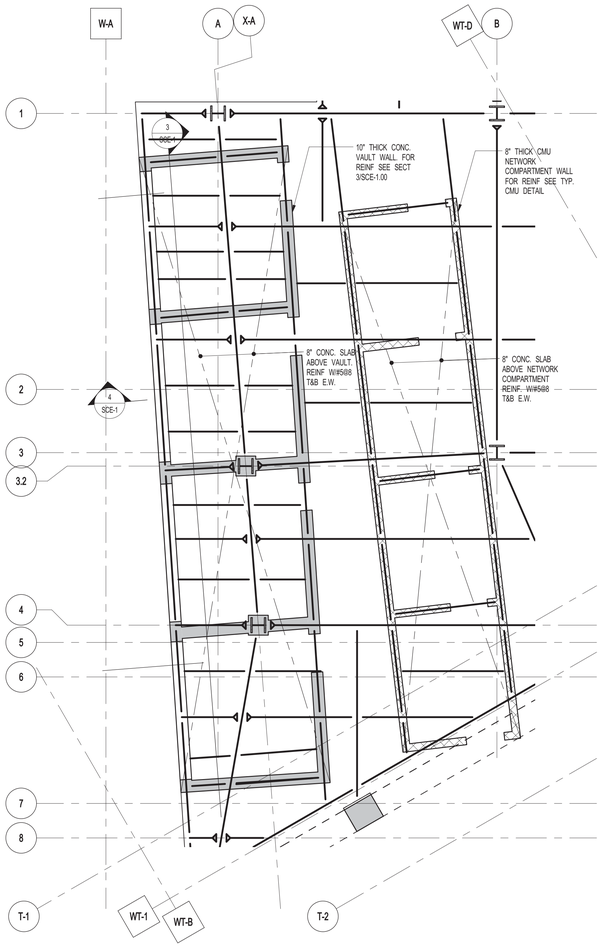

1 SCE-1 3RD FLOOR PART PLAN-VAULT @ TRANSFORMER & NETWORK COMPARTMENT

SCALE: 3/16" = 1'-0"

NOTE: FOR 3RD FLOOR FRAMING SEE DWG. S-033

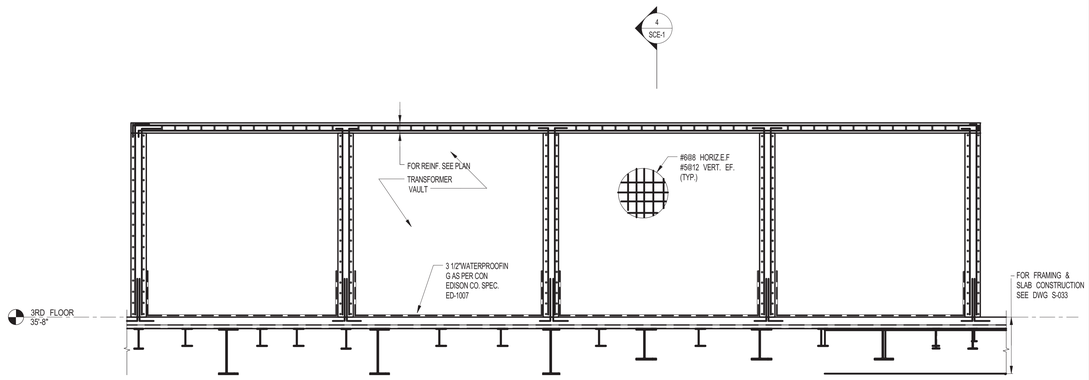

3 SCE-1 SECTION

SCALE: 1/4" = 1'-0"

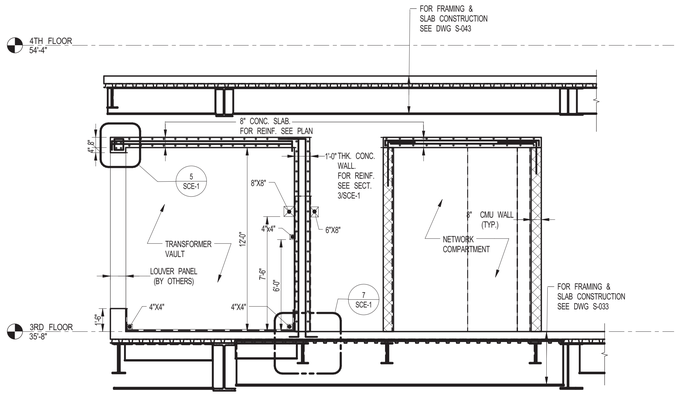

4 SCE-1 SECTION

SCALE: 1/4" = 1'-0"

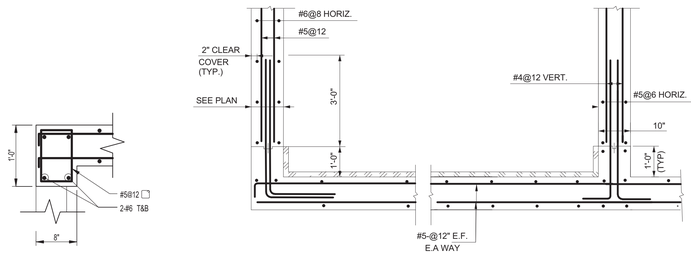

5 SCE-1 DETAIL

SCALE: 1" = 1'-0"

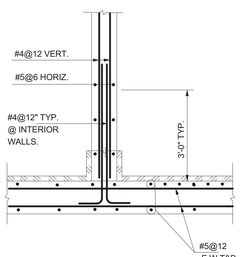

6 SCE-1 TRANSFORMER VAULT DETAIL

SCALE: 1/4" = 1'-0"

7 SCE-1 TRANSFORMER VAULT DETAIL

SCALE: 1/4" = 1'-0"

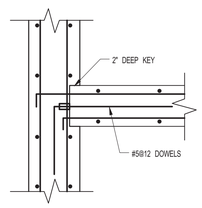

8 SCE-1 DETAIL

SCALE: 1" = 1'-0"

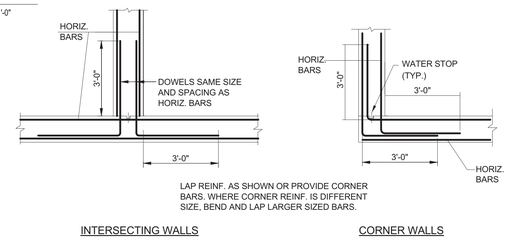

9 SCE-1 TYPICAL WALL INTERSECTION DETAILS

SCALE: 1/4" = 1'-0"

MATERIAL SPECIFICATIONS:

ALL REINFORCING BARS SHALL BE BILLET STEEL, INTERMEDIATE GRADE, DEFORMED, AND SHALL CONFORM TO A.S.T.M. SPEC. DES. A-615 GRADE 60. REINFORCING BARS SHALL BE EPOXY-COATED IN ACCORDANCE WITH A.S.T.M. SPEC. A-775. ALLOWABLE WORKING STRESS 24,000 P.S.I REINFORCING BARS SHALL BE WIRE TIED AT ALL CONTACT POINTS WITH PLASTIC COATED TIE WIRE. REINFORCEMENT SUPPORTED FROM FORMWORK SHALL REST ON COATED WIRE BAR SUPPORTS. EPOXY COATING DAMAGED AS A RESULT OF HANDLING OR CUTTING OF REBARS SHALL BE REPAIRED WITH PATCHING MATERIAL CONFORMING TO A.S.T.M. SPEC. A-775 STRUCTURAL STEEL SHALL CONFIRM TO A.S.T.M. SPEC. DES. A-36. ALLOWABLE WORKING STRESS 22,000 P.S.I.

CONSTRUCTION SPECIFICATION:

ALL CONCRETE SHALL BE NORMAL WEIGHT CONTROLLED CONCRETE (f'c=5,000 P.S.I) TYPE 1. AND COMPLY WITH A.C.I. BUILDING CODE AND THE CURRENT NEW YORK CITY BUILDING CODE. ALL CONCRETE MATERIAL FOR CONSTRUCTION AND PROTECTION FOR REINFORCING BARS SHALL CONFORM TO N.Y. CITY BLDG. CODE RS-10-2, ACI-318-83 SECT. 4-5. CEMENT MORTAR SHALL BE IN ACCORDANCE WITH CON EDISON CO. SPEC. EO-100-167. ALL REINFORCING BARS SHALL HAVE 2" MINIMUM CONCRETE PROTECTION UNLESS OTHERWISE NOTED.
THE USE OF FORM TIES IS NOT ALLOWED. DO NOT USE FLY ASH OR SLAG IN CONCRETE. FLOOR AND EXTERIOR WALLS SHALL BE POURED CONTINUOUSLY UP TO THE HORIZONTAL WALL KEYS TO FORM MONOLITHIC STRUCTURE.
INSTALL 2 NO. 5 BARS ABOVE ALL WALL OPENINGS.

SPECIAL INSPECTION
-STRUCTURAL STEEL-WELDING - 1704.3.1
-STRUCTURAL STEEL-ERECTION & BOLTING - 1704.3.3
-STRUCTURAL COLD-FORMED STEEL - 1704.3.4
-CONCRETE-CAST-IN-PLACE - 1704.4
-CONCRETE-PRE CAST - 1704.4
-CONCRETE-PRE STRESSED - 1704.4
-CONCRETE TEST CYLINDERS * (TR-2) - 1905.6
-CONCRETE DESIGN MIX * (TR-3) - 1905.3
-MASONRY - 1704.5
-SOILS-SITE PREPARATION - 1704.7.1
-SOILS-FILL PLACEMENT & IN-PLACE DENSITY - 1704.7.2 & 1704.7.3
-SOILS-INVESTIGATIONS (BORINGS/TEST PITS) (TR-4) - 1704.7.4
-PILE FOUNDATIONS & DRILLED PIER INSTALLATION (TR-5) - 1704.8
-STRUCTURAL SAFETY-STRUCTURAL STABILITY - 1704.19
-EXCAVATION-SHEETING, SHORING & BRACING - 1704.19 & 3304.4.1

PROGRESS INSPECTION
-FINAL -28-116.2.4.2 & 109.5 & DIRECTIVE 14 (1975)

*THESE TESTS MUST BE PERFORMED BY A LICENSED CONCRETE TESTING LAB

DO NOT SCALE THIS DRAWING
USE DIMENSIONS AS SHOWN
COMPUTER GENERATED DRAWING
NOT TO BE HAND REVISED

KEY PLAN:

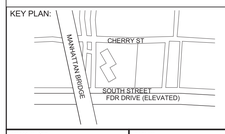

PROJECT NORTH | TRUE NORTH

DEVELOPER:
EXTELL DEVELOPMENT COMPANY
805 Third Ave, 7th Floor
New York, NY 10022
TEL: 212-712-6000 FAX: 212-712-6100

ARCHITECT OF RECORD:
AAI ARCHITECTS, P.C.
14 Wall Street, 2nd Floor
New York, NY 10005
TEL: 212-964-4040 FAX: 212-964-4090

INTERIOR DESIGNER:
MEYER DAVIS
180 Varick St, suite 404
New York, NY 10014
TEL: 212-627-5574

LANDSCAPE DESIGNER:
WEST 8 URBAN DESIGN & LANDSCAPE ARCHITECTURE P.C.
333 Hudson Street, Suite 905
New York, NY 10013
TEL: 212-285-0088 FAX: 212-285-0228

STRUCTURAL ENGINEERS:
WSP
228 East 45th Street
New York, NY 10017
TEL: 212-687-9888 FAX: 646-487-5501

MEP ENGINEERS:
ICOR ASSOCIATES, LLC
485 C Route 1 South, Suite 200
Iseline, NJ 08830
TEL: 908-272-3300 FAX: 908-272-4440

GEOTECHNICAL ENGINEERS:
LANGAN ENGINEERING & ENVIRONMENTAL SERVICES
21 Penn Plaza - 360 West 31st Street, 8th Floor
New York, NY 10001
TEL: 212.479.5400 FAX: 212.479.5444

No.	DESCRIPTION:	DATE:
1	ADDENDUM #5	05-01-15
2	ADDENDUM #10	07-20-15
3	ISSUED FOR FILING	07-28-15

Discrepancies must be reported immediately to the Architect before proceeding. Only figured dimensions are to be used. Contractors must check all dimensions on site. This drawing is protected by copyright.

ALL DIMENSIONS ARE SHOWN IN IMPERIAL.

CONSULTANT: WSP

PROJECT:
250 SOUTH STREET
NEW YORK, NY

DRAWING TITLE:
CON-ED TRANSFORMER WALL PLAN SECTIONS

SEAL & SIGNATURE: STATE OF NEW YORK ANMAD RAHMAN No. 095051 LICENSED PROFESSIONAL ENGINEER

DATE:	04/30/15
PROJECT No:	1302510
DRAWN: CAD	REV:
CHK: CL	
SCALE: As indicated	
DWG No:	SCE-1.00
DOB PAGE No:	of

DOB EMPLOYEE STAMP: Damian Titus — Buildings — APPROVED — Under Directive 2 of 1975 — AMENDED APPLICATION — Date: 10/08/2015 — NYC Development Hub

DOB B-SCAN:

FILE NAME:
PLOT DATE:

DEPT OF BLDGS 121185528 Job Number
ES317016270 Scan Code

1 1ST FLOOR FRAMING PLAN
S-010 SCALE: 1/16" = 1'-0"

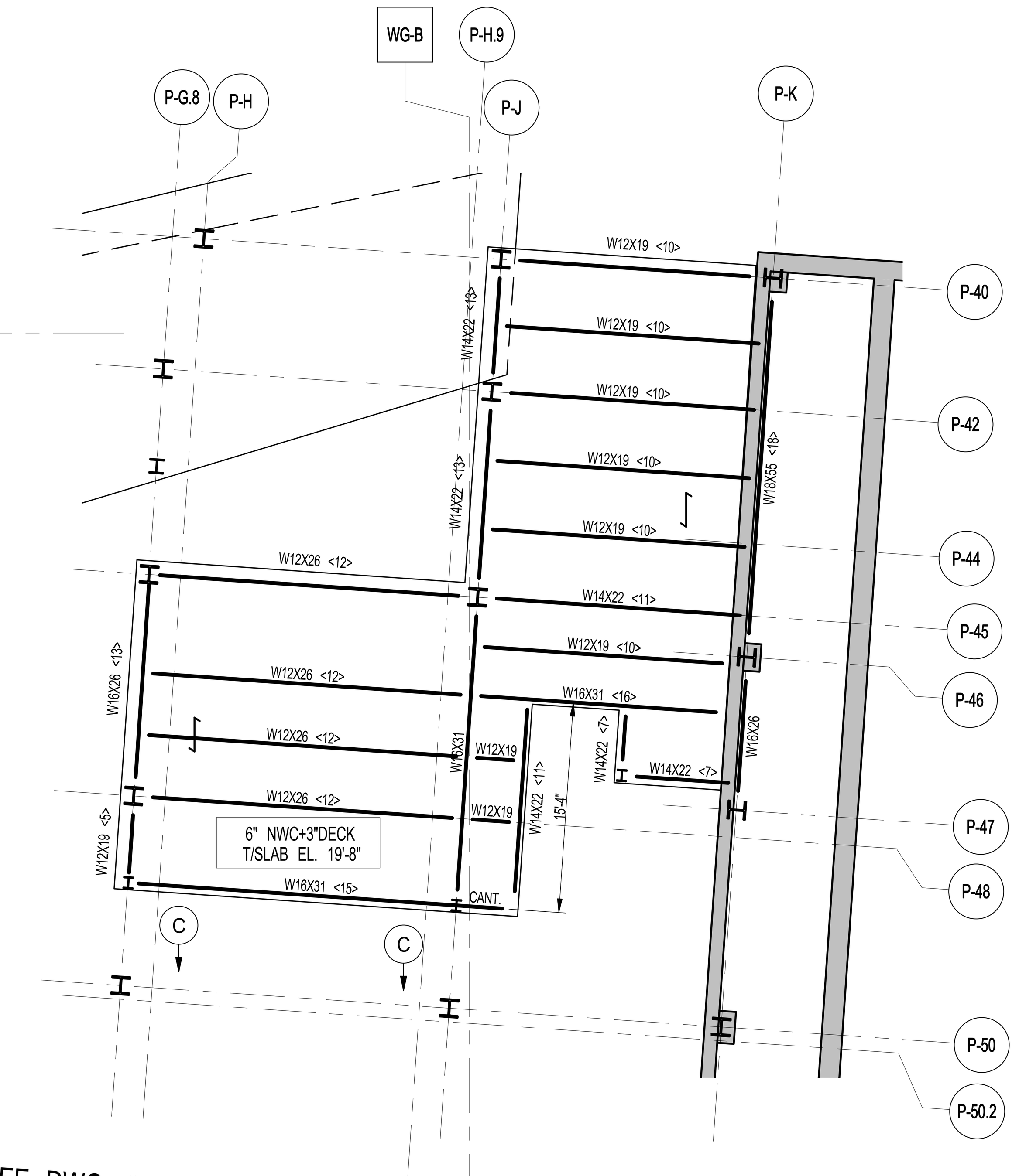

2 PART FRAMING PLAN @ EL. 19'-8"
S-010 SCALE: 1/8" = 1'-0"

NOTE FOR:
PARKING FLOORS, RAMPS, DRIVEWAYS EXPOSED TOPPING, SIDE WALKS - ALL DIRECTLY EXPOSED TO CARS AND/OR PEDESTRIAN TRAFFIC.
1. DCI (CALCIUM NITRITE) CORROSION INHIBITOR, (4.0 GAL/YD3)
2. WATER/CEMENT RATIO NOT TO EXCEED 0.40
3. USE OF SUPERPLASTICIZER TO ACHIEVE THE W/C RATIO.
4. CONCRETE TO CONTAIN SILICIA FUME (5% OF TOTAL CEMENT) OR SLAG (40%)
5. 1.5 LBS/YD3 FIBER MESH.
6. ENTRAINED AIR AT 6% ± 1.
7. ALL TOP & BOTTOM REBAR SHALL BE EPOXY COATED.
8. ALL CONSTRUCTION JOINTS SHALL HAVE WATER STOP AS PER DETAIL ON S-962.
9. THE CURING SHALL BE ONLY MOIST TYPE. NO CURING COMPOUND ACCEPTABLE.
10. ALTHOUGH PROTECTIVE MEASURES WERE INCORPORATED IN THE DESIGN OF THE PARKING AREAS AND RAMPS, THESE AREAS MUST BE CAREFULLY MAINTAINED IN ORDER TO PREVENT EARLY DETERIORATION.

NOTES:

1. TOP OF SLAB ELEVATION TO BE 13'-5" U.O.N. THUS ...... ON PLAN.
2. SLAB TO BE 12" THICK U.O.N. THUS ...... ON PLAN.
3. CONCRETE STRENGTH f'c, OF SLAB SHALL BE 8,600 psi
4. BOTTOM REINFORCEMENT TO BE: #5@12 CONT. E.W. FOR 12" SLAB, 14" SLAB AND 16" SLAB
   #6@12 EW. FOR 20" SLAB.
5. LOCATION AND QUANITITY OF SLEEVES, FLOOR DRAINS, WALL PENETRATIONS, ETC TO BE COORDINATED WITH ARCH. AND MECH. DRAWINGS
6. FOR SIZE AND LOCATION OF CURBS SEE ARCH. DWGS. FOR REINF. SEE TYPICAL DETAILS ON S-967.
7. PROVIDE HOUSEKEEPING PADS BENEATH MECHANICAL EQUIPMENT AS REQUIRED. COORDINATE SIZE, THICKNESS AND LOCATION WITH MECHANICAL DRAWINGS. SEE TYPICAL DETAIL ON S-967.
8. * INDICATES SEISMIC / WIND BARS.
9. FOR DETAILS OF INTEGRITY REINFORCEMENT, SEE DWG. S-965
10. FOR DEPRESSION @ BUILDING PERIMETER (SPANDREL DETAIL) SEE S-965.
11. FOR SHEARWALL DETAILS ELEVATION AND REINFORCEMENT SEE S-800 AND S-940 SERIES DWG'S.
12. FOR COLUMN SCHEDULE AND DETAILS SEE S-950 SERIES DWG'S.
13. FOR TYPICAL SUPERSTRUCTURE DETAILS SEE S-960 SERIES DWG'S
14. FOR SUPERSTRUCTURE SECTIONS SEE S-970 SERIES DRAWINGS.
15. FOR STAIR SECTIONS AND TYPICAL DETAIL SEE S-980 SERIES DRAWINGS.
16. ALL REINF. AT EXPOSED CONCRETE ELEMENTS (COLUMNS, WALLS, BEAMS, SLAB & TIES) SHALL BE EPOXY COATED. REBARS IN SWIMMING POOL REGION (BEAM & SLAB ABOVE THE POOL, WALL, BEAM & SLAB @ SIDE OF POOL) SHALL BE EPOXY COATED.
17. FOR GENERAL NOTES AND LEGEND SEE FO-001 AND FO-002.

1ST FLOOR BEAM SCHEDULE

BEAM MARK	SIZE		REINFORCEMENT		STIRRUPS			REMARKS
	WIDTH	DEPTH	BOTTOM CONTINUOUS	TOP CONTINUOUS	TYPE	SIZE	SPACING	
1B1	26	36	6-#9	6-#11	2	#4	@10	
1B2	26	24	4-#10	4-#10	2	#4	@10	
1B4	30	36			2	#4		
1B5	12	24	2-#11	2-#11	1	#4	@6	
1B6	24	69	4-#8	4-#8	1	#4	@12	#4@10 HORIZ. E.F., CONT.
1B7	24	50	6-#11	6-#9	1	#4	@10	#4@10 HORIZ. E.F., CONT.
1B8	12	24	2-#9	2-#9	1	#4	@10	
1B9	12	24	3-#11	2-#11	1	#4	@10	
1B10	14	12	2-#6	2-#6	1	#4	@5	
1B11	24	24	3-#9	3-#11	1	#4	@10	
1B14	12	18	2-#9	2-#9	1	#4	@8	

ADD'L STEEL FRAMING NOTES:

1. COMPOSITE SLAB CONSTRUCTION SHALL BE 6 " NORMAL WEIGHT CONCRETE ON TOP OF 3" DEEP 18GA (Fy=50 KSI) COMPOSITE GALVANIZED METAL DECK (TOTAL SLAB DEPTH= 9"), REINFORCED WITH #5@12 TOP E.W. + #4@12 BOTTTOM (FLUTE) (CONCRETE f'c=4000psi AT 28 DAYS) U.O.N.
2. TOP OF STEEL TO BE 9" BELOW TOP OF SLAB ELEVATION SPECIFIED IN NOTE 1 U.O.N. THUS (±...) INDICATING DISTANCE ABOVE OR BELOW TOP OF SLAB ELEVATION.
3. STUDS SHALL BE ¾"Ø x 5" LONG. ALL STEEL BEAMS SHALL HAVE MIN. 1 STUD/FT. U.O.N. THUS <...> ON PLAN.
4. ALL BEAM CONNECTIONS SHALL DEVELOP AXIAL FORCE OF P=75k, GIRDERS (SUPPORTING OTHER MEMBERS) P=150K AT EACH END U.O.N. ON PLAN, IN ADDITION TO ALL OTHER LOADS.
5. FOR BEAM REACTIONS NOT SHOWN USE A MINIMUM OF 30 KIPS FOR BEAMS LESS THAN 15 FEET LONG.

LEGEND:

TEx - INDICATES EMBEDMENT PLATE REQUIRED FOR STEEL BEAM CONNECTION TO CONCRETE COLUMN

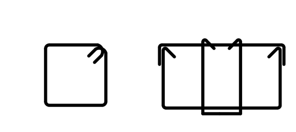

STIRRUP TYPES

KEY PLAN:

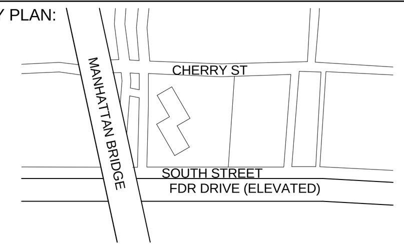

PROJECT NORTH
TRUE NORTH

DEVELOPER:
EXTELL DEVELOPMENT COMPANY
805 Third Ave, 7th Floor
New York, NY 10022
TEL: 212-712-6000 FAX: 212-712-6100

ARCHITECT OF RECORD:
AAI ARCHITECTS, P.C.
14 Wall Street, 2nd Floor
New York, NY 10005
TEL: 212-964-4040 FAX: 212-964-4090

INTERIOR DESIGNER:
MEYER DAVIS
180 Varick St, suite 404
New York, NY 10014
TEL: 212-627-5574

LANDSCAPE DESIGNER:
WEST 8 URBAN DESIGN & LANDSCAPE ARCHITECTURE P.C.
333 Hudson Street, Suite 905
New York, NY 10013
TEL: 212-285-0088 FAX: 212-285-0228

STRUCTURAL ENGINEERS:
WSP
228 East 45th Street
New York, NY 10017
TEL: 212-687-9888 FAX: 646-487-5501

MEP ENGINEERS:
ICOR ASSOCIATES, LLC
485 C Route 1 South, Suite 200
Iseline, NJ 08830
TEL: 908-272-3300 FAX: 908-272-4440

GEOTECHNICAL ENGINEERS:
LANGAN ENGINEERING & ENVIRONMENTAL SERVICES
21 Penn Plaza - 360 West 31st Street, 8th Floor
New York, NY 10001
TEL: 212.479.5400 FAX: 212.479.5444

No.	DESCRIPTION:	DATE:
1	50% SD	02-28-14
2	100%SD	04-25-14
3	ISSUED FOR DOT	04-28-14
4	FOUNDATION FILING	06-10-14
5	50% DD	08-01-14
6	DESIGN DEVELOPMENT	10-07-14
7	ISSUED FOR FILING	02-13-15
8	STEEL BID PACKAGE	02-24-15
9	CONCRETE BID PACKAGE	03-06-15
10	ISSUED FOR FILING	03-26-15

Discrepancies must be reported immediately to the Architect before proceeding. Only figured dimensions are to be used. Contractors must check all dimensions on site. This drawing is protected by copyright.

ALL DIMENSIONS ARE SHOWN IN IMPERIAL.

CONSULTANT:
AAI ARCHITECTS, P.C.

PROJECT:
250 SOUTH STREET
NEW YORK, NY

DRAWING TITLE:
1ST FLOOR OVERALL FRAMING PLAN

SEAL & SIGNATURE:
STATE OF NEW YORK AHMAD RAHIMIAN No. 065537 LICENSED PROFESSIONAL ENGINEER

DATE:	02/28/14
PROJECT No:	1302510
DRAWN:	CAD
CHK:	CL
REV:	
SCALE:	
DWG No:	S-010.00
DOB PAGE No:	of

DOB EMPLOYEE STAMP:
Damian Titus
Buildings
APPROVED
Under Directive 2 of 1975
Date: 05/21/2015:
NYC Development Hub

DOB B-SCAN:

30" x 42" Arch E1 - SHEET SIZE
FILE NAME:
PLOT DATE:

DEPT OF BLDGS 121185569 Job Number
E 5665204136 Scan Code
30" x 42" Arch E1 SHEET SIZE

1 S-011 — 1ST FLOOR FRAMING PLAN - PART 1
SCALE: 3/16" = 1'-0"

FILE NAME:
PLOT DATE:

KEY PLAN:

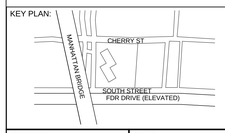

PROJECT NORTH

TRUE NORTH

DEVELOPER:
EXTELL DEVELOPMENT COMPANY
805 Third Ave, 7th Floor
New York, NY 10022
TEL: 212-712-6000 FAX: 212-712-6100

ARCHITECT OF RECORD:
AAI ARCHITECTS, P.C.
14 Wall Street, 2nd Floor
New York, NY 10005
TEL: 212-964-4040 FAX: 212-964-4090

INTERIOR DESIGNER:
MEYER DAVIS
180 Varick St, suite 404
New York, NY 10014
TEL: 212-627-5574

LANDSCAPE DESIGNER:
WEST 8 URBAN DESIGN & LANDSCAPE ARCHITECTURE P.C.
333 Hudson Street, Suite 905
New York, NY 10013
TEL: 212-285-0088 FAX: 212-285-0228

STRUCTURAL ENGINEERS:
WSP
228 East 45th Street
New York, NY 10017
TEL: 212-687-9888 FAX: 646-487-5501

MEP ENGINEERS:
ICOR ASSOCIATES, LLC
485 C Route 1 South, Suite 200
Iseline, NJ 08830
TEL: 908-272-3300 FAX: 908-272-4440

GEOTECHNICAL ENGINEERS:
LANGAN ENGINEERING & ENVIRONMENTAL SERVICES
21 Penn Plaza - 360 West 31st Street, 8th Floor
New York, NY 10001
TEL: 212.479.5400 FAX: 212.479.5444

No.	DESCRIPTION:	DATE:
1	DESIGN DEVELOPMENT	10-07-14
2	STEEL BID PACKAGE	02-24-15
3	CONCRETE BID PACKAGE	03-06-15
4	ISSUED FOR FILING	03-26-15

Discrepancies must be reported immediately to the Architect before proceeding. Only figured dimensions are to be used. Contractors must check all dimensions on site. This drawing is protected by copyright.

ALL DIMENSIONS ARE SHOWN IN IMPERIAL.

CONSULTANT:
AAI ARCHITECTS, P.C.

PROJECT:
250 SOUTH STREET
NEW YORK, NY

DRAWING TITLE:
1ST FLOOR FRAMING PLAN - PART 1

SEAL & SIGNATURE:

DATE:	03/03/14	
PROJECT No:	1302510	
DRAWN:	CAD	REV:
CHK:	CL	
SCALE:		
DWG No:	S-011.00	
DOB PAGE No:	of	

DOB EMPLOYEE STAMP:

Damian Titus
BuildingConnected
APPROVED
Under Directive 2 of 1975
Date: 05/21/2015:
NYC Development Hub

DOB B-SCAN:

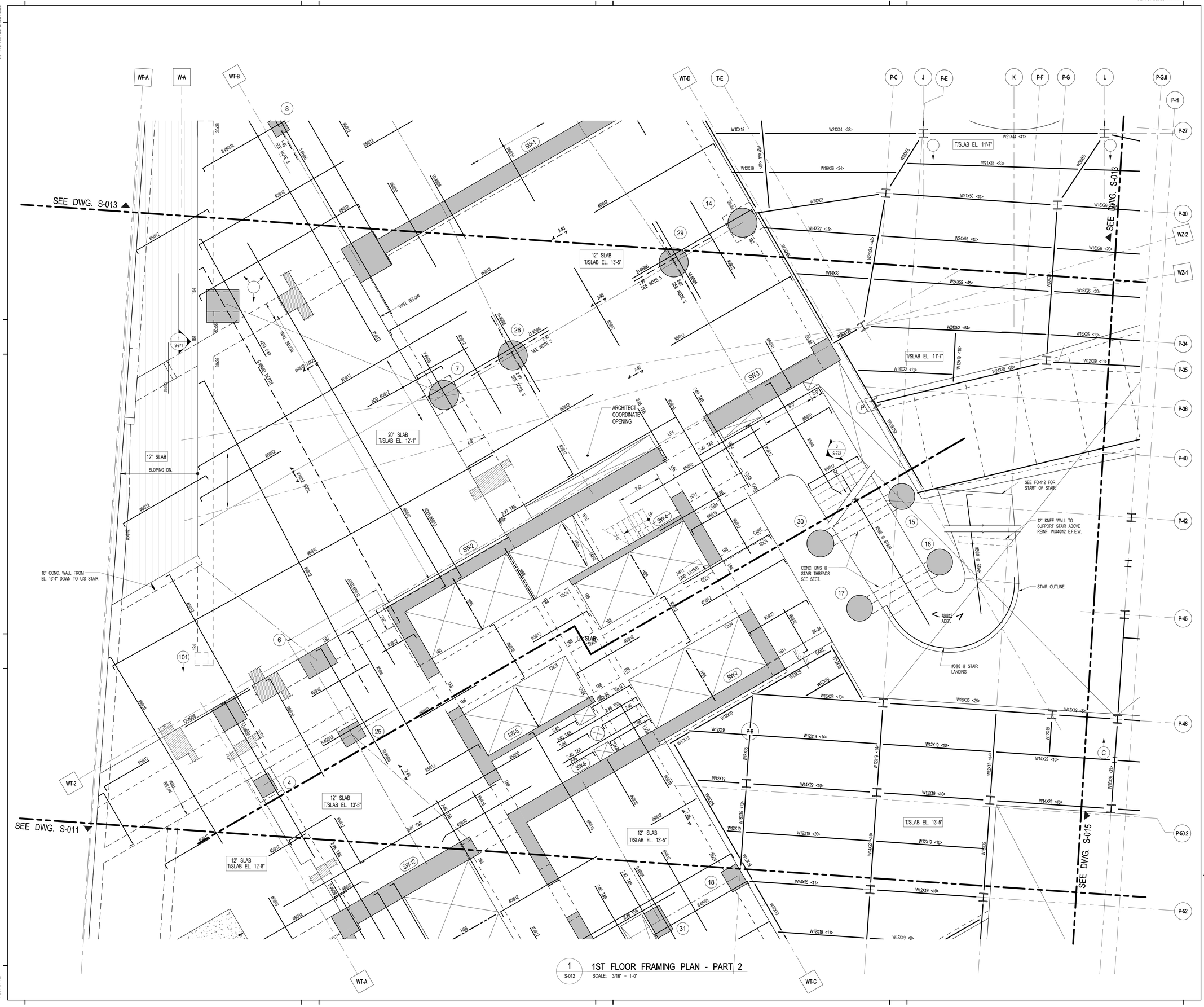

1 S-012 1ST FLOOR FRAMING PLAN - PART 2
SCALE: 3/16" = 1'-0"

KEY PLAN:

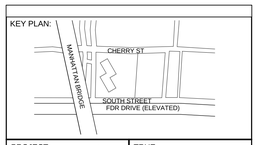

PROJECT NORTH | TRUE NORTH

DEVELOPER:
EXTELL DEVELOPMENT COMPANY
805 Third Ave, 7th Floor
New York, NY 10022
TEL: 212-712-6000 FAX: 212-712-6100

ARCHITECT OF RECORD:
AAI ARCHITECTS, P.C.
14 Wall Street, 2nd Floor
New York, NY 10005
TEL: 212-964-4040 FAX: 212-964-4090

INTERIOR DESIGNER:
MEYER DAVIS
180 Varick St, suite 404
New York, NY 10014
TEL: 212-627-5574

LANDSCAPE DESIGNER:
WEST 8 URBAN DESIGN & LANDSCAPE ARCHITECTURE P.C.
333 Hudson Street, Suite 905
New York, NY 10013
TEL: 212-285-0088 FAX: 212-285-0228

STRUCTURAL ENGINEERS:
WSP
228 East 45th Street
New York, NY 10017
TEL: 212-687-9888 FAX: 646-487-5501

MEP ENGINEERS:
ICOR ASSOCIATES, LLC
485 C Route 1 South, Suite 200
Iseline, NJ 08830
TEL: 908-272-3300 FAX: 908-272-4440

GEOTECHNICAL ENGINEERS:
LANGAN ENGINEERING & ENVIRONMENTAL SERVICES
21 Penn Plaza - 360 West 31st Street, 8th Floor
New York, NY 10001
TEL: 212.479.5400 FAX: 212.479.5444

No.	DESCRIPTION:	DATE:
1	DESIGN DEVELOPMENT	10-07-14
2	STEEL BID PACKAGE	02-24-15
3	CONCRETE BID PACKAGE	03-06-15
4	ISSUED FOR FILING	03-26-15

Discrepancies must be reported immediately to the Architect before proceeding. Only figured dimensions are to be used. Contractors must check all dimensions on site. This drawing is protected by copyright.

ALL DIMENSIONS ARE SHOWN IN IMPERIAL.

CONSULTANT:
AAI ARCHITECTS, P.C.

PROJECT:
250 SOUTH STREET
NEW YORK, NY

DRAWING TITLE:
1ST FLOOR FRAMING PLAN - PART 2

SEAL & SIGNATURE:
STATE OF NEW YORK
AHMAD RAHIMIAN
No. 085537
LICENSED PROFESSIONAL ENGINEER

DATE:	03/03/14
PROJECT No:	1302510
DRAWN: CAD	REV:
CHK: CL	
SCALE:	
DWG No:	S-012.00
DOB PAGE No:	of

DOB EMPLOYEE STAMP:
Damian Titus
Buildings
APPROVED
Under Directive 2 of 1975
Date: 05/22/2015:
NYC Development Hub

DOB B-SCAN:

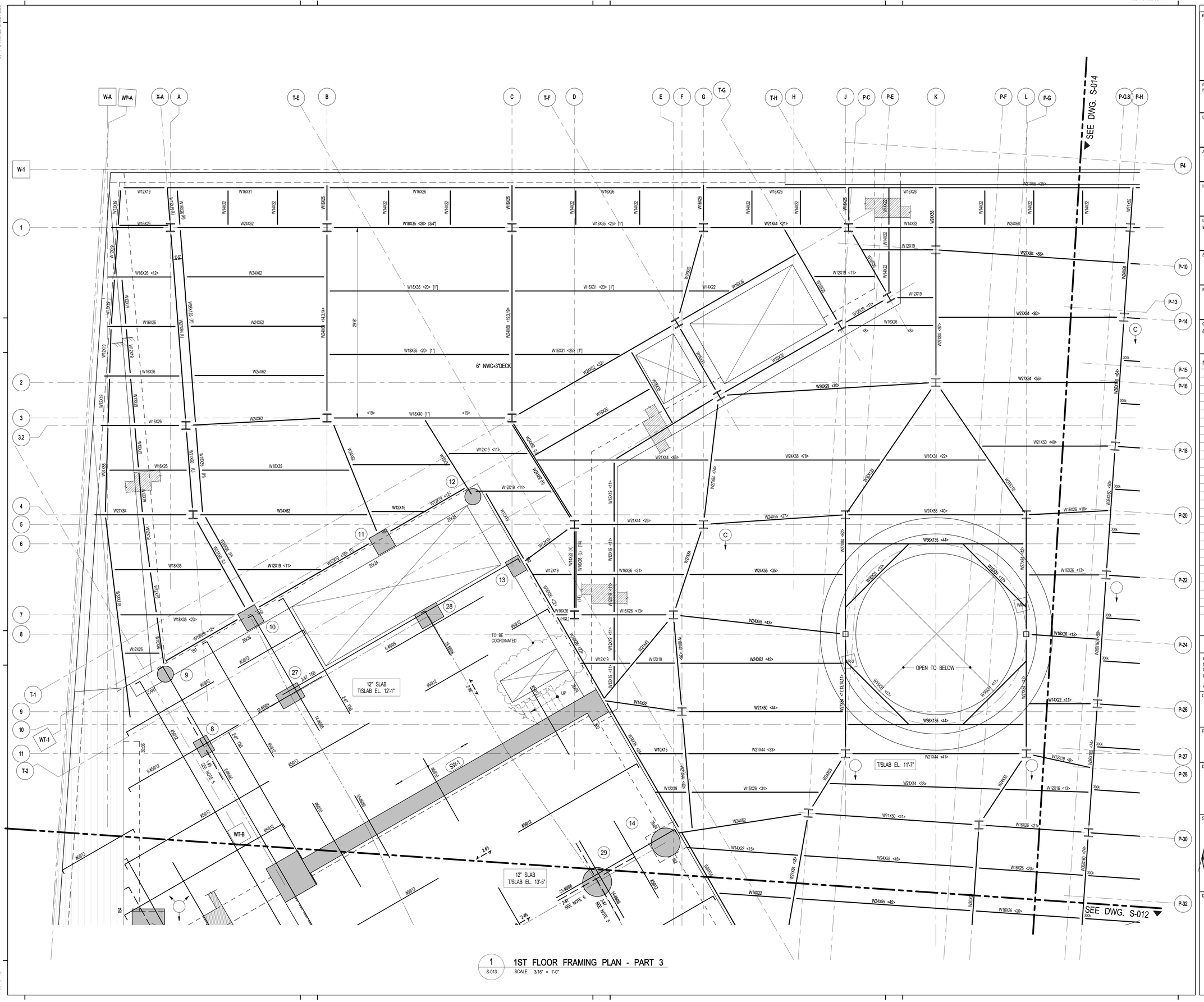

1 S-013 1ST FLOOR FRAMING PLAN - PART 3
SCALE: 3/16" = 1'-0"

KEY PLAN:

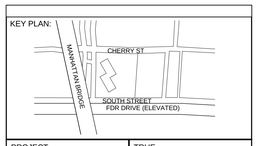

PROJECT NORTH

TRUE NORTH

DEVELOPER:
EXTELL DEVELOPMENT COMPANY
805 Third Ave, 7th Floor
New York, NY 10022
TEL: 212-712-6000 FAX: 212-712-6100

ARCHITECT OF RECORD:
AAI ARCHITECTS, P.C.
14 Wall Street, 2nd Floor
New York, NY 10005
TEL: 212-964-4040 FAX: 212-964-4090

INTERIOR DESIGNER:
MEYER DAVIS
180 Varick St, suite 404
New York, NY 10014
TEL: 212-627-5574

LANDSCAPE DESIGNER:
WEST 8 URBAN DESIGN & LANDSCAPE ARCHITECTURE P.C.
333 Hudson Street, Suite 905
New York, NY 10013
TEL: 212-285-0088 FAX: 212-285-0228

STRUCTURAL ENGINEERS:
WSP
228 East 45th Street
New York, NY 10017
TEL: 212-687-9888 FAX: 646-487-5501

MEP ENGINEERS:
ICOR ASSOCIATES, LLC
485 C Route 1 South, Suite 200
Iseline, NJ 08830
TEL: 908-272-3300 FAX: 908-272-4440

GEOTECHNICAL ENGINEERS:
LANGAN ENGINEERING & ENVIRONMENTAL SERVICES
21 Penn Plaza - 360 West 31st Street, 8th Floor
New York, NY 10001
TEL: 212.479.5400 FAX: 212.479.5444

No.	DESCRIPTION:	DATE:
1	DESIGN DEVELOPMENT	10-07-14
2	STEEL BID PACKAGE	02-24-15
3	Revision 22	Date 22
4	CONCRETE BID PACKAGE	03-06-15
4	ISSUED FOR FILING	03-26-15

Discrepancies must be reported immediately to the Architect before proceeding. Only figured dimensions are to be used. Contractors must check all dimensions on site. This drawing is protected by copyright.

ALL DIMENSIONS ARE SHOWN IN IMPERIAL.

CONSULTANT:
AAI ARCHITECTS, P.C.

PROJECT:
250 SOUTH STREET
NEW YORK, NY

DRAWING TITLE:
1ST FLOOR FRAMING PLAN - PART 3

SEAL & SIGNATURE:
STATE OF NEW YORK
AHMAD RAHIMIAN
No. 085557
LICENSED PROFESSIONAL ENGINEER

DATE:	03/03/14
PROJECT No:	1302510
DRAWN: CAD	REV:
CHK: CL	
SCALE:	
DWG No:	S-013.00
DOB PAGE No:	of

DOB EMPLOYEE STAMP:
Damian Titus
Buildings
APPROVED
Under Directive 2 of 1975
Date: 05/21/2015:
NYC Development Hub

DOB B-SCAN:

DEPT OF BLDGS121305539 Job Number
E1505024S035 Scan Code

30" x 42" Arch E1 SHEET SIZE

1 S-014 1ST FLOOR FRAMING PART PLAN 4
SCALE: 3/16" = 1'-0"

PROGRESS PRINT 02-17-15

FILE NAME:
PLOT DATE:

KEY PLAN:

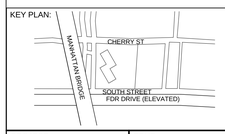

PROJECT NORTH

TRUE NORTH

DEVELOPER:
EXTELL DEVELOPMENT COMPANY
805 Third Ave, 7th Floor
New York, NY 10022
TEL: 212-712-6000 FAX: 212-712-6100

ARCHITECT OF RECORD:
AAI ARCHITECTS, P.C.
14 Wall Street, 2nd Floor
New York, NY 10005
TEL: 212-964-4040 FAX: 212-964-4090

INTERIOR DESIGNER:
MEYER DAVIS
180 Varick St, suite 404
New York, NY 10014
TEL: 212-627-5574

LANDSCAPE DESIGNER:
WEST 8 URBAN DESIGN & LANDSCAPE ARCHITECTURE P.C.
333 Hudson Street, Suite 905
New York, NY 10013
TEL: 212-285-0088 FAX: 212-285-0228

STRUCTURAL ENGINEERS:
WSP
228 East 45th Street
New York, NY 10017
TEL: 212-687-9888 FAX: 646-487-5501

MEP ENGINEERS:
ICOR ASSOCIATES, LLC
485 C Route 1 South, Suite 200
Iseline, NJ 08830
TEL: 908-272-3300 FAX: 908-272-4440

GEOTECHNICAL ENGINEERS:
LANGAN ENGINEERING & ENVIRONMENTAL SERVICES
21 Penn Plaza - 360 West 31st Street, 8th Floor
New York, NY 10001
TEL: 212.479.5400 FAX: 212.479.5444

No.	DESCRIPTION:	DATE:
1	DESIGN DEVELOPMENT	10-07-14
2	STEEL BID PACKAGE	02-24-15
3	ISSUED FOR FILING	03-26-15

Discrepancies must be reported immediately to the Architect before proceeding. Only figured dimensions are to be used. Contractors must check all dimensions on site. This drawing is protected by copyright.

ALL DIMENSIONS ARE SHOWN IN IMPERIAL.

CONSULTANT:
AAI ARCHITECTS, P.C.

PROJECT:
250 SOUTH STREET
NEW YORK, NY

DRAWING TITLE:
1ST FLOOR FRAMING PLAN - PART 4

SEAL & SIGNATURE:
STATE OF NEW YORK · AHMAD RAHIMIAN · LICENSED PROFESSIONAL ENGINEER · No. 085557

DATE:		03/03/14
PROJECT No:		1302510
DRAWN:	CAD	REV:
CHK:	CL	
SCALE:		
DWG No:		**S-014.00**
DOB PAGE No:	of	

DOB EMPLOYEE STAMP:
Damian Titus
Buildings
APPROVED
Under Directive 2 of 1975
Date: 05/21/2015:
NYC Development Hub

DOB B-SCAN:

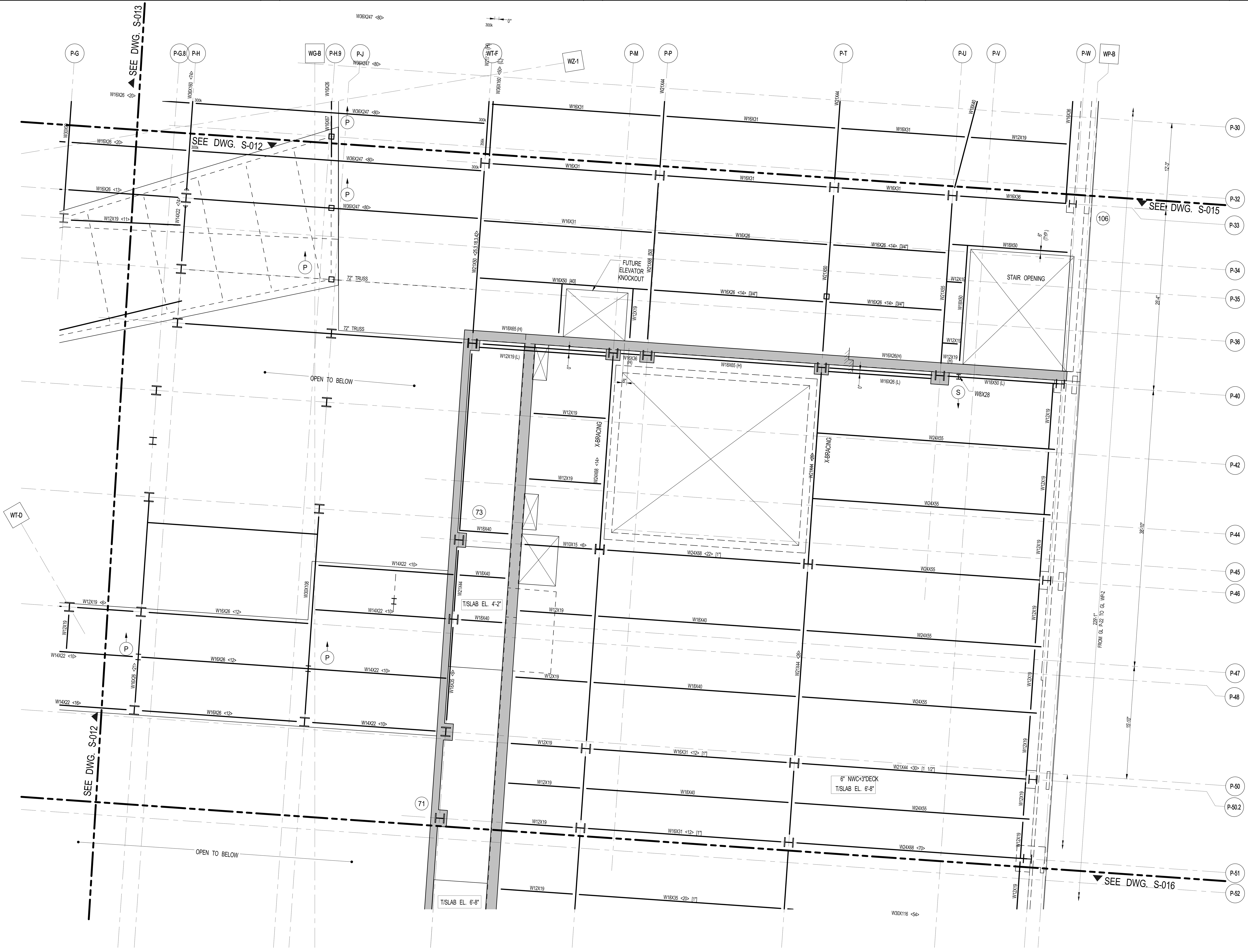

1 1ST FLOOR FRAMING PART PLAN 5

S-015

SCALE: 3/16" = 1'-0"

KEY PLAN:

CHERRY ST
SOUTH STREET
FDR DRIVE (ELEVATED)
MANHATTAN BRIDGE

PROJECT NORTH

TRUE NORTH

DEVELOPER:

EXTELL DEVELOPMENT COMPANY
805 Third Ave, 7th Floor
New York, NY 10022
TEL: 212-712-6000 FAX: 212-712-6100

ARCHITECT OF RECORD:

AAI ARCHITECTS, P.C.
14 Wall Street, 2nd Floor
New York, NY 10005
TEL: 212-964-4040 FAX: 212-964-4090

INTERIOR DESIGNER:

MEYER DAVIS
180 Varick St, suite 404
New York, NY 10014
TEL: 212-627-5574

LANDSCAPE DESIGNER:

WEST 8 URBAN DESIGN & LANDSCAPE ARCHITECTURE P.C.
333 Hudson Street, Suite 905
New York, NY 10013
TEL: 212-285-0088 FAX: 212-285-0228

STRUCTURAL ENGINEERS:

WSP
228 East 45th Street
New York, NY 10017
TEL: 212-687-9888 FAX: 646-487-5501

MEP ENGINEERS:

ICOR ASSOCIATES, LLC
485 C Route 1 South, Suite 200
Iseline, NJ 08830
TEL: 908-272-3300 FAX: 908-272-4440

GEOTECHNICAL ENGINEERS:

LANGAN ENGINEERING & ENVIRONMENTAL SERVICES
21 Penn Plaza - 360 West 31st Street, 8th Floor
New York, NY 10001
TEL: 212.479.5400 FAX: 212.479.5444

No.	DESCRIPTION:	DATE:
1	DESIGN DEVELOPMENT	10-07-14
2	STEEL BID PACKAGE	02-24-15
3	ISSUED FOR FILING	03-26-15

Discrepancies must be reported immediately to the Architect before proceeding. Only figured dimensions are to be used. Contractors must check all dimensions on site. This drawing is protected by copyright.

ALL DIMENSIONS ARE SHOWN IN IMPERIAL.

CONSULTANT:

AAI ARCHITECTS, P.C.

PROJECT:

250 SOUTH STREET
NEW YORK, NY

DRAWING TITLE:

1ST FLOOR FRAMING PLAN - PART 5

SEAL & SIGNATURE:

STATE OF NEW YORK — AHMAD RAHIMIAN — LICENSED PROFESSIONAL ENGINEER

DATE:	03/03/14
PROJECT No:	1302510
DRAWN: CAD	REV:
CHK: CL	
SCALE:	
DWG No:	**S-015.00**
DOB PAGE No:	of

DOB EMPLOYEE STAMP:

DOB B-SCAN:

Damian Titus
NYC Buildings
APPROVED
Under Directive 2 of 1975
Date: 05/21/2015
NYC Development Hub

DEPT OF BLDGS 121185528 Job Number
ES977018244 Scan Code
30" x 42" Arch E1 SHEET SIZE
FILE NAME:
PLOT DATE:

DEPT OF BLDGS 121185528 Job Number

ES914593727 Scan Code

30" x 42" Arch E1 SHEET SIZE

1 / S-016 — 1ST FLOOR FRAMING PART PLAN 6

SCALE: 3/16" = 1'-0"

KEY PLAN:

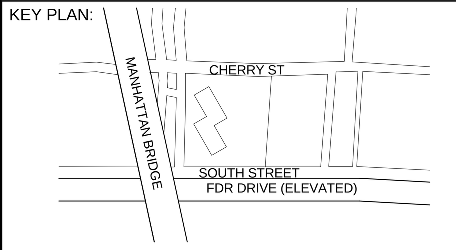

PROJECT NORTH | TRUE NORTH

DEVELOPER:
EXTELL DEVELOPMENT COMPANY
805 Third Ave, 7th Floor
New York, NY 10022
TEL: 212-712-6000 FAX: 212-712-6100

ARCHITECT OF RECORD:
AAI ARCHITECTS, P.C.
14 Wall Street, 2nd Floor
New York, NY 10005
TEL: 212-964-4040 FAX: 212-964-4090

INTERIOR DESIGNER:
MEYER DAVIS
180 Varick St, suite 404
New York, NY 10014
TEL: 212-627-5574

LANDSCAPE DESIGNER:
WEST 8 URBAN DESIGN & LANDSCAPE ARCHITECTURE P.C.
333 Hudson Street, Suite 905
New York, NY 10013
TEL: 212-285-0088 FAX: 212-285-0228

STRUCTURAL ENGINEERS:
WSP
228 East 45th Street
New York, NY 10017
TEL: 212-687-9888 FAX: 646-487-5501

MEP ENGINEERS:
ICOR ASSOCIATES, LLC
485 C Route 1 South, Suite 200
Iseline, NJ 08830
TEL: 908-272-3300 FAX: 908-272-4440

GEOTECHNICAL ENGINEERS:
LANGAN ENGINEERING & ENVIRONMENTAL SERVICES
21 Penn Plaza - 360 West 31st Street, 8th Floor
New York, NY 10001
TEL: 212.479.5400 FAX: 212.479.5444

No.	DESCRIPTION:	DATE:
1	DESIGN DEVELOPMENT	10-07-14
2	STEEL BID PACKAGE	02-24-15
3	ISSUED FOR FILING	03-26-15

Discrepancies must be reported immediately to the Architect before proceeding. Only figured dimensions are to be used. Contractors must check all dimensions on site. This drawing is protected by copyright.

ALL DIMENSIONS ARE SHOWN IN IMPERIAL.

CONSULTANT:

AAI ARCHITECTS, P.C.

PROJECT:

250 SOUTH STREET
NEW YORK, NY

DRAWING TITLE:

1ST FLOOR FRAMING PLAN - PART 6

SEAL & SIGNATURE: STATE OF NEW YORK · AHMAD RAHIMIAN · No. 065537 · LICENSED PROFESSIONAL ENGINEER

DATE:	03/03/14
PROJECT No:	1302510
DRAWN:	CAD
CHK:	CL
REV:	
SCALE:	
DWG No:	**S-016.00**
DOB PAGE No:	of

DOB EMPLOYEE STAMP: Damian Titus — Buildings — APPROVED Under Directive 2 of 1975 — Date: 05/21/2015: — NYC Development Hub

DOB B-SCAN:

FILE NAME:
PLOT DATE:

DEPT OF BLDGS 121185528 Job Number

ES505521165 Scan Code

30" x 42" Arch E1 SHEET SIZE

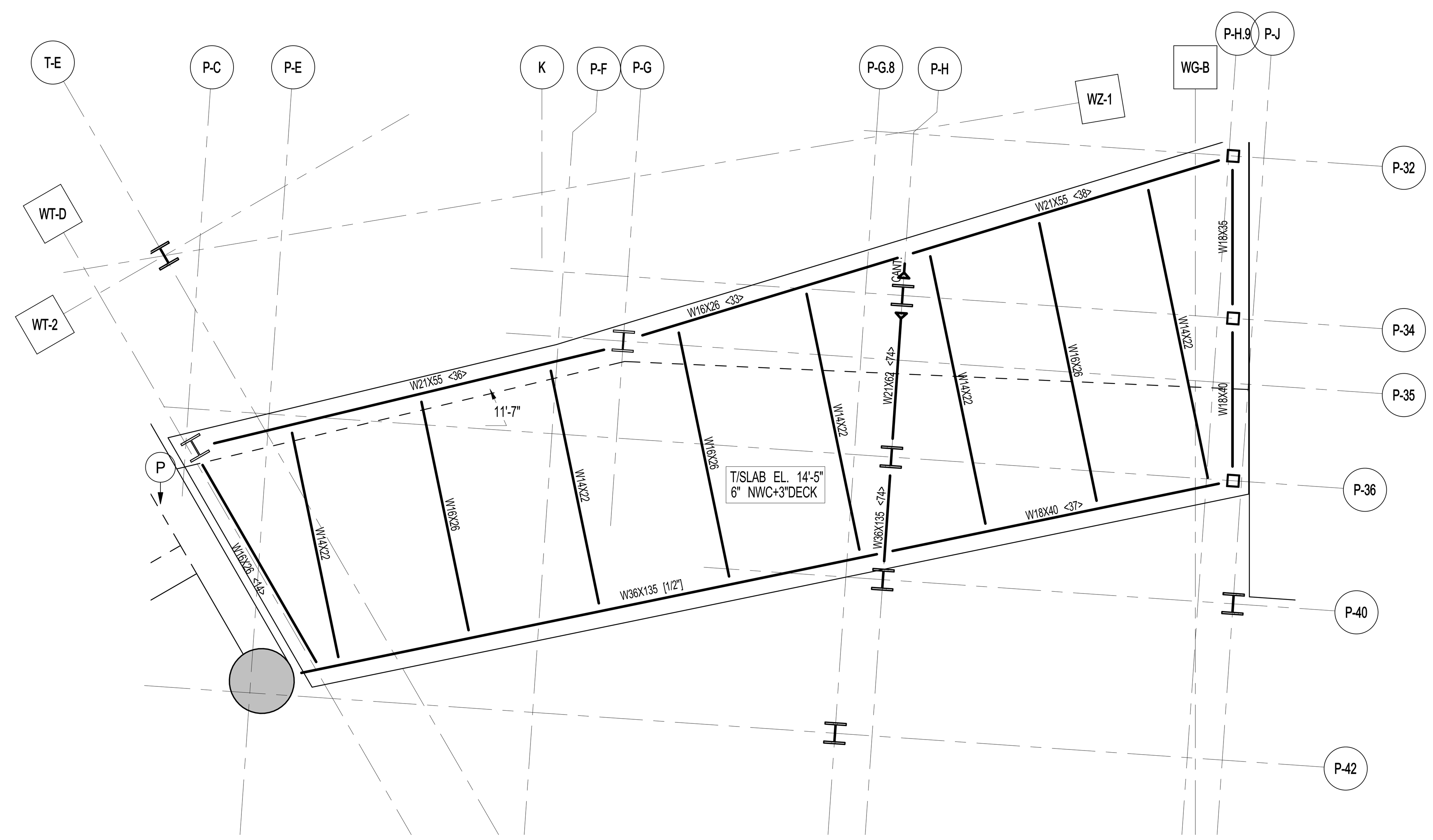

1
S-017
PART FRAMING PLAN AT EL. 14'-5"
SCALE: 3/16" = 1'-0"

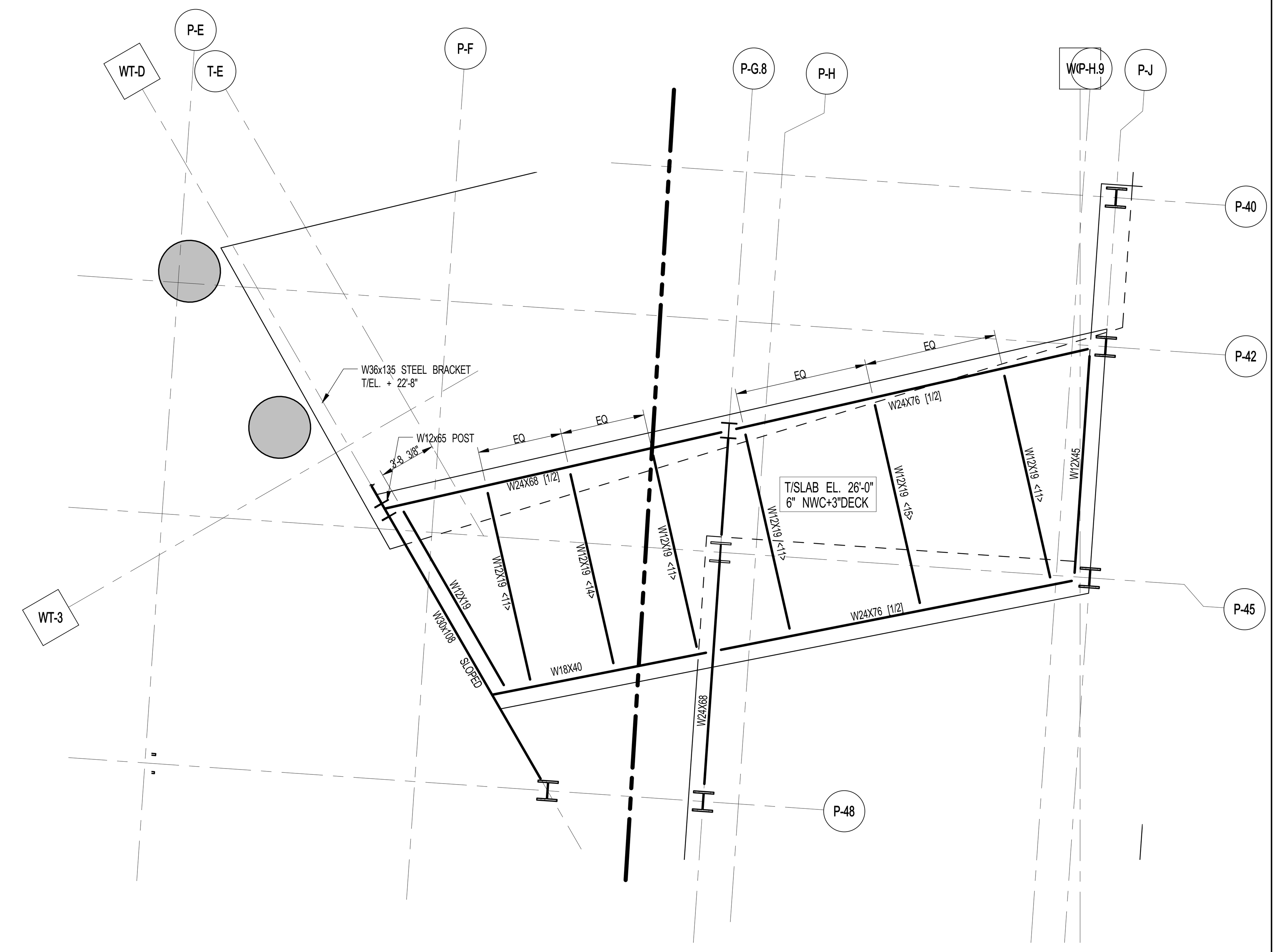

3
S-017
PART FRAMING PLAN AT EL.= 26'-0"
SCALE: 3/16" = 1'-0"

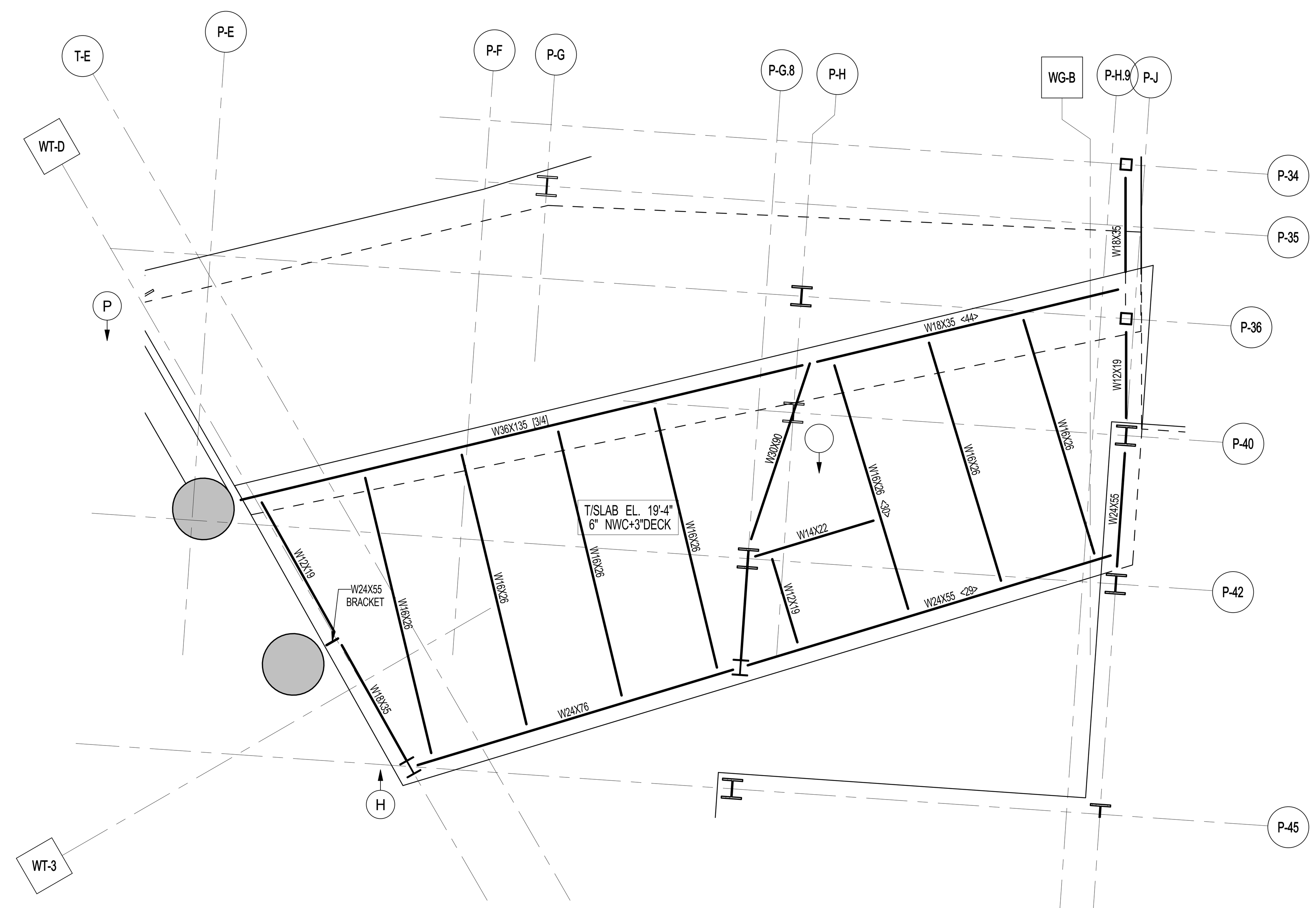

2
S-017
PART FRAMING PLAN AT EL. 19'-4"
SCALE: 3/16" = 1'-0"

KEY PLAN:

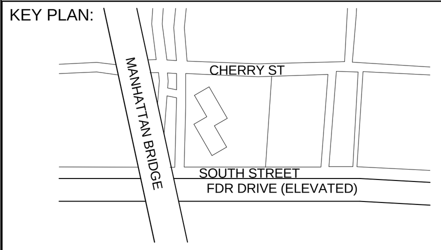

PROJECT NORTH

TRUE NORTH

DEVELOPER:
EXTELL DEVELOPMENT COMPANY
805 Third Ave, 7th Floor
New York, NY 10022
TEL: 212-712-6000 FAX: 212-712-6100

ARCHITECT OF RECORD:
AAI ARCHITECTS, P.C.
14 Wall Street, 2nd Floor
New York, NY 10005
TEL: 212-964-4040 FAX: 212-964-4090

INTERIOR DESIGNER:
MEYER DAVIS
180 Varick St, suite 404
New York, NY 10014
TEL: 212-627-5574

LANDSCAPE DESIGNER:
WEST 8 URBAN DESIGN & LANDSCAPE ARCHITECTURE P.C.
333 Hudson Street, Suite 905
New York, NY 10013
TEL: 212-285-0088 FAX: 212-285-0228

STRUCTURAL ENGINEERS:
WSP
228 East 45th Street
New York, NY 10017
TEL: 212-687-9888 FAX: 646-487-5501

MEP ENGINEERS:
ICOR ASSOCIATES, LLC
485 C Route 1 South, Suite 200
Iseline, NJ 08830
TEL: 908-272-3300 FAX: 908-272-4440

GEOTECHNICAL ENGINEERS:
LANGAN ENGINEERING & ENVIRONMENTAL SERVICES
21 Penn Plaza - 360 West 31st Street, 8th Floor
New York, NY 10001
TEL: 212.479.5400 FAX: 212.479.5444

No.	DESCRIPTION:	DATE:
1	STEEL BID PACKAGE	02-24-15
2	ISSUED FOR FILING	03-26-15

Discrepancies must be reported immediately to the Architect before proceeding. Only figured dimensions are to be used. Contractors must check all dimensions on site. This drawing is protected by copyright.

ALL DIMENSIONS ARE SHOWN IN IMPERIAL.

CONSULTANT:

AAI ARCHITECTS, P.C.

PROJECT:
250 SOUTH STREET
NEW YORK, NY

DRAWING TITLE:
PART FRAMING PLAN AT STEPS

SEAL & SIGNATURE:

STATE OF NEW YORK · AHMAD RAHIMIAN · No. 065537 · LICENSED PROFESSIONAL ENGINEER

DATE:	02/24/15
PROJECT No:	1302510
DRAWN: CAD	REV:
CHK: CL	
SCALE: 3/16" = 1'-0"	
DWG No: **S-017.00**	
DOB PAGE No: of	

DOB EMPLOYEE STAMP:

Damian Titus
NYC Buildings
APPROVED
Under Directive 2 of 1975
Date: 05/21/2015
NYC Development Hub

DOB B-SCAN:

FILE NAME:
PLOT DATE:

DEPT OF BLDGS121185539 Job Number
E-5998231320 Scan Code
30" x 42" Arch E1 - SHEET SIZE

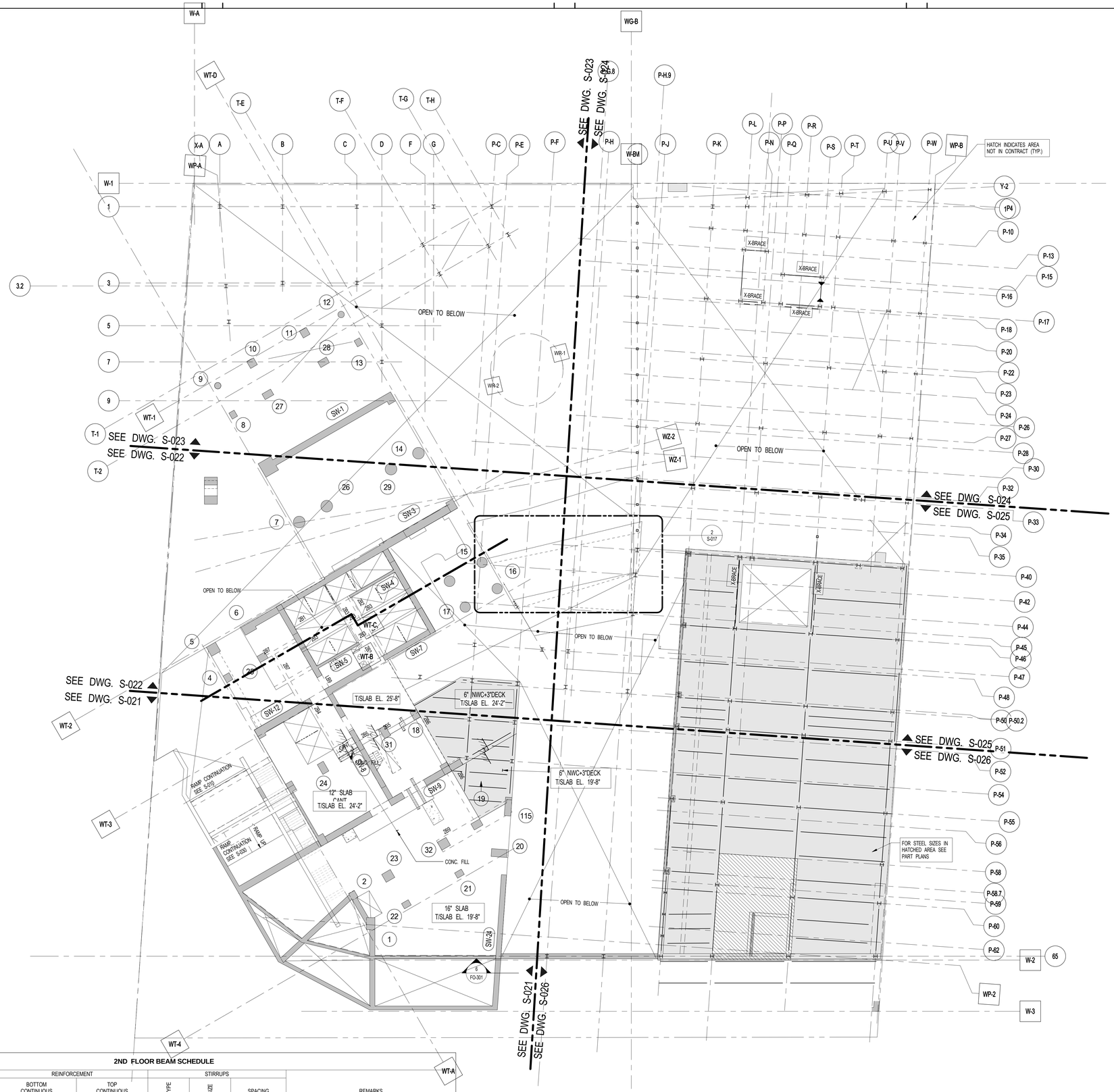

2ND FLOOR BEAM SCHEDULE

BEAM MARK	SIZE WIDTH	SIZE DEPTH	REINFORCEMENT BOTTOM CONTINUOUS	REINFORCEMENT TOP CONTINUOUS	STIRRUPS TYPE	STIRRUPS SIZE	STIRRUPS SPACING	REMARKS
2B1	12	24	2-#11	2-#11	1	#4	@6	
2B2	12	24	3-#11	2-#11	1	#4	@10	
2B3	12	24	2-#9	2-#9	1	#4	@10	
2B4	12	30	2-#10	2-#8	1	#4	@10	
2B5	24	30	4-#11	4-#9	2	#4	@12	
2B6	26	24	4-#9	4-#9	2	#4	@10	
2B7	16	26	2-#10	2-#8	1	#4	@10	
2B8	16	26	2-#8	2-#10	1	#4	@10	
2B9	60	144	56-#11 (6 LAYERS)	18-#11 (2 LAYERS)	3	#6	@8	#6@8 HORIZ. E.F., CONT. FOR BOTT. REINF. AT COL. 115 PROVIDE D6 LENTON TERMINATORS

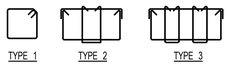

STIRRUP TYPES

1 S-020 **2ND FLOOR FRAMING PLAN**

SCALE: 1/16" = 1'-0"

1. TOP OF SLAB AT STEEL CONSTRUCTION SHALL BE AS NOTED ON PLAN.
2. SLAB CONSTRUCTION SHALL BE 6" NORMAL WEIGHT CONCRETE ON TOP OF 3" 18GA. (Fy=50 KSI) COMPOSITE GALVANIZED METAL DECK (TOTAL SLAB DEPTH - 9") WITH #4@12 T&B REINF.
3. STUDS SHALL BE 3/4" Ø x 6" LONG. ALL STEEL BEAMS SHALL HAVE MIN 1 STUD/FT. U.O.N. THUS <_> ON PLAN.

CONC. NOTES:

1. TOP OF SLAB ELEVATION TO BE 25'-8" U.O.N. ON PLAN
2. FOR CONC. NOTES SEE S-010

KEY PLAN:

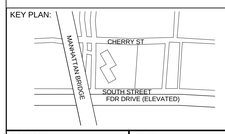

PROJECT NORTH

TRUE NORTH

DEVELOPER:
EXTELL DEVELOPMENT COMPANY
805 Third Ave, 7th Floor
New York, NY 10022
TEL: 212-712-6000 FAX: 212-712-6100

ARCHITECT OF RECORD:
AAI ARCHITECTS, P.C.
14 Wall Street, 2nd Floor
New York, NY 10005
TEL: 212-964-4040 FAX: 212-964-4090

INTERIOR DESIGNER:
MEYER DAVIS
180 Varick St, suite 404
New York, NY 10014
TEL: 212-627-5574

LANDSCAPE DESIGNER:
WEST 8 URBAN DESIGN & LANDSCAPE ARCHITECTURE P.C.
333 Hudson Street, Suite 905
New York, NY 10013
TEL: 212-285-0088 FAX: 212-285-0228

STRUCTURAL ENGINEERS:
WSP
228 East 45th Street
New York, NY 10017
TEL: 212-687-9888 FAX: 646-487-5501

MEP ENGINEERS:
ICOR ASSOCIATES, LLC
485 C Route 1 South, Suite 200
Iseline, NJ 08830
TEL: 908-272-3300 FAX: 908-272-4440

GEOTECHNICAL ENGINEERS:
LANGAN ENGINEERING & ENVIRONMENTAL SERVICES
21 Penn Plaza - 360 West 31st Street, 8th Floor
New York, NY 10001
TEL: 212.479.5400 FAX: 212.479.5444

No.	DESCRIPTION:	DATE:
1	50% SD	02-28-14
2	50% DD	08-01-14
3	DESIGN DEVELOPMENT	10-07-14
4	STEEL BID PACKAGE	02-24-15
5	CONCRETE BID PACKAGE	03-06-15
6	ISSUED FOR FILING	03-26-15

Discrepancies must be reported immediately to the Architect before proceeding. Only figured dimensions are to be used. Contractors must check all dimensions on site. This drawing is protected by copyright.

ALL DIMENSIONS ARE SHOWN IN IMPERIAL.

CONSULTANT:
AAI ARCHITECTS, P.C.

PROJECT:
250 SOUTH STREET
NEW YORK, NY

DRAWING TITLE:
2ND FLOOR OVERALL FRAMING PLAN

SEAL & SIGNATURE:

DATE:	02/28/14
PROJECT No:	1302510
DRAWN: CAD	REV:
CHK: CL	
SCALE:	
DWG No:	**S-020.00**
DOB PAGE No:	of

DOB EMPLOYEE STAMP:

DOB B-SCAN:

FILE NAME:
PLOT DATE:

DEPT OF BLDGS 121185569 Job Number
E 560145404440 Scan Code

30" x 42" Arch E1 SHEET SIZE

1 S-021 — 2ND FLOOR FRAMING PLAN - PART 1
SCALE: 3/16" = 1'-0"

FILE NAME:
PLOT DATE:

KEY PLAN:
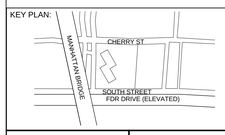

PROJECT NORTH / TRUE NORTH

DEVELOPER:
EXTELL DEVELOPMENT COMPANY
805 Third Ave, 7th Floor
New York, NY 10022
TEL: 212-712-6000 FAX: 212-712-6100

ARCHITECT OF RECORD:
AAI ARCHITECTS, P.C.
14 Wall Street, 2nd Floor
New York, NY 10005
TEL: 212-964-4040 FAX: 212-964-4090

INTERIOR DESIGNER:
MEYER DAVIS
180 Varick St, suite 404
New York, NY 10014
TEL: 212-627-5574

LANDSCAPE DESIGNER:
WEST 8 URBAN DESIGN & LANDSCAPE ARCHITECTURE P.C.
333 Hudson Street, Suite 905
New York, NY 10013
TEL: 212-285-0088 FAX: 212-285-0228

STRUCTURAL ENGINEERS:
WSP
228 East 45th Street
New York, NY 10017
TEL: 212-687-9888 FAX: 646-487-5501

MEP ENGINEERS:
ICOR ASSOCIATES, LLC
485 C Route 1 South, Suite 200
Iseline, NJ 08830
TEL: 908-272-3300 FAX: 908-272-4440

GEOTECHNICAL ENGINEERS:
LANGAN ENGINEERING & ENVIRONMENTAL SERVICES
21 Penn Plaza - 360 West 31st Street, 8th Floor
New York, NY 10001
TEL: 212.479.5400 FAX: 212.479.5444

No.	DESCRIPTION:	DATE:
1	DESIGN DEVELOPMENT	10-07-14
2	STEEL BID PACKAGE	02-24-15
3	CONCRETE BID PACKAGE	03-06-15
4	ISSUED FOR FILING	03-26-15

Discrepancies must be reported immediately to the Architect before proceeding. Only figured dimensions are to be used. Contractors must check all dimensions on site. This drawing is protected by copyright.

ALL DIMENSIONS ARE SHOWN IN IMPERIAL.

CONSULTANT:
AAI ARCHITECTS, P.C.

PROJECT:
250 SOUTH STREET
NEW YORK, NY

DRAWING TITLE:
2ND FLOOR FRAMING PLAN - PART 1

SEAL & SIGNATURE:
STATE OF NEW YORK — AHMAD RAHIMIAN — LICENSED PROFESSIONAL ENGINEER — NO. 085554

DATE:	09/24/14
PROJECT No:	1302510
DRAWN: CAD	REV:
CHK: CL	
SCALE:	
DWG No:	**S-021.00**
DOB PAGE No:	of

DOB EMPLOYEE STAMP:
Damian Titus
Buildings
APPROVED
Under Directive 2 of 1975
Date: 05/21/2015:
NYC Development Hub

DOB B-SCAN:

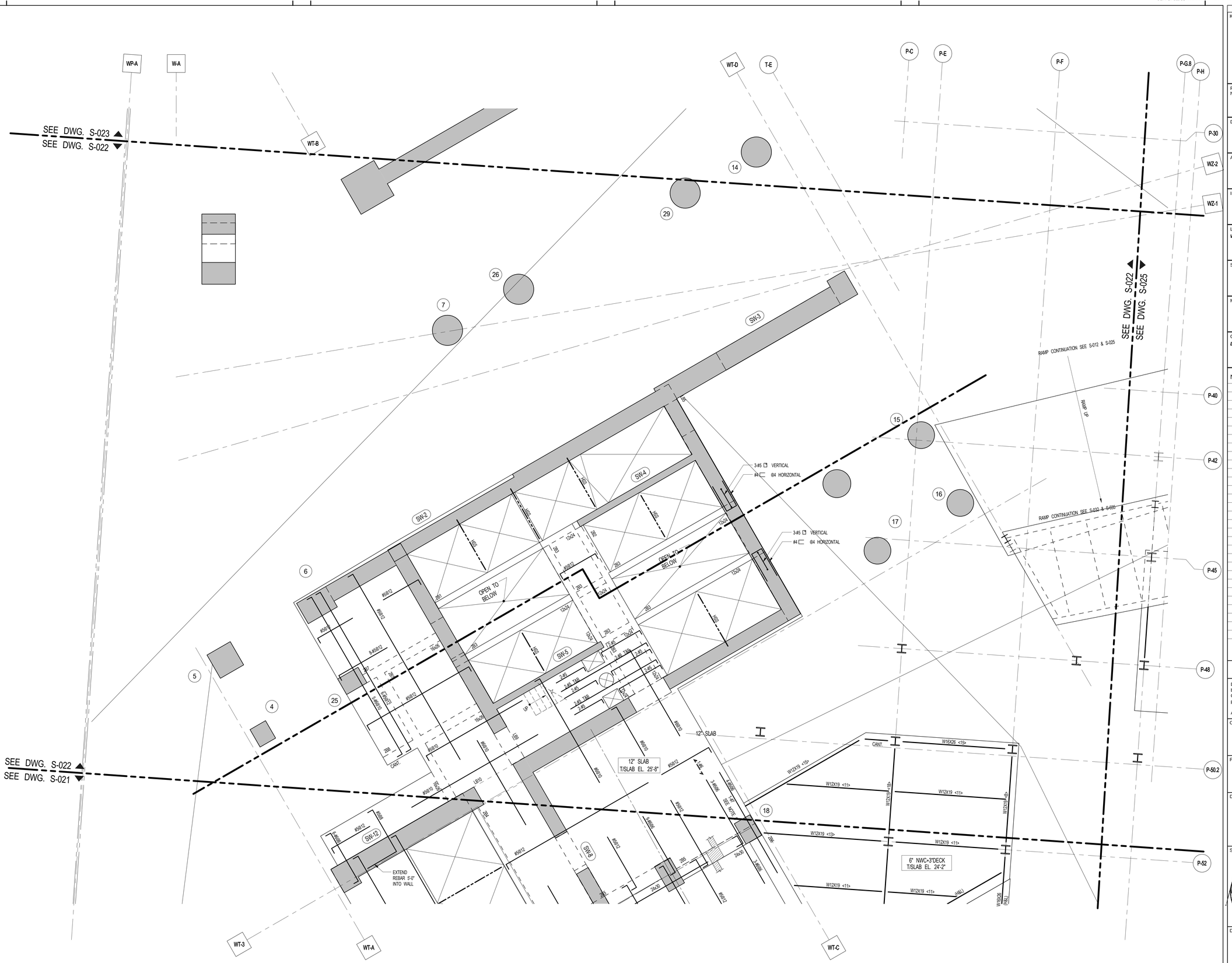

1 S-022 2ND FLOOR FRAMING PLAN - PART 2
SCALE: 3/16" = 1'-0"

KEY PLAN:

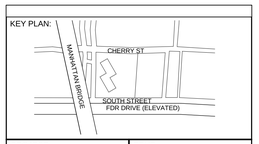

PROJECT NORTH

TRUE NORTH

DEVELOPER:
EXTELL DEVELOPMENT COMPANY
805 Third Ave, 7th Floor
New York, NY 10022
TEL: 212-712-6000 FAX: 212-712-6100

ARCHITECT OF RECORD:
AAI ARCHITECTS, P.C.
14 Wall Street, 2nd Floor
New York, NY 10005
TEL: 212-964-4040 FAX: 212-964-4090

INTERIOR DESIGNER:
MEYER DAVIS
180 Varick St, suite 404
New York, NY 10014
TEL: 212-627-5574

LANDSCAPE DESIGNER:
WEST 8 URBAN DESIGN & LANDSCAPE ARCHITECTURE P.C.
333 Hudson Street, Suite 905
New York, NY 10013
TEL: 212-285-0088 FAX: 212-285-0228

STRUCTURAL ENGINEERS:
WSP
228 East 45th Street
New York, NY 10017
TEL: 212-687-9888 FAX: 646-487-5501

MEP ENGINEERS:
ICOR ASSOCIATES, LLC
485 C Route 1 South, Suite 200
Iseline, NJ 08830
TEL: 908-272-3300 FAX: 908-272-4440

GEOTECHNICAL ENGINEERS:
LANGAN ENGINEERING & ENVIRONMENTAL SERVICES
21 Penn Plaza - 360 West 31st Street, 8th Floor
New York, NY 10001
TEL: 212.479.5400 FAX: 212.479.5444

No.	DESCRIPTION:	DATE:
1	DESIGN DEVELOPMENT	10-07-14
2	STEEL BID PACKAGE	02-24-15
3	CONCRETE BID PACKAGE	03-06-15
4	ISSUED FOR FILING	03-26-15

Discrepancies must be reported immediately to the Architect before proceeding. Only figured dimensions are to be used. Contractors must check all dimensions on site. This drawing is protected by copyright.

ALL DIMENSIONS ARE SHOWN IN IMPERIAL.

CONSULTANT:
AAI ARCHITECTS, P.C.

PROJECT:
250 SOUTH STREET
NEW YORK, NY

DRAWING TITLE:
2ND FLOOR FRAMING PLAN - PART 2

SEAL & SIGNATURE:
STATE OF NEW YORK AHMAD RAHIMIAN No. 085537 LICENSED PROFESSIONAL ENGINEER

DATE:	09/24/14
PROJECT No:	1302510
DRAWN: CAD	REV:
CHK: CL	
SCALE:	
DWG No:	S-022.00
DOB PAGE No:	of

DOB EMPLOYEE STAMP:
Damian Titus
Buildings
APPROVED
Under Directive 2 of 1975
Date: 05/21/2015:
NYC Development Hub

DOB B-SCAN:

30" x 42" Arch E1 - SHEET SIZE

FILE NAME:
PLOT DATE:

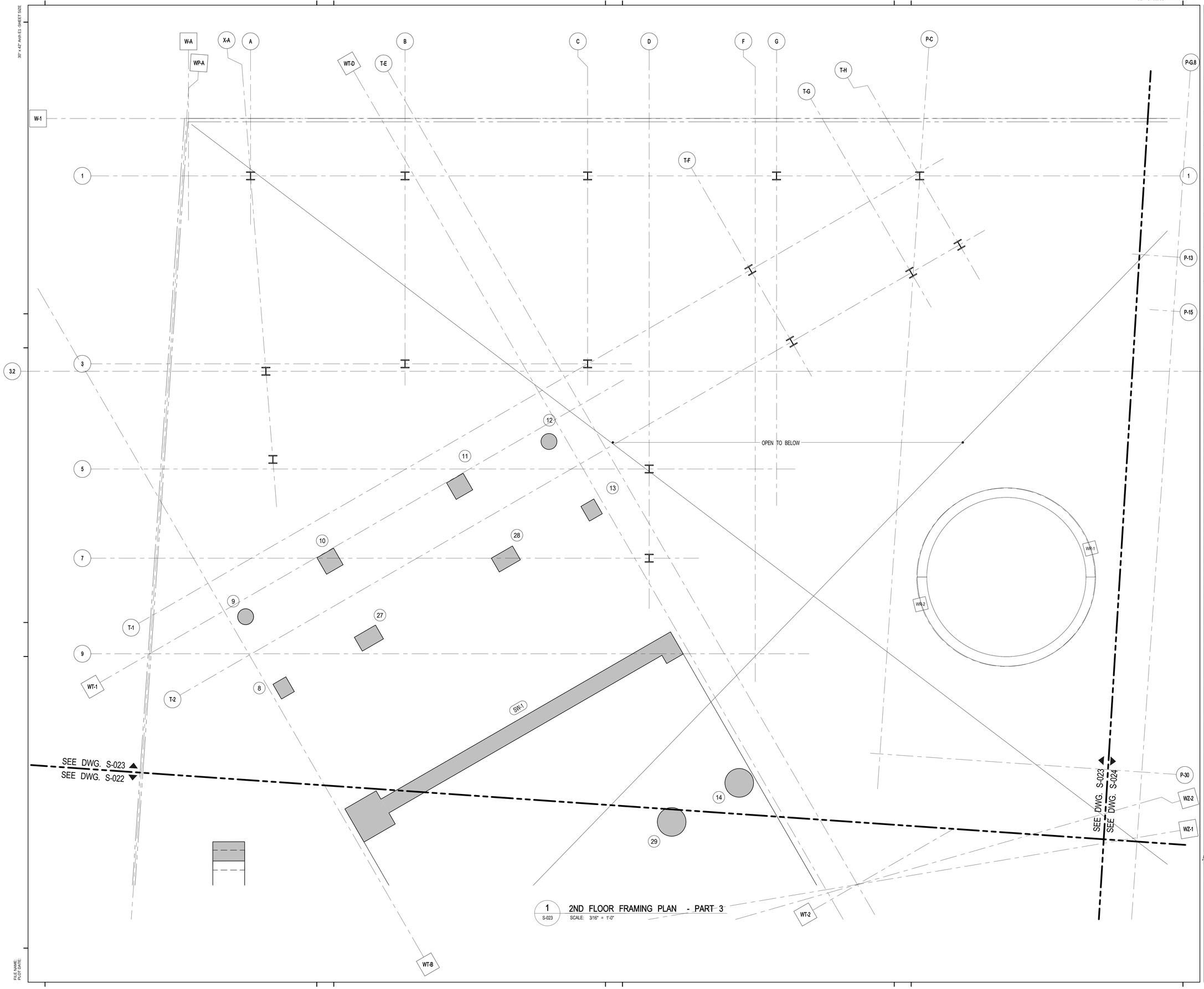

1 S-023 2ND FLOOR FRAMING PLAN - PART 3
SCALE: 3/16" = 1'-0"

KEY PLAN:

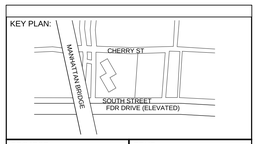

PROJECT NORTH

TRUE NORTH

DEVELOPER:
EXTELL DEVELOPMENT COMPANY
805 Third Ave, 7th Floor
New York, NY 10022
TEL: 212-712-6000 FAX: 212-712-6100

ARCHITECT OF RECORD:
AAI ARCHITECTS, P.C.
14 Wall Street, 2nd Floor
New York, NY 10005
TEL: 212-964-4040 FAX: 212-964-4090

INTERIOR DESIGNER:
MEYER DAVIS
180 Varick St, suite 404
New York, NY 10014
TEL: 212-627-5574

LANDSCAPE DESIGNER:
WEST 8 URBAN DESIGN & LANDSCAPE ARCHITECTURE P.C.
333 Hudson Street, Suite 905
New York, NY 10013
TEL: 212-285-0088 FAX: 212-285-0228

STRUCTURAL ENGINEERS:
WSP
228 East 45th Street
New York, NY 10017
TEL: 212-687-9888 FAX: 646-487-5501

MEP ENGINEERS:
ICOR ASSOCIATES, LLC
485 C Route 1 South, Suite 200
Iseline, NJ 08830
TEL: 908-272-3300 FAX: 908-272-4440

GEOTECHNICAL ENGINEERS:
LANGAN ENGINEERING & ENVIRONMENTAL SERVICES
21 Penn Plaza - 360 West 31st Street, 8th Floor
New York, NY 10001
TEL: 212.479.5400 FAX: 212.479.5444

No.	DESCRIPTION:	DATE:
1	DESIGN DEVELOPMENT	10-07-14
2	STEEL BID PACKAGE	02-24-15
3	CONCRETE BID PACKAGE	03-06-15
4	ISSUED FOR FILING	03-26-15

Discrepancies must be reported immediately to the Architect before proceeding. Only figured dimensions are to be used. Contractors must check all dimensions on site. This drawing is protected by copyright.

ALL DIMENSIONS ARE SHOWN IN IMPERIAL.

CONSULTANT:
AAI ARCHITECTS, P.C.

PROJECT:
250 SOUTH STREET
NEW YORK, NY

DRAWING TITLE:
2ND FLOOR FRAMING PLAN - PART 3

SEAL & SIGNATURE:
STATE OF NEW YORK AHMAD RAHIMIAN No. 065537 LICENSED PROFESSIONAL ENGINEER

DATE:	09/24/14
PROJECT No:	1302510
DRAWN: CAD	REV:
CHK: CL	
SCALE:	
DWG No:	S-023.00
DOB PAGE No:	of

DOB EMPLOYEE STAMP:
Damian Titus
Buildings
APPROVED
Under Directive 2 of 1975
Date: 05/22/2015:
NYC Development Hub

DOB B-SCAN:

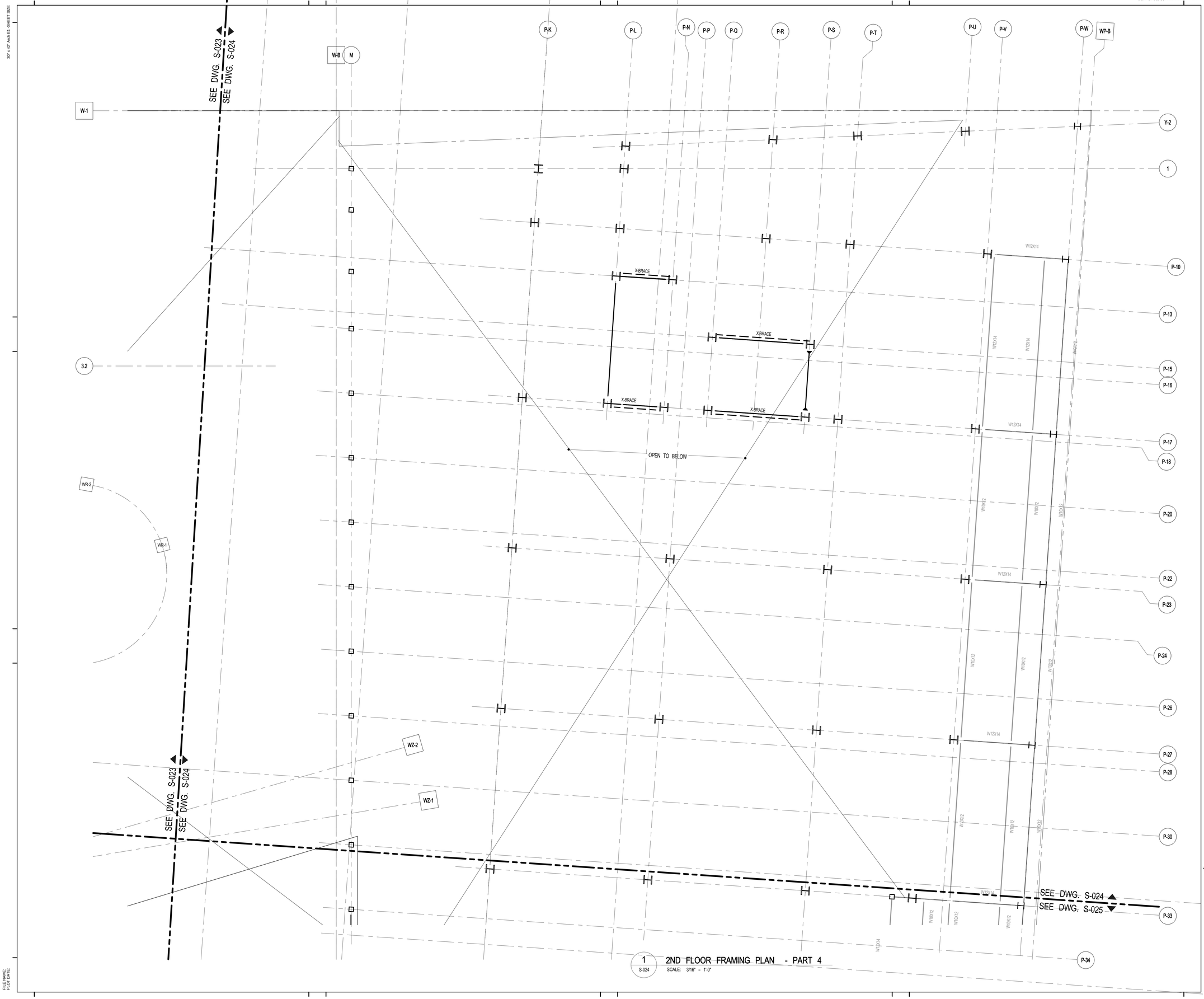

1 S-024 2ND FLOOR FRAMING PLAN - PART 4
SCALE: 3/16" = 1'-0"

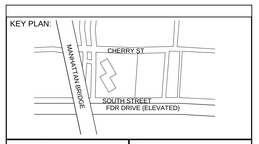

PROJECT NORTH

TRUE NORTH

DEVELOPER:
EXTELL DEVELOPMENT COMPANY
805 Third Ave, 7th Floor
New York, NY 10022
TEL: 212-712-6000 FAX: 212-712-6100

ARCHITECT OF RECORD:
AAI ARCHITECTS, P.C.
14 Wall Street, 2nd Floor
New York, NY 10005
TEL: 212-964-4040 FAX: 212-964-4090

INTERIOR DESIGNER:
MEYER DAVIS
180 Varick St, suite 404
New York, NY 10014
TEL: 212-627-5574

LANDSCAPE DESIGNER:
WEST 8 URBAN DESIGN & LANDSCAPE ARCHITECTURE P.C.
333 Hudson Street, Suite 905
New York, NY 10013
TEL: 212-285-0088 FAX: 212-285-0228

STRUCTURAL ENGINEERS:
WSP
228 East 45th Street
New York, NY 10017
TEL: 212-687-9888 FAX: 646-487-5501

MEP ENGINEERS:
ICOR ASSOCIATES, LLC
485 C Route 1 South, Suite 200
Iseline, NJ 08830
TEL: 908-272-3300 FAX: 908-272-4440

GEOTECHNICAL ENGINEERS:
LANGAN ENGINEERING & ENVIRONMENTAL SERVICES
21 Penn Plaza - 360 West 31st Street, 8th Floor
New York, NY 10001
TEL: 212.479.5400 FAX: 212.479.5444

No.	DESCRIPTION:	DATE:
1	DESIGN DEVELOPMENT	10-07-14
2	STEEL BID PACKAGE	02-24-15
3	ISSUED FOR FILING	03-26-15

Discrepancies must be reported immediately to the Architect before proceeding. Only figured dimensions are to be used. Contractors must check all dimensions on site. This drawing is protected by copyright.

ALL DIMENSIONS ARE SHOWN IN IMPERIAL.

CONSULTANT:
AAI ARCHITECTS, P.C.

PROJECT:
250 SOUTH STREET
NEW YORK, NY

DRAWING TITLE:
2ND FLOOR FRAMING PLAN - PART 4

SEAL & SIGNATURE:
STATE OF NEW YORK
AHMAD RAHIMIAN
No. 085537
LICENSED PROFESSIONAL ENGINEER

DATE:	09/24/14
PROJECT No:	1302510
DRAWN: CAD	REV:
CHK: CL	
SCALE:	
DWG No:	S-024.00
DOB PAGE No:	of

DOB EMPLOYEE STAMP:
Damian Titus
NYC Buildings
APPROVED
Under Directive 2 of 1975
Date: 05/21/2015:
NYC Development Hub

DOB B-SCAN:

DEPT OF BLDGS 121185528 Job Number
ES665808388 Scan Code

30" x 42" Arch E1 - SHEET SIZE

FILE NAME:
PLOT DATE:

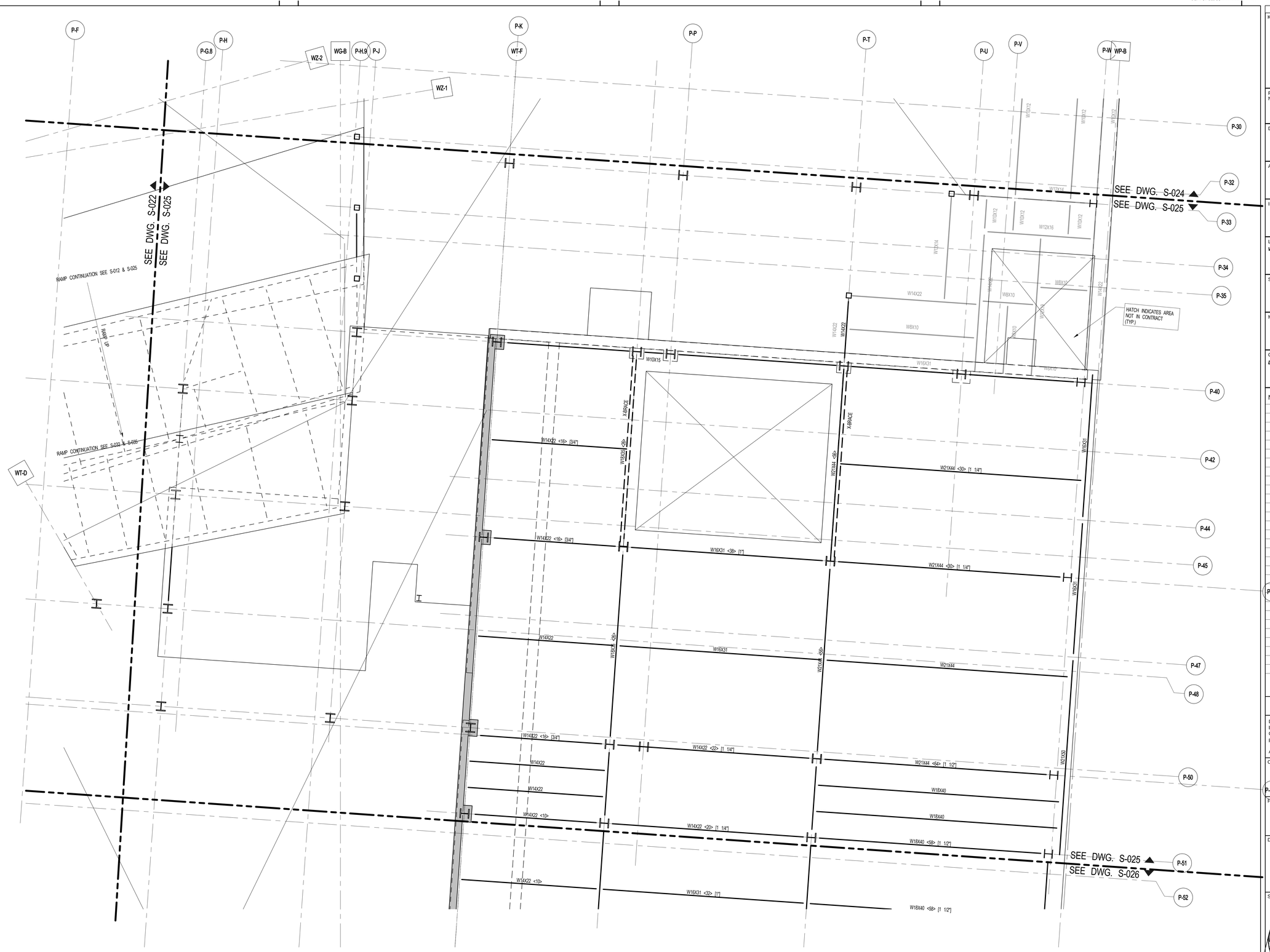

1 S-025 2ND FLOOR FRAMING PLAN - PART 5
SCALE: 3/16" = 1'-0"

KEY PLAN:

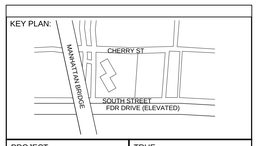

PROJECT NORTH | TRUE NORTH

DEVELOPER:
EXTELL DEVELOPMENT COMPANY
805 Third Ave, 7th Floor
New York, NY 10022
TEL: 212-712-6000 FAX: 212-712-6100

ARCHITECT OF RECORD:
AAI ARCHITECTS, P.C.
14 Wall Street, 2nd Floor
New York, NY 10005
TEL: 212-964-4040 FAX: 212-964-4090

INTERIOR DESIGNER:
MEYER DAVIS
180 Varick St, suite 404
New York, NY 10014
TEL: 212-627-5574

LANDSCAPE DESIGNER:
WEST 8 URBAN DESIGN & LANDSCAPE ARCHITECTURE P.C.
333 Hudson Street, Suite 905
New York, NY 10013
TEL: 212-285-0088 FAX: 212-285-0228

STRUCTURAL ENGINEERS:
WSP
228 East 45th Street
New York, NY 10017
TEL: 212-687-9888 FAX: 646-487-5501

MEP ENGINEERS:
ICOR ASSOCIATES, LLC
485 C Route 1 South, Suite 200
Iseline, NJ 08830
TEL: 908-272-3300 FAX: 908-272-4440

GEOTECHNICAL ENGINEERS:
LANGAN ENGINEERING & ENVIRONMENTAL SERVICES
21 Penn Plaza - 360 West 31st Street, 8th Floor
New York, NY 10001
TEL: 212.479.5400 FAX: 212.479.5444

No.	DESCRIPTION:	DATE:
1	DESIGN DEVELOPMENT	10-07-14
2	STEEL BID PACKAGE	02-24-15
3	ISSUED FOR FILING	03-26-15

Discrepancies must be reported immediately to the Architect before proceeding. Only figured dimensions are to be used. Contractors must check all dimensions on site. This drawing is protected by copyright.

ALL DIMENSIONS ARE SHOWN IN IMPERIAL.

CONSULTANT:
AAI ARCHITECTS, P.C.

PROJECT:
250 SOUTH STREET
NEW YORK, NY

DRAWING TITLE:
2ND FLOOR FRAMING PLAN - PART 5

SEAL & SIGNATURE:
STATE OF NEW YORK · AHMAD RAHMAN · No. 085537 · LICENSED PROFESSIONAL ENGINEER

DATE:	09/24/14
PROJECT No:	1302510
DRAWN: CAD	REV:
CHK: CL	
SCALE:	
DWG No:	S-025.00
DOB PAGE No:	of

DOB EMPLOYEE STAMP:
Damian Titus
Buildings
APPROVED
Under Directive 2 of 1975
Date: 05/21/2015:
NYC Development Hub

DOB B-SCAN:

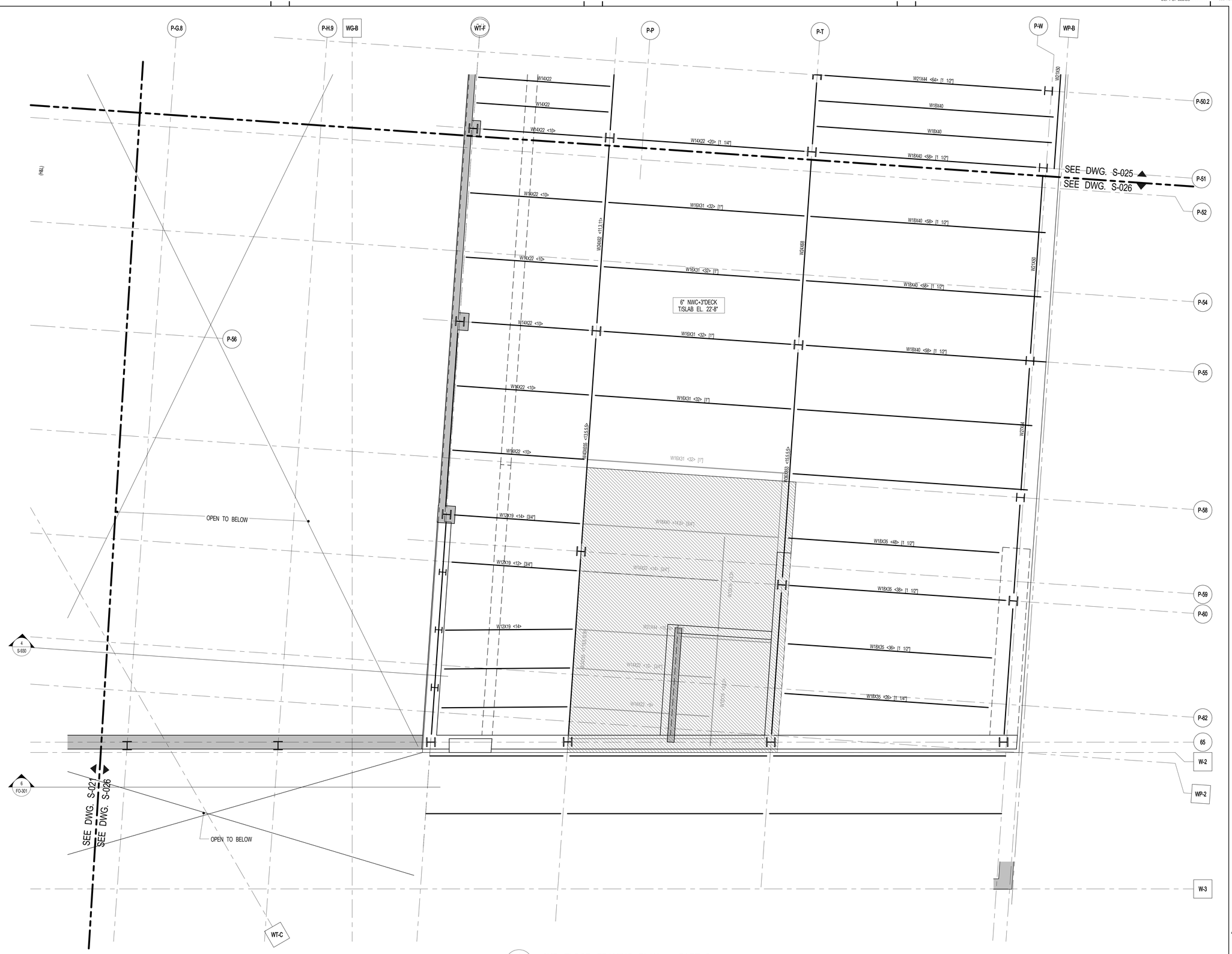

1 S-026 2ND FLOOR FRAMING PLAN - PART 6

SCALE: 3/16" = 1'-0"

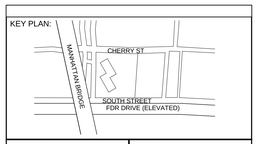

PROJECT NORTH

TRUE NORTH

DEVELOPER:
EXTELL DEVELOPMENT COMPANY
805 Third Ave, 7th Floor
New York, NY 10022
TEL: 212-712-6000 FAX: 212-712-6100

ARCHITECT OF RECORD:
AAI ARCHITECTS, P.C.
14 Wall Street, 2nd Floor
New York, NY 10005
TEL: 212-964-4040 FAX: 212-964-4090

INTERIOR DESIGNER:
MEYER DAVIS
180 Varick St, suite 404
New York, NY 10014
TEL: 212-627-5574

LANDSCAPE DESIGNER:
WEST 8 URBAN DESIGN & LANDSCAPE ARCHITECTURE P.C.
333 Hudson Street, Suite 905
New York, NY 10013
TEL: 212-285-0088 FAX: 212-285-0228

STRUCTURAL ENGINEERS:
WSP
228 East 45th Street
New York, NY 10017
TEL: 212-687-9888 FAX: 646-487-5501

MEP ENGINEERS:
ICOR ASSOCIATES, LLC
485 C Route 1 South, Suite 200
Iseline, NJ 08830
TEL: 908-272-3300 FAX: 908-272-4440

GEOTECHNICAL ENGINEERS:
LANGAN ENGINEERING & ENVIRONMENTAL SERVICES
21 Penn Plaza - 360 West 31st Street, 8th Floor
New York, NY 10001
TEL: 212.479.5400 FAX: 212.479.5444

No.	DESCRIPTION:	DATE:
1	DESIGN DEVELOPMENT	10-07-14
2	STEEL BID PACKAGE	02-24-15
3	ISSUED FOR FILING	03-26-15

Discrepancies must be reported immediately to the Architect before proceeding. Only figured dimensions are to be used. Contractors must check all dimensions on site. This drawing is protected by copyright.

ALL DIMENSIONS ARE SHOWN IN IMPERIAL.

CONSULTANT:
AAI ARCHITECTS, P.C.

PROJECT:
250 SOUTH STREET
NEW YORK, NY

DRAWING TITLE:
2ND FLOOR FRAMING PLAN - PART 6

SEAL & SIGNATURE:
STATE OF NEW YORK
AHMAD RAHIMIAN
No. 085537
LICENSED PROFESSIONAL ENGINEER

DATE:	09/24/14
PROJECT No:	1302510
DRAWN: CAD	REV:
CHK: CL	
SCALE:	
DWG No:	S-026.00
DOB PAGE No:	of

DOB EMPLOYEE STAMP:
Damian Titus
Buildings
APPROVED
Under Directive 2 of 1975
Date: 05/21/2015:
NYC Development Hub

DOB B-SCAN:

DEPT OF BLDGS 121185539 Job Number
E 5303247560 Scan Code
30" x 42" Arch E1 - SHEET SIZE

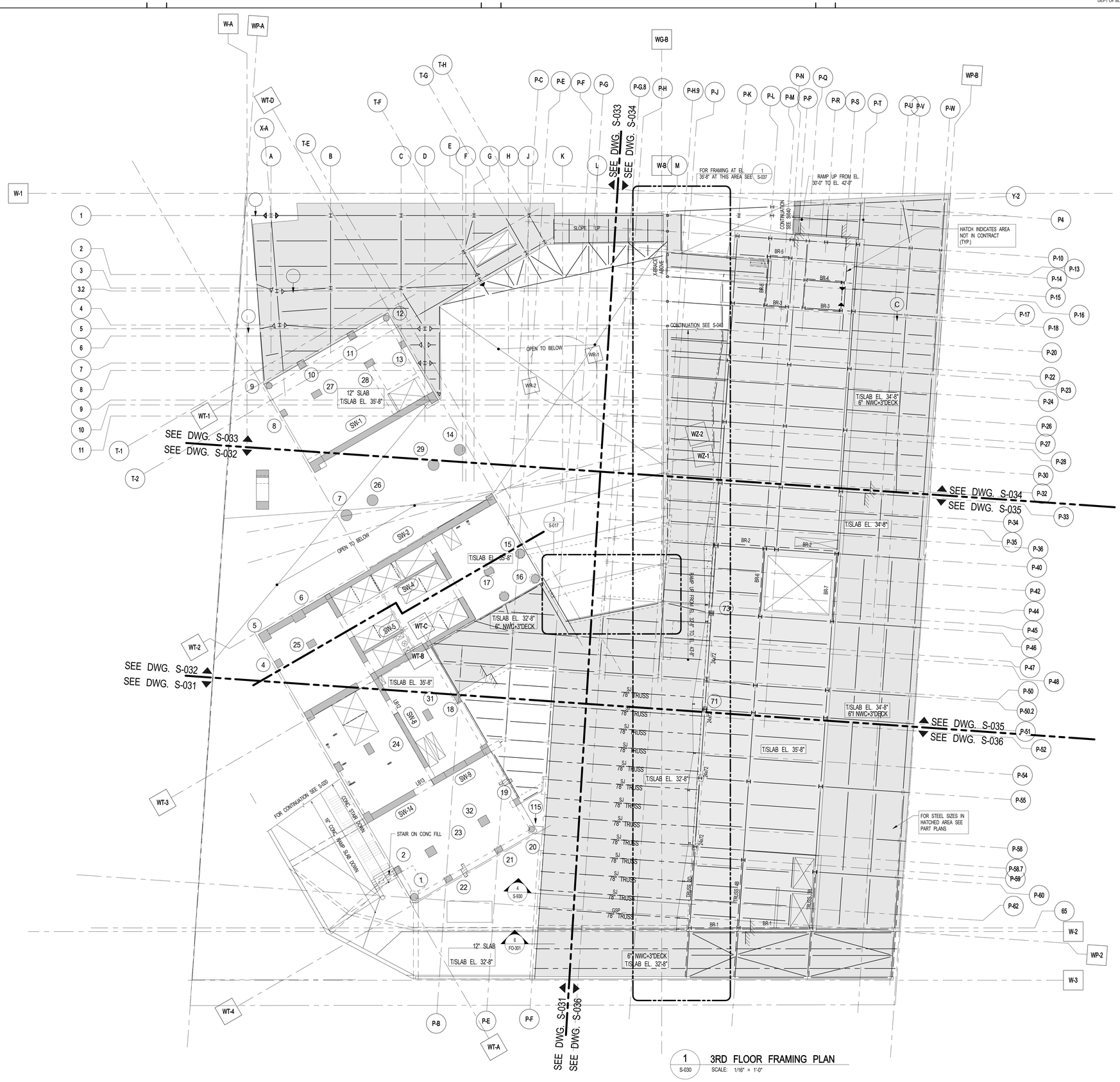

1 S-030 **3RD FLOOR FRAMING PLAN**
SCALE: 1/16" = 1'-0"

CONCRETE NOTES:
1. TOP OF SLAB ELEVATION SEE PLAN
2. SLAB TO BE 12" THICK U.O.N. THUS ▭ ON PLAN.
3. BOTTOM REINFORCEMENT TO BE #5@12 CONT. E.W. FOR 12" SLAB, FOR ADDITIONAL REIFORCEMENT SEE PLAN
4. FOR DETAILS OF THE INTEGRITY REINFORCEMENT SEE DRAWING S-965.
5. FOR BALANCE OF NOTES SEE DRAWING S-010.

1. TOP OF SLAB AT STEEL CONSTRUCTION SHALL BE AS NOTED ON PLAN.
2. SLAB CONSTRUCTION SHALL BE 6" NORMAL WEIGHT CONCRETE ON TOP OF 3" 18GA. (Fy=50 KSI) COMPOSITE GALVANIZED METAL DECK (TOTAL SLAB DEPTH - 9") WITH #4 @12 T&B REINF.
3. STUDS SHALL BE 3/4" Ø x 6" LONG. ALL STEEL BEAMS SHALL HAVE MIN 1 STUD/FT. U.O.N. THUS <-> ON PLAN.

KEY PLAN:
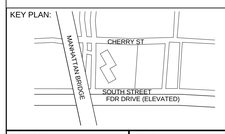

PROJECT NORTH | TRUE NORTH

DEVELOPER:
EXTELL DEVELOPMENT COMPANY
805 Third Ave, 7th Floor
New York, NY 10022
TEL: 212-712-6000 FAX: 212-712-6100

ARCHITECT OF RECORD:
AAI ARCHITECTS, P.C.
14 Wall Street, 2nd Floor
New York, NY 10005
TEL: 212-964-4040 FAX: 212-964-4090

INTERIOR DESIGNER:
MEYER DAVIS
180 Varick St, suite 404
New York, NY 10014
TEL: 212-627-5574

LANDSCAPE DESIGNER:
WEST 8 URBAN DESIGN & LANDSCAPE ARCHITECTURE P.C.
333 Hudson Street, Suite 905
New York, NY 10013
TEL: 212-285-0088 FAX: 212-285-0228

STRUCTURAL ENGINEERS:
WSP
228 East 45th Street
New York, NY 10017
TEL: 212-687-9888 FAX: 646-487-5501

MEP ENGINEERS:
ICOR ASSOCIATES, LLC
485 C Route 1 South, Suite 200
Iseline, NJ 08830
TEL: 908-272-3300 FAX: 908-272-4440

GEOTECHNICAL ENGINEERS:
LANGAN ENGINEERING & ENVIRONMENTAL SERVICES
21 Penn Plaza - 360 West 31st Street, 8th Floor
New York, NY 10001
TEL: 212.479.5400 FAX: 212.479.5444

No.	DESCRIPTION:	DATE:
1	50% SD	02-28-14
2	100%SD	04-25-14
3	50% DD	08-01-14
4	DESIGN DEVELOPMENT	10-07-14
5	STEEL BID PACKAGE	02-24-15
6	CONCRETE BID PACKAGE	03-06-15
7	ISSUED FOR FILING	03-26-15

Discrepancies must be reported immediately to the Architect before proceeding. Only figured dimensions are to be used. Contractors must check all dimensions on site. This drawing is protected by copyright.

ALL DIMENSIONS ARE SHOWN IN IMPERIAL.

CONSULTANT:
AAI ARCHITECTS, P.C.

PROJECT:
250 SOUTH STREET
NEW YORK, NY

DRAWING TITLE:
3RD FLOOR OVERALL FRAMING PLAN

SEAL & SIGNATURE:
STATE OF NEW YORK · ARMAND RAMBERAN · LICENSED PROFESSIONAL ENGINEER · No. 085507

DATE:	02/28/14
PROJECT No:	1302510
DRAWN: CAD	REV:
CHK: CL	
SCALE:	
DWG No:	**S-030.00**
DOB PAGE No:	of

DOB EMPLOYEE STAMP:
Damian Titus
NYC Buildings
APPROVED
Under Directive 2 of 1975
Date: 05/21/2015:
NYC Development Hub

DOB B-SCAN:

FILE NAME:
PLOT DATE:

DEPT OF BLDGS121185563 Job Number
ES3998220990 Scan Code

30" x 42" Arch E1 SHEET SIZE

KEY PLAN:

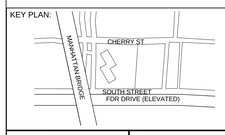

PROJECT NORTH

TRUE NORTH

DEVELOPER:
EXTELL DEVELOPMENT COMPANY
805 Third Ave, 7th Floor
New York, NY 10022
TEL: 212-712-6000 FAX: 212-712-6100

ARCHITECT OF RECORD:
AAI ARCHITECTS, P.C.
14 Wall Street, 2nd Floor
New York, NY 10005
TEL: 212-964-4040 FAX: 212-964-4090

INTERIOR DESIGNER:
MEYER DAVIS
180 Varick St, suite 404
New York, NY 10014
TEL: 212-627-5574

LANDSCAPE DESIGNER:
WEST 8 URBAN DESIGN & LANDSCAPE ARCHITECTURE P.C.
333 Hudson Street, Suite 905
New York, NY 10013
TEL: 212-285-0088 FAX: 212-285-0228

STRUCTURAL ENGINEERS:
WSP
228 East 45th Street
New York, NY 10017
TEL: 212-687-9888 FAX: 646-487-5501

MEP ENGINEERS:
ICOR ASSOCIATES, LLC
485 C Route 1 South, Suite 200
Iseline, NJ 08830
TEL: 908-272-3300 FAX: 908-272-4440

GEOTECHNICAL ENGINEERS:
LANGAN ENGINEERING & ENVIRONMENTAL SERVICES
21 Penn Plaza - 360 West 31st Street, 8th Floor
New York, NY 10001
TEL: 212.479.5400 FAX: 212.479.5444

No.	DESCRIPTION:	DATE:
1	DESIGN DEVELOPMENT	10-07-14
2	STEEL BID PACKAGE	02-24-15
3	CONCRETE BID PACKAGE	03-06-15
4	ISSUED FOR FILING	03-26-15

Discrepancies must be reported immediately to the Architect before proceeding. Only figured dimensions are to be used. Contractors must check all dimensions on site. This drawing is protected by copyright.

ALL DIMENSIONS ARE SHOWN IN IMPERIAL.

CONSULTANT:
AAI ARCHITECTS, P.C.

PROJECT:
250 SOUTH STREET
NEW YORK, NY

DRAWING TITLE:
3RD FLOOR FRAMING PLAN - PART 1

SEAL & SIGNATURE:
STATE OF NEW YORK · AHMAD RAHIMIAN · LICENSED PROFESSIONAL ENGINEER · NO. 085501

DATE:	09/24/14
PROJECT No:	1302510
DRAWN: CAD	REV:
CHK: CL	
SCALE:	
DWG No:	**S-031.00**
DOB PAGE No:	of

DOB EMPLOYEE STAMP:
Damian Titus
NYC Buildings
APPROVED
Under Directive 2 of 1975
Date: 05/21/2015:
NYC Development Hub

DOB B-SCAN:

FILE NAME:
PLOT DATE:

DEPT OF BLDGS121185569 Job Number
E59195993395 Scan Code

30" x 42" Arch E1 SHEET SIZE

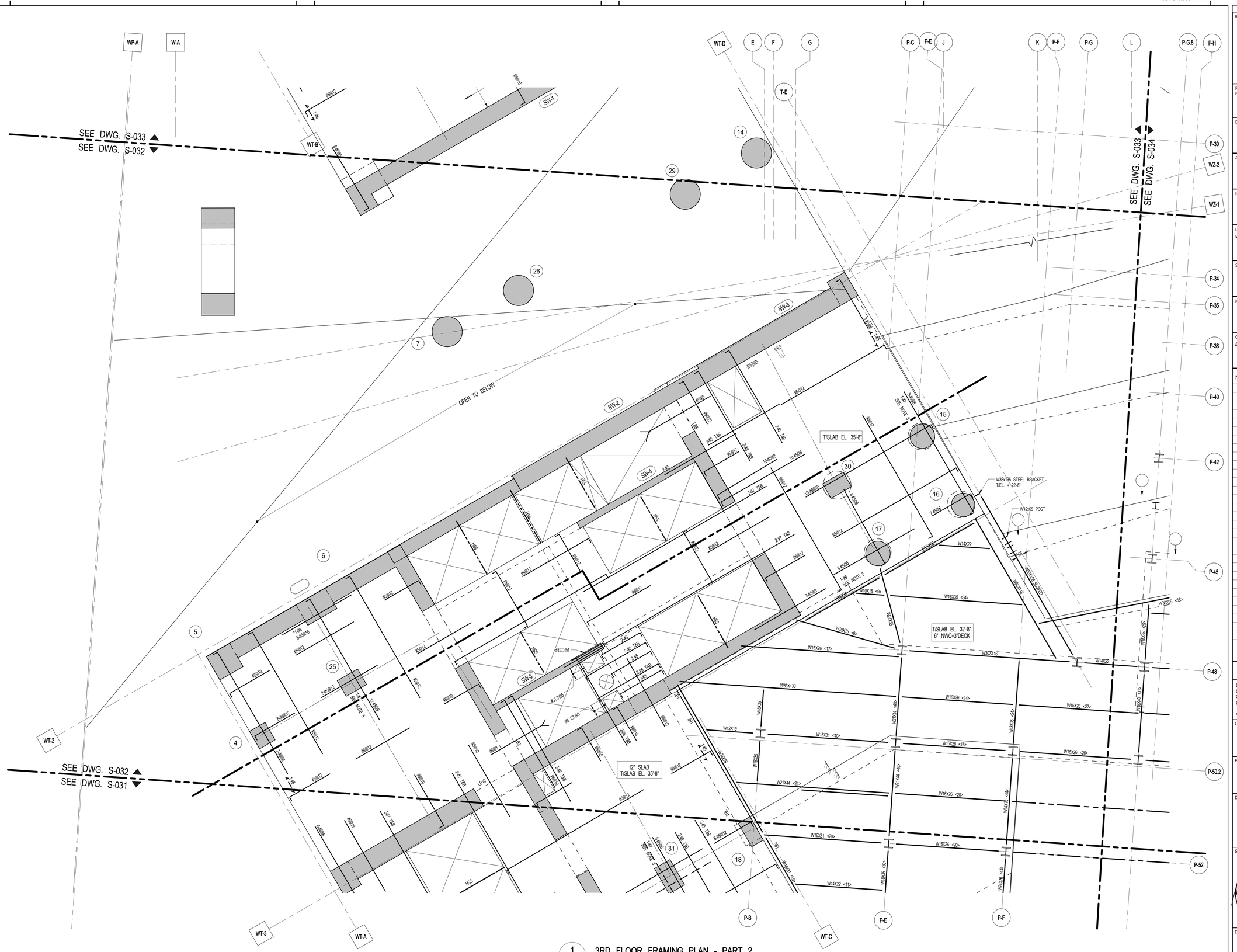

1 S-032 3RD FLOOR FRAMING PLAN - PART 2
SCALE: 3/16" = 1'-0"

KEY PLAN:

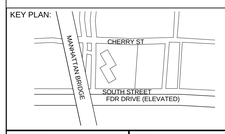

PROJECT NORTH

TRUE NORTH

DEVELOPER:
EXTELL DEVELOPMENT COMPANY
805 Third Ave, 7th Floor
New York, NY 10005
TEL: 212-712-6000 FAX: 212-712-6100

ARCHITECT OF RECORD:
AAI ARCHITECTS, P.C.
14 Wall Street, 2nd Floor
New York, NY 10005
TEL: 212-964-4040 FAX: 212-964-4090

INTERIOR DESIGNER:
MEYER DAVIS
180 Varick St, suite 404
New York, NY 10014
TEL: 212-627-5574

LANDSCAPE DESIGNER:
WEST 8 URBAN DESIGN & LANDSCAPE ARCHITECTURE P.C.
333 Hudson Street, Suite 905
New York, NY 10013
TEL: 212-285-0088 FAX: 212-285-0228

STRUCTURAL ENGINEERS:
WSP
228 East 45th Street
New York, NY 10017
TEL: 212-687-9888 FAX: 646-487-5501

MEP ENGINEERS:
ICOR ASSOCIATES, LLC
485 C Route 1 South, Suite 200
Iseline, NJ 08830
TEL: 908-272-3300 FAX: 908-272-4440

GEOTECHNICAL ENGINEERS:
LANGAN ENGINEERING & ENVIRONMENTAL SERVICES
21 Penn Plaza - 360 West 31st Street, 8th Floor
New York, NY 10001
TEL: 212.479.5400 FAX: 212.479.5444

No.	DESCRIPTION:	DATE:
1	DESIGN DEVELOPMENT	10-07-14
2	STEEL BID PACKAGE	02-24-15
3	CONCRETE BID PACKAGE	03-06-15
4	ISSUED FOR FILING	03-26-15

Discrepancies must be reported immediately to the Architect before proceeding. Only figured dimensions are to be used. Contractors must check all dimensions on site. This drawing is protected by copyright.

ALL DIMENSIONS ARE SHOWN IN IMPERIAL.

CONSULTANT:
AAI ARCHITECTS, P.C.

PROJECT:
250 SOUTH STREET
NEW YORK, NY

DRAWING TITLE:
3RD FLOOR FRAMING PLAN - PART 2

SEAL & SIGNATURE:
STATE OF NEW YORK · ARNOLD RANDALL · 35, ORIENT · LICENSED PROFESSIONAL ENGINEER

DATE:	09/24/14
PROJECT No:	1302510
DRAWN: CAD	REV:
CHK: CL	
SCALE:	
DWG No:	**S-032.00**
DOB PAGE No:	of

DOB EMPLOYEE STAMP:
Damian Titus
Buildings
APPROVED
Under Directive 2 of 1975
Date: 05/21/2015:
NYC Development Hub

DOB B-SCAN:

FILE NAME:
PLOT DATE:

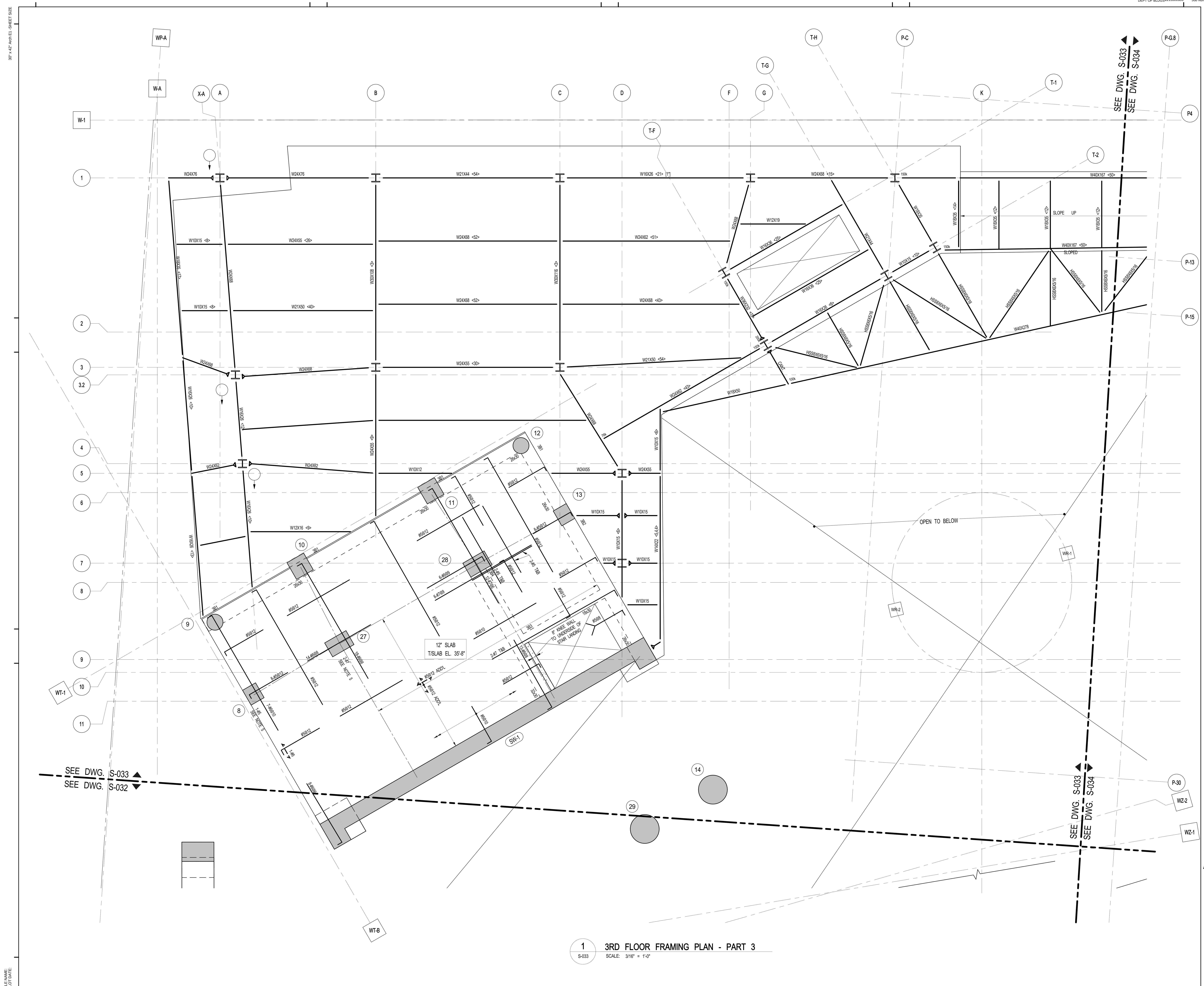

1 / S-033 3RD FLOOR FRAMING PLAN - PART 3
SCALE: 3/16" = 1'-0"

KEY PLAN:

CHERRY ST
SOUTH STREET
FDR DRIVE (ELEVATED)

PROJECT NORTH | TRUE NORTH

DEVELOPER:
EXTELL DEVELOPMENT COMPANY
805 Third Ave, 7th Floor
New York, NY 10022
TEL: 212-712-6000 FAX: 212-712-6100

ARCHITECT OF RECORD:
AAI ARCHITECTS, P.C.
14 Wall Street, 2nd Floor
New York, NY 10005
TEL: 212-964-4040 FAX: 212-964-4090

INTERIOR DESIGNER:
MEYER DAVIS
180 Varick St, suite 404
New York, NY 10014
TEL: 212-627-5574

LANDSCAPE DESIGNER:
WEST 8 URBAN DESIGN & LANDSCAPE ARCHITECTURE P.C.
333 Hudson Street, Suite 905
New York, NY 10013
TEL: 212-285-0088 FAX: 212-285-0228

STRUCTURAL ENGINEERS:
WSP
228 East 45th Street
New York, NY 10017
TEL: 212-687-9888 FAX: 646-487-5501

MEP ENGINEERS:
ICOR ASSOCIATES, LLC
485 C Route 1 South, Suite 200
Iseline, NJ 08830
TEL: 908-272-3300 FAX: 908-272-4440

GEOTECHNICAL ENGINEERS:
LANGAN ENGINEERING & ENVIRONMENTAL SERVICES
21 Penn Plaza - 360 West 31st Street, 8th Floor
New York, NY 10001
TEL: 212.479.5400 FAX: 212.479.5444

No.	DESCRIPTION:	DATE:
1	DESIGN DEVELOPMENT	10-07-14
2	STEEL BID PACKAGE	02-24-15
3	CONCRETE BID PACKAGE	03-06-15
4	ISSUED FOR FILING	03-26-15

Discrepancies must be reported immediately to the Architect before proceeding. Only figured dimensions are to be used. Contractors must check all dimensions on site. This drawing is protected by copyright.

ALL DIMENSIONS ARE SHOWN IN IMPERIAL.

CONSULTANT:
AAI ARCHITECTS, P.C.

PROJECT:
250 SOUTH STREET
NEW YORK, NY

DRAWING TITLE:
3RD FLOOR FRAMING PLAN - PART 3

SEAL & SIGNATURE:

DATE:	09/24/14
PROJECT No:	1302510
DRAWN:	CAD
CHK:	CL
SCALE:	
DWG No:	**S-033.00**
DOB PAGE No:	of

REV:

DOB EMPLOYEE STAMP: Damian Titus — NYC Buildings APPROVED Under Directive 2 of 1975 Date: 05/21/2015 — NYC Development Hub

DOB B-SCAN:

1 S-034 3RD FLOOR FRAMING PLAN - PART 4
SCALE: 3/16" = 1'-0"

KEY PLAN:

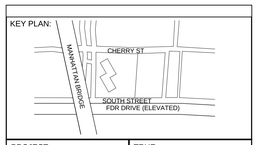

PROJECT NORTH

TRUE NORTH

DEVELOPER:
EXTELL DEVELOPMENT COMPANY
805 Third Ave, 7th Floor
New York, NY 10022
TEL: 212-712-6000 FAX: 212-712-6100

ARCHITECT OF RECORD:
AAI ARCHITECTS, P.C.
14 Wall Street, 2nd Floor
New York, NY 10005
TEL: 212-964-4040 FAX: 212-964-4090

INTERIOR DESIGNER:
MEYER DAVIS
180 Varick St, suite 404
New York, NY 10014
TEL: 212-627-5574

LANDSCAPE DESIGNER:
WEST 8 URBAN DESIGN & LANDSCAPE ARCHITECTURE P.C.
333 Hudson Street, Suite 905
New York, NY 10013
TEL: 212-285-0088 FAX: 212-285-0228

STRUCTURAL ENGINEERS:
WSP
228 East 45th Street
New York, NY 10017
TEL: 212-687-9888 FAX: 646-487-5501

MEP ENGINEERS:
ICOR ASSOCIATES, LLC
485 C Route 1 South, Suite 200
Iseline, NJ 08830
TEL: 908-272-3300 FAX: 908-272-4440

GEOTECHNICAL ENGINEERS:
LANGAN ENGINEERING & ENVIRONMENTAL SERVICES
21 Penn Plaza - 360 West 31st Street, 8th Floor
New York, NY 10001
TEL: 212.479.5400 FAX: 212.479.5444

No.	DESCRIPTION:	DATE:
1	DESIGN DEVELOPMENT	10-07-14
2	STEEL BID PACKAGE	02-24-15
3	ISSUED FOR FILING	03-26-15

Discrepancies must be reported immediately to the Architect before proceeding. Only figured dimensions are to be used. Contractors must check all dimensions on site. This drawing is protected by copyright.

ALL DIMENSIONS ARE SHOWN IN IMPERIAL.

CONSULTANT:
AAI ARCHITECTS, P.C.

PROJECT:
250 SOUTH STREET
NEW YORK, NY

DRAWING TITLE:
3RD FLOOR FRAMING PLAN - PART 4

SEAL & SIGNATURE:
STATE OF NEW YORK
AHMAD RAHIMIAN
No. 085537
LICENSED PROFESSIONAL ENGINEER

DATE:	09/24/14
PROJECT No:	1302510
DRAWN: CAD	REV:
CHK: CL	
SCALE:	
DWG No:	S-034.00
DOB PAGE No:	of

DOB EMPLOYEE STAMP:
Damian Titus
NYC Buildings
APPROVED
Under Directive 2 of 1975
Date: 05/21/2015:
NYC Development Hub

DOB B-SCAN:

DEPT OF BLDGS121185939 Job Number
ES-709826157 Scan Code

30" x 42" Arch E1 - SHEET SIZE

1 S-035 3RD FLOOR FRAMING PLAN - PART 5
SCALE: 3/16" = 1'-0"

FILE NAME:
PLOT DATE:

KEY PLAN:

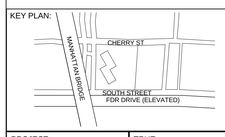

PROJECT NORTH

TRUE NORTH

DEVELOPER:
EXTELL DEVELOPMENT COMPANY
805 Third Ave, 7th Floor
New York, NY 10022
TEL: 212-712-6000 FAX: 212-712-6100

ARCHITECT OF RECORD:
AAI ARCHITECTS, P.C.
14 Wall Street, 2nd Floor
New York, NY 10005
TEL: 212-964-4040 FAX: 212-964-4090

INTERIOR DESIGNER:
MEYER DAVIS
180 Varick St, suite 404
New York, NY 10014
TEL: 212-627-5574

LANDSCAPE DESIGNER:
WEST 8 URBAN DESIGN & LANDSCAPE ARCHITECTURE P.C.
333 Hudson Street, Suite 905
New York, NY 10013
TEL: 212-285-0088 FAX: 212-285-0228

STRUCTURAL ENGINEERS:
WSP
228 East 45th Street
New York, NY 10017
TEL: 212-687-9888 FAX: 646-487-5501

MEP ENGINEERS:
ICOR ASSOCIATES, LLC
485 C Route 1 South, Suite 200
Iseline, NJ 08830
TEL: 908-272-3300 FAX: 908-272-4440

GEOTECHNICAL ENGINEERS:
LANGAN ENGINEERING & ENVIRONMENTAL SERVICES
21 Penn Plaza - 360 West 31st Street, 8th Floor
New York, NY 10001
TEL: 212.479.5400 FAX: 212.479.5444

No.	DESCRIPTION:	DATE:
1	DESIGN DEVELOPMENT	10-07-14
2	STEEL BID PACKAGE	02-24-15
3	ISSUED FOR FILING	03-26-15

Discrepancies must be reported immediately to the Architect before proceeding. Only figured dimensions are to be used. Contractors must check all dimensions on site. This drawing is protected by copyright.

ALL DIMENSIONS ARE SHOWN IN IMPERIAL.

CONSULTANT:
AAI ARCHITECTS, P.C.

PROJECT:
250 SOUTH STREET
NEW YORK, NY

DRAWING TITLE:
3RD FLOOR FRAMING PLAN - PART 5

SEAL & SIGNATURE:
STATE OF NEW YORK ARMAND RAMIREZ No. 065507 LICENSED PROFESSIONAL ENGINEER

DATE:	09/24/14
PROJECT No:	1302510
DRAWN: CAD	REV:
CHK: CL	
SCALE:	
DWG No:	**S-035.00**
DOB PAGE No:	of

DOB EMPLOYEE STAMP:
Damian Titus
Buildings
APPROVED
Under Directive 2 of 1975
Date: 05/21/2015:
NYC Development Hub

DOB B-SCAN:

DEPT OF BLDGS 121185539 Job Number
E500539441189 Scan Code

30" x 42" ANSI E1 SHEET SIZE

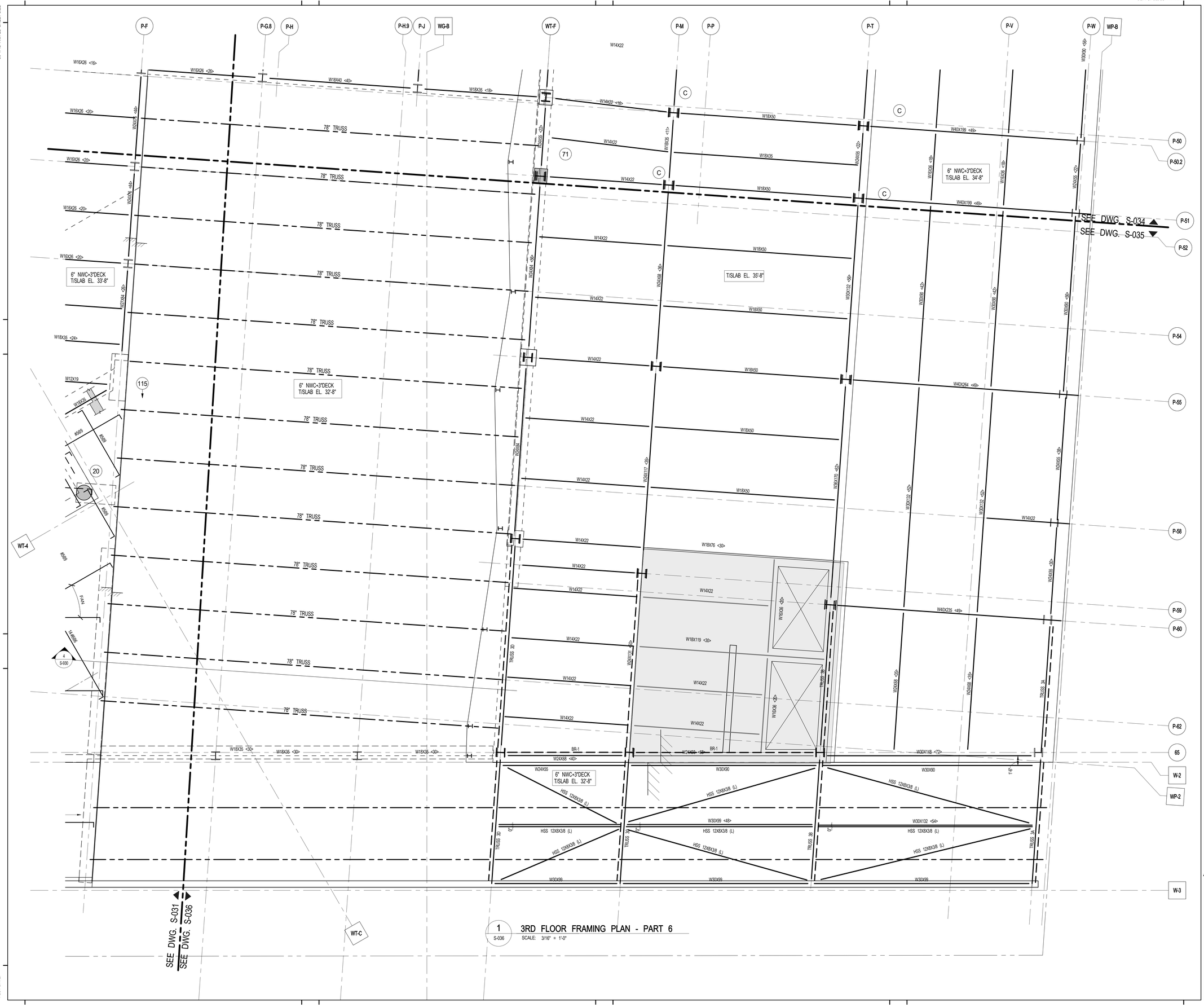

1 S-036 — 3RD FLOOR FRAMING PLAN - PART 6
SCALE: 3/16" = 1'-0"

FILE NAME:
PLOT DATE:

KEY PLAN:

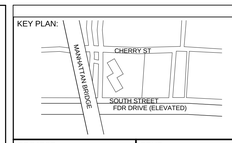

PROJECT NORTH

TRUE NORTH

DEVELOPER:
EXTELL DEVELOPMENT COMPANY
805 Third Ave, 7th Floor
New York, NY 10022
TEL: 212-712-6000 FAX: 212-712-6100

ARCHITECT OF RECORD:
AAI ARCHITECTS, P.C.
14 Wall Street, 2nd Floor
New York, NY 10005
TEL: 212-964-4040 FAX: 212-964-4090

INTERIOR DESIGNER:
MEYER DAVIS
180 Varick St, suite 404
New York, NY 10014
TEL: 212-627-5574

LANDSCAPE DESIGNER:
WEST 8 URBAN DESIGN & LANDSCAPE ARCHITECTURE P.C.
333 Hudson Street, Suite 905
New York, NY 10013
TEL: 212-285-0088 FAX: 212-285-0228

STRUCTURAL ENGINEERS:
WSP
228 East 45th Street
New York, NY 10017
TEL: 212-687-9888 FAX: 646-487-5501

MEP ENGINEERS:
ICOR ASSOCIATES, LLC
485 C Route 1 South, Suite 200
Iseline, NJ 08830
TEL: 908-272-3300 FAX: 908-272-4440

GEOTECHNICAL ENGINEERS:
LANGAN ENGINEERING & ENVIRONMENTAL SERVICES
21 Penn Plaza - 360 West 31st Street, 8th Floor
New York, NY 10001
TEL: 212.479.5400 FAX: 212.479.5444

No.	DESCRIPTION:	DATE:
1	DESIGN DEVELOPMENT	10-07-14
2	STEEL BID PACKAGE	02-24-15
3	ISSUED FOR FILING	03-26-15

Discrepancies must be reported immediately to the Architect before proceeding. Only figured dimensions are to be used. Contractors must check all dimensions on site. This drawing is protected by copyright.

ALL DIMENSIONS ARE SHOWN IN IMPERIAL.

CONSULTANT:
AAI ARCHITECTS, P.C.

PROJECT:
250 SOUTH STREET
NEW YORK, NY

DRAWING TITLE:
3RD FLOOR FRAMING PLAN - PART 6

SEAL & SIGNATURE:
STATE OF NEW YORK — ARNOLD RAMUDAY — LICENSED PROFESSIONAL ENGINEER — No. 085651

DATE:	09/24/14
PROJECT No:	1302510
DRAWN: CAD	REV:
CHK: CL	
SCALE:	
DWG No:	**S-036.00**
DOB PAGE No:	of

DOB EMPLOYEE STAMP:
Damian Titus
Buildings
APPROVED
Under Directive 2 of 1975
Date: 05/21/2015:
NYC Development Hub

DOB B-SCAN:

DEPT OF BLDGS121185539 Job Number
E-5414054507 Scan Code
30" x 42" Anti El. SHEET SIZE

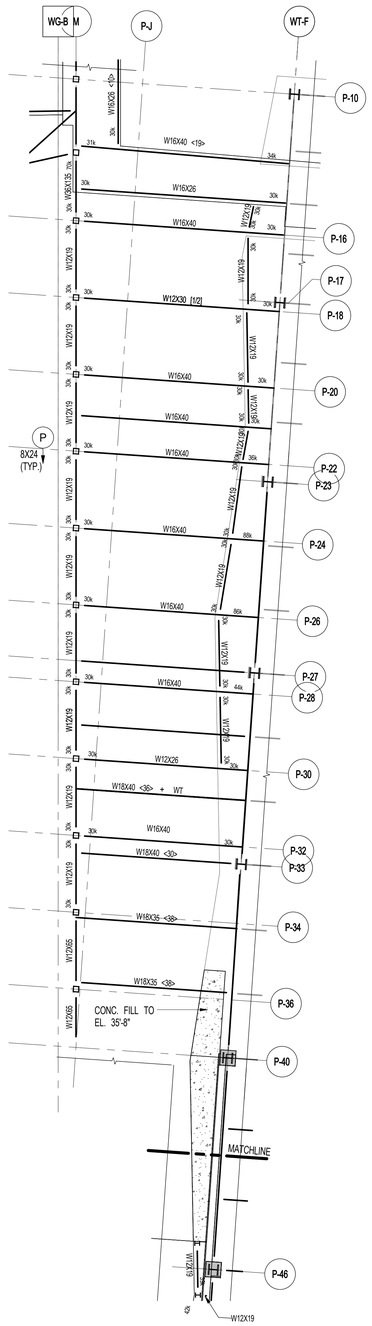

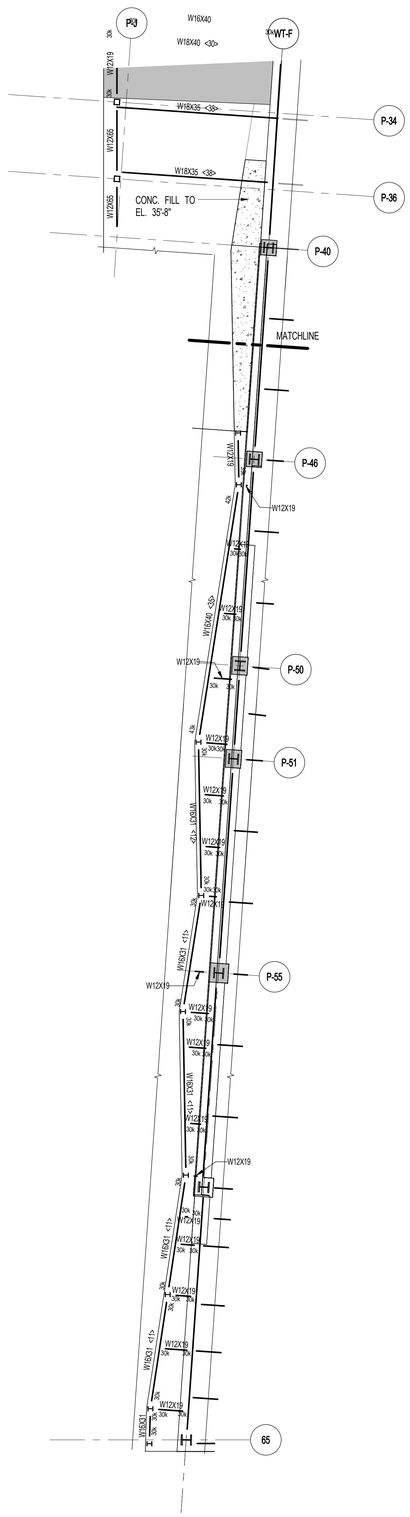

1 S-037 PART FRAMING PLAN AT ELEVATION 35'-8"
SCALE: 1/8" = 1'-0"

KEY PLAN:

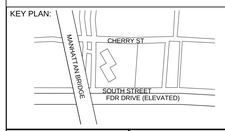

PROJECT NORTH

TRUE NORTH

DEVELOPER:
EXTELL DEVELOPMENT COMPANY
805 Third Ave, 7th Floor
New York, NY 10022
TEL: 212-712-6000 FAX: 212-712-6100

ARCHITECT OF RECORD:
AAI ARCHITECTS, P.C.
14 Wall Street, 2nd Floor
New York, NY 10005
TEL: 212-964-4040 FAX: 212-964-4090

INTERIOR DESIGNER:
MEYER DAVIS
180 Varick St, suite 404
New York, NY 10014
TEL: 212-627-5574

LANDSCAPE DESIGNER:
WEST 8 URBAN DESIGN & LANDSCAPE ARCHITECTURE P.C.
333 Hudson Street, Suite 905
New York, NY 10013
TEL: 212-285-0088 FAX: 212-285-0228

STRUCTURAL ENGINEERS:
WSP
228 East 45th Street
New York, NY 10017
TEL: 212-687-9888 FAX: 646-487-5501

MEP ENGINEERS:
ICOR ASSOCIATES, LLC
485 C Route 1 South, Suite 200
Iseline, NJ 08830
TEL: 908-272-3300 FAX: 908-272-4440

GEOTECHNICAL ENGINEERS:
LANGAN ENGINEERING & ENVIRONMENTAL SERVICES
21 Penn Plaza - 360 West 31st Street, 8th Floor
New York, NY 10001
TEL: 212.479.5400 FAX: 212.479.5444

No.	DESCRIPTION:	DATE:
1	STEEL BID PACKAGE	02-24-15
2	ISSUED FOR FILING	03-26-15

Discrepancies must be reported immediately to the Architect before proceeding. Only figured dimensions are to be used. Contractors must check all dimensions on site. This drawing is protected by copyright.

ALL DIMENSIONS ARE SHOWN IN IMPERIAL.

CONSULTANT:
AAI ARCHITECTS, P.C.

PROJECT:
250 SOUTH STREET
NEW YORK, NY

DRAWING TITLE:
3RD FLOOR RAMP PART FRAMING PLAN

SEAL & SIGNATURE:
STATE OF NEW YORK · ARNOLD RANDALL · No. 085657 · LICENSED PROFESSIONAL ENGINEER

DATE:	02/24/15
PROJECT No:	1302510
DRAWN: CAD	REV:
CHK: CL	
SCALE: 1/8" = 1'-0"	

DWG No:
S-037.00

DOB PAGE No: of

DOB EMPLOYEE STAMP:
Damian Titus
Buildings
APPROVED
Under Directive 2 of 1975
Date: 05/21/2015:
NYC Development Hub

DOB B-SCAN:

FILE NAME:
PLOT DATE:

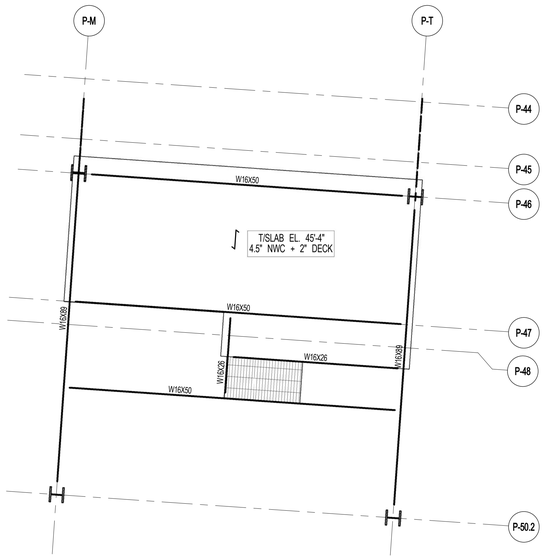

1 S-038 EMR- PART FRAMING PLAN-EL= 45'-4"
SCALE: 3/16" = 1'-0"

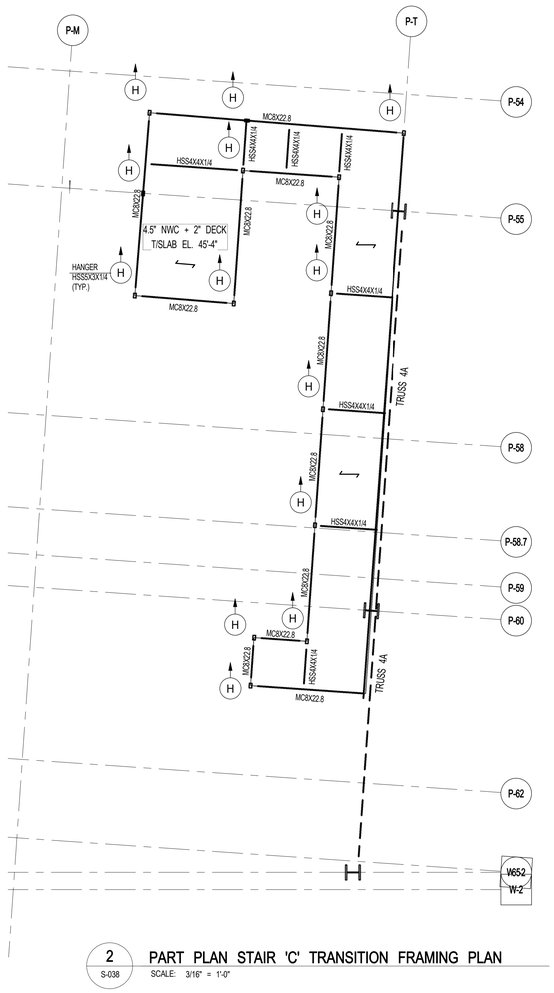

2 S-038 PART PLAN STAIR 'C' TRANSITION FRAMING PLAN
SCALE: 3/16" = 1'-0"

KEY PLAN:

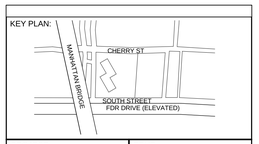

PROJECT NORTH

TRUE NORTH

DEVELOPER:
EXTELL DEVELOPMENT COMPANY
805 Third Ave, 7th Floor
New York, NY 10022
TEL: 212-712-6000 FAX: 212-712-6100

ARCHITECT OF RECORD:
AAI ARCHITECTS, P.C.
14 Wall Street, 2nd Floor
New York, NY 10005
TEL: 212-964-4040 FAX: 212-964-4090

INTERIOR DESIGNER:
MEYER DAVIS
180 Varick St, suite 404
New York, NY 10014
TEL: 212-627-5574

LANDSCAPE DESIGNER:
WEST 8 URBAN DESIGN & LANDSCAPE ARCHITECTURE P.C.
333 Hudson Street, Suite 905
New York, NY 10013
TEL: 212-285-0088 FAX: 212-285-0228

STRUCTURAL ENGINEERS:
WSP
228 East 45th Street
New York, NY 10017
TEL: 212-687-9888 FAX: 646-487-5501

MEP ENGINEERS:
ICOR ASSOCIATES, LLC
485 C Route 1 South, Suite 200
Iseline, NJ 08830
TEL: 908-272-3300 FAX: 908-272-4440

GEOTECHNICAL ENGINEERS:
LANGAN ENGINEERING & ENVIRONMENTAL SERVICES
21 Penn Plaza - 360 West 31st Street, 8th Floor
New York, NY 10001
TEL: 212.479.5400 FAX: 212.479.5444

No.	DESCRIPTION:	DATE:
1	STEEL BID PACKAGE	02-24-15
2	ISSUED FOR FILING	03-26-15

Discrepancies must be reported immediately to the Architect before proceeding. Only figured dimensions are to be used. Contractors must check all dimensions on site. This drawing is protected by copyright.

ALL DIMENSIONS ARE SHOWN IN IMPERIAL.

CONSULTANT:
AAI ARCHITECTS, P.C.

PROJECT:
250 SOUTH STREET
NEW YORK, NY

DRAWING TITLE:
PART FRAMING PLAN AT EL.= 45'-4"

SEAL & SIGNATURE:
STATE OF NEW YORK
AHMAD RAHMANI
No. 085537
LICENSED PROFESSIONAL ENGINEER

DATE:	02/25/15
PROJECT No:	1302510
DRAWN: CAD	REV:
CHK: CL	
SCALE: 3/16" = 1'-0"	
DWG No:	S-038.00
DOB PAGE No:	of

DOB EMPLOYEE STAMP:
Damian Titus
Buildings
APPROVED
Under Directive 2 of 1975
Date: 05/21/2015:
NYC Development Hub

DOB B-SCAN:

30" x 42" Arch E1 - SHEET SIZE
FILE NAME:
PLOT DATE:

DEPT OF BLDGS121185539 Job Number
ES1210983795 Scan Code

30" x 42" Arch E1 - SHEET SIZE

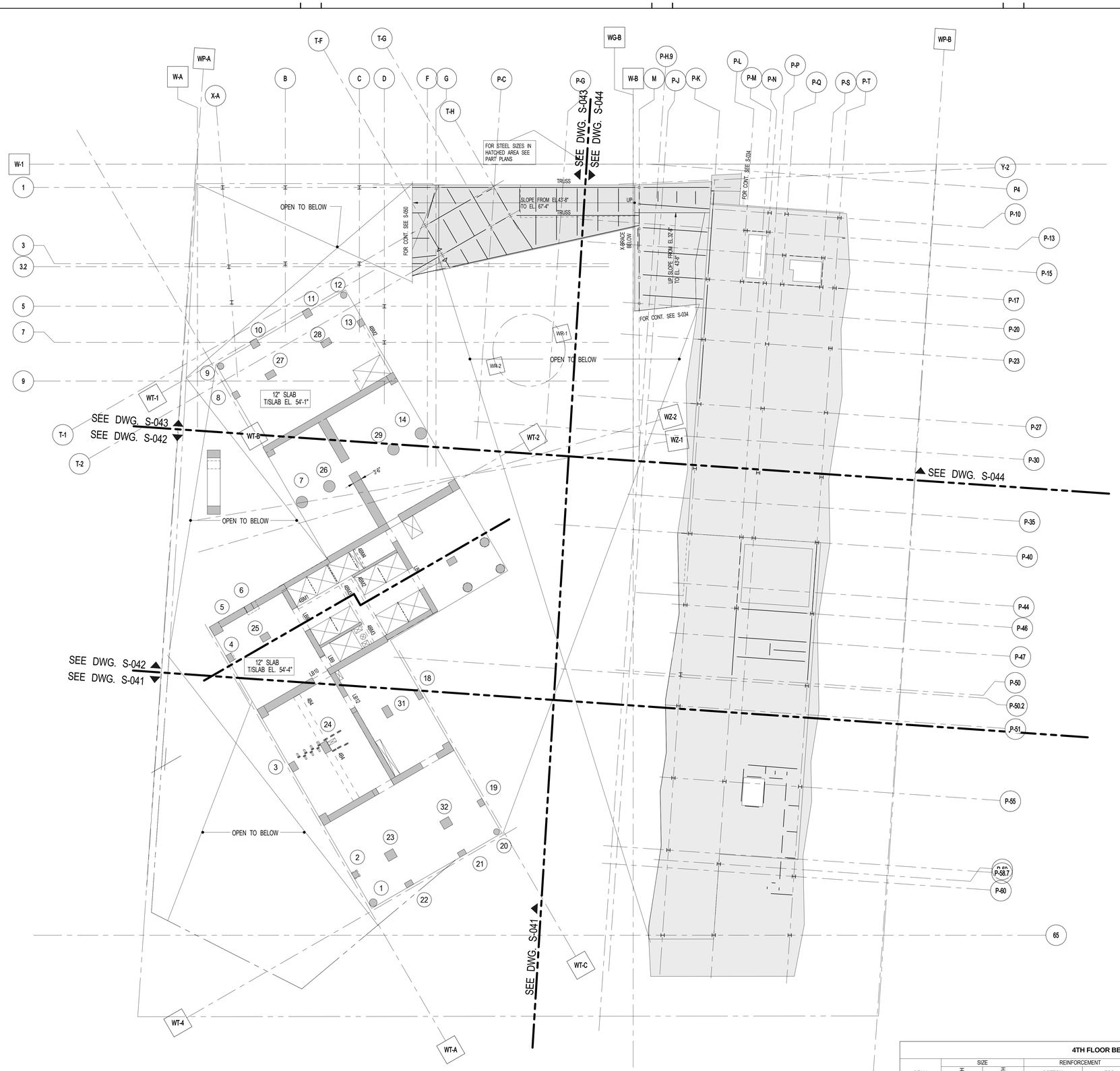

1 S-040 — 4TH FLOOR FRAMING PLAN
SCALE: 1/16" = 1'-0"

CONCRETE NOTES:

1. TOP OF SLAB ELEVATION SEE PLAN.
2. SLAB TO BE 12" THICK U.O.N. THUS ▭ ON PLAN.
3. BOTTOM REINFORCEMENT TO BE #5@12 CONT. E.W. FOR 12" SLAB, FOR ADDITIONAL REIFORCEMENT SEE PLAN
4. FOR DETAILS OF THE INTEGRITY REINFORCEMENT SEE DRAWING S-965.
5. FOR BALANCE OF NOTES SEE DRAWING S-010.

STEEL NOTES

1. TOP OF SLAB AT STEEL CONSTRUCTION SHALL BE 57-10".
2. SLAB CONSTRUCTION SHALL BE 15" NORMAL WEIGHT CONCRETE ON TOP OF 3" 18GA. (Fy=50 KSI) COMPOSITE GALVANIZED METAL DECK (TOTAL SLAB DEPTH - 18") REINFORCED WITH #6@12 T&B E.W.
3. STUDS SHALL BE 3/4" Ø x 8" LONG. ALL STEEL BEAMS SHALL HAVE MIN 1 STUD/FT. U.O.N. THUS <.> ON PLAN

4TH FLOOR BEAM SCHEDULE

BEAM MARK	SIZE WIDTH	SIZE DEPTH	REINFORCEMENT BOTTOM CONTINUOUS	REINFORCEMENT TOP CONTINUOUS	STIRRUPS TYPE	STIRRUPS SIZE	STIRRUPS SPACING	REMARKS
4B4	32	12	8-#7	8-#7	2	#4	@5	EXTEND TOP BARS INTO SLAB
4BM1	12	24	2-#11	2-#11	1	#4	@6	
4BM2	12	24	3-#11	2-#11	1	#4	@10	
4BM3	12	24	2-#9	2-#9	1	#4	@10	
4BM4	8	12	2-#6	2-#6	1	#3	@5	

TYPE 1 TYPE 2

STIRRUP TYPES

KEY PLAN:

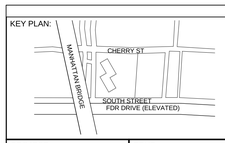

PROJECT NORTH

TRUE NORTH

DEVELOPER:
EXTELL DEVELOPMENT COMPANY
805 Third Ave, 7th Floor
New York, NY 10022
TEL: 212-712-6000 FAX: 212-712-6100

ARCHITECT OF RECORD:
AAI ARCHITECTS, P.C.
14 Wall Street, 2nd Floor
New York, NY 10005
TEL: 212-964-4040 FAX: 212-964-4090

INTERIOR DESIGNER:
MEYER DAVIS
180 Varick St, suite 404
New York, NY 10014
TEL: 212-627-5574

LANDSCAPE DESIGNER:
WEST 8 URBAN DESIGN & LANDSCAPE ARCHITECTURE P.C.
333 Hudson Street, Suite 905
New York, NY 10013
TEL: 212-285-0088 FAX: 212-285-0228

STRUCTURAL ENGINEERS:
WSP
228 East 45th Street
New York, NY 10017
TEL: 212-687-9888 FAX: 646-487-5501

MEP ENGINEERS:
ICOR ASSOCIATES, LLC
485 C Route 1 South, Suite 200
Iseline, NJ 08830
TEL: 908-272-3300 FAX: 908-272-4440

GEOTECHNICAL ENGINEERS:
LANGAN ENGINEERING & ENVIRONMENTAL SERVICES
21 Penn Plaza - 360 West 31st Street, 8th Floor
New York, NY 10001
TEL: 212.479.5400 FAX: 212.479.5444

No.	DESCRIPTION:	DATE:
1	50% SD	02-28-14
2	100%SD	04-25-14
3	50% DD	08-01-14
4	DESIGN DEVELOPMENT	10-07-14
5	STEEL BID PACKAGE	02-24-15
6	CONCRETE BID PACKAGE	03-06-15
7	ISSUED FOR FILING	03-26-15

Discrepancies must be reported immediately to the Architect before proceeding. Only figured dimensions are to be used. Contractors must check all dimensions on site. This drawing is protected by copyright.

ALL DIMENSIONS ARE SHOWN IN IMPERIAL.

CONSULTANT:
AAI ARCHITECTS, P.C.

PROJECT:
250 SOUTH STREET
NEW YORK, NY

DRAWING TITLE:
4TH FLOOR OVERALL FRAMING PLAN

SEAL & SIGNATURE:

DATE: 02/24/14
PROJECT No: 1302510
DRAWN: CAD REV:
CHK: CL
SCALE:
DWG No: **S-040.00**
DOB PAGE No: of

DOB EMPLOYEE STAMP:

DOB B-SCAN:

FILE NAME:
PLOT DATE:

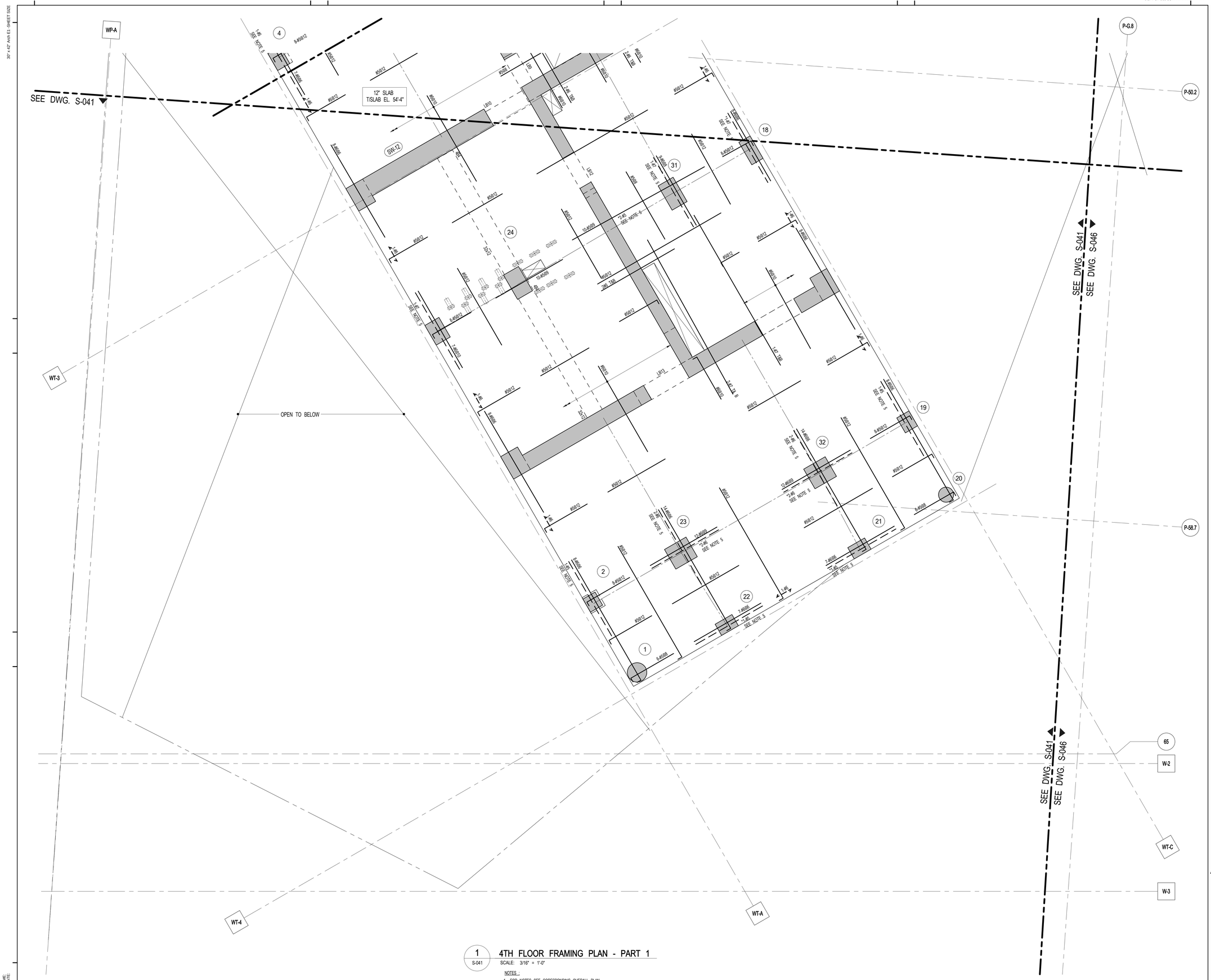

1 S-041 4TH FLOOR FRAMING PLAN - PART 1

SCALE: 3/16" = 1'-0"

NOTES :

1. FOR NOTES SEE CORESPONDING OVERALL PLAN

KEY PLAN:

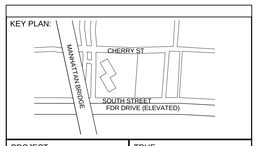

PROJECT NORTH

TRUE NORTH

DEVELOPER:
EXTELL DEVELOPMENT COMPANY
805 Third Ave, 7th Floor
New York, NY 10022
TEL: 212-712-6000 FAX: 212-712-6100

ARCHITECT OF RECORD:
AAI ARCHITECTS, P.C.
14 Wall Street, 2nd Floor
New York, NY 10005
TEL: 212-964-4040 FAX: 212-964-4090

INTERIOR DESIGNER:
MEYER DAVIS
180 Varick St, suite 404
New York, NY 10014
TEL: 212-627-5574

LANDSCAPE DESIGNER:
WEST 8 URBAN DESIGN & LANDSCAPE ARCHITECTURE P.C.
333 Hudson Street, Suite 905
New York, NY 10013
TEL: 212-285-0088 FAX: 212-285-0228

STRUCTURAL ENGINEERS:
WSP
228 East 45th Street
New York, NY 10017
TEL: 212-687-9888 FAX: 646-487-5501

MEP ENGINEERS:
ICOR ASSOCIATES, LLC
485 C Route 1 South, Suite 200
Iseline, NJ 08830
TEL: 908-272-3300 FAX: 908-272-4440

GEOTECHNICAL ENGINEERS:
LANGAN ENGINEERING & ENVIRONMENTAL SERVICES
21 Penn Plaza - 360 West 31st Street, 8th Floor
New York, NY 10001
TEL: 212.479.5400 FAX: 212.479.5444

No.	DESCRIPTION:	DATE:
1	DESIGN DEVELOPMENT	10-07-14
2	STEEL BID PACKAGE	02-24-15
3	CONCRETE BID PACKAGE	03-06-15
4	ISSUED FOR FILING	03-26-15

Discrepancies must be reported immediately to the Architect before proceeding. Only figured dimensions are to be used. Contractors must check all dimensions on site. This drawing is protected by copyright.

ALL DIMENSIONS ARE SHOWN IN IMPERIAL.

CONSULTANT:
AAI ARCHITECTS, P.C.

PROJECT:
250 SOUTH STREET
NEW YORK, NY

DRAWING TITLE:
4TH FLOOR FRAMING PLAN - PART 1

SEAL & SIGNATURE:
STATE OF NEW YORK
AHMAD RAHIMIAN
No. 085537
LICENSED PROFESSIONAL ENGINEER

DATE:	09/24/14
PROJECT No:	1302510
DRAWN: CAD	REV:
CHK: CL	
SCALE:	
DWG No:	S-041.00
DOB PAGE No:	of

DOB EMPLOYEE STAMP:
Damian Titus
Buildings
APPROVED
Under Directive 2 of 1975
Date: 05/21/2015:
NYC Development Hub

DOB B-SCAN:

DEPT OF BLDGS121185539 Job Number
E:S1399095135 Scan Code
30" x 42" Arch E1 SHEET SIZE

1 S-042 4TH FLOOR FRAMING PLAN - PART 2
SCALE: 3/16" = 1'-0"

KEY PLAN:

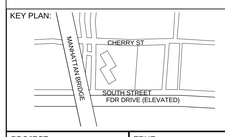

PROJECT NORTH

TRUE NORTH

DEVELOPER:
EXTELL DEVELOPMENT COMPANY
805 Third Ave, 7th Floor
New York, NY 10022
TEL: 212-712-6000 FAX: 212-712-6100

ARCHITECT OF RECORD:
AAI ARCHITECTS, P.C.
14 Wall Street, 2nd Floor
New York, NY 10005
TEL: 212-964-4040 FAX: 212-964-4090

INTERIOR DESIGNER:
MEYER DAVIS
180 Varick St, suite 404
New York, NY 10014
TEL: 212-627-5574

LANDSCAPE DESIGNER:
WEST 8 URBAN DESIGN & LANDSCAPE ARCHITECTURE P.C.
333 Hudson Street, Suite 905
New York, NY 10013
TEL: 212-285-0088 FAX: 212-285-0228

STRUCTURAL ENGINEERS:
WSP
228 East 45th Street
New York, NY 10017
TEL: 212-687-9888 FAX: 646-487-5501

MEP ENGINEERS:
ICOR ASSOCIATES, LLC
485 C Route 1 South, Suite 200
Iseline, NJ 08830
TEL: 908-272-3300 FAX: 908-272-4440

GEOTECHNICAL ENGINEERS:
LANGAN ENGINEERING & ENVIRONMENTAL SERVICES
21 Penn Plaza - 360 West 31st Street, 8th Floor
New York, NY 10001
TEL: 212.479.5400 FAX: 212.479.5444

No.	DESCRIPTION:	DATE:
1	DESIGN DEVELOPMENT	10-07-14
2	STEEL BID PACKAGE	02-24-15
3	CONCRETE BID PACKAGE	03-06-15
4	ISSUED FOR FILING	03-26-15

Discrepancies must be reported immediately to the Architect before proceeding. Only figured dimensions are to be used. Contractors must check all dimensions on site. This drawing is protected by copyright.

ALL DIMENSIONS ARE SHOWN IN IMPERIAL.

CONSULTANT:
AAI ARCHITECTS, P.C.

PROJECT:
250 SOUTH STREET
NEW YORK, NY

DRAWING TITLE:
4TH FLOOR FRAMING PLAN - PART 2

SEAL & SIGNATURE:
STATE OF NEW YORK · ARMAD RAMNARAN · LICENSED PROFESSIONAL ENGINEER · No. 085607

DATE:	09/24/14
PROJECT No:	1302510
DRAWN: CAD	REV:
CHK: CL	
SCALE:	
DWG No:	**S-042.00**
DOB PAGE No: of	

DOB EMPLOYEE STAMP:
Damian Titus
Buildings
APPROVED
Under Directive 2 of 1975
Date: 05/21/2015:
NYC Development Hub

DOB B-SCAN:

FILE NAME:
PLOT DATE:

DEPT OF BLDGS121185539 Job Number
ES-7964396B2 Scan Code
30" x 42" Arch E1 SHEET SIZE

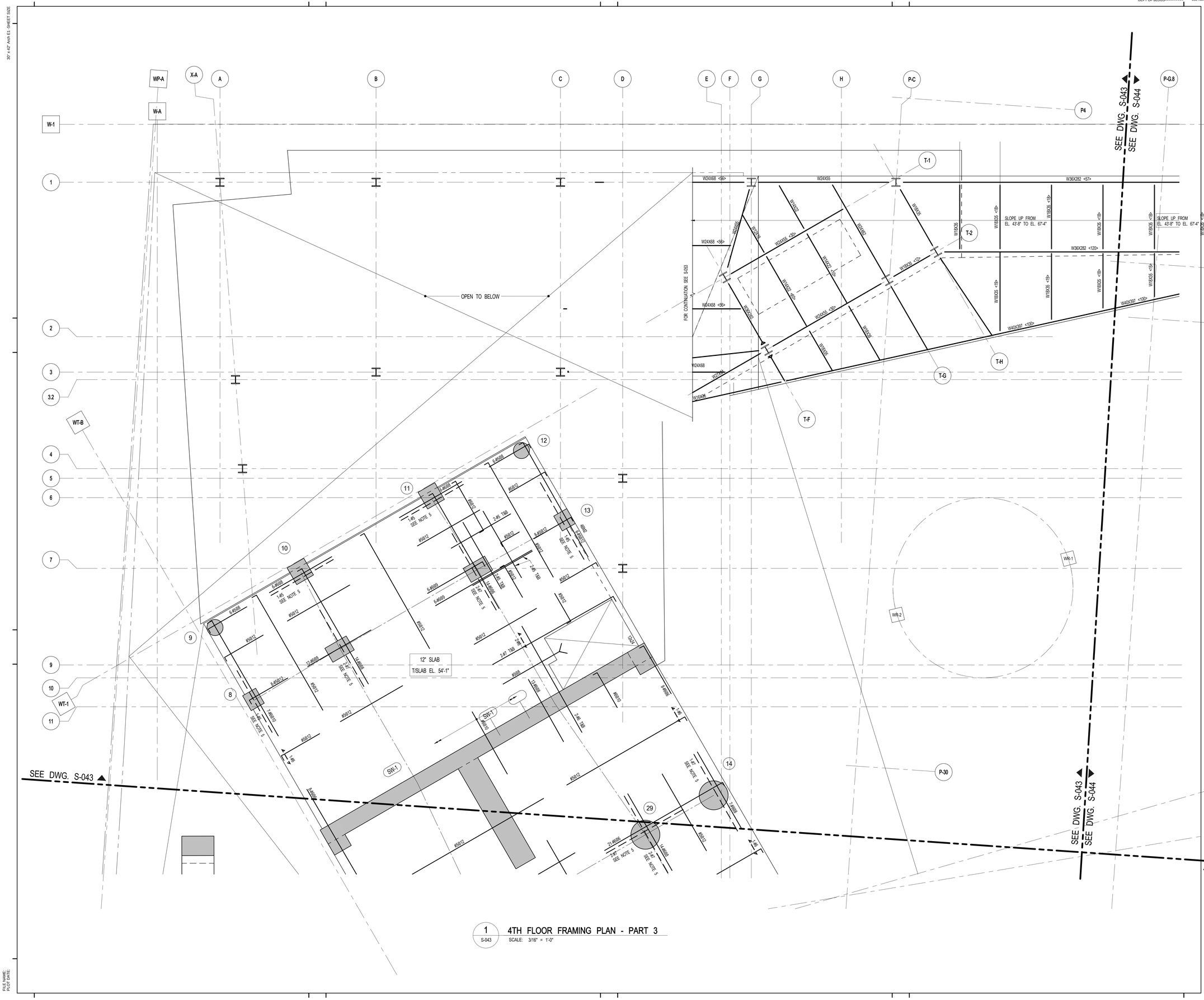

1 S-043 — 4TH FLOOR FRAMING PLAN - PART 3
SCALE: 3/16" = 1'-0"

KEY PLAN:

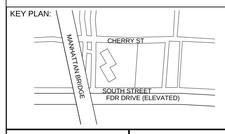

PROJECT NORTH

TRUE NORTH

DEVELOPER:
EXTELL DEVELOPMENT COMPANY
805 Third Ave, 7th Floor
New York, NY 10022
TEL: 212-712-6000 FAX: 212-712-6100

ARCHITECT OF RECORD:
AAI ARCHITECTS, P.C.
14 Wall Street, 2nd Floor
New York, NY 10005
TEL: 212-964-4040 FAX: 212-964-4090

INTERIOR DESIGNER:
MEYER DAVIS
180 Varick St, suite 404
New York, NY 10014
TEL: 212-627-5574

LANDSCAPE DESIGNER:
WEST 8 URBAN DESIGN & LANDSCAPE ARCHITECTURE P.C.
333 Hudson Street, Suite 905
New York, NY 10013
TEL: 212-285-0088 FAX: 212-285-0228

STRUCTURAL ENGINEERS:
P-13
WSP
228 East 45th Street
New York, NY 10017
TEL: 212-687-9888 FAX: 646-487-5501

MEP ENGINEERS:
ICOR ASSOCIATES, LLC
485 C Route 1 South, Suite 200
Iselin, NJ 08830
TEL: 908-272-3300 FAX: 908-272-4440

GEOTECHNICAL ENGINEERS:
P-15
LANGAN ENGINEERING & ENVIRONMENTAL SERVICES
21 Penn Plaza - 360 West 31st Street, 8th Floor
New York, NY 10001
TEL: 212.479.5400 FAX: 212.479.5444

No.	DESCRIPTION:	DATE:
1	DESIGN DEVELOPMENT	10-07-14
2	STEEL BID PACKAGE	02-24-15
3	CONCRETE BID PACKAGE	03-06-15
4	ISSUED FOR FILING	03-26-15

Discrepancies must be reported immediately to the Architect before proceeding. Only figured dimensions are to be used. Contractors must check all dimensions on site. This drawing is protected by copyright.

ALL DIMENSIONS ARE SHOWN IN IMPERIAL.

CONSULTANT:
AAI ARCHITECTS, P.C.

PROJECT:
250 SOUTH STREET
NEW YORK, NY

DRAWING TITLE:
4TH FLOOR FRAMING PLAN - PART 3

SEAL & SIGNATURE:
STATE OF NEW YORK — ARNOLD RAPHAEL — LICENSED PROFESSIONAL ENGINEER — NO. 085651

DATE:	09/24/14
PROJECT No:	1302510
DRAWN: CAD	REV:
CHK: CL	
SCALE:	
DWG No:	**S-043.00**
DOB PAGE No:	of

DOB EMPLOYEE STAMP:
Damian Titus
Buildings
APPROVED
Under Directive 2 of 1975
Date: 05/21/2015:
NYC Development Hub

DOB B-SCAN:

FILE NAME:
PLOT DATE:

DEPT OF BLDGS 121105539 Job Number
E1562126445.01 Scan Code
30" x 42" Arch E1 - SHEET SIZE

1 S-044 — 4TH FLOOR FRAMING PLAN - PART 4
SCALE: 3/16" = 1'-0"

FILE NAME:
PLOT DATE:

KEY PLAN:

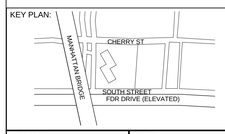

PROJECT NORTH

TRUE NORTH

DEVELOPER:
EXTELL DEVELOPMENT COMPANY
805 Third Ave, 7th Floor
New York, NY 10022
TEL: 212-712-6000 FAX: 212-712-6100

ARCHITECT OF RECORD:
AAI ARCHITECTS, P.C.
14 Wall Street, 2nd Floor
New York, NY 10005
TEL: 212-964-4040 FAX: 212-964-4090

INTERIOR DESIGNER:
MEYER DAVIS
180 Varick St, suite 404
New York, NY 10014
TEL: 212-627-5574

LANDSCAPE DESIGNER:
WEST 8 URBAN DESIGN & LANDSCAPE ARCHITECTURE P.C.
333 Hudson Street, Suite 905
New York, NY 10013
TEL: 212-285-0088 FAX: 212-285-0228

STRUCTURAL ENGINEERS:
WSP
228 East 45th Street
New York, NY 10017
TEL: 212-687-9888 FAX: 646-487-5501

MEP ENGINEERS:
ICOR ASSOCIATES, LLC
485 C Route 1 South, Suite 200
Iseline, NJ 08830
TEL: 908-272-3300 FAX: 908-272-4440

GEOTECHNICAL ENGINEERS:
LANGAN ENGINEERING & ENVIRONMENTAL SERVICES
21 Penn Plaza - 360 West 31st Street, 8th Floor
New York, NY 10001
TEL: 212.479.5400 FAX: 212.479.5444

No.	DESCRIPTION:	DATE:
1	DESIGN DEVELOPMENT	10-07-14
2	ISSUED FOR FILING	03-26-15

Discrepancies must be reported immediately to the Architect before proceeding. Only figured dimensions are to be used. Contractors must check all dimensions on site. This drawing is protected by copyright.

ALL DIMENSIONS ARE SHOWN IN IMPERIAL.

CONSULTANT:
AAI ARCHITECTS, P.C.

PROJECT:
250 SOUTH STREET
NEW YORK, NY

DRAWING TITLE:
4TH FLOOR FRAMING PLAN - PART 4

SEAL & SIGNATURE:

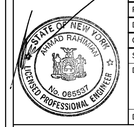

DATE:	09/24/14
PROJECT No:	1302510
DRAWN: CAD	REV:
CHK: CL	
SCALE:	
DWG No:	**S-044.00**
DOB PAGE No:	of

DOB EMPLOYEE STAMP:

DOB B-SCAN:

1 S-045 4TH FLOOR FRAMING PLAN - PART 5
SCALE: 3/16" = 1'-0"

KEY PLAN:

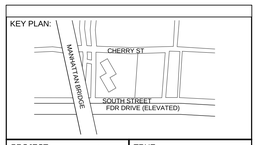

PROJECT NORTH

TRUE NORTH

DEVELOPER:
EXTELL DEVELOPMENT COMPANY
805 Third Ave, 7th Floor
New York, NY 10022
TEL: 212-712-6000 FAX: 212-712-6100

ARCHITECT OF RECORD:
AAI ARCHITECTS, P.C.
14 Wall Street, 2nd Floor
New York, NY 10005
TEL: 212-964-4040 FAX: 212-964-4090

INTERIOR DESIGNER:
MEYER DAVIS
180 Varick St, suite 404
New York, NY 10014
TEL: 212-627-5574

LANDSCAPE DESIGNER:
WEST 8 URBAN DESIGN & LANDSCAPE ARCHITECTURE P.C.
333 Hudson Street, Suite 905
New York, NY 10013
TEL: 212-285-0088 FAX: 212-285-0228

STRUCTURAL ENGINEERS:
WSP
228 East 45th Street
New York, NY 10017
TEL: 212-687-9888 FAX: 646-487-5501

MEP ENGINEERS:
ICOR ASSOCIATES, LLC
485 C Route 1 South, Suite 200
Iseline, NJ 08830
TEL: 908-272-3300 FAX: 908-272-4440

GEOTECHNICAL ENGINEERS:
LANGAN ENGINEERING & ENVIRONMENTAL SERVICES
21 Penn Plaza - 360 West 31st Street, 8th Floor
New York, NY 10001
TEL: 212.479.5400 FAX: 212.479.5444

No.	DESCRIPTION:	DATE:
1	STEEL BID PACKAGE	02-24-15
2	ISSUED FOR FILING	03-26-15

Discrepancies must be reported immediately to the Architect before proceeding. Only figured dimensions are to be used. Contractors must check all dimensions on site. This drawing is protected by copyright.

ALL DIMENSIONS ARE SHOWN IN IMPERIAL.

CONSULTANT:
AAI ARCHITECTS, P.C.

PROJECT:
250 SOUTH STREET
NEW YORK, NY

DRAWING TITLE:
4TH FLOOR FRAMING PLAN - PART 5

SEAL & SIGNATURE:
STATE OF NEW YORK
AHMAD RAHIMIAN
No. 085537
LICENSED PROFESSIONAL ENGINEER

DATE:	02/20/15
PROJECT No:	1302510
DRAWN: CAD	REV:
CHK: CL	
SCALE: 3/16" = 1'-0"	
DWG No:	S-045
DOB PAGE No:	of

DOB EMPLOYEE STAMP:
Damian Titus
Buildings
APPROVED
Under Directive 2 of 1975
Date: 05/21/2015:
NYC Development Hub

DOB B-SCAN:

30" x 42" Arch E1 - SHEET SIZE

FILE NAME:
PLOT DATE:

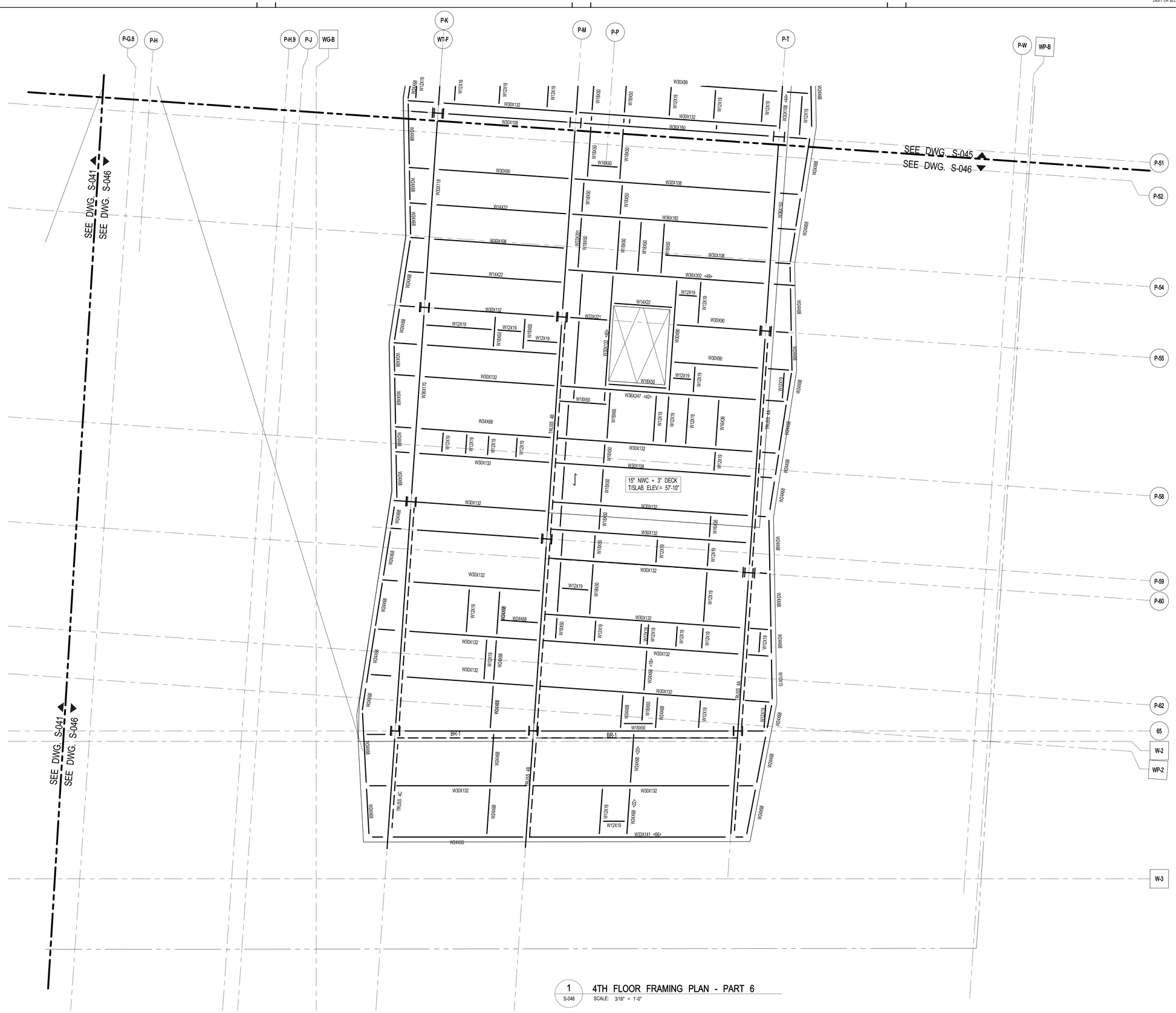

1 S-046 4TH FLOOR FRAMING PLAN - PART 6
SCALE: 3/16" = 1'-0"

KEY PLAN:

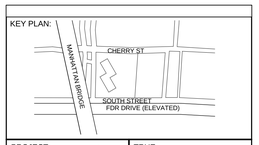

PROJECT NORTH

TRUE NORTH

DEVELOPER:
EXTELL DEVELOPMENT COMPANY
805 Third Ave, 7th Floor
New York, NY 10022
TEL: 212-712-6000 FAX: 212-712-6100

ARCHITECT OF RECORD:
AAI ARCHITECTS, P.C.
14 Wall Street, 2nd Floor
New York, NY 10005
TEL: 212-964-4040 FAX: 212-964-4090

INTERIOR DESIGNER:
MEYER DAVIS
180 Varick St, suite 404
New York, NY 10014
TEL: 212-627-5574

LANDSCAPE DESIGNER:
WEST 8 URBAN DESIGN & LANDSCAPE ARCHITECTURE P.C.
333 Hudson Street, Suite 905
New York, NY 10013
TEL: 212-285-0088 FAX: 212-285-0228

STRUCTURAL ENGINEERS:
WSP
228 East 45th Street
New York, NY 10017
TEL: 212-687-9888 FAX: 646-487-5501

MEP ENGINEERS:
ICOR ASSOCIATES, LLC
485 C Route 1 South, Suite 200
Iseline, NJ 08830
TEL: 908-272-3300 FAX: 908-272-4440

GEOTECHNICAL ENGINEERS:
LANGAN ENGINEERING & ENVIRONMENTAL SERVICES
21 Penn Plaza - 360 West 31st Street, 8th Floor
New York, NY 10001
TEL: 212.479.5400 FAX: 212.479.5444

No.	DESCRIPTION:	DATE:
1	STEEL BID PACKAGE	02-24-15
2	ISSUED FOR FILING	03-26-15

Discrepancies must be reported immediately to the Architect before proceeding. Only figured dimensions are to be used. Contractors must check all dimensions on site. This drawing is protected by copyright.

ALL DIMENSIONS ARE SHOWN IN IMPERIAL.

CONSULTANT:
AAI ARCHITECTS, P.C.

PROJECT:
250 SOUTH STREET
NEW YORK, NY

DRAWING TITLE:
4TH FLOOR FRAMING PLAN - PART 6

SEAL & SIGNATURE:
STATE OF NEW YORK
AHMAD RAHIMIAN
No. 085537
LICENSED PROFESSIONAL ENGINEER

DATE:	02/20/15
PROJECT No:	1302510
DRAWN: CAD	REV:
CHK: CL	
SCALE: 3/16" = 1'-0"	
DWG No:	S-046
DOB PAGE No:	of

DOB EMPLOYEE STAMP:
Damian Titus
NYC Buildings
APPROVED
Under Directive 2 of 1975
Date: 05/21/2015:
NYC Development Hub

DOB B-SCAN:

1 5TH FLOOR FRAMING PLAN

S-050

SCALE: 1/16" = 1'-0"

CONCRETE NOTES:

1. TOP OF SLAB ELEVATION SEE PLAN
2. SLAB TO BE 12" THICK U.O.N. THUS [......] ON PLAN.
3. BOTTOM REINFORCEMENT TO BE #5@12 CONT. E.W. FOR 12" SLAB, FOR ADDITIONAL REIFORCEMENT SEE PLAN
4. FOR DETAILS OF THE INTEGRITY REINFORCEMENT SEE DRAWING S-965.
5. FOR BALANCE OF NOTES SEE DRAWING S-010.

5TH FLOOR BEAM SCHEDULE

BEAM MARK	SIZE: WIDTH	SIZE: DEPTH	REINFORCEMENT: BOTTOM CONTINUOUS	REINFORCEMENT: TOP CONTINUOUS	STIRRUPS: TYPE	STIRRUPS: SIZE	STIRRUPS: SPACING	REMARKS
5B1	30	133	6-#9	6-#9	1B	#5	@12	#6@10 HORIZ. E.F., CONT.
5B2	30	94/133	6-#9	6-#9	1B	#5	@12	#6@10 HORIZ. E.F., CONT.
5B3	18	58	3-#9	3-#9	1	#4	@12	#4@8 HORIZ. E.F., CONT.
5B4	16	58	2-#9	2-#7	1	#4	@12	#4@8 HORIZ. E.F., CONT.
5B5	16	58	2-#9	2-#9	1	#4	@12	#4@8 HORIZ. E.F., CONT.
5B6	28	114	4-#9	4-#9	1	#5	@12	#6@10 HORIZ. E.F., CONT.
5B7	28	102	4-#9	4-#9	1	#5	@12	#6@10 HORIZ. E.F., CONT.
5B8	26	115/133	4-#9	4-#9	1	#5	@12	#6@10 HORIZ. E.F., CONT.
5B9	26	99/133	4-#9	4-#9	1	#5	@12	#6@10 HORIZ. E.F., CONT.
5B10	26	133	4-#9	4-#9	1	#5	@12	#6@10 HORIZ. E.F., CONT.
5B11	26	150	4-#9	4-#9	1	#5	@12	#6@10 HORIZ. E.F., CONT.
5B12	26	150	4-#9	4-#9	1	#5	@12	#6@10 HORIZ. E.F., CONT.
5B13	12	48	4-#8 (2 LAYERS)	4-#8 (2 LAYERS)	1	#4	@12	#5@10 HORIZ. E.F., CONT.
5B14	24	48/ 66	4-#8	8-#11 (2 LAYERS)	2	#4	@12	#5@10 HORIZ. E.F., SEE NOTE
5B15	24	48	4-#8	8-#11 (2 LAYERS)	2	#4	@12	#5@10 HORIZ. E.F., CONT.
5B16	24	48	6-#11 (2 LAYERS)	3-#11	1B	#4	@12	#4@10 HORIZ. E.F., CONT ADD'L. REBAR SHOWN ON PLAN.
5B17	24	24	3-#11	2-#8	1	#4	@10	
5B18	24	48	3-#9	3-#11	1	#4	@12	#4@10 HORIZ. E.F., CONT.
5B19	24	48	3-#9	6-#11 (2 LAYERS)	1	#4	@12	#4@10 HORIZ. E.F., CONT.
5B20	36	66	6-#11	6-#11	1B	#4	@12	#5@10 HORIZ. E.F., CONT.
5B21	30	30	3-#11	3-#11	1B	#4	@12	
5B22	24	60						
5B23	26	60/78	3-#11	6-#11 (2 LAYERS)	1B	#4	@12	#5@10 HORIZ. E.F., CONT.
5B24	56	60	10-#11	10-#11	3	#4	@10	#7@10 HORIZ. E.F., CONT.
5BM1	12	24	3-#11	2-#11	1	#4	@10	
5BM2	12	24	2-#9	2-#9	1	#4	@10	
5BM3	12	24	2-#11	2-#11	1	#4	@6	
5BM4	8	12	2-#6	2-#6	1	#3	@5	

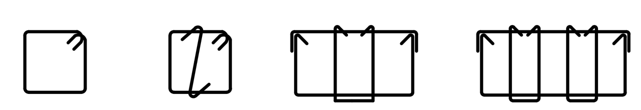

STIRRUP TYPES

KEY PLAN:

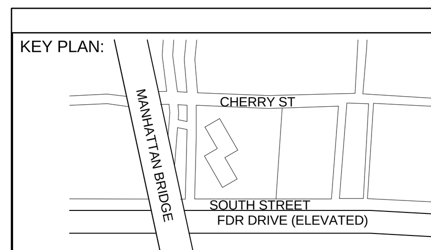

PROJECT NORTH

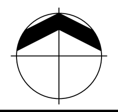

TRUE NORTH

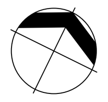

DEVELOPER:
EXTELL DEVELOPMENT COMPANY
805 Third Ave, 7th Floor
New York, NY 10022
TEL: 212-712-6000 FAX: 212-712-6100

ARCHITECT OF RECORD:
AAI ARCHITECTS, P.C.
14 Wall Street, 2nd Floor
New York, NY 10005
TEL: 212-964-4040 FAX: 212-964-4090

INTERIOR DESIGNER:
MEYER DAVIS
180 Varick St, suite 404
New York, NY 10014
TEL: 212-627-5574

LANDSCAPE DESIGNER:
WEST 8 URBAN DESIGN & LANDSCAPE ARCHITECTURE P.C.
333 Hudson Street, Suite 905
New York, NY 10013
TEL: 212-285-0088 FAX: 212-285-0228

STRUCTURAL ENGINEERS:
WSP
228 East 45th Street
New York, NY 10017
TEL: 212-687-9888 FAX: 646-487-5501

MEP ENGINEERS:
ICOR ASSOCIATES, LLC
485 C Route 1 South, Suite 200
Iselin, NJ 08830
TEL: 908-272-3300 FAX: 908-272-4440

GEOTECHNICAL ENGINEERS:
LANGAN ENGINEERING & ENVIRONMENTAL SERVICES
21 Penn Plaza - 360 West 31st Street, 8th Floor
New York, NY 10001
TEL: 212.479.5400 FAX: 212.479.5444

No.	DESCRIPTION:	DATE:
1	50% SD	02-28-14
2	100%SD	04-25-14
3	50% DD	08-01-14
4	DESIGN DEVELOPMENT	10-07-14
5	STEEL BID PACKAGE	02-24-15
6	CONCRETE BID PACKAGE	03-06-15
7	ISSUED FOR FILING	03-26-15

Discrepancies must be reported immediately to the Architect before proceeding. Only figured dimensions are to be used. Contractors must check all dimensions on site. This drawing is protected by copyright.

ALL DIMENSIONS ARE SHOWN IN IMPERIAL.

CONSULTANT: AAI ARCHITECTS, P.C.

PROJECT:
250 SOUTH STREET
NEW YORK, NY

DRAWING TITLE:
5TH FLOOR OVERALL FRAMING PLAN

SEAL & SIGNATURE:

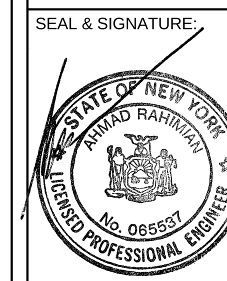

DATE:	02/24/14
PROJECT No:	1302510
DRAWN:	CAD
CHK:	CL
SCALE:	
DWG No:	S-050.00
DOB PAGE No:	of

REV:

DOB EMPLOYEE STAMP:

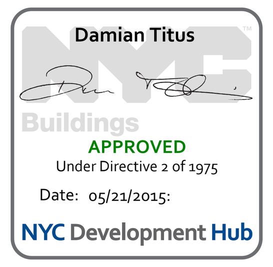

DOB B-SCAN:

DEPT OF BLDGS 121185528 Job Number
E5216411713 Scan Code

30" x 42" Arch E1 - SHEET SIZE
FILE NAME:
PLOT DATE:

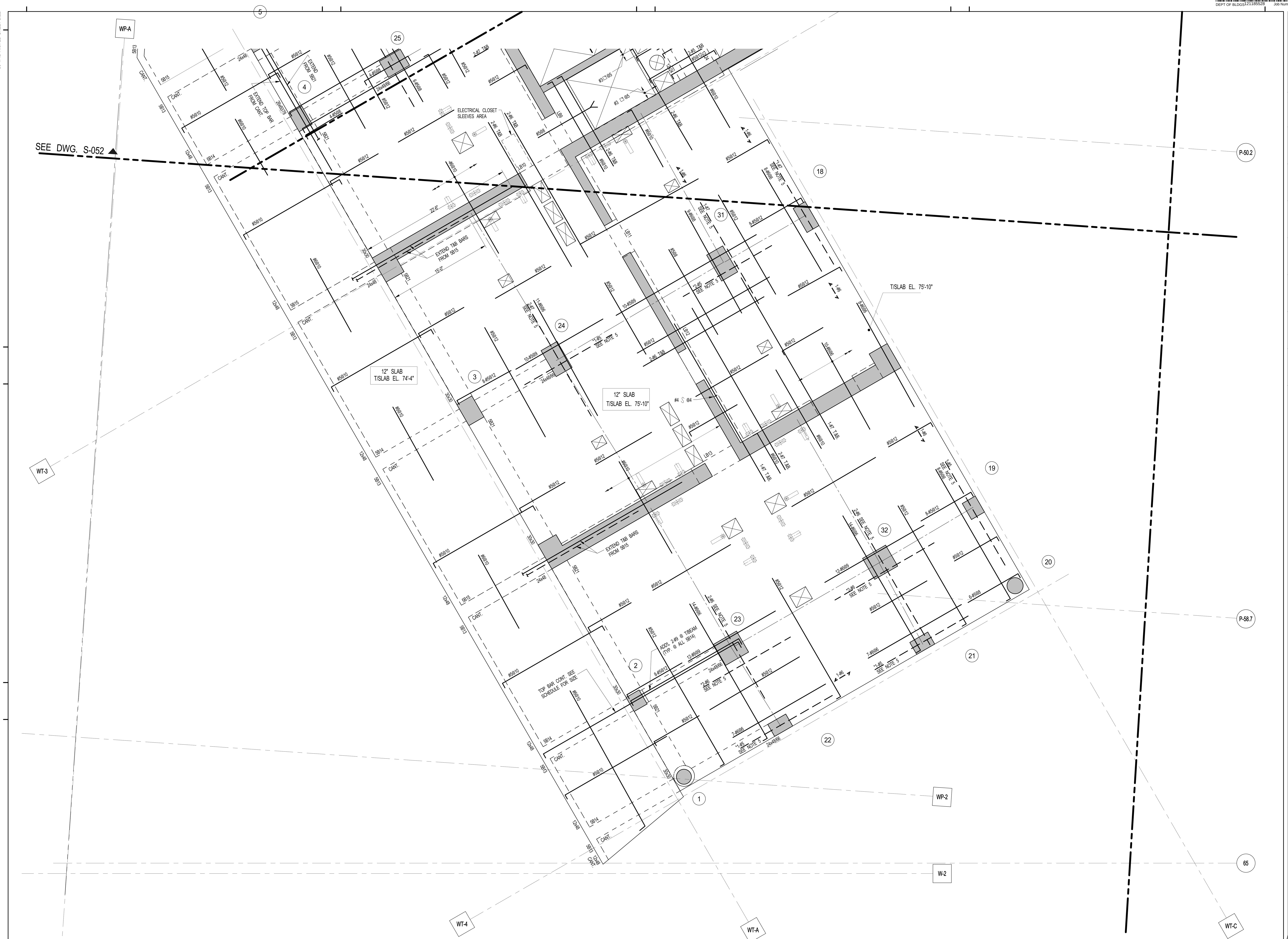

1 S-051 5TH FLOOR FRAMING PLAN - PART 1

SCALE: 3/16" = 1'-0"

NOTES:

1. FOR NOTES SEE THE CORRESPONDING OVERALL PLAN

KEY PLAN:

PROJECT NORTH / TRUE NORTH

DEVELOPER:
EXTELL DEVELOPMENT COMPANY
805 Third Ave, 7th Floor
New York, NY 10022
TEL: 212-712-6000 FAX: 212-712-6100

ARCHITECT OF RECORD:
AAI ARCHITECTS, P.C.
14 Wall Street, 2nd Floor
New York, NY 10005
TEL: 212-964-4040 FAX: 212-964-4090

INTERIOR DESIGNER:
MEYER DAVIS
180 Varick St, suite 404
New York, NY 10014
TEL: 212-627-5574

LANDSCAPE DESIGNER:
WEST 8 URBAN DESIGN & LANDSCAPE ARCHITECTURE P.C.
333 Hudson Street, Suite 905
New York, NY 10013
TEL: 212-285-0088 FAX: 212-285-0228

STRUCTURAL ENGINEERS:
WSP
228 East 45th Street
New York, NY 10017
TEL: 212-687-9888 FAX: 646-487-5501

MEP ENGINEERS:
ICOR ASSOCIATES, LLC
485 C Route 1 South, Suite 200
Iseline, NJ 08830
TEL: 908-272-3300 FAX: 908-272-4440

GEOTECHNICAL ENGINEERS:
LANGAN ENGINEERING & ENVIRONMENTAL SERVICES
21 Penn Plaza - 360 West 31st Street, 8th Floor
New York, NY 10001
TEL: 212.479.5400 FAX: 212.479.5444

No.	DESCRIPTION:	DATE:
1	DESIGN DEVELOPMENT	10-07-14
2	STEEL BID PACKAGE	02-24-15
3	CONCRETE BID PACKAGE	03-06-15
4	ISSUED FOR FILING	03-26-15

Discrepancies must be reported immediately to the Architect before proceeding. Only figured dimensions are to be used. Contractors must check all dimensions on site. This drawing is protected by copyright.

ALL DIMENSIONS ARE SHOWN IN IMPERIAL.

CONSULTANT: AAI ARCHITECTS, P.C.

PROJECT:
250 SOUTH STREET
NEW YORK, NY

DRAWING TITLE:
5TH FLOOR FRAMING PLAN - PART 1

SEAL & SIGNATURE:

DATE:	09/24/14
PROJECT No:	1302510
DRAWN:	CAD
CHK:	CL
SCALE:	
DWG No:	S-051.00
DOB PAGE No:	of

DOB EMPLOYEE STAMP:

Damian Titus
NYC Buildings
APPROVED
Under Directive 2 of 1975
Date: 05/21/2015
NYC Development Hub

DOB B-SCAN:

DEPT OF BLDGS 121185528 Job Number
ES077063420 Scan Code

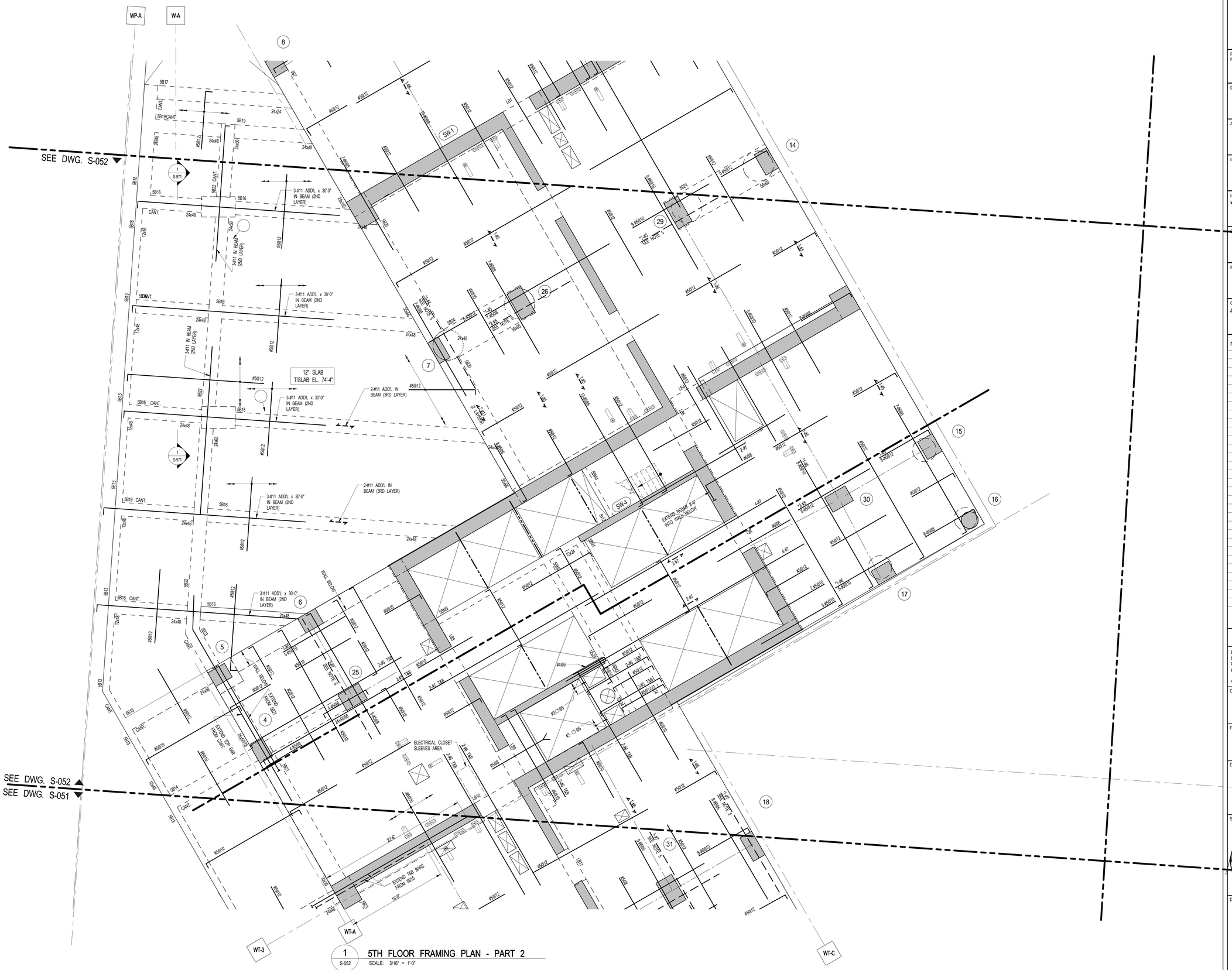

1 S-052 5TH FLOOR FRAMING PLAN - PART 2
SCALE: 3/16" = 1'-0"

KEY PLAN:

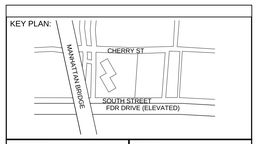

PROJECT NORTH | TRUE NORTH

DEVELOPER:
EXTELL DEVELOPMENT COMPANY
805 Third Ave, 7th Floor
New York, NY 10022
TEL: 212-712-6000 FAX: 212-712-6100

ARCHITECT OF RECORD:
AAI ARCHITECTS, P.C.
14 Wall Street, 2nd Floor
New York, NY 10005
TEL: 212-964-4040 FAX: 212-964-4090

INTERIOR DESIGNER:
MEYER DAVIS
180 Varick St, suite 404
New York, NY 10014
TEL: 212-627-5574

LANDSCAPE DESIGNER:
WEST 8 URBAN DESIGN & LANDSCAPE ARCHITECTURE P.C.
333 Hudson Street, Suite 905
New York, NY 10013
TEL: 212-285-0088 FAX: 212-285-0228

STRUCTURAL ENGINEERS:
WSP
228 East 45th Street
New York, NY 10017
TEL: 212-687-9888 FAX: 646-487-5501

MEP ENGINEERS:
ICOR ASSOCIATES, LLC
485 C Route 1 South, Suite 200
Iseline, NJ 08830
TEL: 908-272-3300 FAX: 908-272-4440

GEOTECHNICAL ENGINEERS:
LANGAN ENGINEERING & ENVIRONMENTAL SERVICES
21 Penn Plaza - 360 West 31st Street, 8th Floor
New York, NY 10001
TEL: 212.479.5400 FAX: 212.479.5444

No.	DESCRIPTION:	DATE:
1	DESIGN DEVELOPMENT	10-07-14
2	STEEL BID PACKAGE	02-24-15
3	CONCRETE BID PACKAGE	03-06-15
4	ISSUED FOR FILING	03-26-15

Discrepancies must be reported immediately to the Architect before proceeding. Only figured dimensions are to be used. Contractors must check all dimensions on site. This drawing is protected by copyright.

ALL DIMENSIONS ARE SHOWN IN IMPERIAL.

CONSULTANT:
AAI ARCHITECTS, P.C.

PROJECT:
250 SOUTH STREET
NEW YORK, NY

DRAWING TITLE:
5TH FLOOR FRAMING PLAN - PART 2
P-50.2

SEAL & SIGNATURE:
STATE OF NEW YORK
AHMAD RAHIMIAN
No. 085537
LICENSED PROFESSIONAL ENGINEER

DATE:	09/24/14
PROJECT No:	1302510
DRAWN: CAD	REV:
CHK: CL	
SCALE:	
DWG No:	S-052.00
DOB PAGE No:	of

DOB EMPLOYEE STAMP:
Damian Titus
Buildings
APPROVED
Under Directive 2 of 1975
Date: 05/21/2015:
NYC Development Hub

DOB B-SCAN:

30" x 42" Arch E1 - SHEET SIZE
FILE NAME:
PLOT DATE:

1 S-053 5TH FLOOR FRAMING PLAN - PART 3
SCALE: 3/16" = 1'-0"

KEY PLAN:

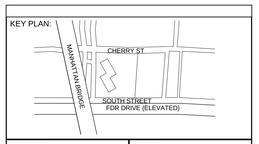

PROJECT NORTH

TRUE NORTH

DEVELOPER:
EXTELL DEVELOPMENT COMPANY
805 Third Ave, 7th Floor
New York, NY 10022
TEL: 212-712-6000 FAX: 212-712-6100

ARCHITECT OF RECORD:
AAI ARCHITECTS, P.C.
14 Wall Street, 2nd Floor
New York, NY 10005
TEL: 212-964-4040 FAX: 212-964-4090

INTERIOR DESIGNER:
MEYER DAVIS
180 Varick St, suite 404
New York, NY 10014
TEL: 212-627-5574

LANDSCAPE DESIGNER:
WEST 8 URBAN DESIGN & LANDSCAPE ARCHITECTURE P.C.
333 Hudson Street, Suite 905
New York, NY 10013
TEL: 212-285-0088 FAX: 212-285-0228

STRUCTURAL ENGINEERS:
WSP
228 East 45th Street
New York, NY 10017
TEL: 212-687-9888 FAX: 646-487-5501

MEP ENGINEERS:
ICOR ASSOCIATES, LLC
485 C Route 1 South, Suite 200
Iseline, NJ 08830
TEL: 908-272-3300 FAX: 908-272-4440

GEOTECHNICAL ENGINEERS:
LANGAN ENGINEERING & ENVIRONMENTAL SERVICES
21 Penn Plaza - 360 West 31st Street, 8th Floor
New York, NY 10001
TEL: 212.479.5400 FAX: 212.479.5444

No.	DESCRIPTION:	DATE:
1	DESIGN DEVELOPMENT	10-07-14
2	STEEL BID PACKAGE	02-24-15
3	CONCRETE BID PACKAGE	03-06-15
4	ISSUED FOR FILING	03-26-15

Discrepancies must be reported immediately to the Architect before proceeding. Only figured dimensions are to be used. Contractors must check all dimensions on site. This drawing is protected by copyright.

ALL DIMENSIONS ARE SHOWN IN IMPERIAL.

CONSULTANT:
AAI ARCHITECTS, P.C.

PROJECT:
250 SOUTH STREET
NEW YORK, NY

DRAWING TITLE:
5TH FLOOR FRAMING PLAN - PART 3

SEAL & SIGNATURE:
STATE OF NEW YORK
AHMAD RAHIMIAN
No. 085537
LICENSED PROFESSIONAL ENGINEER

DATE:	09/24/14
PROJECT No:	1302510
DRAWN: CAD	REV:
CHK: CL	
SCALE:	
DWG No:	S-053.00
DOB PAGE No:	of

DOB EMPLOYEE STAMP:
Damian Titus
NYC Buildings
APPROVED
Under Directive 2 of 1975
Date: 05/21/2015:
NYC Development Hub

DOB B-SCAN:

DEPT OF BLDGS121180539 Job Number
E-580070479Z Scan Code
30" x 42" Arch E1 - SHEET SIZE

1 S-060 TYPICAL LOW-LEVEL (6TH-22ND) FLOOR FRAMIMG PLAN

SCALE: 3/32" = 1'-0"

NOTES:

1. SLAB TO BE 9" THICK U.O.N. THUS ▭ ON PLAN.
3. BOTTOM REINFORCEMENT TO BE #4@12 CONT. E.W. FOR 9" SLAB, #4@10 CONT. E.W. FOR 10" U.O.N. ON PLAN. FOR ADDITIONAL REIFORCEMENT SEE PLAN
4. FOR BALANCE OF NOTES SEE DRAWING S-010.
5. FOR STR. INTEGRITY REINF. ADDL INFORMATION SEE S-965.

6TH-26TH FLOOR BEAM SCHEDULE

BEAM MARK	SIZE WIDTH	SIZE DEPTH	REINFORCEMENT BOTTOM CONTINUOUS	REINFORCEMENT TOP CONTINUOUS	STIRRUPS TYPE	STIRRUPS SIZE	STIRRUPS SPACING	REMARKS
6B1	12	24	2-#11	2-#11	1	#4	@6	
6B2	12	24	3-#11	2-#11	1	#4	@10	
6B3	12	24	2-#9	2-#9	1	#4	@10	
6B4	8	12	2-#6	2-#6	1	#3	@5	

TYPE 5

STIRRUP TYPES

KEY PLAN:

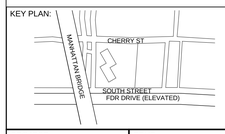

PROJECT NORTH

TRUE NORTH

DEVELOPER:
EXTELL DEVELOPMENT COMPANY
805 Third Ave, 7th Floor
New York, NY 10022
TEL: 212-712-6000 FAX: 212-712-6100

ARCHITECT OF RECORD:
AAI ARCHITECTS, P.C.
14 Wall Street, 2nd Floor
New York, NY 10005
TEL: 212-964-4040 FAX: 212-964-4090

INTERIOR DESIGNER:
MEYER DAVIS
180 Varick St, suite 404
New York, NY 10014
TEL: 212-627-5574

LANDSCAPE DESIGNER:
WEST 8 URBAN DESIGN & LANDSCAPE ARCHITECTURE P.C.
333 Hudson Street, Suite 905
New York, NY 10013
TEL: 212-285-0088 FAX: 212-285-0228

STRUCTURAL ENGINEERS:
WSP
228 East 45th Street
New York, NY 10017
TEL: 212-687-9888 FAX: 646-487-5501

MEP ENGINEERS:
ICOR ASSOCIATES, LLC
485 C Route 1 South, Suite 200
Iseline, NJ 08830
TEL: 908-272-3300 FAX: 908-272-4440

GEOTECHNICAL ENGINEERS:
LANGAN ENGINEERING & ENVIRONMENTAL SERVICES
21 Penn Plaza - 360 West 31st Street, 8th Floor
New York, NY 10001
TEL: 212.479.5400 FAX: 212.479.5444

No.	DESCRIPTION:	DATE:
1	50% SD	02-28-14
2	100%SD	04-25-14
3	50% DD	08-01-14
4	DESIGN DEVELOPMENT	10-07-14
5	CONCRETE BID PACKAGE	03-06-15
6	ISSUED FOR FILING	03-26-15

Discrepancies must be reported immediately to the Architect before proceeding. Only figured dimensions are to be used. Contractors must check all dimensions on site. This drawing is protected by copyright.

ALL DIMENSIONS ARE SHOWN IN IMPERIAL.

CONSULTANT:
AAI ARCHITECTS, P.C.

PROJECT:
250 SOUTH STREET
NEW YORK, NY

DRAWING TITLE:
6TH-22ND FLOOR OVERALL FRAMING PLAN

SEAL & SIGNATURE:

DATE:	02/24/14
PROJECT No:	1302510
DRAWN: CAD	REV:
CHK: CL	
SCALE:	
DWG No:	**S-060.00**
DOB PAGE No:	of

DOB EMPLOYEE STAMP:

DOB B-SCAN:

FILE NAME:
PLOT DATE:

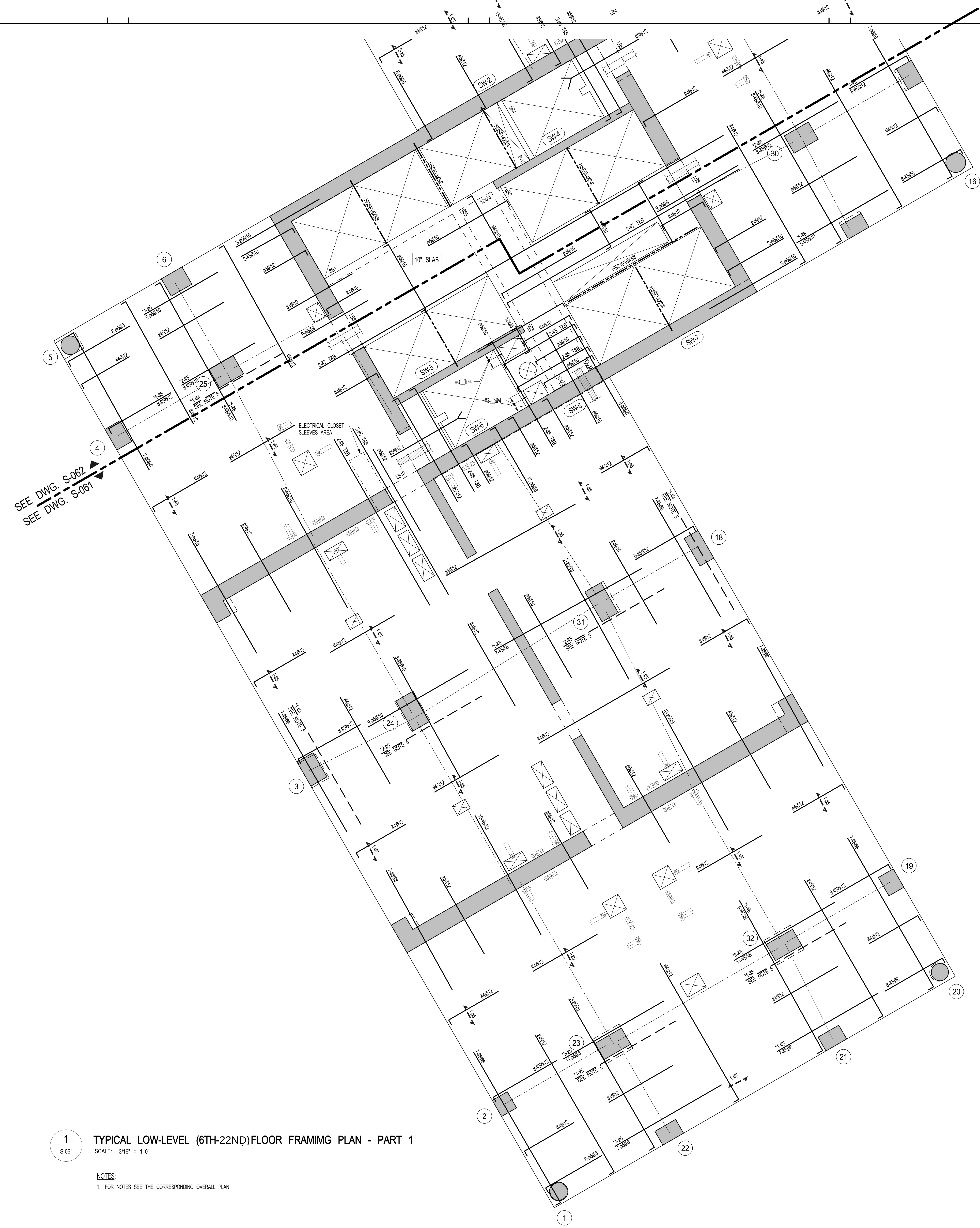

1 S-061 TYPICAL LOW-LEVEL (6TH-22ND) FLOOR FRAMIMG PLAN - PART 1

SCALE: 3/16" = 1'-0"

NOTES:

1. FOR NOTES SEE THE CORRESPONDING OVERALL PLAN

30" x 42" Arch E1 - SHEET SIZE

FILE NAME:
PLOT DATE:

DEPT OF BLDGS 121185528 Job Number

E5537397407 Scan Code

KEY PLAN:

CHERRY ST
MANHATTAN BRIDGE
SOUTH STREET
FDR DRIVE (ELEVATED)

PROJECT NORTH

TRUE NORTH

DEVELOPER:
EXTELL DEVELOPMENT COMPANY
805 Third Ave, 7th Floor
New York, NY 10022
TEL: 212-712-6000 FAX: 212-712-6100

ARCHITECT OF RECORD:
AAI ARCHITECTS, P.C.
14 Wall Street, 2nd Floor
New York, NY 10005
TEL: 212-964-4040 FAX: 212-964-4090

INTERIOR DESIGNER:
MEYER DAVIS
180 Varick St, suite 404
New York, NY 10014
TEL: 212-627-5574

LANDSCAPE DESIGNER:
WEST 8 URBAN DESIGN & LANDSCAPE ARCHITECTURE P.C.
333 Hudson Street, Suite 905
New York, NY 10013
TEL: 212-285-0088 FAX: 212-285-0228

STRUCTURAL ENGINEERS:
WSP
228 East 45th Street
New York, NY 10017
TEL: 212-687-9888 FAX: 646-487-5501

MEP ENGINEERS:
ICOR ASSOCIATES, LLC
485 C Route 1 South, Suite 200
Iseline, NJ 08830
TEL: 908-272-3300 FAX: 908-272-4440

GEOTECHNICAL ENGINEERS:
LANGAN ENGINEERING & ENVIRONMENTAL SERVICES
21 Penn Plaza - 360 West 31st Street, 8th Floor
New York, NY 10001
TEL: 212.479.5400 FAX: 212.479.5444

No.	DESCRIPTION:	DATE:
1	DESIGN DEVELOPMENT	10-07-14
2	CONCRETE BID PACKAGE	03-06-15
3	ISSUED FOR FILING	03-26-15

Discrepancies must be reported immediately to the Architect before proceeding. Only figured dimensions are to be used. Contractors must check all dimensions on site. This drawing is protected by copyright.

ALL DIMENSIONS ARE SHOWN IN IMPERIAL.

CONSULTANT:
AAI ARCHITECTS, P.C.

PROJECT:
250 SOUTH STREET
NEW YORK, NY

DRAWING TITLE:
6TH-22ND FLOOR FRAMIMG PLAN - PART 1

SEAL & SIGNATURE:
STATE OF NEW YORK
AHMAD RAHIMIAN
LICENSED PROFESSIONAL ENGINEER
No. 065537

DATE:	09/24/14
PROJECT No:	1302510
DRAWN: CAD	REV:
CHK: CL	
SCALE:	
DWG No:	**S-061.00**
DOB PAGE No:	of

DOB EMPLOYEE STAMP:

Damian Titus
NYC Buildings
APPROVED
Under Directive 2 of 1975
Date: 05/21/2015
NYC Development Hub

DOB B-SCAN:

DEPT OF BLDGS 121185528 Job Number
ES729228701 Scan Code

1 S-062 TYPICAL LOW-LEVEL (6TH-22ND)FLOOR FRAMIMG PLAN - PART 2

SCALE: 3/16" = 1'-0"

NOTES:

1. FOR NOTES SEE THE CORRESPONDING OVERALL PLAN

KEY PLAN:

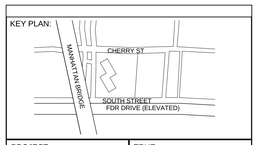

PROJECT NORTH

TRUE NORTH

DEVELOPER:
EXTELL DEVELOPMENT COMPANY
805 Third Ave, 7th Floor
New York, NY 10022
TEL: 212-712-6000 FAX: 212-712-6100

ARCHITECT OF RECORD:
AAI ARCHITECTS, P.C.
14 Wall Street, 2nd Floor
New York, NY 10005
TEL: 212-964-4040 FAX: 212-964-4090

INTERIOR DESIGNER:
MEYER DAVIS
180 Varick St, suite 404
New York, NY 10014
TEL: 212-627-5574

LANDSCAPE DESIGNER:
WEST 8 URBAN DESIGN & LANDSCAPE ARCHITECTURE P.C.
333 Hudson Street, Suite 905
New York, NY 10013
TEL: 212-285-0088 FAX: 212-285-0228

STRUCTURAL ENGINEERS:
WSP
228 East 45th Street
New York, NY 10017
TEL: 212-687-9888 FAX: 646-487-5501

MEP ENGINEERS:
ICOR ASSOCIATES, LLC
485 C Route 1 South, Suite 200
Iseline, NJ 08830
TEL: 908-272-3300 FAX: 908-272-4440

GEOTECHNICAL ENGINEERS:
LANGAN ENGINEERING & ENVIRONMENTAL SERVICES
21 Penn Plaza - 360 West 31st Street, 8th Floor
New York, NY 10001
TEL: 212.479.5400 FAX: 212.479.5444

No.	DESCRIPTION:	DATE:
1	DESIGN DEVELOPMENT	10-07-14
2	CONCRETE BID PACKAGE	03-06-15
3	ISSUED FOR FILING	03-26-15

Discrepancies must be reported immediately to the Architect before proceeding. Only figured dimensions are to be used. Contractors must check all dimensions on site. This drawing is protected by copyright.

ALL DIMENSIONS ARE SHOWN IN IMPERIAL.

CONSULTANT:
AAI ARCHITECTS, P.C.

PROJECT:
250 SOUTH STREET
NEW YORK, NY

DRAWING TITLE:
6TH-22ND FLOOR FRAMIMG PLAN - PART 2

SEAL & SIGNATURE:
STATE OF NEW YORK AHMAD RAHIMIAN LICENSED PROFESSIONAL ENGINEER No. 065537

DATE:	09/24/14
PROJECT No:	1302510
DRAWN: CAD	REV:
CHK: CL	
SCALE:	
DWG No:	S-062.00
DOB PAGE No:	of

DOB EMPLOYEE STAMP:
Damian Titus
Buildings
APPROVED
Under Directive 2 of 1975
Date: 05/21/2015:
NYC Development Hub

DOB B-SCAN:

30" x 42" Arch E1 - SHEET SIZE

FILE NAME:
PLOT DATE:

DEPT OF BLDGS121185539 Job Number
E1529243432 Scan Code
30" x 42" Arch E1 - SHEET SIZE

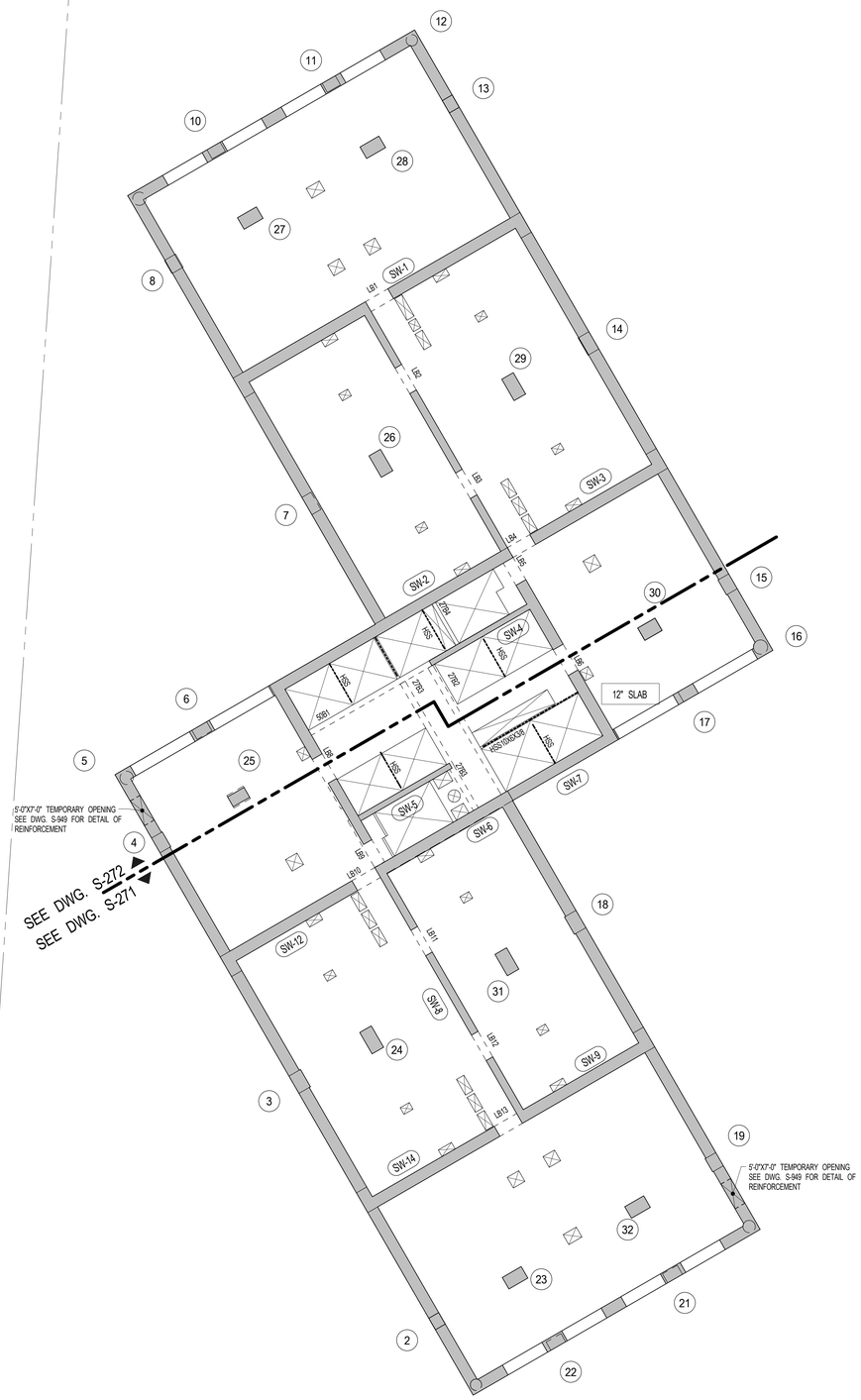

1 S-270 — 23RD FLOOR (MECAHANICAL) FRAMING PLAN

SCALE: 3/32" = 1'-0"

NOTES:

1. TOP OF SLAB ELEVATION TO BE U.O.N. ON PLAN
2. SLAB TO BE 12" THICK U.O.N. THUS ON PLAN.
3. TOP & BOTTOM REINFORCEMENT TO BE #5@12 CONT. E.W. FOR 12" SLAB U.O.N. ON PLAN. FOR ADDITIONAL REIFORCEMENT SEE PLAN
4. FOR BALANCE OF NOTES SEE DRAWING S-010.
5. FOR STR. INTEGRITY REINF. ADD'L INFORMATION SEE S-965.

27TH FLOOR BEAM SCHEDULE

BEAM MARK	SIZE		REINFORCEMENT		STIRRUPS			REMARKS
	WIDTH	DEPTH	BOTTOM CONTINUOUS	TOP CONTINUOUS	TYPE	SIZE	SPACING	
27B2	12	24	3-#11	2-#11	1	#4	@10	
27B3	12	24	2-#9	2-#9	1	#4	@10	
27B4	8	12	2-#6	2-#6	1	#3	@5	

TYPE 1

STIRRUP TYPES

KEY PLAN:

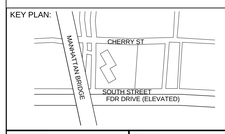

PROJECT NORTH

TRUE NORTH

DEVELOPER:
EXTELL DEVELOPMENT COMPANY
805 Third Ave, 7th Floor
New York, NY 10022
TEL: 212-712-6000 FAX: 212-712-6100

ARCHITECT OF RECORD:
AAI ARCHITECTS, P.C.
14 Wall Street, 2nd Floor
New York, NY 10005
TEL: 212-964-4040 FAX: 212-964-4090

INTERIOR DESIGNER:
MEYER DAVIS
180 Varick St, suite 404
New York, NY 10014
TEL: 212-627-5574

LANDSCAPE DESIGNER:
WEST 8 URBAN DESIGN & LANDSCAPE ARCHITECTURE P.C.
333 Hudson Street, Suite 905
New York, NY 10013
TEL: 212-285-0088 FAX: 212-285-0228

STRUCTURAL ENGINEERS:
WSP
228 East 45th Street
New York, NY 10017
TEL: 212-687-9888 FAX: 646-487-5501

MEP ENGINEERS:
ICOR ASSOCIATES, LLC
485 C Route 1 South, Suite 200
Iseline, NJ 08830
TEL: 908-272-3300 FAX: 908-272-4440

GEOTECHNICAL ENGINEERS:
LANGAN ENGINEERING & ENVIRONMENTAL SERVICES
21 Penn Plaza - 360 West 31st Street, 8th Floor
New York, NY 10001
TEL: 212.479.5400 FAX: 212.479.5444

No.	DESCRIPTION:	DATE:
1	50% SD	02-28-14
2	100%SD	04-25-14
3	50% DD	08-01-14
4	DESIGN DEVELOPMENT	10-07-14
5	CONCRETE BID PACKAGE	03-06-15
6	ISSUED FOR FILING	03-26-15

Discrepancies must be reported immediately to the Architect before proceeding. Only figured dimensions are to be used. Contractors must check all dimensions on site. This drawing is protected by copyright.

ALL DIMENSIONS ARE SHOWN IN IMPERIAL.

CONSULTANT: AAI ARCHITECTS, P.C.

PROJECT:
250 SOUTH STREET
NEW YORK, NY

DRAWING TITLE:
23RD FLOOR (MECHANICAL)
OVERALL FRAMING PLAN

SEAL & SIGNATURE:

DATE:	02/28/14
PROJECT No:	1302510
DRAWN: CAD	REV:
CHK: CL	
SCALE:	

DWG No:
S-270.00

DOB PAGE No: of

DOB EMPLOYEE STAMP:

DOB B-SCAN:

FILE NAME:
PLOT DATE:

DEPT OF BLDGS121185539 Job Number
E.S808439706 Scan Code

30" x 42" Arch E1 SHEET SIZE

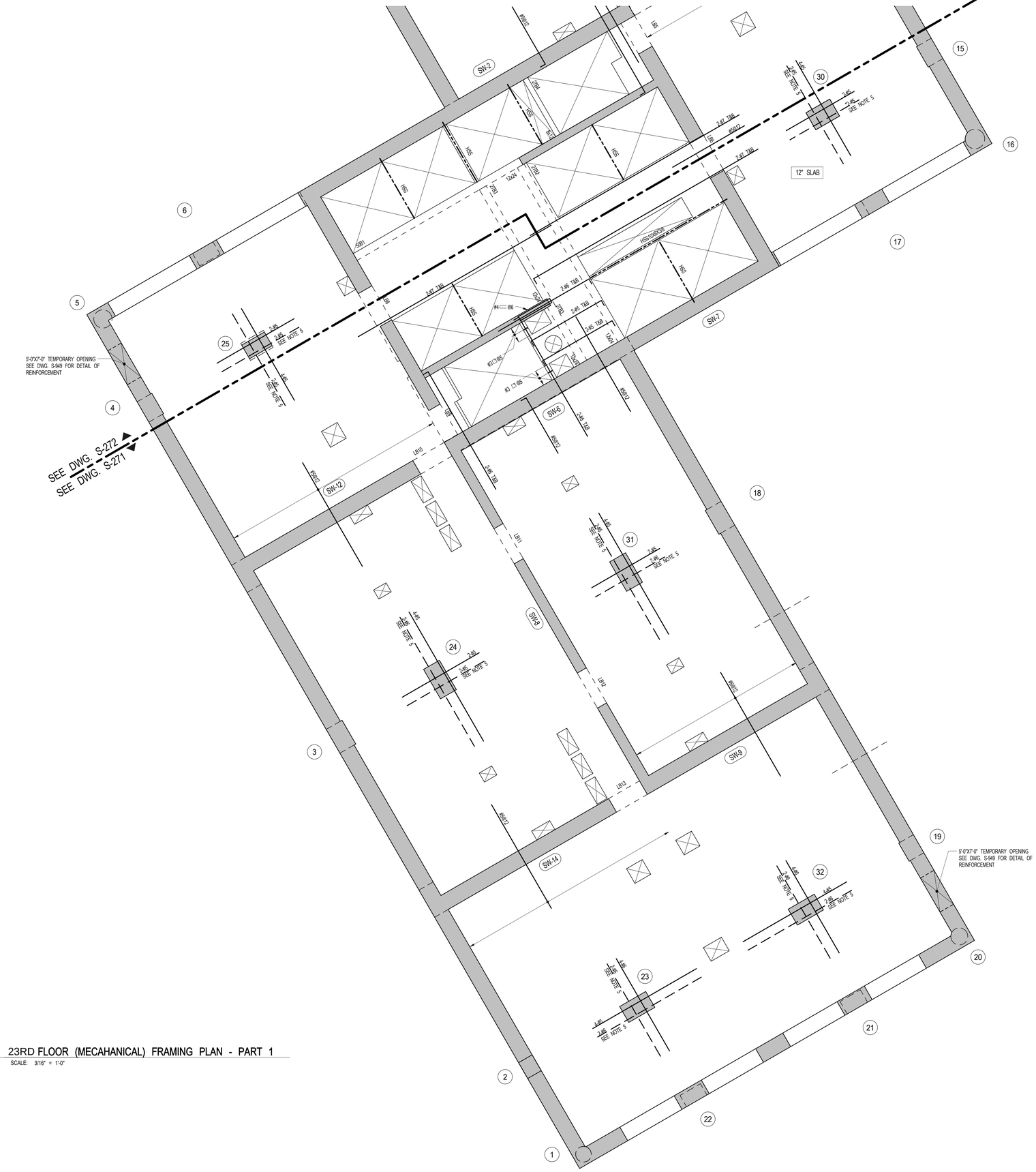

KEY PLAN:

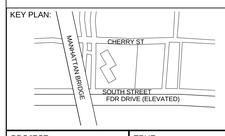

PROJECT NORTH

TRUE NORTH

DEVELOPER:
EXTELL DEVELOPMENT COMPANY
805 Third Ave, 7th Floor
New York, NY 10022
TEL: 212-712-6000 FAX: 212-712-6100

ARCHITECT OF RECORD:
AAI ARCHITECTS, P.C.
14 Wall Street, 2nd Floor
New York, NY 10005
TEL: 212-964-4040 FAX: 212-964-4090

INTERIOR DESIGNER:
MEYER DAVIS
180 Varick St, suite 404
New York, NY 10014
TEL: 212-627-5574

LANDSCAPE DESIGNER:
WEST 8 URBAN DESIGN & LANDSCAPE ARCHITECTURE P.C.
333 Hudson Street, Suite 905
New York, NY 10013
TEL: 212-285-0088 FAX: 212-285-0228

STRUCTURAL ENGINEERS:
WSP
228 East 45th Street
New York, NY 10017
TEL: 212-687-9888 FAX: 646-487-5501

MEP ENGINEERS:
ICOR ASSOCIATES, LLC
485 C Route 1 South, Suite 200
Iseline, NJ 08830
TEL: 908-272-3300 FAX: 908-272-4440

GEOTECHNICAL ENGINEERS:
LANGAN ENGINEERING & ENVIRONMENTAL SERVICES
21 Penn Plaza - 360 West 31st Street, 8th Floor
New York, NY 10001
TEL: 212.479.5400 FAX: 212.479.5444

No.	DESCRIPTION:	DATE:
1	DESIGN DEVELOPMENT	10-07-14
2	CONCRETE BID PACKAGE	03-06-15
3	ISSUED FOR FILING	03-26-15

Discrepancies must be reported immediately to the Architect before proceeding. Only figured dimensions are to be used. Contractors must check all dimensions on site. This drawing is protected by copyright.

ALL DIMENSIONS ARE SHOWN IN IMPERIAL.

CONSULTANT:
AAI ARCHITECTS, P.C.

PROJECT:
250 SOUTH STREET
NEW YORK, NY

DRAWING TITLE:
23RD FLOOR (MECAHANICAL)
FRAMING PLAN - PART 1

SEAL & SIGNATURE:

STATE OF NEW YORK
AHMAD RAMADAN
No. 085507
LICENSED PROFESSIONAL ENGINEER

DATE:	09/24/14
PROJECT No:	1302510
DRAWN: CAD	REV:
CHK: CL	
SCALE:	
DWG No:	**S-271.00**
DOB PAGE No:	of

DOB EMPLOYEE STAMP:

Damian Titus
Buildings
APPROVED
Under Directive 2 of 1975
Date: 05/21/2015
NYC Development Hub

DOB B-SCAN:

FILE NAME:
PLOT DATE:

DEPT OF BLDGS121185539 Job Number
ES7974071235 Scan Code

30" x 42" Arch E1 SHEET SIZE

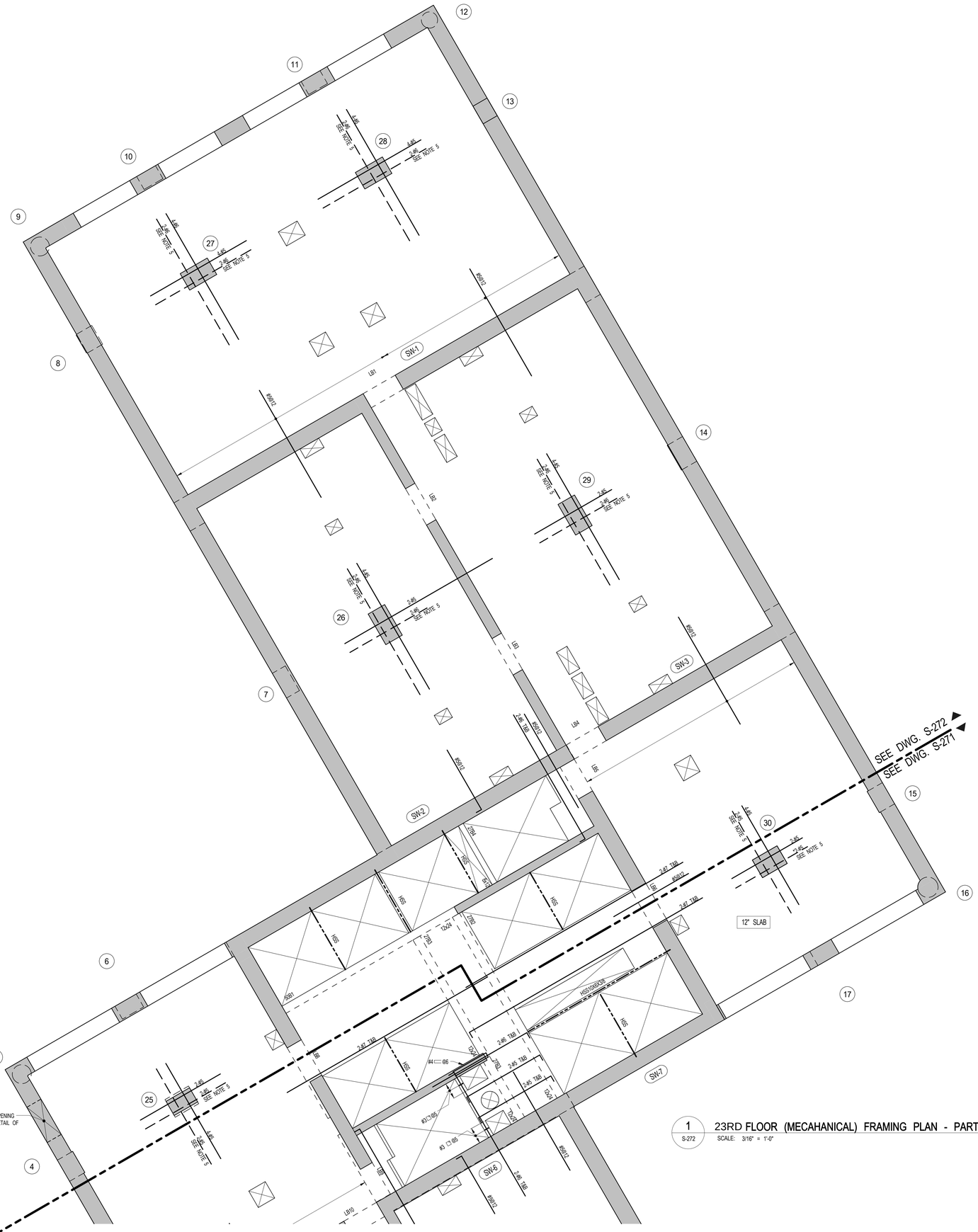

1 S-272 23RD FLOOR (MECAHANICAL) FRAMING PLAN - PART 2
SCALE: 3/16" = 1'-0"

KEY PLAN:

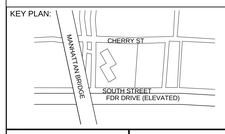

PROJECT NORTH

TRUE NORTH

DEVELOPER:
EXTELL DEVELOPMENT COMPANY
805 Third Ave, 7th Floor
New York, NY 10022
TEL: 212-712-6000 FAX: 212-712-6100

ARCHITECT OF RECORD:
AAI ARCHITECTS, P.C.
14 Wall Street, 2nd Floor
New York, NY 10005
TEL: 212-964-4040 FAX: 212-964-4090

INTERIOR DESIGNER:
MEYER DAVIS
180 Varick St, suite 404
New York, NY 10014
TEL: 212-627-5574

LANDSCAPE DESIGNER:
WEST 8 URBAN DESIGN & LANDSCAPE ARCHITECTURE P.C.
333 Hudson Street, Suite 905
New York, NY 10013
TEL: 212-285-0088 FAX: 212-285-0228

STRUCTURAL ENGINEERS:
WSP
228 East 45th Street
New York, NY 10017
TEL: 212-687-9888 FAX: 646-487-5501

MEP ENGINEERS:
ICOR ASSOCIATES, LLC
485 C Route 1 South, Suite 200
Iseline, NJ 08830
TEL: 908-272-3300 FAX: 908-272-4440

GEOTECHNICAL ENGINEERS:
LANGAN ENGINEERING & ENVIRONMENTAL SERVICES
21 Penn Plaza - 360 West 31st Street, 8th Floor
New York, NY 10001
TEL: 212.479.5400 FAX: 212.479.5444

No.	DESCRIPTION:	DATE:
1	DESIGN DEVELOPMENT	10-07-14
2	CONCRETE BID PACKAGE	03-06-15
3	ISSUED FOR FILING	03-26-15

Discrepancies must be reported immediately to the Architect before proceeding. Only figured dimensions are to be used. Contractors must check all dimensions on site. This drawing is protected by copyright.

ALL DIMENSIONS ARE SHOWN IN IMPERIAL.

CONSULTANT:
AAI ARCHITECTS, P.C.

PROJECT:
250 SOUTH STREET
NEW YORK, NY

DRAWING TITLE:
23RD FLOOR (MECAHANICAL) FRAMING PLAN - PART 2

SEAL & SIGNATURE:

DATE:	09/24/14
PROJECT No:	1302510
DRAWN: CAD	REV:
CHK: CL	
SCALE:	
DWG No:	**S-272.00**
DOB PAGE No:	of

DOB EMPLOYEE STAMP:

DOB B-SCAN:

FILE NAME:
PLOT DATE:

1 S-280 24TH FLOOR OVERALL FRAMING PLAN

SCALE: 3/32" = 1'-0"

NOTES:

1. TOP OF SLAB ELEVATION TO BE U.O.N. ON PLAN
2. SLAB TO BE 12" THICK U.O.N. THUS ON PLAN.
3. TOP & BOTTOM REINFORCEMENT TO BE #5@12 CONT. E.W. FOR 12" SLAB U.O.N. ON PLAN. FOR ADDITIONAL REIFORCEMENT SEE PLAN
4. FOR BALANCE OF NOTES SEE DRAWING S-010.
5. FOR STR. INTEGRITY REINF. ADD'L INFORMATION SEE S-965.

28TH FLOOR BEAM SCHEDULE

BEAM MARK	SIZE		REINFORCEMENT			STIRRUPS			REMARKS
	WIDTH	DEPTH	BOTTOM CONTINUOUS	TOP CONTINUOUS	TOP ADD'L BARS AT SUPPORT	TYPE	SIZE	SPACING	
28B1	12	24	2-#11	2-#11		1	#4	@6	
28B2	12	24	3-#11	2-#11		1	#4	@10	
28B3	12	24	2-#9	2-#9		1	#4	@10	
28B4	8	12	2-#6	2-#6		1	#3	@5	

TYPE 1

STIRRUP TYPES

KEY PLAN:

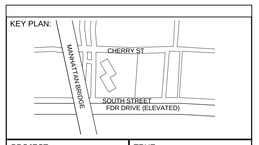

PROJECT NORTH

TRUE NORTH

DEVELOPER:
EXTELL DEVELOPMENT COMPANY
805 Third Ave, 7th Floor
New York, NY 10022
TEL: 212-712-6000 FAX: 212-712-6100

ARCHITECT OF RECORD:
AAI ARCHITECTS, P.C.
14 Wall Street, 2nd Floor
New York, NY 10005
TEL: 212-964-4040 FAX: 212-964-4090

INTERIOR DESIGNER:
MEYER DAVIS
180 Varick St, suite 404
New York, NY 10014
TEL: 212-627-5574

LANDSCAPE DESIGNER:
WEST 8 URBAN DESIGN & LANDSCAPE ARCHITECTURE P.C.
333 Hudson Street, Suite 905
New York, NY 10013
TEL: 212-285-0088 FAX: 212-285-0228

STRUCTURAL ENGINEERS:
WSP
228 East 45th Street
New York, NY 10017
TEL: 212-687-9888 FAX: 646-487-5501

MEP ENGINEERS:
ICOR ASSOCIATES, LLC
485 C Route 1 South, Suite 200
Iseline, NJ 08830
TEL: 908-272-3300 FAX: 908-272-4440

GEOTECHNICAL ENGINEERS:
LANGAN ENGINEERING & ENVIRONMENTAL SERVICES
21 Penn Plaza - 360 West 31st Street, 8th Floor
New York, NY 10001
TEL: 212.479.5400 FAX: 212.479.5444

No.	DESCRIPTION:	DATE:
1	50% SD	02-28-14
2	100%SD	04-25-14
3	50% DD	08-01-14
4	DESIGN DEVELOPMENT	10-07-14
5	CONCRETE BID PACKAGE	03-06-15
6	ISSUED FOR FILING	03-26-15

Discrepancies must be reported immediately to the Architect before proceeding. Only figured dimensions are to be used. Contractors must check all dimensions on site. This drawing is protected by copyright.

ALL DIMENSIONS ARE SHOWN IN IMPERIAL.

CONSULTANT:
AAI ARCHITECTS, P.C.

PROJECT:
250 SOUTH STREET
NEW YORK, NY

DRAWING TITLE:
24TH FLOOR OVERALL FRAMING PLAN

SEAL & SIGNATURE:
STATE OF NEW YORK · AHMAD RAHIMIAN · No. 085537 · LICENSED PROFESSIONAL ENGINEER

DATE:	02/28/14
PROJECT No:	1302510
DRAWN: CAD	REV:
CHK: CL	
SCALE:	
DWG No:	S-280.00
DOB PAGE No:	of

DOB EMPLOYEE STAMP:
Damian Titus
Buildings
APPROVED
Under Directive 2 of 1975
Date: 05/21/2015:
NYC Development Hub

DOB B-SCAN:

FILE NAME:
PLOT DATE:

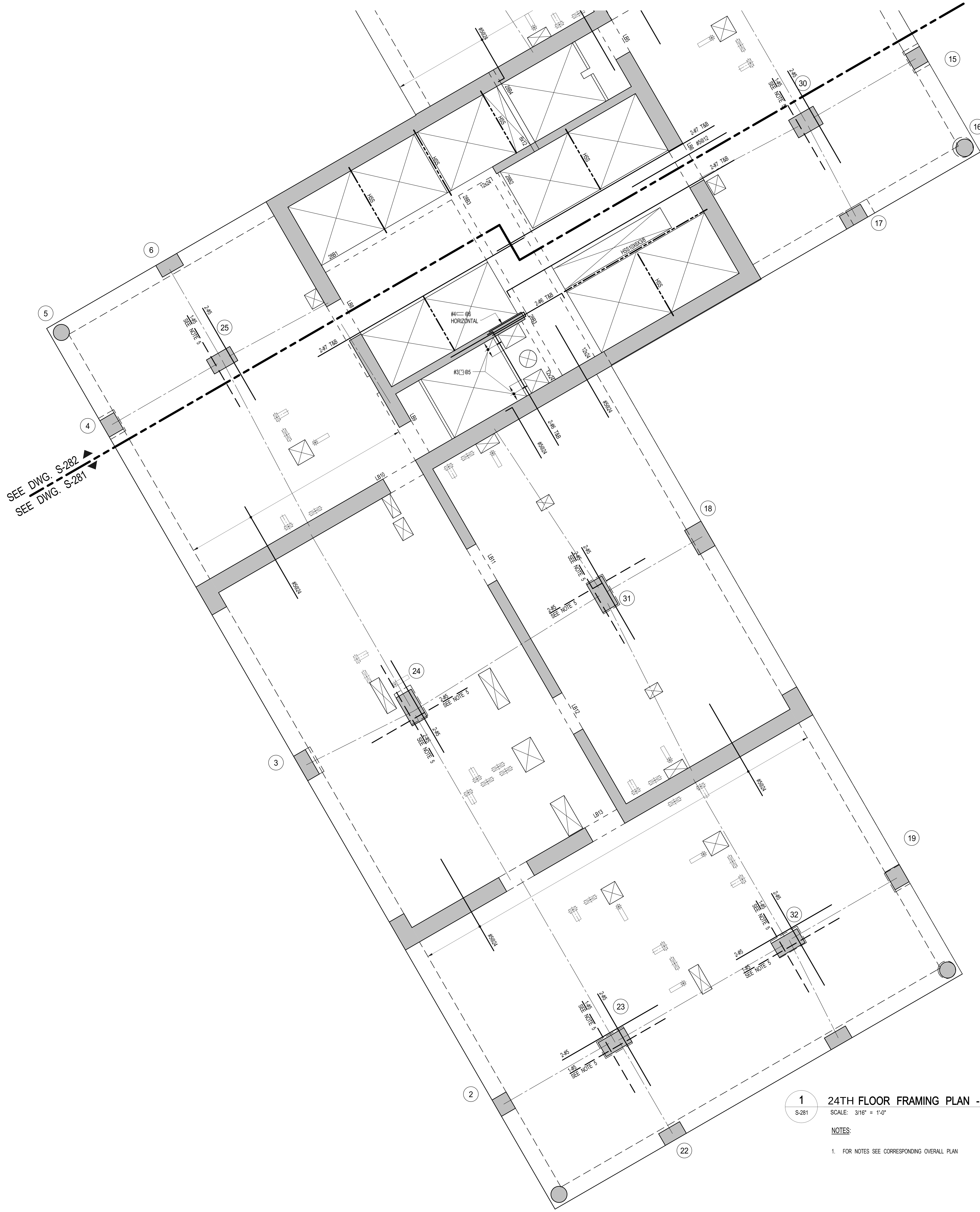

1 / S-281 **24TH FLOOR FRAMING PLAN - PART 1**

SCALE: 3/16" = 1'-0"

NOTES:

1. FOR NOTES SEE CORRESPONDING OVERALL PLAN

KEY PLAN:

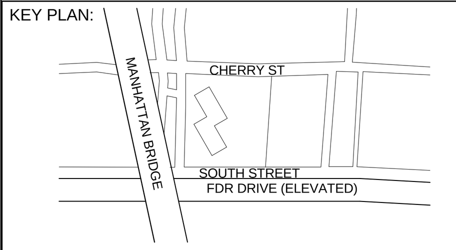

PROJECT NORTH | TRUE NORTH

DEVELOPER:
EXTELL DEVELOPMENT COMPANY
805 Third Ave, 7th Floor
New York, NY 10022
TEL: 212-712-6000 FAX: 212-712-6100

ARCHITECT OF RECORD:
AAI ARCHITECTS, P.C.
14 Wall Street, 2nd Floor
New York, NY 10005
TEL: 212-964-4040 FAX: 212-964-4090

INTERIOR DESIGNER:
MEYER DAVIS
180 Varick St, suite 404
New York, NY 10014
TEL: 212-627-5574

LANDSCAPE DESIGNER:
WEST 8 URBAN DESIGN & LANDSCAPE ARCHITECTURE P.C.
333 Hudson Street, Suite 905
New York, NY 10013
TEL: 212-285-0088 FAX: 212-285-0228

STRUCTURAL ENGINEERS:
WSP
228 East 45th Street
New York, NY 10017
TEL: 212-687-9888 FAX: 646-487-5501

MEP ENGINEERS:
ICOR ASSOCIATES, LLC
485 C Route 1 South, Suite 200
Iseline, NJ 08830
TEL: 908-272-3300 FAX: 908-272-4440

GEOTECHNICAL ENGINEERS:
LANGAN ENGINEERING & ENVIRONMENTAL SERVICES
21 Penn Plaza - 360 West 31st Street, 8th Floor
New York, NY 10001
TEL: 212.479.5400 FAX: 212.479.5444

No.	DESCRIPTION:	DATE:
1	50% DD	08-01-14
2	DESIGN DEVELOPMENT	10-07-14
3	CONCRETE BID PACKAGE	03-06-15
4	ISSUED FOR FILING	03-26-15

Discrepancies must be reported immediately to the Architect before proceeding. Only figured dimensions are to be used. Contractors must check all dimensions on site. This drawing is protected by copyright.

ALL DIMENSIONS ARE SHOWN IN IMPERIAL.

CONSULTANT:
AAI ARCHITECTS, P.C.

PROJECT:
250 SOUTH STREET
NEW YORK, NY

DRAWING TITLE:
24TH FRAMING PLAN - PART 1

SEAL & SIGNATURE:
STATE OF NEW YORK · AHMAD RAHIMIAN · No. 065537 · LICENSED PROFESSIONAL ENGINEER

DATE:	08/01/14
PROJECT No:	1302510
DRAWN:	CAD
CHK:	CL
SCALE:	
DWG No:	**S-281.00**
DOB PAGE No:	of

DOB EMPLOYEE STAMP: | DOB B-SCAN:

Damian Titus
NYC Buildings
APPROVED
Under Directive 2 of 1975
Date: 05/21/2015
NYC Development Hub

DEPT OF BLDGS 121185528 Job Number
ES625738739 Scan Code
30" x 42" Arch E1 - SHEET SIZE
FILE NAME:
PLOT DATE:

121185528 Job Number
ES978393137 Scan Code

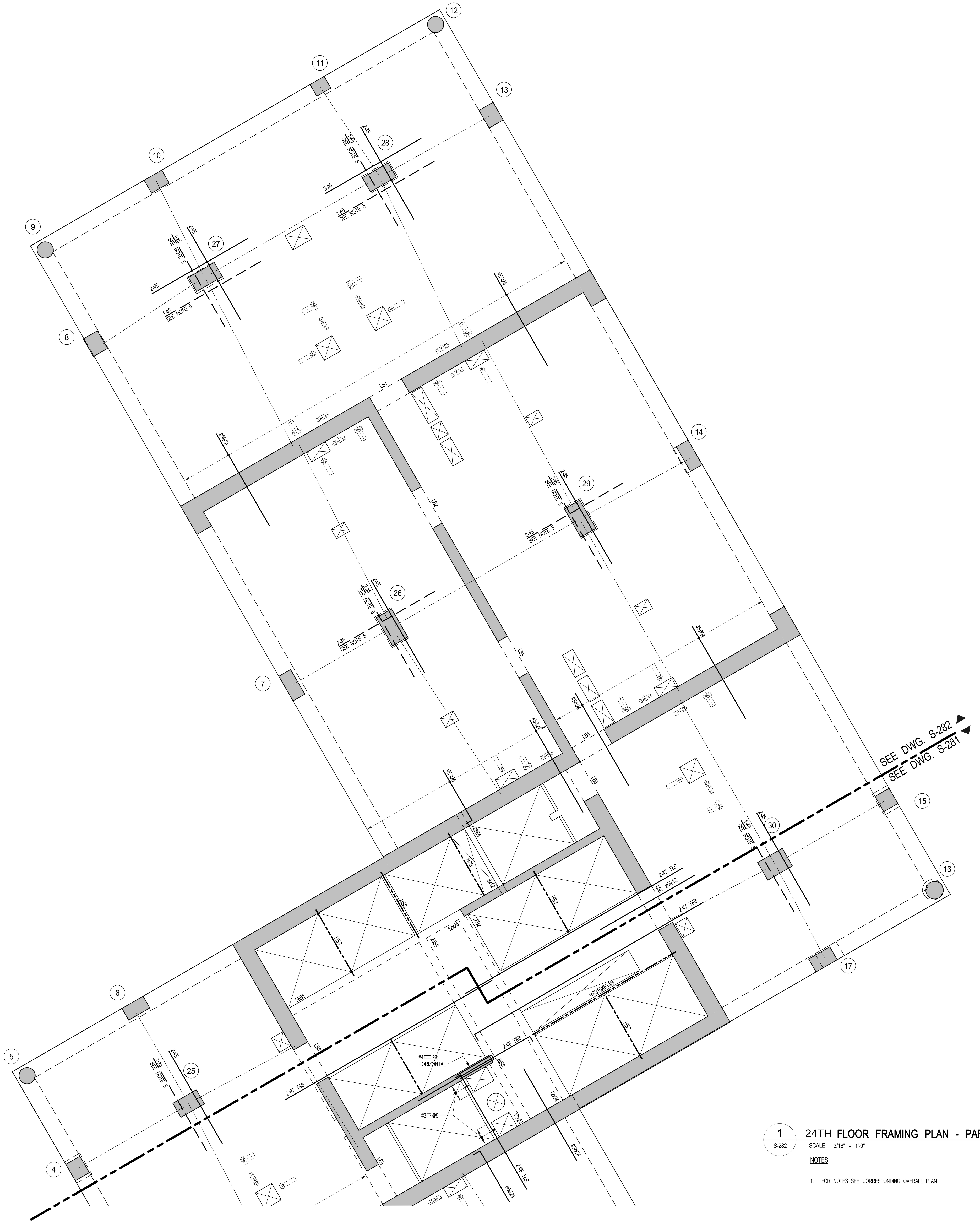

1 S-282 24TH FLOOR FRAMING PLAN - PART 2
SCALE: 3/16" = 1'-0"

NOTES:

1. FOR NOTES SEE CORRESPONDING OVERALL PLAN

KEY PLAN:

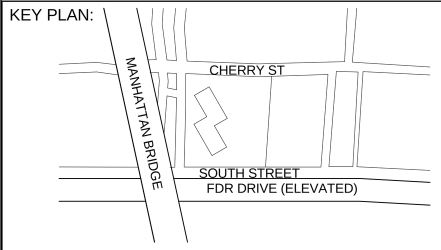

PROJECT NORTH

TRUE NORTH

DEVELOPER:
EXTELL DEVELOPMENT COMPANY
805 Third Ave, 7th Floor
New York, NY 10022
TEL: 212-712-6000 FAX: 212-712-6100

ARCHITECT OF RECORD:
AAI ARCHITECTS, P.C.
14 Wall Street, 2nd Floor
New York, NY 10005
TEL: 212-964-4040 FAX: 212-964-4090

INTERIOR DESIGNER:
MEYER DAVIS
180 Varick St, suite 404
New York, NY 10014
TEL: 212-627-5574

LANDSCAPE DESIGNER:
WEST 8 URBAN DESIGN & LANDSCAPE ARCHITECTURE P.C.
333 Hudson Street, Suite 905
New York, NY 10013
TEL: 212-285-0088 FAX: 212-285-0228

STRUCTURAL ENGINEERS:
WSP
228 East 45th Street
New York, NY 10017
TEL: 212-687-9888 FAX: 646-487-5501

MEP ENGINEERS:
ICOR ASSOCIATES, LLC
485 C Route 1 South, Suite 200
Iseline, NJ 08830
TEL: 908-272-3300 FAX: 908-272-4440

GEOTECHNICAL ENGINEERS:
LANGAN ENGINEERING & ENVIRONMENTAL SERVICES
21 Penn Plaza - 360 West 31st Street, 8th Floor
New York, NY 10001
TEL: 212.479.5400 FAX: 212.479.5444

No.	DESCRIPTION:	DATE:
1	50% DD	08-01-14
2	DESIGN DEVELOPMENT	10-07-14
3	CONCRETE BID PACKAGE	03-06-15
4	ISSUED FOR FILING	03-26-15

Discrepancies must be reported immediately to the Architect before proceeding. Only figured dimensions are to be used. Contractors must check all dimensions on site. This drawing is protected by copyright.

ALL DIMENSIONS ARE SHOWN IN IMPERIAL.

CONSULTANT:
AAI ARCHITECTS, P.C.

PROJECT:
250 SOUTH STREET
NEW YORK, NY

DRAWING TITLE:
24TH FRAMING PLAN - PART 2

SEAL & SIGNATURE:
STATE OF NEW YORK AHMAD RAHIMIAN No. 065537 LICENSED PROFESSIONAL ENGINEER

DATE:	08/01/14
PROJECT No:	1302510
DRAWN:	CAD
CHK:	CL
REV:	
SCALE:	
DWG No:	**S-282.00**
DOB PAGE No:	of

DOB EMPLOYEE STAMP:
Damian Titus
Buildings
APPROVED
Under Directive 2 of 1975
Date: 05/21/2015:
NYC Development Hub

DOB B-SCAN:

DEPT OF BLDGS121185528 Job Number
ES816191768 Scan Code

1 S-290 25TH-40TH TYPICAL FLOOR FRAMING PLAN

SCALE: 3/32" = 1'-0"

NOTES:

1. TOP OF SLAB ELEVATION TO BE ____ U.O.N. ON PLAN
2. SLAB TO BE 9" THICK U.O.N. THUS ▭ ON PLAN.
3. BOTTOM REINFORCEMENT TO BE: #4@12 FOR 9" SLAB
   #4@10 FOR 10" SLAB
4. FOR BALANCE OF NOTES SEE DRAWING S-010.
5. FOR STR. INTEGRITY REINF. ADD'L INFORMATION SEE S-965.

29TH-47TH FLOOR BEAM SCHEDULE

BEAM MARK	SIZE		REINFORCEMENT			STIRRUPS			REMARKS
	WIDTH	DEPTH	BOTTOM CONTINUOUS	TOP CONTINUOUS	TOP ADD'L BARS AT SUPPORT	TYPE	SIZE	SPACING	
29B1	12	24	3-#9	3-#9		1	#4	@6	
29B2	12	24	3-#9	3-#9		1	#4	@10	
29B3	12	24	2-#8	2-#8		1	#4	@10	
29B4	8	12	2-#6	2-#6		1	#3	@5	

KEY PLAN:

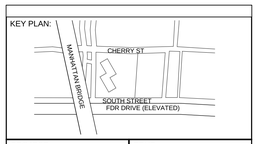

PROJECT NORTH

TRUE NORTH

DEVELOPER:
EXTELL DEVELOPMENT COMPANY
805 Third Ave, 7th Floor
New York, NY 10022
TEL: 212-712-6000 FAX: 212-712-6100

ARCHITECT OF RECORD:
AAI ARCHITECTS, P.C.
14 Wall Street, 2nd Floor
New York, NY 10005
TEL: 212-964-4040 FAX: 212-964-4090

INTERIOR DESIGNER:
MEYER DAVIS
180 Varick St, suite 404
New York, NY 10014
TEL: 212-627-5574

LANDSCAPE DESIGNER:
WEST 8 URBAN DESIGN & LANDSCAPE ARCHITECTURE P.C.
333 Hudson Street, Suite 905
New York, NY 10013
TEL: 212-285-0088 FAX: 212-285-0228

STRUCTURAL ENGINEERS:
WSP
228 East 45th Street
New York, NY 10017
TEL: 212-687-9888 FAX: 646-487-5501

MEP ENGINEERS:
ICOR ASSOCIATES, LLC
485 C Route 1 South, Suite 200
Iseline, NJ 08830
TEL: 908-272-3300 FAX: 908-272-4440

GEOTECHNICAL ENGINEERS:
LANGAN ENGINEERING & ENVIRONMENTAL SERVICES
21 Penn Plaza - 360 West 31st Street, 8th Floor
New York, NY 10001
TEL: 212.479.5400 FAX: 212.479.5444

No.	DESCRIPTION:	DATE:
1	CONCRETE BID PACKAGE	03-06-15
2	ISSUED FOR FILING	03-26-15

Discrepancies must be reported immediately to the Architect before proceeding. Only figured dimensions are to be used. Contractors must check all dimensions on site. This drawing is protected by copyright.

ALL DIMENSIONS ARE SHOWN IN IMPERIAL.

CONSULTANT:

AAI ARCHITECTS, P.C.

PROJECT:

250 SOUTH STREET
NEW YORK, NY

DRAWING TITLE:

25TH-40TH FLOOR OVERALL FRAMING PLAN

SEAL & SIGNATURE:

STATE OF NEW YORK
AHMAD RAHMAN
No. 085557
LICENSED PROFESSIONAL ENGINEER

DATE:	03/03/15
PROJECT No:	1302510
DRAWN: CAD	REV:
CHK: CL	
SCALE: As indicated	
DWG No:	S-290.00
DOB PAGE No:	of

DOB EMPLOYEE STAMP:

Damian Titus
NYC Buildings
APPROVED
Under Directive 2 of 1975
Date: 05/21/2015:
NYC Development Hub

DOB B-SCAN:

30" x 42" Arch E1 - SHEET SIZE

FILE NAME:
PLOT DATE:

DEPT OF BLDGS121185528 Job Number
ES571281668 Scan Code

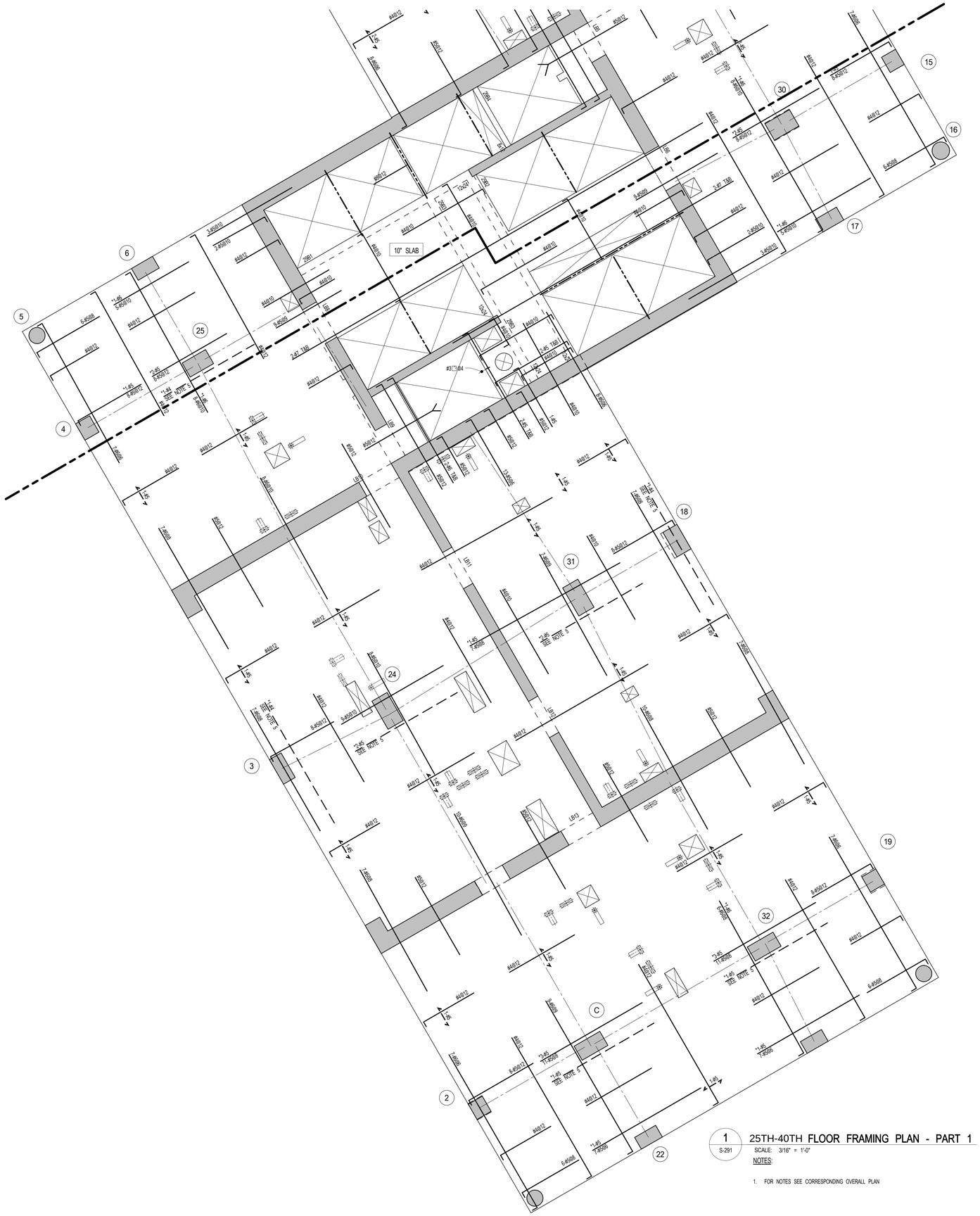

1 S-291 25TH-40TH FLOOR FRAMING PLAN - PART 1

SCALE: 3/16" = 1'-0"

NOTES:

1. FOR NOTES SEE CORRESPONDING OVERALL PLAN

KEY PLAN:

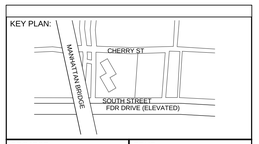

PROJECT NORTH

TRUE NORTH

DEVELOPER:
EXTELL DEVELOPMENT COMPANY
805 Third Ave, 7th Floor
New York, NY 10022
TEL: 212-712-6000 FAX: 212-712-6100

ARCHITECT OF RECORD:
AAI ARCHITECTS, P.C.
14 Wall Street, 2nd Floor
New York, NY 10005
TEL: 212-964-4040 FAX: 212-964-4090

INTERIOR DESIGNER:
MEYER DAVIS
180 Varick St, suite 404
New York, NY 10014
TEL: 212-627-5574

LANDSCAPE DESIGNER:
WEST 8 URBAN DESIGN & LANDSCAPE ARCHITECTURE P.C.
333 Hudson Street, Suite 905
New York, NY 10013
TEL: 212-285-0088 FAX: 212-285-0228

STRUCTURAL ENGINEERS:
WSP
228 East 45th Street
New York, NY 10017
TEL: 212-687-9888 FAX: 646-487-5501

MEP ENGINEERS:
ICOR ASSOCIATES, LLC
485 C Route 1 South, Suite 200
Iseline, NJ 08830
TEL: 908-272-3300 FAX: 908-272-4440

GEOTECHNICAL ENGINEERS:
LANGAN ENGINEERING & ENVIRONMENTAL SERVICES
21 Penn Plaza - 360 West 31st Street, 8th Floor
New York, NY 10001
TEL: 212.479.5400 FAX: 212.479.5444

No.	DESCRIPTION:	DATE:
1	CONCRETE BID PACKAGE	03-06-15
2	ISSUED FOR FILING	03-26-15

Discrepancies must be reported immediately to the Architect before proceeding. Only figured dimensions are to be used. Contractors must check all dimensions on site. This drawing is protected by copyright.

ALL DIMENSIONS ARE SHOWN IN IMPERIAL.

CONSULTANT:
AAI ARCHITECTS, P.C.

PROJECT:
250 SOUTH STREET
NEW YORK, NY

DRAWING TITLE:
25TH-40TH FRAMING PLAN - PART 1

SEAL & SIGNATURE:
STATE OF NEW YORK
AHMAD RAHIMIAN
No. 085537
LICENSED PROFESSIONAL ENGINEER

DATE:	03/03/15
PROJECT No:	1302510
DRAWN: CAD	REV:
CHK: CL	
SCALE: As indicated	
DWG No:	S-291.00
DOB PAGE No:	of

DOB EMPLOYEE STAMP:
Damian Titus
Buildings
APPROVED
Under Directive 2 of 1975
Date: 05/21/2015:
NYC Development Hub

DOB B-SCAN:

30" x 42" Arch E1 - SHEET SIZE

FILE NAME:
PLOT DATE:

DEPT OF BLDGS 121185528 Job Number
ES1680162248 Scan Code

1 S-292 25TH-40TH FLOOR FRAMING PLAN - PART 2

SCALE: 3/16" = 1'-0"

NOTES:

1. FOR NOTES SEE CORRESPONDING OVERALL PLAN

KEY PLAN:

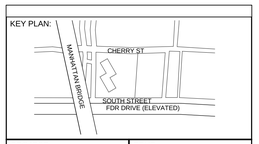

PROJECT NORTH

TRUE NORTH

DEVELOPER:
EXTELL DEVELOPMENT COMPANY
805 Third Ave, 7th Floor
New York, NY 10022
TEL: 212-712-6000 FAX: 212-712-6100

ARCHITECT OF RECORD:
AAI ARCHITECTS, P.C.
14 Wall Street, 2nd Floor
New York, NY 10005
TEL: 212-964-4040 FAX: 212-964-4090

INTERIOR DESIGNER:
MEYER DAVIS
180 Varick St, suite 404
New York, NY 10014
TEL: 212-627-5574

LANDSCAPE DESIGNER:
WEST 8 URBAN DESIGN & LANDSCAPE ARCHITECTURE P.C.
333 Hudson Street, Suite 905
New York, NY 10013
TEL: 212-285-0088 FAX: 212-285-0228

STRUCTURAL ENGINEERS:
WSP
228 East 45th Street
New York, NY 10017
TEL: 212-687-9888 FAX: 646-487-5501

MEP ENGINEERS:
ICOR ASSOCIATES, LLC
485 C Route 1 South, Suite 200
Iseline, NJ 08830
TEL: 908-272-3300 FAX: 908-272-4440

GEOTECHNICAL ENGINEERS:
LANGAN ENGINEERING & ENVIRONMENTAL SERVICES
21 Penn Plaza - 360 West 31st Street, 8th Floor
New York, NY 10001
TEL: 212.479.5400 FAX: 212.479.5444

No.	DESCRIPTION:	DATE:
1	CONCRETE BID PACKAGE	03-06-15
2	ISSUED FOR FILING	03-26-15

Discrepancies must be reported immediately to the Architect before proceeding. Only figured dimensions are to be used. Contractors must check all dimensions on site. This drawing is protected by copyright.

ALL DIMENSIONS ARE SHOWN IN IMPERIAL.

CONSULTANT:
AAI ARCHITECTS, P.C.

PROJECT:
250 SOUTH STREET
NEW YORK, NY

DRAWING TITLE:
25TH-40TH FRAMING PLAN - PART 2

SEAL & SIGNATURE:
STATE OF NEW YORK
AHMAD RAHIMIAN
No. 065537
LICENSED PROFESSIONAL ENGINEER

DATE:	03/03/15
PROJECT No:	1302510
DRAWN: CAD	REV:
CHK: CL	
SCALE: As indicated	
DWG No:	S-292.00
DOB PAGE No:	of

DOB EMPLOYEE STAMP:
Damian Titus
Buildings
APPROVED
Under Directive 2 of 1975
Date: 05/21/2015:
NYC Development Hub

DOB B-SCAN:

30" x 42" Arch E1 - SHEET SIZE

FILE NAME:
PLOT DATE:

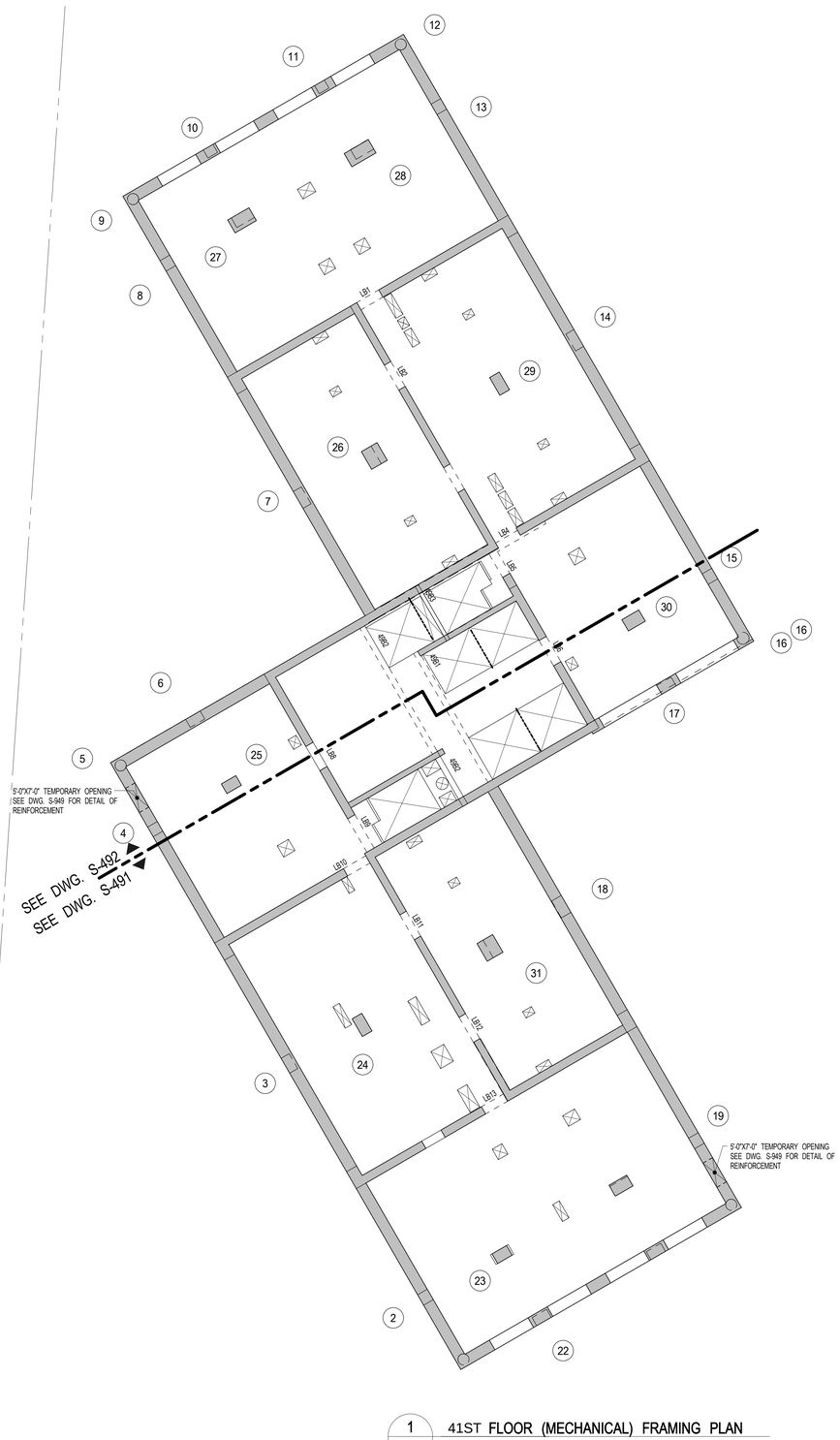

1 S-490 41ST FLOOR (MECHANICAL) FRAMING PLAN

SCALE: 3/32" = 1'-0"

NOTES:

1. TOP OF SLAB ELEVATION TO BE U.O.N. ON PLAN
2. SLAB TO BE 12" THICK U.O.N. THUS ON PLAN
3. TOP & BOTTOM REINFORCEMENT TO BE #5@12 CONT. E.W. FOR 12" SLAB U.O.N. ON PLAN. FOR ADDITIONAL REIFORCEMENT SEE PLAN
4. FOR BALANCE OF NOTES SEE DRAWING S-010.
5. FOR STR. INTEGRITY REINF. ADD'L INFORMATION SEE S-965.

49TH FLOOR BEAM SCHEDULE

BEAM MARK	SIZE		REINFORCEMENT		STIRRUPS			REMARKS
	WIDTH	DEPTH	BOTTOM CONTINUOUS	TOP CONTINUOUS	TYPE	SIZE	SPACING	
49B1	12	24	3-#11	2-#11	1	#4	@10	
49B2	12	24	3-#11	3-#11	1	#4	@6	
49B3	8	12	2-#6	2-#6	1	#3	@5	

TYPE 1

STIRRUP TYPES

KEY PLAN:

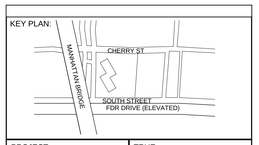

PROJECT NORTH

TRUE NORTH

DEVELOPER:
EXTELL DEVELOPMENT COMPANY
805 Third Ave, 7th Floor
New York, NY 10022
TEL: 212-712-6000 FAX: 212-712-6100

ARCHITECT OF RECORD:
AAI ARCHITECTS, P.C.
14 Wall Street, 2nd Floor
New York, NY 10005
TEL: 212-964-4040 FAX: 212-964-4090

INTERIOR DESIGNER:
MEYER DAVIS
180 Varick St, suite 404
New York, NY 10014
TEL: 212-627-5574

LANDSCAPE DESIGNER:
WEST 8 URBAN DESIGN & LANDSCAPE ARCHITECTURE P.C.
333 Hudson Street, Suite 905
New York, NY 10013
TEL: 212-285-0088 FAX: 212-285-0228

STRUCTURAL ENGINEERS:
WSP
228 East 45th Street
New York, NY 10017
TEL: 212-687-9888 FAX: 646-487-5501

MEP ENGINEERS:
ICOR ASSOCIATES, LLC
485 C Route 1 South, Suite 200
Iseline, NJ 08830
TEL: 908-272-3300 FAX: 908-272-4440

GEOTECHNICAL ENGINEERS:
LANGAN ENGINEERING & ENVIRONMENTAL SERVICES
21 Penn Plaza - 360 West 31st Street, 8th Floor
New York, NY 10001
TEL: 212.479.5400 FAX: 212.479.5444

No.	DESCRIPTION:	DATE:
1	50% SD	02-28-14
2	100%SD	04-25-14
3	50% DD	08-01-14
4	DESIGN DEVELOPMENT	10-07-14
5	CONCRETE BID PACKAGE	03-06-15
6	ISSUED FOR FILING	03-26-15

Discrepancies must be reported immediately to the Architect before proceeding. Only figured dimensions are to be used. Contractors must check all dimensions on site. This drawing is protected by copyright.

ALL DIMENSIONS ARE SHOWN IN IMPERIAL.

CONSULTANT:
AAI ARCHITECTS, P.C.

PROJECT:
250 SOUTH STREET
NEW YORK, NY

DRAWING TITLE:
41ST FLOOR (MECHANICAL)
OVERALL FRAMING PLAN

SEAL & SIGNATURE:

STATE OF NEW YORK · AHMAD RAHIMIAN · No. 065537 · LICENSED PROFESSIONAL ENGINEER

DATE:	02/28/14
PROJECT No:	1302510
DRAWN: CAD	REV:
CHK: CL	
SCALE:	
DWG No:	S-490.00
DOB PAGE No:	of

DOB EMPLOYEE STAMP:

Damian Titus
Buildings
APPROVED
Under Directive 2 of 1975
Date: 05/21/2015:
NYC Development Hub

DOB B-SCAN:

30" x 42" Arch E1 - SHEET SIZE

FILE NAME:
PLOT DATE:

DEPT OF BLDGS121185539 Job Number
E509450764? Scan Code

30" x 42" Arch E1 SHEET SIZE

1 S-491 41ST FLOOR (MECHANICAL) FRAMING PLAN - PART 1

SCALE: 3/16" = 1'-0"

NOTES:

1. FOR NOTES SEE CORRESPONDING OVERALL PLAN

KEY PLAN:

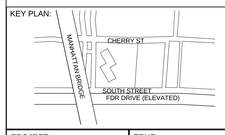

PROJECT NORTH

TRUE NORTH

DEVELOPER:
EXTELL DEVELOPMENT COMPANY
805 Third Ave, 7th Floor
New York, NY 10022
TEL: 212-712-6000 FAX: 212-712-6100

ARCHITECT OF RECORD:
AAI ARCHITECTS, P.C.
14 Wall Street, 2nd Floor
New York, NY 10005
TEL: 212-964-4040 FAX: 212-964-4090

INTERIOR DESIGNER:
MEYER DAVIS
180 Varick St, suite 404
New York, NY 10014
TEL: 212-627-5574

LANDSCAPE DESIGNER:
WEST 8 URBAN DESIGN & LANDSCAPE ARCHITECTURE P.C.
333 Hudson Street, Suite 905
New York, NY 10013
TEL: 212-285-0088 FAX: 212-285-0228

STRUCTURAL ENGINEERS:
WSP
228 East 45th Street
New York, NY 10017
TEL: 212-687-9888 FAX: 646-487-5501

MEP ENGINEERS:
ICOR ASSOCIATES, LLC
485 C Route 1 South, Suite 200
Iselin, NJ 08830
TEL: 908-272-3300 FAX: 908-272-4440

GEOTECHNICAL ENGINEERS:
LANGAN ENGINEERING & ENVIRONMENTAL SERVICES
21 Penn Plaza - 360 West 31st Street, 8th Floor
New York, NY 10001
TEL: 212.479.5400 FAX: 212.479.5444

No.	DESCRIPTION:	DATE:
1	DESIGN DEVELOPMENT	10-07-14
2	CONCRETE BID PACKAGE	03-06-15
3	ISSUED FOR FILING	03-26-15

Discrepancies must be reported immediately to the Architect before proceeding. Only figured dimensions are to be used. Contractors must check all dimensions on site. This drawing is protected by copyright.

ALL DIMENSIONS ARE SHOWN IN IMPERIAL.

CONSULTANT:
AAI ARCHITECTS, P.C.

PROJECT:
250 SOUTH STREET
NEW YORK, NY

DRAWING TITLE:
41ST FLOOR (MECHANICAL)
FRAMING PLAN - PART 1

SEAL & SIGNATURE:

DATE:	09/26/14
PROJECT No:	1302510
DRAWN: CAD	REV:
CHK: CL	
SCALE:	

DWG No:
S-491.00

DOB PAGE No: of

DOB EMPLOYEE STAMP:

DOB B-SCAN:

FILE NAME:
PLOT DATE:

DEPT OF BLDGS121185528 Job Number
E1-5769139513 Scan Code
30" x 42" Anth E1 - SHEET SIZE

1 S-492 41ST FLOOR (MECHANICAL) FRAMING PLAN - PART 2

SCALE: 3/16" = 1'-0"

NOTES:

1. FOR NOTES SEE CORRESPONDING OVERALL PLAN

KEY PLAN:

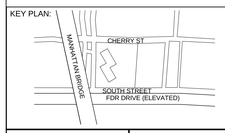

PROJECT NORTH

TRUE NORTH

DEVELOPER:
EXTELL DEVELOPMENT COMPANY
805 Third Ave, 7th Floor
New York, NY 10022
TEL: 212-712-6000 FAX: 212-712-6100

ARCHITECT OF RECORD:
AAI ARCHITECTS, P.C.
14 Wall Street, 2nd Floor
New York, NY 10005
TEL: 212-964-4040 FAX: 212-964-4090

INTERIOR DESIGNER:
MEYER DAVIS
180 Varick St, suite 404
New York, NY 10014
TEL: 212-627-5574

LANDSCAPE DESIGNER:
WEST 8 URBAN DESIGN & LANDSCAPE ARCHITECTURE P.C.
333 Hudson Street, Suite 905
New York, NY 10013
TEL: 212-285-0088 FAX: 212-285-0228

STRUCTURAL ENGINEERS:
WSP
228 East 45th Street
New York, NY 10017
TEL: 212-687-9888 FAX: 646-487-5501

MEP ENGINEERS:
ICOR ASSOCIATES, LLC
485 C Route 1 South, Suite 200
Iseline, NJ 08830
TEL: 908-272-3300 FAX: 908-272-4440

GEOTECHNICAL ENGINEERS:
LANGAN ENGINEERING & ENVIRONMENTAL SERVICES
21 Penn Plaza - 360 West 31st Street, 8th Floor
New York, NY 10001
TEL: 212.479.5400 FAX: 212.479.5444

No.	DESCRIPTION:	DATE:
1	DESIGN DEVELOPMENT	10-07-14
2	CONCRETE BID PACKAGE	03-06-15
3	ISSUED FOR FILING	03-26-15

Discrepancies must be reported immediately to the Architect before proceeding. Only figured dimensions are to be used. Contractors must check all dimensions on site. This drawing is protected by copyright.

ALL DIMENSIONS ARE SHOWN IN IMPERIAL.

CONSULTANT:
AAI ARCHITECTS, P.C.

PROJECT:
250 SOUTH STREET
NEW YORK, NY

DRAWING TITLE:
41ST FLOOR (MECHANICAL)
FRAMING PLAN - PART 2

SEAL & SIGNATURE:

DATE:	09/26/14
PROJECT No:	1302510
DRAWN: CAD	REV:
CHK: CL	
SCALE:	
DWG No:	**S-492.00**
DOB PAGE No:	of

DOB EMPLOYEE STAMP:

Damian Titus
DOB Buildings
APPROVED
Under Directive 2 of 1975
Date: 05/21/2015
NYC Development Hub

DOB B-SCAN:

FILE NAME:
PLOT DATE:

1 S-500 42ND FLOOR OVERALL FRAMING PLAN

SCALE: 3/32" = 1'-0"

NOTES:

1. TOP OF SLAB ELEVATION TO BE U.O.N. ON PLAN
2. SLAB TO BE 12" THICK U.O.N. THUS ON PLAN.
3. TOP & BOTTOM REINFORCEMENT TO BE #5@12 CONT. E.W. FOR 12" SLAB U.O.N. ON PLAN. FOR ADDITIONAL REIFORCEMENT SEE PLAN
4. FOR BALANCE OF NOTES SEE DRAWING S-010.
5. FOR STR. INTEGRITY REINF. ADD'L INFORMATION SEE S-965.

50TH FLOOR BEAM SCHEDULE

BEAM MARK	SIZE		REINFORCEMENT		STIRRUPS			REMARKS
	WIDTH	DEPTH	BOTTOM CONTINUOUS	TOP CONTINUOUS	TYPE	SIZE	SPACING	
50B1	12	24	3-#11	2-#11	1	#4	@10	
50B2	12	24	3-#11	3-#11	1	#4	@6	
50B3	8	12	2-#6	2-#6	1	#3	@5	

KEY PLAN:

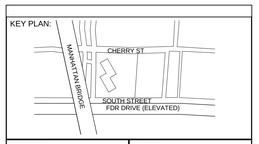

PROJECT NORTH

TRUE NORTH

DEVELOPER:
EXTELL DEVELOPMENT COMPANY
805 Third Ave, 7th Floor
New York, NY 10022
TEL: 212-712-6000 FAX: 212-712-6100

ARCHITECT OF RECORD:
AAI ARCHITECTS, P.C.
14 Wall Street, 2nd Floor
New York, NY 10005
TEL: 212-964-4040 FAX: 212-964-4090

INTERIOR DESIGNER:
MEYER DAVIS
180 Varick St, suite 404
New York, NY 10014
TEL: 212-627-5574

LANDSCAPE DESIGNER:
WEST 8 URBAN DESIGN & LANDSCAPE ARCHITECTURE P.C.
333 Hudson Street, Suite 905
New York, NY 10013
TEL: 212-285-0088 FAX: 212-285-0228

STRUCTURAL ENGINEERS:
WSP
228 East 45th Street
New York, NY 10017
TEL: 212-687-9888 FAX: 646-487-5501

MEP ENGINEERS:
ICOR ASSOCIATES, LLC
485 C Route 1 South, Suite 200
Iseline, NJ 08830
TEL: 908-272-3300 FAX: 908-272-4440

GEOTECHNICAL ENGINEERS:
LANGAN ENGINEERING & ENVIRONMENTAL SERVICES
21 Penn Plaza - 360 West 31st Street, 8th Floor
New York, NY 10001
TEL: 212.479.5400 FAX: 212.479.5444

No.	DESCRIPTION:	DATE:
1	50% SD	02-28-14
2	100%SD	04-25-14
3	50% DD	08-01-14
4	DESIGN DEVELOPMENT	10-07-14
5	CONCRETE BID PACKAGE	03-06-15
6	ISSUED FOR FILING	03-26-15

Discrepancies must be reported immediately to the Architect before proceeding. Only figured dimensions are to be used. Contractors must check all dimensions on site. This drawing is protected by copyright.

ALL DIMENSIONS ARE SHOWN IN IMPERIAL.

CONSULTANT:
AAI ARCHITECTS, P.C.

PROJECT:
250 SOUTH STREET
NEW YORK, NY

DRAWING TITLE:
42ND FLOOR OVERALL FRAMING PLAN

SEAL & SIGNATURE:

STATE OF NEW YORK · AHMAD RAHIMIAN · No. 085537 · LICENSED PROFESSIONAL ENGINEER

DATE:	02/28/14
PROJECT No:	1302510
DRAWN: CAD	REV:
CHK: CL	
SCALE:	
DWG No:	S-500.00
DOB PAGE No:	of

DOB EMPLOYEE STAMP:

Damian Titus
NYC Buildings
APPROVED
Under Directive 2 of 1975
Date: 05/21/2015:
NYC Development Hub

DOB B-SCAN:

30" x 42" Arch E1 - SHEET SIZE

FILE NAME:
PLOT DATE:

DEPT OF BLDGS121185539 Job Number
E1508060107 Scan Code
30" x 42" Arch E1 - SHEET SIZE

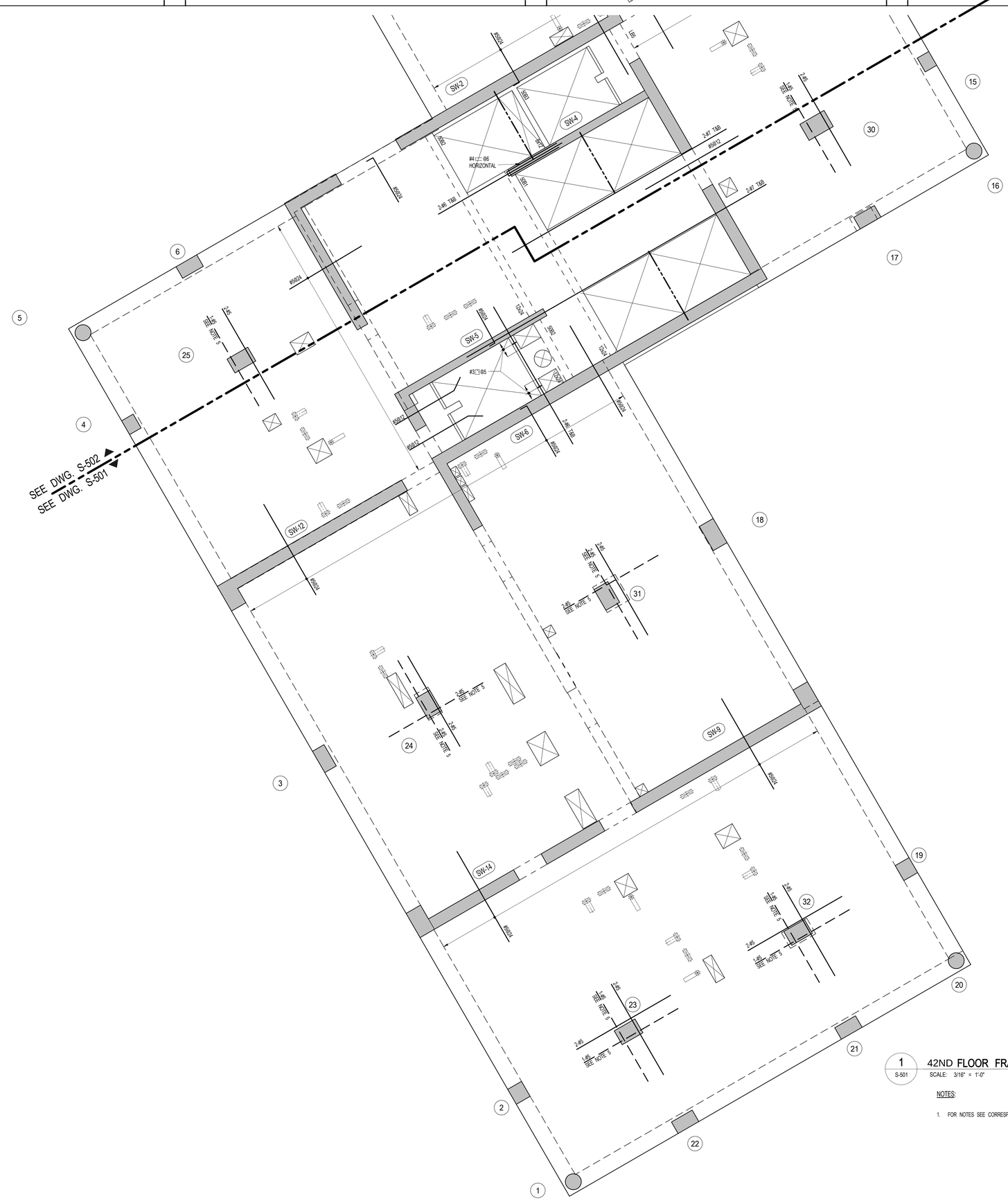

1 S-501 — 42ND FLOOR FRAMING PLAN - PART 1
SCALE: 3/16" = 1'-0"

NOTES:

1. FOR NOTES SEE CORRESPONDING OVERALL PLAN

KEY PLAN:

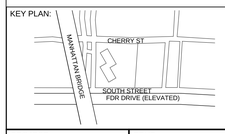

PROJECT NORTH

TRUE NORTH

DEVELOPER:
EXTELL DEVELOPMENT COMPANY
805 Third Ave, 7th Floor
New York, NY 10022
TEL: 212-712-6000 FAX: 212-712-6100

ARCHITECT OF RECORD:
AAI ARCHITECTS, P.C.
14 Wall Street, 2nd Floor
New York, NY 10005
TEL: 212-964-4040 FAX: 212-964-4090

INTERIOR DESIGNER:
MEYER DAVIS
180 Varick St, suite 404
New York, NY 10014
TEL: 212-627-5574

LANDSCAPE DESIGNER:
WEST 8 URBAN DESIGN & LANDSCAPE ARCHITECTURE P.C.
333 Hudson Street, Suite 905
New York, NY 10013
TEL: 212-285-0088 FAX: 212-285-0228

STRUCTURAL ENGINEERS:
WSP
228 East 45th Street
New York, NY 10017
TEL: 212-687-9888 FAX: 646-487-5501

MEP ENGINEERS:
ICOR ASSOCIATES, LLC
485 C Route 1 South, Suite 200
Iseline, NJ 08830
TEL: 908-272-3300 FAX: 908-272-4440

GEOTECHNICAL ENGINEERS:
LANGAN ENGINEERING & ENVIRONMENTAL SERVICES
21 Penn Plaza - 360 West 31st Street, 8th Floor
New York, NY 10001
TEL: 212.479.5400 FAX: 212.479.5444

No.	DESCRIPTION:	DATE:
1	DESIGN DEVELOPMENT	10-07-14
2	CONCRETE BID PACKAGE	03-06-15
3	ISSUED FOR FILING	03-26-15

Discrepancies must be reported immediately to the Architect before proceeding. Only figured dimensions are to be used. Contractors must check all dimensions on site. This drawing is protected by copyright.

ALL DIMENSIONS ARE SHOWN IN IMPERIAL.

CONSULTANT:
AAI ARCHITECTS, P.C.

PROJECT:
250 SOUTH STREET
NEW YORK, NY

DRAWING TITLE:
42ND FLOOR FRAMING PLAN - PART 1

SEAL & SIGNATURE:
STATE OF NEW YORK — ARMAD RAMEZANI — No. 085553 — LICENSED PROFESSIONAL ENGINEER

DATE:	09/26/14
PROJECT No:	1302510
DRAWN: CAD	REV:
CHK: CL	
SCALE:	
DWG No:	**S-501.00**
DOB PAGE No:	of

DOB EMPLOYEE STAMP:
Damian Titus
NYC Buildings
APPROVED
Under Directive 2 of 1975
Date: 05/21/2015:
NYC Development Hub

DOB B-SCAN:

FILE NAME:
PLOT DATE:

DEPT OF BLDGS121185539 Job Number
E-366913507323 Scan Code

30" x 42" Arch E1 - SHEET SIZE

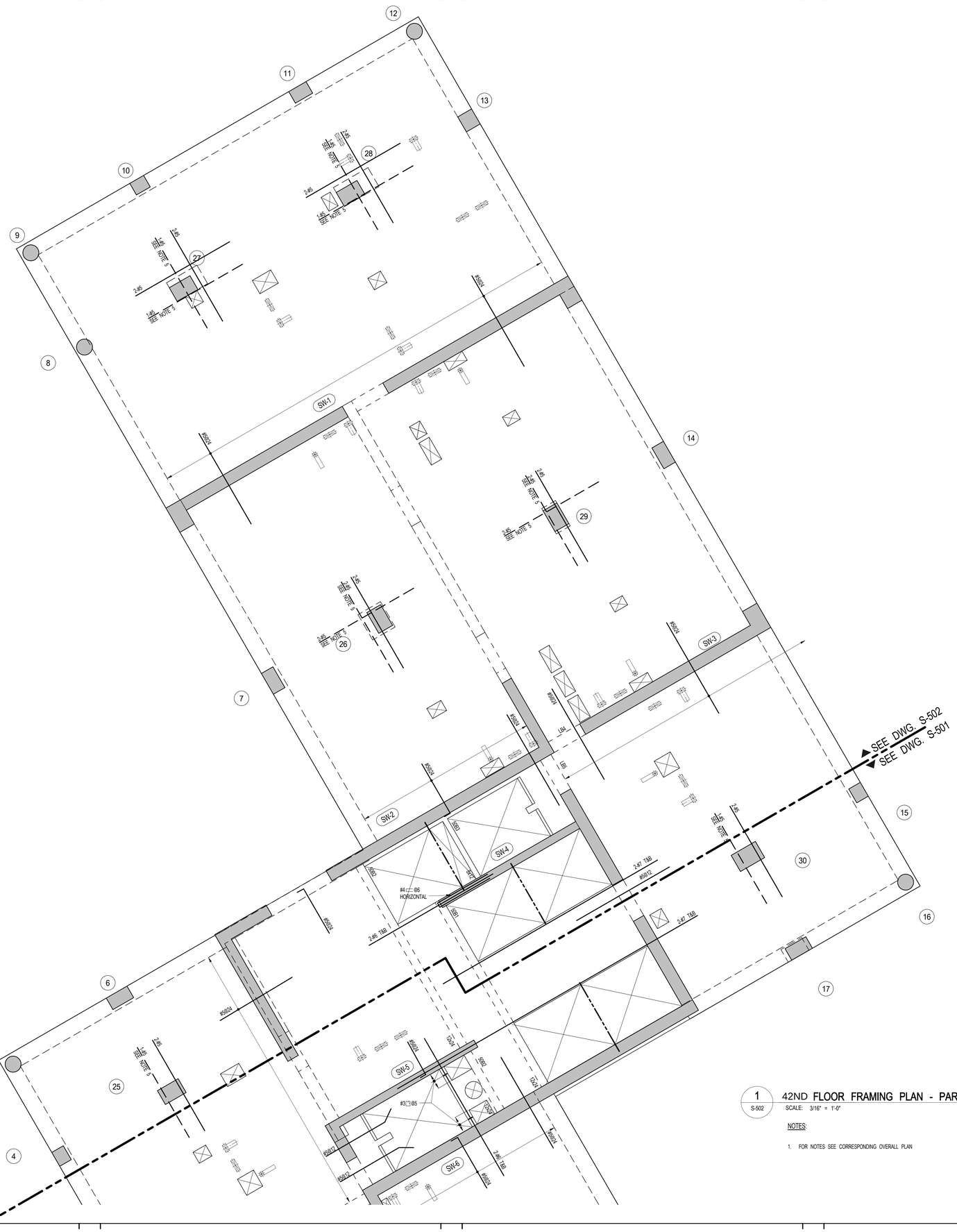

1 S-502 42ND FLOOR FRAMING PLAN - PART 2

SCALE: 3/16" = 1'-0"

NOTES:

1. FOR NOTES SEE CORRESPONDING OVERALL PLAN

KEY PLAN:

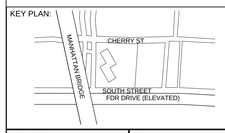

PROJECT NORTH

TRUE NORTH

DEVELOPER:
EXTELL DEVELOPMENT COMPANY
805 Third Ave, 7th Floor
New York, NY 10022
TEL: 212-712-6000 FAX: 212-712-6100

ARCHITECT OF RECORD:
AAI ARCHITECTS, P.C.
14 Wall Street, 2nd Floor
New York, NY 10005
TEL: 212-964-4040 FAX: 212-964-4090

INTERIOR DESIGNER:
MEYER DAVIS
180 Varick St, suite 404
New York, NY 10014
TEL: 212-627-5574

LANDSCAPE DESIGNER:
WEST 8 URBAN DESIGN & LANDSCAPE ARCHITECTURE P.C.
333 Hudson Street, Suite 905
New York, NY 10013
TEL: 212-285-0088 FAX: 212-285-0228

STRUCTURAL ENGINEERS:
WSP
228 East 45th Street
New York, NY 10017
TEL: 212-687-9888 FAX: 646-487-5501

MEP ENGINEERS:
ICOR ASSOCIATES, LLC
485 C Route 1 South, Suite 200
Iseline, NJ 08830
TEL: 908-272-3300 FAX: 908-272-4440

GEOTECHNICAL ENGINEERS:
LANGAN ENGINEERING & ENVIRONMENTAL SERVICES
21 Penn Plaza - 360 West 31st Street, 8th Floor
New York, NY 10001
TEL: 212.479.5400 FAX: 212.479.5444

No.	DESCRIPTION:	DATE:
1	DESIGN DEVELOPMENT	10-07-14
2	CONCRETE BID PACKAGE	03-06-15
3	ISSUED FOR FILING	03-26-15

Discrepancies must be reported immediately to the Architect before proceeding. Only figured dimensions are to be used. Contractors must check all dimensions on site. This drawing is protected by copyright.

ALL DIMENSIONS ARE SHOWN IN IMPERIAL.

CONSULTANT:
AAI ARCHITECTS, P.C.

PROJECT:
250 SOUTH STREET
NEW YORK, NY

DRAWING TITLE:
42ND FLOOR FRAMING PLAN - PART 2

SEAL & SIGNATURE:

DATE:	09/26/14
PROJECT No:	1302510
DRAWN: CAD	REV:
CHK: CL	
SCALE:	
DWG No:	**S-502.00**
DOB PAGE No:	of

DOB EMPLOYEE STAMP:

DOB B-SCAN:

FILE NAME:
PLOT DATE:

DEPT OF BLDGS 121185528 Job Number
ES466028421 Scan Code

1 S-510 43RD-55TH OVERALL FRAMING PLAN

SCALE: 3/32" = 1'-0"

NOTES:

1. TOP OF SLAB ELEVATION TO BE ____ U.O.N. ON PLAN
2. SLAB TO BE 9" THICK U.O.N. THUS ☐ ON PLAN.
3. BOTTOM REINFORCEMENT TO BE: #4@12 FOR 9" SLAB
   #4@10 FOR 10" SLAB
4. FOR BALANCE OF NOTES SEE DRAWING S-010.
5. FOR STR. INTEGRITY REINF. ADD'L INFORMATION SEE S-965.

KEY PLAN:

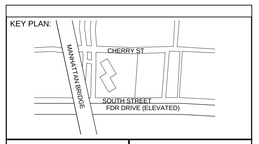

PROJECT NORTH

TRUE NORTH

DEVELOPER:
EXTELL DEVELOPMENT COMPANY
805 Third Ave, 7th Floor
New York, NY 10022
TEL: 212-712-6000 FAX: 212-712-6100

ARCHITECT OF RECORD:
AAI ARCHITECTS, P.C.
14 Wall Street, 2nd Floor
New York, NY 10005
TEL: 212-964-4040 FAX: 212-964-4090

INTERIOR DESIGNER:
MEYER DAVIS
180 Varick St, suite 404
New York, NY 10014
TEL: 212-627-5574

LANDSCAPE DESIGNER:
WEST 8 URBAN DESIGN & LANDSCAPE ARCHITECTURE P.C.
333 Hudson Street, Suite 905
New York, NY 10013
TEL: 212-285-0088 FAX: 212-285-0228

STRUCTURAL ENGINEERS:
WSP
228 East 45th Street
New York, NY 10017
TEL: 212-687-9888 FAX: 646-487-5501

MEP ENGINEERS:
ICOR ASSOCIATES, LLC
485 C Route 1 South, Suite 200
Iseline, NJ 08830
TEL: 908-272-3300 FAX: 908-272-4440

GEOTECHNICAL ENGINEERS:
LANGAN ENGINEERING & ENVIRONMENTAL SERVICES
21 Penn Plaza - 360 West 31st Street, 8th Floor
New York, NY 10001
TEL: 212.479.5400 FAX: 212.479.5444

No.	DESCRIPTION:	DATE:
1	CONCRETE BID PACKAGE	03-06-15
2	ISSUED FOR FILING	03-26-15

Discrepancies must be reported immediately to the Architect before proceeding. Only figured dimensions are to be used. Contractors must check all dimensions on site. This drawing is protected by copyright.

ALL DIMENSIONS ARE SHOWN IN IMPERIAL.

CONSULTANT:
AAI ARCHITECTS, P.C.

PROJECT:
250 SOUTH STREET
NEW YORK, NY

DRAWING TITLE:
43RD-55TH FLOOR OVERALL FRAMING PLAN

SEAL & SIGNATURE:
STATE OF NEW YORK · AHMAD RAHIMIAN · No. 085537 · LICENSED PROFESSIONAL ENGINEER

DATE:	03/03/15
PROJECT No:	1302510
DRAWN: CAD	REV:
CHK: CL	
SCALE: As indicated	
DWG No:	S-510.00
DOB PAGE No:	of

DOB EMPLOYEE STAMP:
Damian Titus
Buildings
APPROVED
Under Directive 2 of 1975
Date: 05/21/2015:
NYC Development Hub

DOB B-SCAN:

30" x 42" Arch E1 - SHEET SIZE
FILE NAME:
PLOT DATE:

DEPT OF BLDGS121185539 Job Number
E1515235552 Scan Code

30" x 42" Arch E1 SHEET SIZE

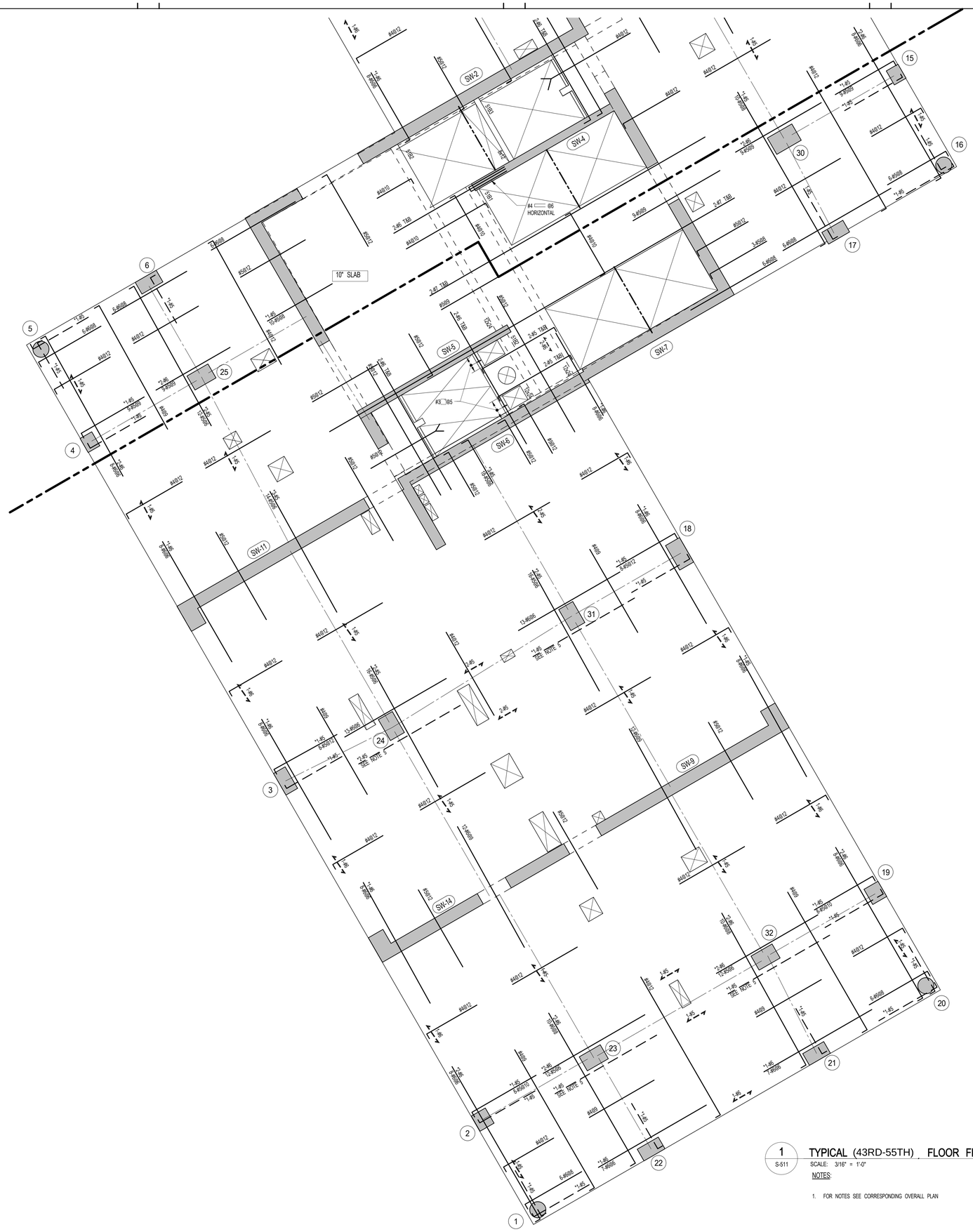

1 S-511 **TYPICAL** (43RD-55TH) **FLOOR FRAMING PLAN - PART 1**

SCALE: 3/16" = 1'-0"

NOTES:

1. FOR NOTES SEE CORRESPONDING OVERALL PLAN

KEY PLAN:

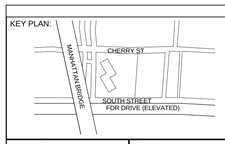

PROJECT NORTH

TRUE NORTH

DEVELOPER:
EXTELL DEVELOPMENT COMPANY
805 Third Ave, 7th Floor
New York, NY 10022
TEL: 212-712-6000 FAX: 212-712-6100

ARCHITECT OF RECORD:
AAI ARCHITECTS, P.C.
14 Wall Street, 2nd Floor
New York, NY 10005
TEL: 212-964-4040 FAX: 212-964-4090

INTERIOR DESIGNER:
MEYER DAVIS
180 Varick St, suite 404
New York, NY 10014
TEL: 212-627-5574

LANDSCAPE DESIGNER:
WEST 8 URBAN DESIGN & LANDSCAPE ARCHITECTURE P.C.
333 Hudson Street, Suite 905
New York, NY 10013
TEL: 212-285-0088 FAX: 212-285-0228

STRUCTURAL ENGINEERS:
WSP
228 East 45th Street
New York, NY 10017
TEL: 212-687-9888 FAX: 646-487-5501

MEP ENGINEERS:
ICOR ASSOCIATES, LLC
485 C Route 1 South, Suite 200
Iseline, NJ 08830
TEL: 908-272-3300 FAX: 908-272-4440

GEOTECHNICAL ENGINEERS:
LANGAN ENGINEERING & ENVIRONMENTAL SERVICES
21 Penn Plaza - 360 West 31st Street, 8th Floor
New York, NY 10001
TEL: 212.479.5400 FAX: 212.479.5444

No.	DESCRIPTION:	DATE:
1	CONCRETE BID PACKAGE	03-06-15
2	ISSUED FOR FILING	03-26-15

Discrepancies must be reported immediately to the Architect before proceeding. Only figured dimensions are to be used. Contractors must check all dimensions on site. This drawing is protected by copyright.

ALL DIMENSIONS ARE SHOWN IN IMPERIAL.

CONSULTANT:
AAI ARCHITECTS, P.C.

PROJECT:
250 SOUTH STREET
NEW YORK, NY

DRAWING TITLE:
43RD-55TH FLOOR FRAMING -PART 1

SEAL & SIGNATURE:
STATE OF NEW YORK · AMRAD RAMESHAR · No. 085552 · LICENSED PROFESSIONAL ENGINEER

DATE:	03/03/15
PROJECT No:	1302510
DRAWN: CAD	REV:
CHK: CL	
SCALE: As indicated	
DWG No:	**S-511.00**
DOB PAGE No:	of

DOB EMPLOYEE STAMP:
Damian Titus
Buildings
APPROVED
Under Directive 2 of 1975
Date: 05/21/2015:
NYC Development Hub

DOB B-SCAN:

FILE NAME:
PLOT DATE:

1 TYPICAL (43RD-55TH) FLOOR FRAMING PLAN - PART 2
S-512
SCALE: 3/16" = 1'-0"

NOTES:

1. FOR NOTES SEE CORRESPONDING OVERALL PLAN

KEY PLAN:

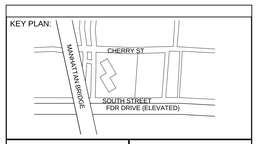

PROJECT NORTH

TRUE NORTH

DEVELOPER:
EXTELL DEVELOPMENT COMPANY
805 Third Ave, 7th Floor
New York, NY 10022
TEL: 212-712-6000 FAX: 212-712-6100

ARCHITECT OF RECORD:
AAI ARCHITECTS, P.C.
14 Wall Street, 2nd Floor
New York, NY 10005
TEL: 212-964-4040 FAX: 212-964-4090

INTERIOR DESIGNER:
MEYER DAVIS
180 Varick St, suite 404
New York, NY 10014
TEL: 212-627-5574

LANDSCAPE DESIGNER:
WEST 8 URBAN DESIGN & LANDSCAPE ARCHITECTURE P.C.
333 Hudson Street, Suite 905
New York, NY 10013
TEL: 212-285-0088 FAX: 212-285-0228

STRUCTURAL ENGINEERS:
WSP
228 East 45th Street
New York, NY 10017
TEL: 212-687-9888 FAX: 646-487-5501

MEP ENGINEERS:
ICOR ASSOCIATES, LLC
485 C Route 1 South, Suite 200
Iseline, NJ 08830
TEL: 908-272-3300 FAX: 908-272-4440

GEOTECHNICAL ENGINEERS:
LANGAN ENGINEERING & ENVIRONMENTAL SERVICES
21 Penn Plaza - 360 West 31st Street, 8th Floor
New York, NY 10001
TEL: 212.479.5400 FAX: 212.479.5444

No.	DESCRIPTION:	DATE:
1	CONCRETE BID PACKAGE	03-06-15
2	ISSUED FOR FILING	03-26-15

Discrepancies must be reported immediately to the Architect before proceeding. Only figured dimensions are to be used. Contractors must check all dimensions on site. This drawing is protected by copyright.

ALL DIMENSIONS ARE SHOWN IN IMPERIAL.

CONSULTANT:
AAI ARCHITECTS, P.C.

PROJECT:
250 SOUTH STREET
NEW YORK, NY

DRAWING TITLE:
43RD-55TH FLOOR FRAMING -PART 2

SEAL & SIGNATURE:
STATE OF NEW YORK
AHMAD RAHIMIAN
No. 085537
LICENSED PROFESSIONAL ENGINEER

DATE:	03/03/15
PROJECT No:	1302510
DRAWN: CAD	REV:
CHK: CL	
SCALE: As indicated	
DWG No:	S-512.00
DOB PAGE No:	of

DOB EMPLOYEE STAMP:
Damian Titus
Buildings
APPROVED
Under Directive 2 of 1975
Date: 05/21/2015:
NYC Development Hub

DOB B-SCAN:

30" x 42" Arch E1 - SHEET SIZE

FILE NAME:
PLOT DATE:

DEPT OF BLDGS121185539 Job Number
E:5201:936200 Scan Code
30" x 42" Arch E1 SHEET SIZE

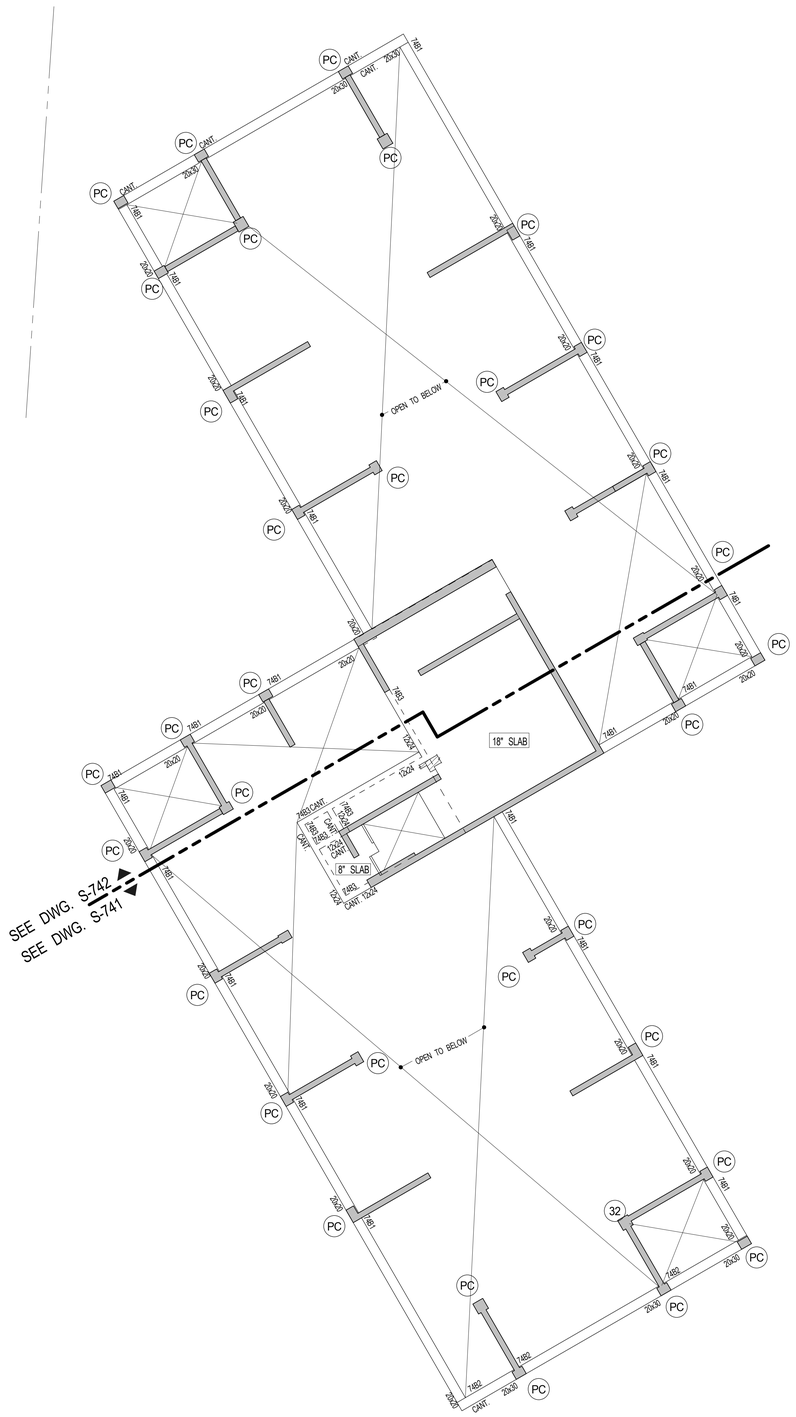

1 S-740 — 56TH FL. ROOM ROOF FRAMING PLAN

SCALE: 3/32" = 1'-0"

NOTES:

1. TOP OF SLAB ELEVATION TO BE U.O.N. ON PLAN
2. SLAB TO BE 18" THICK U.O.N.
3. SLAB REINFORCEMENT TO BE: #5@12 T&B FOR 8" SLAB, #6@12 T&B E.W FOR 18" SLAB
4. ⟷ INDICATES ONE WAY SLAB W/#5@12 T&B
5. FOR BALANCE OF NOTES SEE DRAWING S-010.

74TH FLOOR BEAM SCHEDULE

BEAM MARK	SIZE WIDTH	SIZE DEPTH	REINFORCEMENT BOTTOM CONTINUOUS	REINFORCEMENT TOP CONTINUOUS	REINFORCEMENT TOP ADD'L BARS AT SUPPORT	STIRRUPS TYPE	STIRRUPS SIZE	STIRRUPS SPACING	REMARKS
74B1	20	20	2-#10	2-#10		1	#4	@8	5-#10 E.F.
74B2	20	30	4-#10	4-#10		1	#4	@8	5-#10 E.F. CANT.
74B3	12	24	3-#10	3-#10		1	#4	@6	CANT

TYPE 1

KEY PLAN:

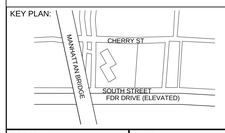

PROJECT NORTH / TRUE NORTH

DEVELOPER:
EXTELL DEVELOPMENT COMPANY
805 Third Ave, 7th Floor
New York, NY 10022
TEL: 212-712-6000 FAX: 212-712-6100

ARCHITECT OF RECORD:
AAI ARCHITECTS, P.C.
14 Wall Street, 2nd Floor
New York, NY 10005
TEL: 212-964-4040 FAX: 212-964-4090

INTERIOR DESIGNER:
MEYER DAVIS
180 Varick St, suite 404
New York, NY 10014
TEL: 212-627-5574

LANDSCAPE DESIGNER:
WEST 8 URBAN DESIGN & LANDSCAPE ARCHITECTURE P.C.
333 Hudson Street, Suite 905
New York, NY 10013
TEL: 212-285-0088 FAX: 212-285-0228

STRUCTURAL ENGINEERS:
WSP
228 East 45th Street
New York, NY 10017
TEL: 212-687-9888 FAX: 646-487-5501

MEP ENGINEERS:
ICOR ASSOCIATES, LLC
485 C Route 1 South, Suite 200
Iseline, NJ 08830
TEL: 908-272-3300 FAX: 908-272-4440

GEOTECHNICAL ENGINEERS:
LANGAN ENGINEERING & ENVIRONMENTAL SERVICES
21 Penn Plaza - 360 West 31st Street, 8th Floor
New York, NY 10001
TEL: 212.479.5400 FAX: 212.479.5444

No.	DESCRIPTION:	DATE:
1	CURTAIN WALL PACKAGE	09-26-14
2	DESIGN DEVELOPMENT	10-07-14
3	CONCRETE BID PACKAGE	03-06-15
4	ISSUED FOR FILING	03-26-15

Discrepancies must be reported immediately to the Architect before proceeding. Only figured dimensions are to be used. Contractors must check all dimensions on site. This drawing is protected by copyright.

ALL DIMENSIONS ARE SHOWN IN IMPERIAL.

CONSULTANT: AAI ARCHITECTS, P.C.

PROJECT:
250 SOUTH STREET
NEW YORK, NY

DRAWING TITLE:
56TH FL. - MECH 4 OVERALL FRAMING PLAN

SEAL & SIGNATURE:

DATE:	09/26/14
PROJECT No:	1302510
DRAWN: CAD	REV:
CHK: CL	
SCALE:	
DWG No:	**S-740.00**
DOB PAGE No:	of

DOB EMPLOYEE STAMP:

DOB B-SCAN:

FILE NAME:
PLOT DATE:

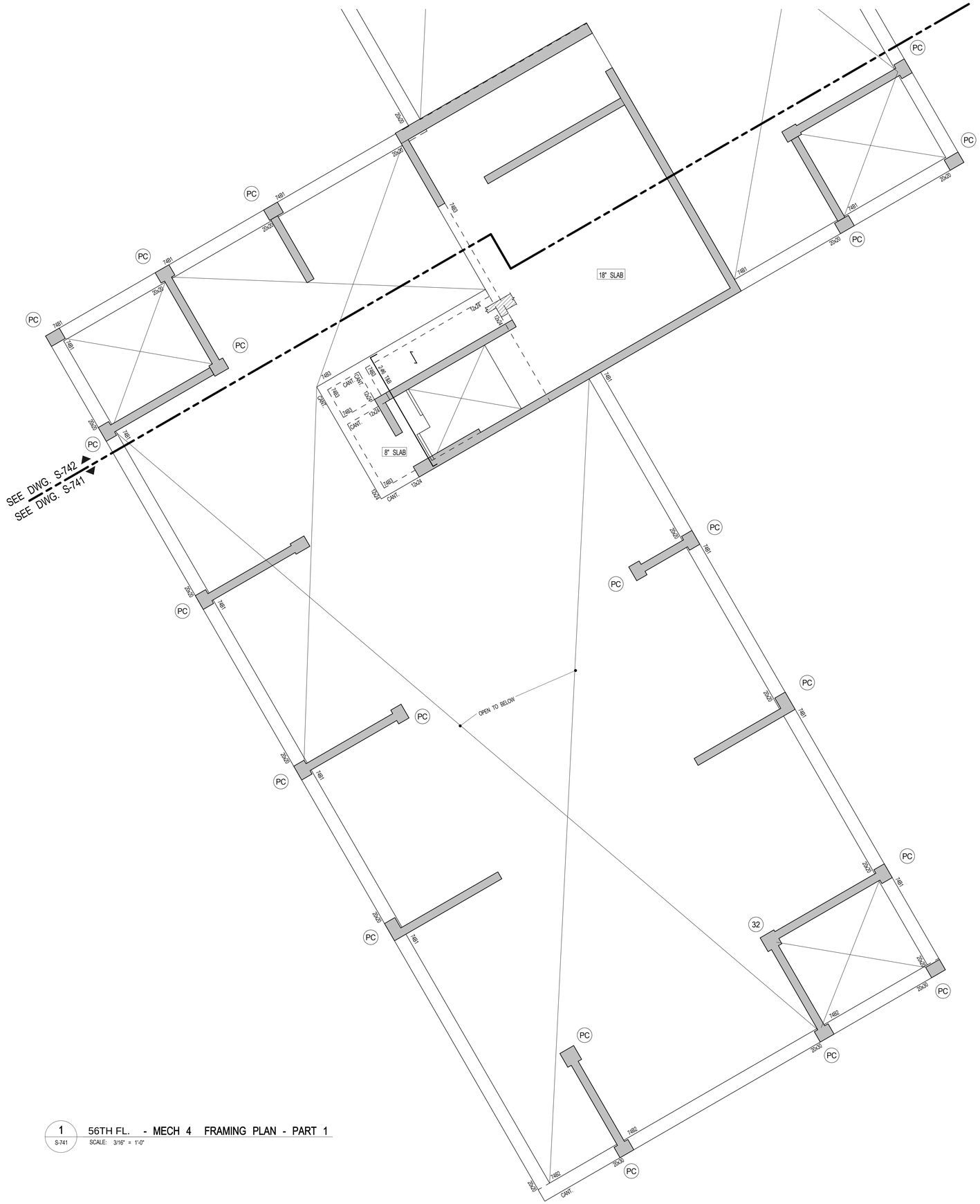

1 S-741 56TH FL. - MECH 4 FRAMING PLAN - PART 1
SCALE: 3/16" = 1'-0"

KEY PLAN:

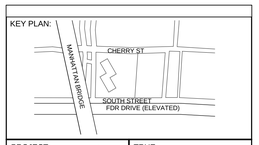

PROJECT NORTH

TRUE NORTH

DEVELOPER:
EXTELL DEVELOPMENT COMPANY
805 Third Ave, 7th Floor
New York, NY 10022
TEL: 212-712-6000 FAX: 212-712-6100

ARCHITECT OF RECORD:
AAI ARCHITECTS, P.C.
14 Wall Street, 2nd Floor
New York, NY 10005
TEL: 212-964-4040 FAX: 212-964-4090

INTERIOR DESIGNER:
MEYER DAVIS
180 Varick St, suite 404
New York, NY 10014
TEL: 212-627-5574

LANDSCAPE DESIGNER:
WEST 8 URBAN DESIGN & LANDSCAPE ARCHITECTURE P.C.
333 Hudson Street, Suite 905
New York, NY 10013
TEL: 212-285-0088 FAX: 212-285-0228

STRUCTURAL ENGINEERS:
WSP
228 East 45th Street
New York, NY 10017
TEL: 212-687-9888 FAX: 646-487-5501

MEP ENGINEERS:
ICOR ASSOCIATES, LLC
485 C Route 1 South, Suite 200
Iseline, NJ 08830
TEL: 908-272-3300 FAX: 908-272-4440

GEOTECHNICAL ENGINEERS:
LANGAN ENGINEERING & ENVIRONMENTAL SERVICES
21 Penn Plaza - 360 West 31st Street, 8th Floor
New York, NY 10001
TEL: 212.479.5400 FAX: 212.479.5444

No.	DESCRIPTION:	DATE:
1	CONCRETE BID PACKAGE	03-06-15
2	ISSUED FOR FILING	03-26-15

Discrepancies must be reported immediately to the Architect before proceeding. Only figured dimensions are to be used. Contractors must check all dimensions on site. This drawing is protected by copyright.

ALL DIMENSIONS ARE SHOWN IN IMPERIAL.

CONSULTANT:
AAI ARCHITECTS, P.C.

PROJECT:
250 SOUTH STREET
NEW YORK, NY

DRAWING TITLE:
56TH FL. - MECH 4 FRAMING PLAN - PART 1

SEAL & SIGNATURE:
STATE OF NEW YORK
AHMAD RAHIMIAN
No. 085537
LICENSED PROFESSIONAL ENGINEER

DATE:	03/06/15
PROJECT No:	1302510
DRAWN: CAD	REV:
CHK: CL	
SCALE: 3/16" = 1'-0"	
DWG No:	S-741.00
DOB PAGE No:	of

DOB EMPLOYEE STAMP:
Damian Titus
Buildings
APPROVED
Under Directive 2 of 1975
Date: 05/21/2015:
NYC Development Hub

DOB B-SCAN:

30" x 42" Arch E1 - SHEET SIZE

FILE NAME:
PLOT DATE:

DEPT OF BLDGS121185539 Job Number
E320972276 Scan Code
30" x 42" Arch E1 SHEET SIZE

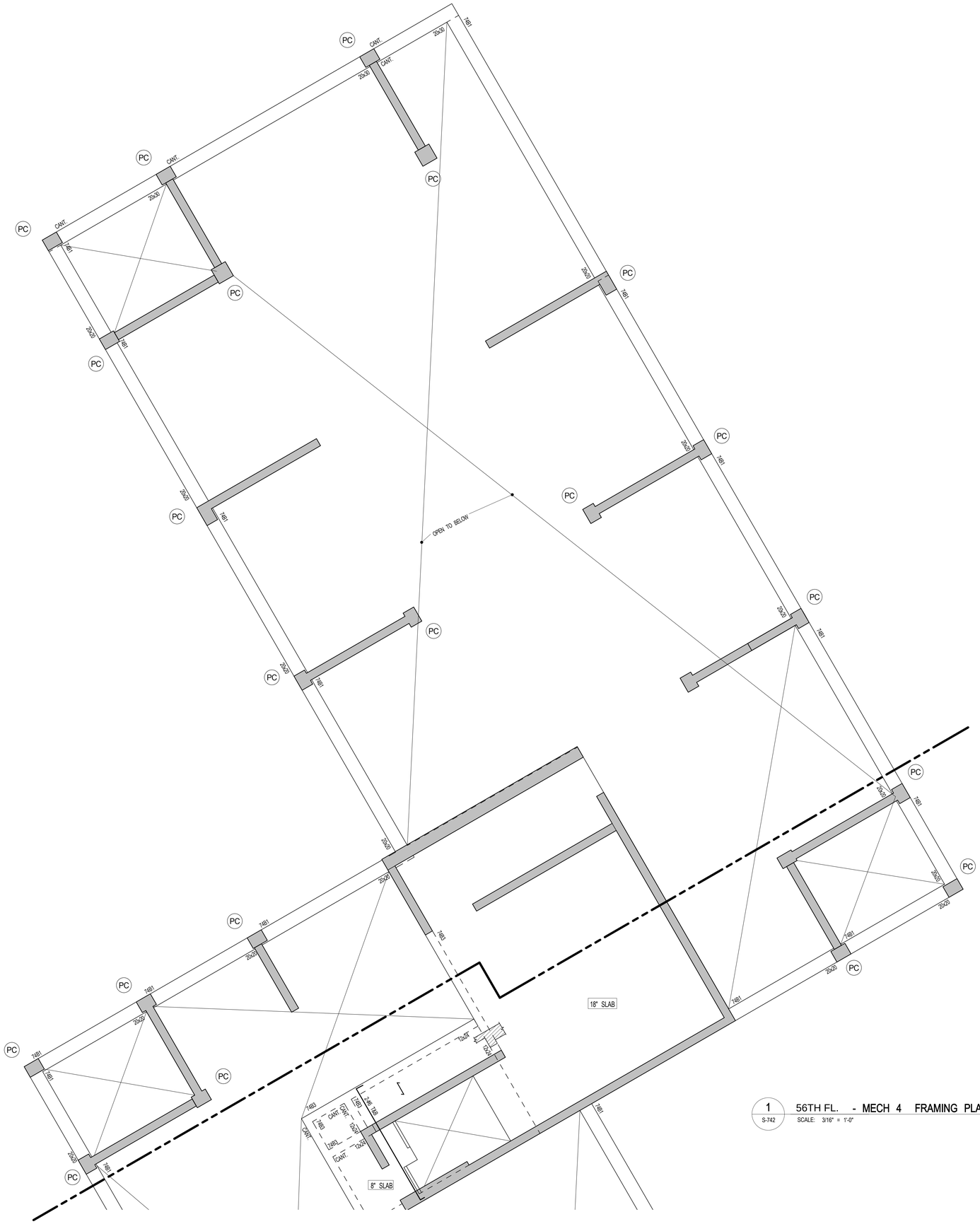

1 S-742 56TH FL. - MECH 4 FRAMING PLAN - PART 2
SCALE: 3/16" = 1'-0"

KEY PLAN:

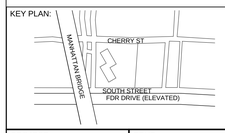

PROJECT NORTH

TRUE NORTH

DEVELOPER:
EXTELL DEVELOPMENT COMPANY
805 Third Ave, 7th Floor
New York, NY 10022
TEL: 212-712-6000 FAX: 212-712-6100

ARCHITECT OF RECORD:
AAI ARCHITECTS, P.C.
14 Wall Street, 2nd Floor
New York, NY 10005
TEL: 212-964-4040 FAX: 212-964-4090

INTERIOR DESIGNER:
MEYER DAVIS
180 Varick St, suite 404
New York, NY 10014
TEL: 212-627-5574

LANDSCAPE DESIGNER:
WEST 8 URBAN DESIGN & LANDSCAPE ARCHITECTURE P.C.
333 Hudson Street, Suite 905
New York, NY 10013
TEL: 212-285-0088 FAX: 212-285-0228

STRUCTURAL ENGINEERS:
WSP
228 East 45th Street
New York, NY 10017
TEL: 212-687-9888 FAX: 646-487-5501

MEP ENGINEERS:
ICOR ASSOCIATES, LLC
485 C Route 1 South, Suite 200
Iselin, NJ 08830
TEL: 908-272-3300 FAX: 908-272-4440

GEOTECHNICAL ENGINEERS:
LANGAN ENGINEERING & ENVIRONMENTAL SERVICES
21 Penn Plaza - 360 West 31st Street, 8th Floor
New York, NY 10001
TEL: 212.479.5400 FAX: 212.479.5444

No.	DESCRIPTION:	DATE:
1	CONCRETE BID PACKAGE	03-06-15
2	ISSUED FOR FILING	03-26-15

Discrepancies must be reported immediately to the Architect before proceeding. Only figured dimensions are to be used. Contractors must check all dimensions on site. This drawing is protected by copyright.

ALL DIMENSIONS ARE SHOWN IN IMPERIAL.

CONSULTANT:
AAI ARCHITECTS, P.C.

PROJECT:
250 SOUTH STREET
NEW YORK, NY

DRAWING TITLE:
56TH FL. - MECH 4 FRAMING PLAN - PART 2

SEAL & SIGNATURE:
STATE OF NEW YORK · DONALD RAMSAY · NO. 085637 · LICENSED PROFESSIONAL ENGINEER

DATE:	03/06/15
PROJECT No:	1302510
DRAWN: CAD	REV:
CHK: CL	
SCALE: 3/16" = 1'-0"	
DWG No:	**S-742.00**
DOB PAGE No:	of

DOB EMPLOYEE STAMP:
Damian Titus
Buildings
APPROVED
Under Directive 2 of 1975
Date: 05/21/2015:
NYC Development Hub

DOB B-SCAN:

FILE NAME:
PLOT DATE:

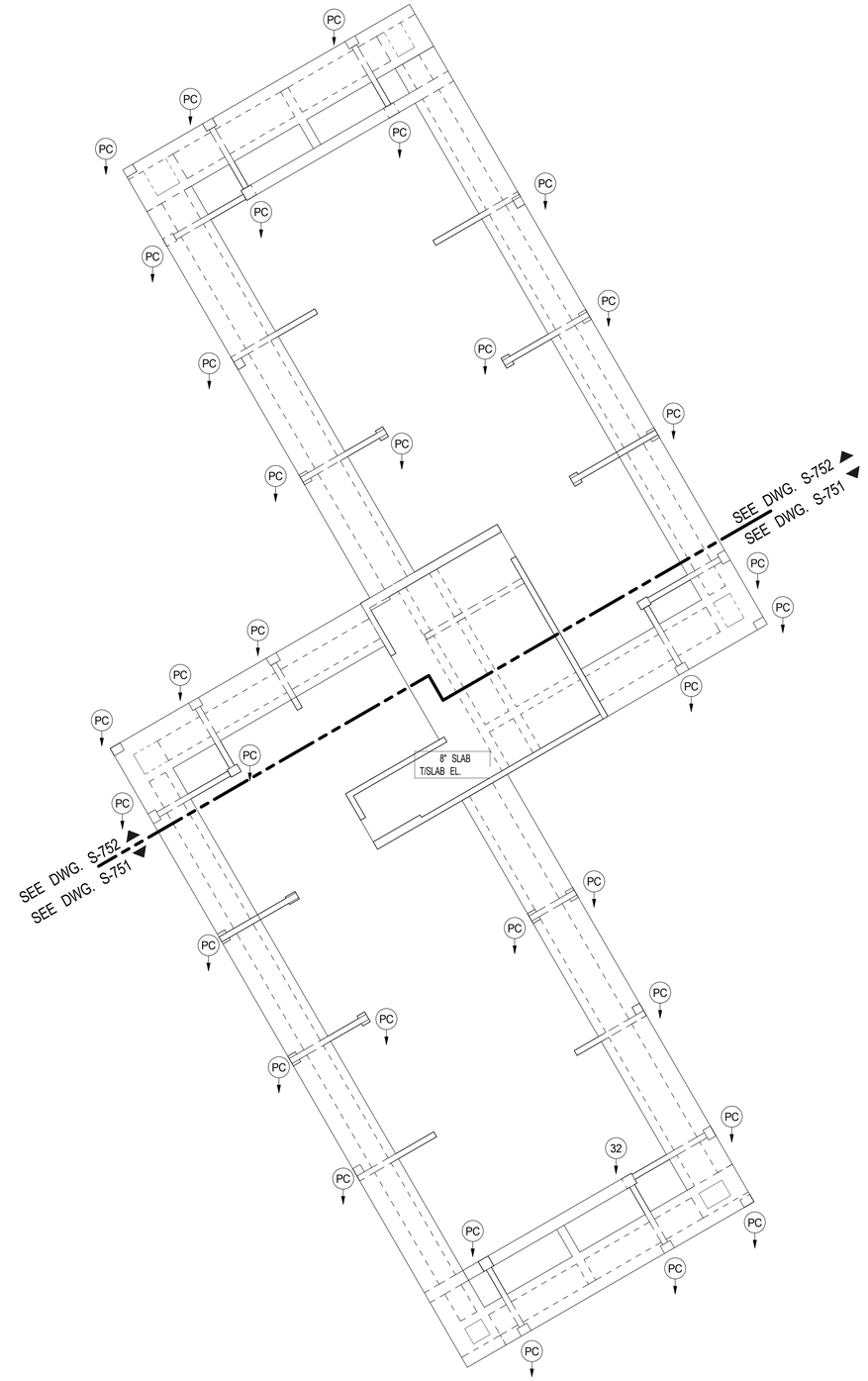

1 57TH FLOOR **OVERALL FRAMING PLAN**

3/32" = 1'-0"

NOTES:

1. BOTTOM SLAB REINFORCEMENT TO BE #5@12 E.W. FOR 12" SLAB

INDICATES 12" ONE WAY SLAB W/#5@12 TOP&BOTT.

INDICATES 24" TWO WAY SLAB W/#7@12 TOP&BOTT. EACH WAY

PC INDICATES 18X24 POST W/ 4-#7 @ EACH SHORT EDGE

BULKHEAD BEAM SCHEDULE

BEAM MARK	SIZE		REINFORCEMENT			STIRRUPS			REMARKS
	WIDTH	DEPTH	BOTTOM CONTINUOUS	TOP CONTINUOUS	TOP ADD'L BARS AT SUPPORT	TYPE	SIZE	SPACING	
CB1	36	24	4-#10	4-#10		1	#4	@10	
CB2	18	24	4-#10	4-#10		1	#4	@10	
CB3	24	48	6-#10	6-#10		1	#4	@10	UP TURN
CB4	18	24	10-#10 (2 LAYERS)	10-#10 (2 LAYERS)		1	#4	@10	

TYPE 1

KEY PLAN:

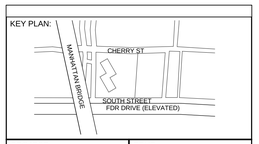

PROJECT NORTH

TRUE NORTH

DEVELOPER:
EXTELL DEVELOPMENT COMPANY
805 Third Ave, 7th Floor
New York, NY 10022
TEL: 212-712-6000 FAX: 212-712-6100

ARCHITECT OF RECORD:
AAI ARCHITECTS, P.C.
14 Wall Street, 2nd Floor
New York, NY 10005
TEL: 212-964-4040 FAX: 212-964-4090

INTERIOR DESIGNER:
MEYER DAVIS
180 Varick St, suite 404
New York, NY 10014
TEL: 212-627-5574

LANDSCAPE DESIGNER:
WEST 8 URBAN DESIGN & LANDSCAPE ARCHITECTURE P.C.
333 Hudson Street, Suite 905
New York, NY 10013
TEL: 212-285-0088 FAX: 212-285-0228

STRUCTURAL ENGINEERS:
WSP
228 East 45th Street
New York, NY 10017
TEL: 212-687-9888 FAX: 646-487-5501

MEP ENGINEERS:
ICOR ASSOCIATES, LLC
485 C Route 1 South, Suite 200
Iseline, NJ 08830
TEL: 908-272-3300 FAX: 908-272-4440

GEOTECHNICAL ENGINEERS:
LANGAN ENGINEERING & ENVIRONMENTAL SERVICES
21 Penn Plaza - 360 West 31st Street, 8th Floor
New York, NY 10001
TEL: 212.479.5400 FAX: 212.479.5444

No.	DESCRIPTION:	DATE:
1	CONCRETE BID PACKAGE	03-06-15

Discrepancies must be reported immediately to the Architect before proceeding. Only figured dimensions are to be used. Contractors must check all dimensions on site. This drawing is protected by copyright.

ALL DIMENSIONS ARE SHOWN IN IMPERIAL.

CONSULTANT:
AAI ARCHITECTS, P.C.

PROJECT:
250 SOUTH STREET
NEW YORK, NY

DRAWING TITLE:
57TH FLOOR OVERALL FRAMING PLAN (75TH FL.)

SEAL & SIGNATURE:

STATE OF NEW YORK
AHMAD RAHIMIAN
No. 085507
LICENSED PROFESSIONAL ENGINEER

DATE:	03/06/15
PROJECT No:	1302510
DRAWN: CAD	REV:
CHK: CL	
SCALE: As indicated	
DWG No:	**S-750.00**
DOB PAGE No:	of

DOB EMPLOYEE STAMP:

Damian Titus
NYC Buildings
APPROVED
Under Directive 2 of 1975
Date: 05/21/2015:
NYC Development Hub

DOB B-SCAN:

30" x 42" Arch E1 -SHEET SIZE

FILE NAME:
PLOT DATE:

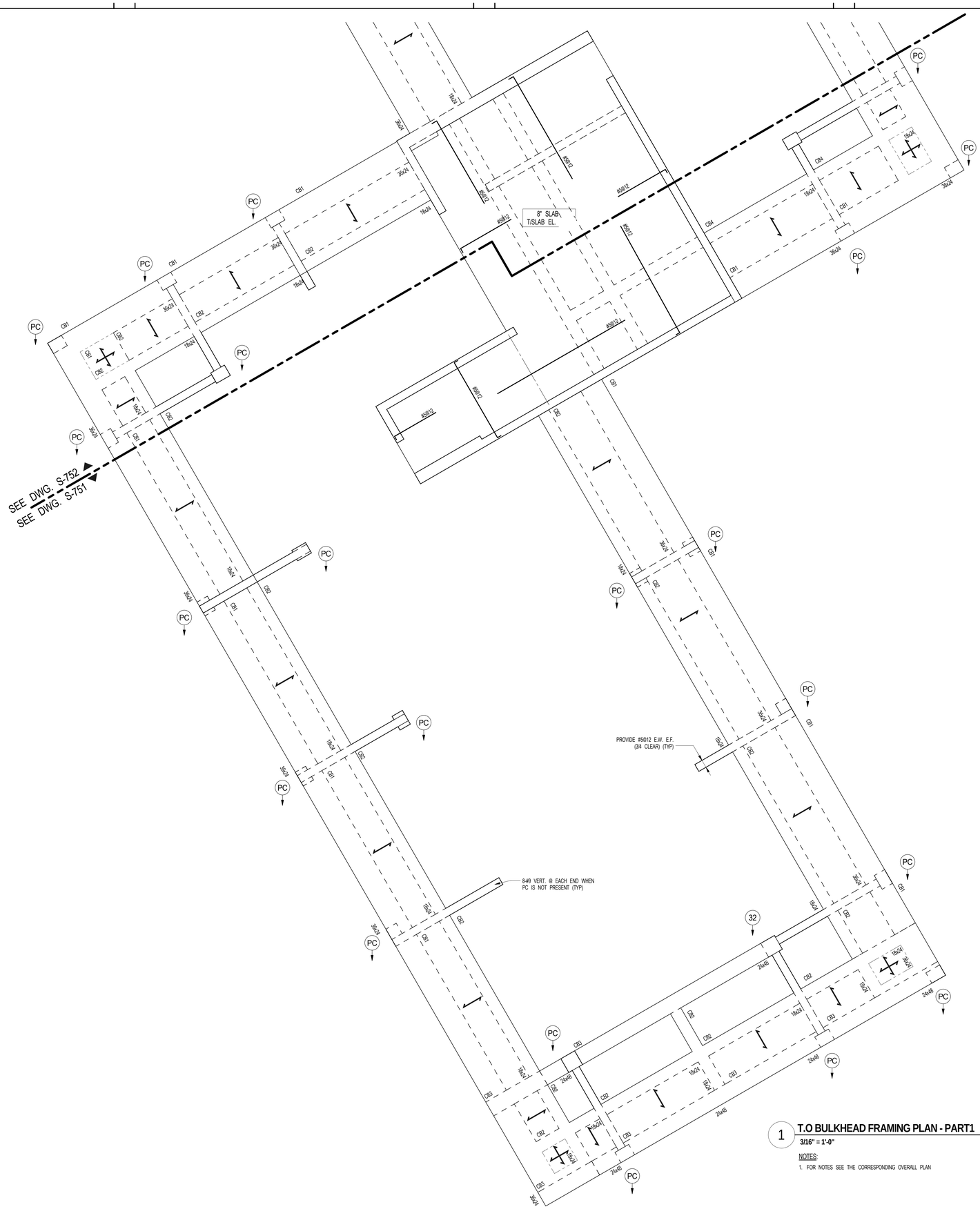

1 **T.O BULKHEAD FRAMING PLAN - PART1**

3/16" = 1'-0"

NOTES:

1. FOR NOTES SEE THE CORRESPONDING OVERALL PLAN

KEY PLAN:

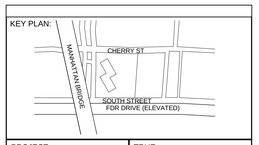

PROJECT NORTH

TRUE NORTH

DEVELOPER:
EXTELL DEVELOPMENT COMPANY
805 Third Ave, 7th Floor
New York, NY 10022
TEL: 212-712-6000 FAX: 212-712-6100

ARCHITECT OF RECORD:
AAI ARCHITECTS, P.C.
14 Wall Street, 2nd Floor
New York, NY 10005
TEL: 212-964-4040 FAX: 212-964-4090

INTERIOR DESIGNER:
MEYER DAVIS
180 Varick St, suite 404
New York, NY 10014
TEL: 212-627-5574

LANDSCAPE DESIGNER:
WEST 8 URBAN DESIGN & LANDSCAPE ARCHITECTURE P.C.
333 Hudson Street, Suite 905
New York, NY 10013
TEL: 212-285-0088 FAX: 212-285-0228

STRUCTURAL ENGINEERS:
WSP
228 East 45th Street
New York, NY 10017
TEL: 212-687-9888 FAX: 646-487-5501

MEP ENGINEERS:
ICOR ASSOCIATES, LLC
485 C Route 1 South, Suite 200
Iseline, NJ 08830
TEL: 908-272-3300 FAX: 908-272-4440

GEOTECHNICAL ENGINEERS:
LANGAN ENGINEERING & ENVIRONMENTAL SERVICES
21 Penn Plaza - 360 West 31st Street, 8th Floor
New York, NY 10001
TEL: 212.479.5400 FAX: 212.479.5444

No.	DESCRIPTION:	DATE:
1	CONCRETE BID PACKAGE	03-06-15
2	ISSUED FOR FILING	03-26-15

Discrepancies must be reported immediately to the Architect before proceeding. Only figured dimensions are to be used. Contractors must check all dimensions on site. This drawing is protected by copyright.

ALL DIMENSIONS ARE SHOWN IN IMPERIAL.

CONSULTANT:
AAI ARCHITECTS, P.C.

PROJECT:
250 SOUTH STREET
NEW YORK, NY

DRAWING TITLE:
T.O BULKHEAD FRAMING PLAN - PART1

SEAL & SIGNATURE:
STATE OF NEW YORK
AHMAD RAHIMIAN
No. 065537
LICENSED PROFESSIONAL ENGINEER

DATE:	03/06/15
PROJECT No:	1302510
DRAWN: CAD	REV:
CHK: CL	
SCALE: As indicated	
DWG No:	S-751.00
DOB PAGE No:	of

DOB EMPLOYEE STAMP:
Damian Titus
NYC Buildings
APPROVED
Under Directive 2 of 1975
Date: 05/21/2015:
NYC Development Hub

DOB B-SCAN:

30" x 42" Arch E1 - SHEET SIZE

FILE NAME:
PLOT DATE:

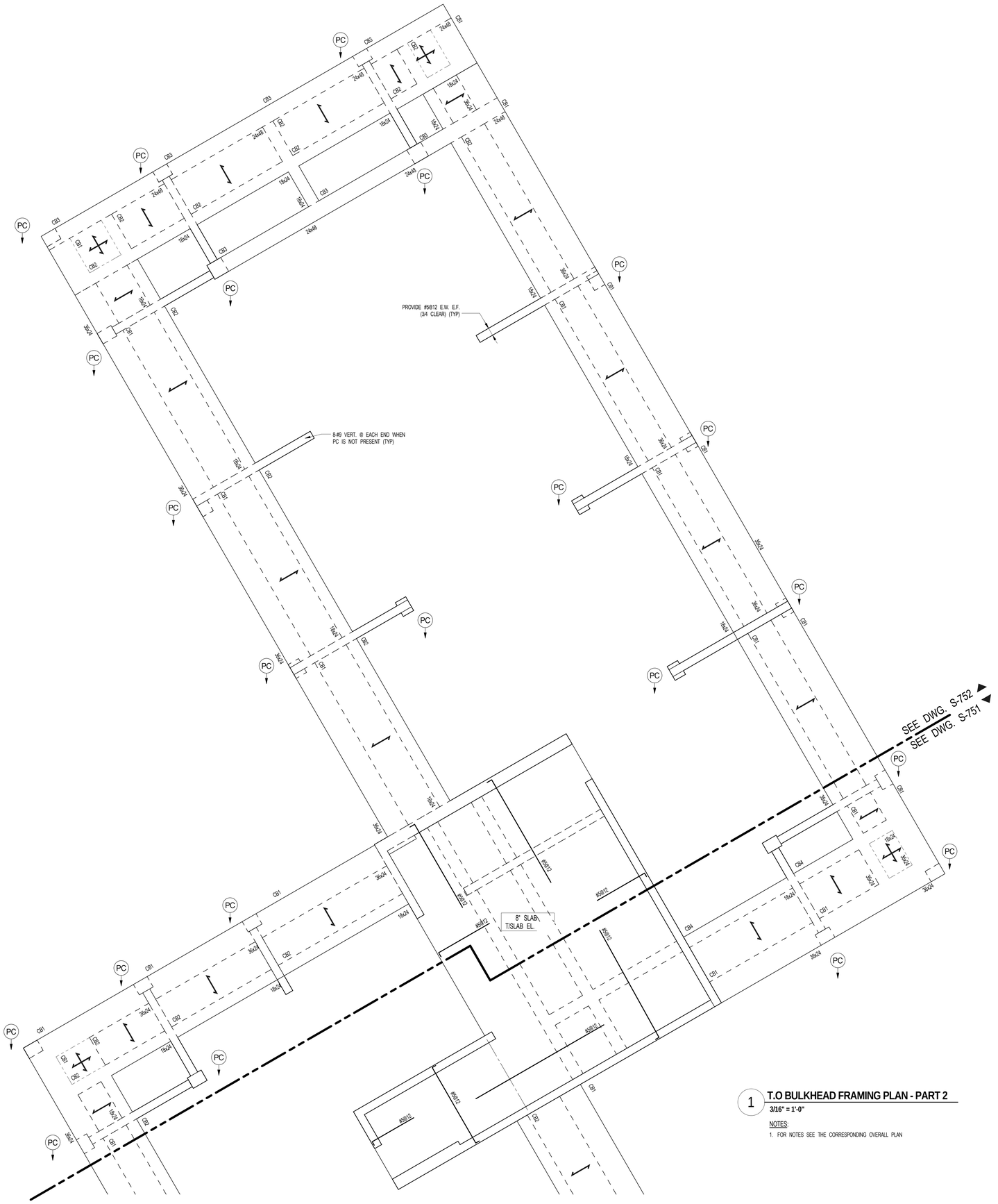

1 **T.O BULKHEAD FRAMING PLAN - PART 2**

3/16" = 1'-0"

NOTES:

1. FOR NOTES SEE THE CORRESPONDING OVERALL PLAN

KEY PLAN:

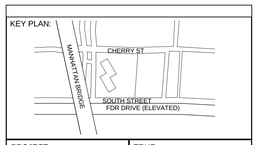

PROJECT NORTH

TRUE NORTH

DEVELOPER:

EXTELL DEVELOPMENT COMPANY
805 Third Ave, 7th Floor
New York, NY 10022
TEL: 212-712-6000 FAX: 212-712-6100

ARCHITECT OF RECORD:

AAI ARCHITECTS, P.C.
14 Wall Street, 2nd Floor
New York, NY 10005
TEL: 212-964-4040 FAX: 212-964-4090

INTERIOR DESIGNER:

MEYER DAVIS
180 Varick St, suite 404
New York, NY 10014
TEL: 212-627-5574

LANDSCAPE DESIGNER:

WEST 8 URBAN DESIGN & LANDSCAPE ARCHITECTURE P.C.
333 Hudson Street, Suite 905
New York, NY 10013
TEL: 212-285-0088 FAX: 212-285-0228

STRUCTURAL ENGINEERS:

WSP
228 East 45th Street
New York, NY 10017
TEL: 212-687-9888 FAX: 646-487-5501

MEP ENGINEERS:

ICOR ASSOCIATES, LLC
485 C Route 1 South, Suite 200
Iseline, NJ 08830
TEL: 908-272-3300 FAX: 908-272-4440

GEOTECHNICAL ENGINEERS:

LANGAN ENGINEERING & ENVIRONMENTAL SERVICES
21 Penn Plaza - 360 West 31st Street, 8th Floor
New York, NY 10001
TEL: 212.479.5400 FAX: 212.479.5444

No.	DESCRIPTION:	DATE:
1	CONCRETE BID PACKAGE	03-06-15
2	ISSUED FOR FILING	03-26-15

Discrepancies must be reported immediately to the Architect before proceeding. Only figured dimensions are to be used. Contractors must check all dimensions on site. This drawing is protected by copyright.

ALL DIMENSIONS ARE SHOWN IN IMPERIAL.

CONSULTANT:

AAI ARCHITECTS, P.C.

PROJECT:

250 SOUTH STREET
NEW YORK, NY

DRAWING TITLE:

T.O BULKHEAD FRAMING PLAN - PART 2

SEAL & SIGNATURE:

STATE OF NEW YORK
AHMAD RAHIMIAN
No. 065537
LICENSED PROFESSIONAL ENGINEER

DATE:	03/06/15
PROJECT No:	1302510
DRAWN: CAD	REV:
CHK: CL	
SCALE: As indicated	
DWG No:	**S-752.00**
DOB PAGE No:	of

DOB EMPLOYEE STAMP:

Damian Titus
NYC Buildings
APPROVED
Under Directive 2 of 1975
Date: 05/21/2015:
NYC Development Hub

DOB B-SCAN:

DEPT OF BLDGS 121185528 Job Number
ES525682531 Scan Code
30" x 42" Arch E1 - SHEET SIZE
FILE NAME:
PLOT DATE:

DEPT OF BLDGS121185528 Job Number
E580485950I0 Scan Code
30" x 42" Arch E1 SHEET SIZE

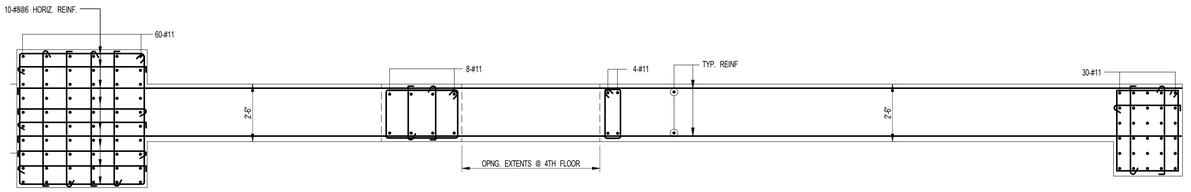

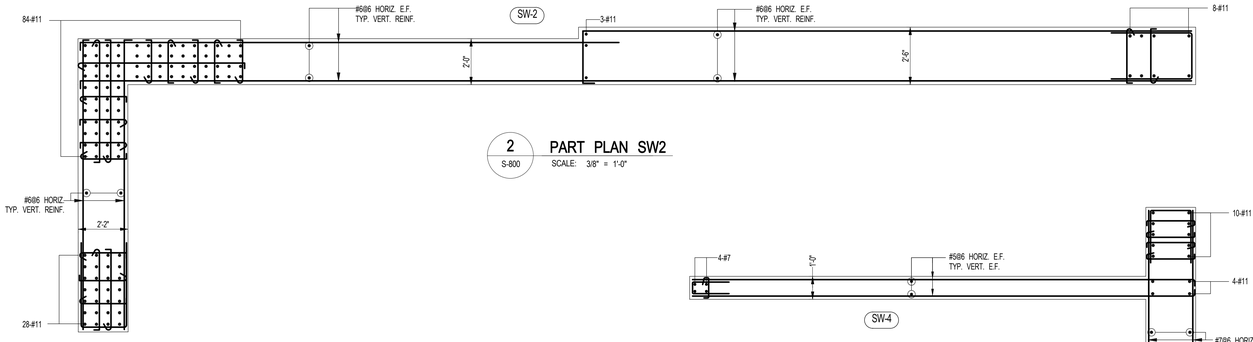

2 S-800 PART PLAN SW2
SCALE: 3/8" = 1'-0"

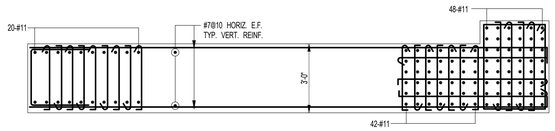

3 S-800 PART PLAN SW3
SCALE: 3/8" = 1'-0"

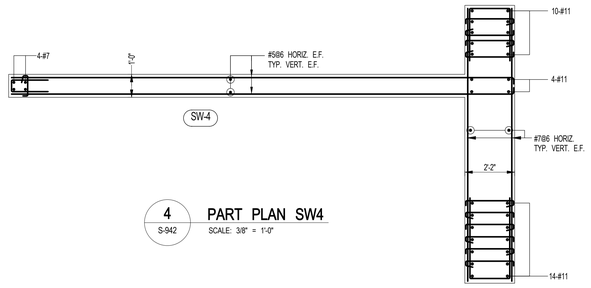

4 S-942 PART PLAN SW4
SCALE: 3/8" = 1'-0"

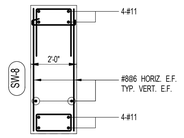

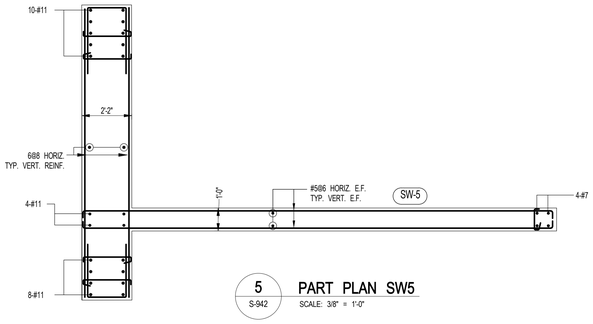

5 S-942 PART PLAN SW5
SCALE: 3/8" = 1'-0"

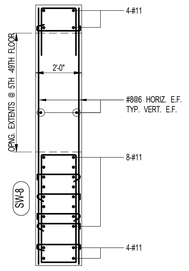

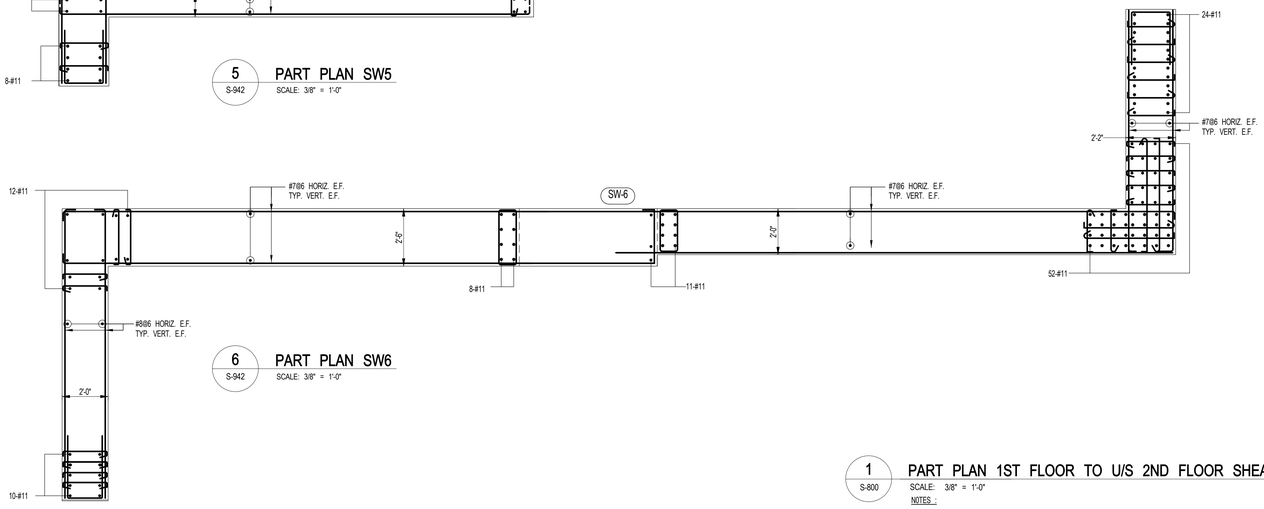

6 S-942 PART PLAN SW6
SCALE: 3/8" = 1'-0"

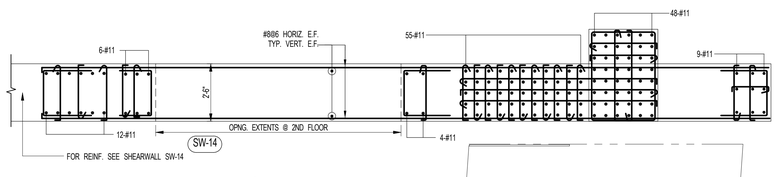

5 S-800 PART PLAN SW9
SCALE: 3/8" = 1'-0"

1 S-800 PART PLAN 1ST FLOOR TO U/S 2ND FLOOR SHEARWALL DETAILS
SCALE: 3/8" = 1'-0"
NOTES :

1. FOR NOTES SEE DRAWING S-940

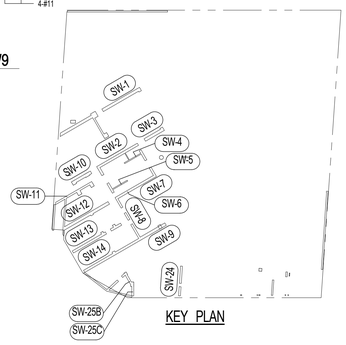

KEY PLAN

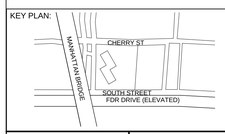

PROJECT NORTH

TRUE NORTH

DEVELOPER:
EXTELL DEVELOPMENT COMPANY
805 Third Ave, 7th Floor
New York, NY 10022
TEL: 212-712-6000 FAX: 212-712-6100

ARCHITECT OF RECORD:
AAI ARCHITECTS, P.C.
14 Wall Street, 2nd Floor
New York, NY 10005
TEL: 212-964-4040 FAX: 212-964-4090

INTERIOR DESIGNER:
MEYER DAVIS
180 Varick St, suite 404
New York, NY 10014
TEL: 212-627-5574

LANDSCAPE DESIGNER:
WEST 8 URBAN DESIGN & LANDSCAPE ARCHITECTURE P.C.
333 Hudson Street, Suite 905
New York, NY 10013
TEL: 212-285-0088 FAX: 212-285-0228

STRUCTURAL ENGINEERS:
WSP
228 East 45th Street
New York, NY 10017
TEL: 212-687-9888 FAX: 646-487-5501

MEP ENGINEERS:
ICOR ASSOCIATES, LLC
485 C Route 1 South, Suite 200
Iseline, NJ 08830
TEL: 908-272-3300 FAX: 908-272-4440

GEOTECHNICAL ENGINEERS:
LANGAN ENGINEERING & ENVIRONMENTAL SERVICES
21 Penn Plaza - 360 West 31st Street, 8th Floor
New York, NY 10001
TEL: 212.479.5400 FAX: 212.479.5444

No.	DESCRIPTION:	DATE:
1	CONCRETE BID PACKAGE	03-06-15
2	ISSUED FOR FILING	03-26-15

Discrepancies must be reported immediately to the Architect before proceeding. Only figured dimensions are to be used. Contractors must check all dimensions on site. This drawing is protected by copyright.

ALL DIMENSIONS ARE SHOWN IN IMPERIAL.

CONSULTANT:
AAI ARCHITECTS, P.C.

PROJECT:
250 SOUTH STREET
NEW YORK, NY

DRAWING TITLE:
1ST FLOOR TO U/S 2ND FLOOR SHEARWALL DETAILS

SEAL & SIGNATURE:
STATE OF NEW YORK · ARMAD RAMDHANI · No. 085552 · LICENSED PROFESSIONAL ENGINEER

DATE:	03/03/15
PROJECT No:	1302510
DRAWN: CAD	REV:
CHK: CL	
SCALE: As indicated	
DWG No:	**S-800.00**
DOB PAGE No:	of

DOB EMPLOYEE STAMP:
Damian Titus
NYC Buildings
APPROVED
Under Directive 2 of 1975
Date: 05/21/2015:
NYC Development Hub

DOB B-SCAN:

FILE NAME:
PLOT DATE:

DEPT OF BLDGS121180528 Job Number
ES398660942 Scan Code

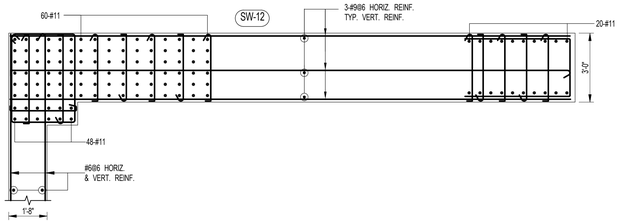

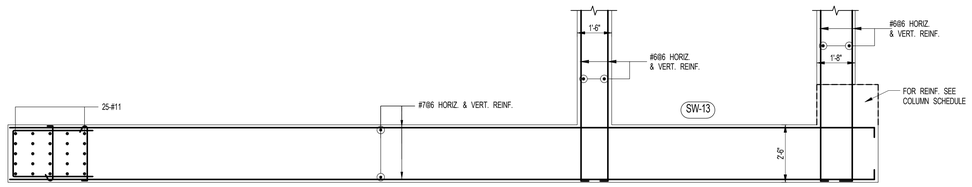

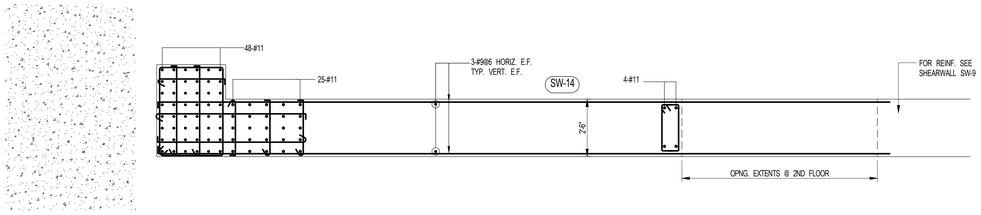

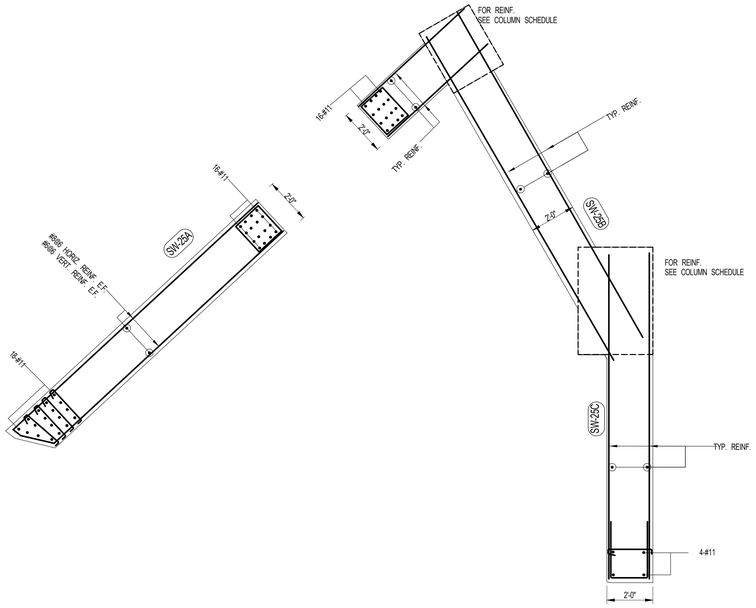

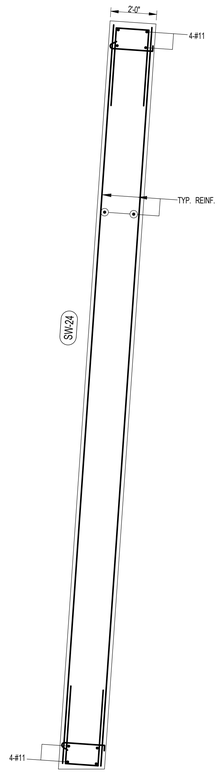

1 S-801 PART PLAN 1ST FLOOR TO U/S 2ND FLOOR SHEARWALL DETAILS

SCALE: 3/8" = 1'-0"

NOTES :

1. FOR NOTES SEE DRAWING S-940

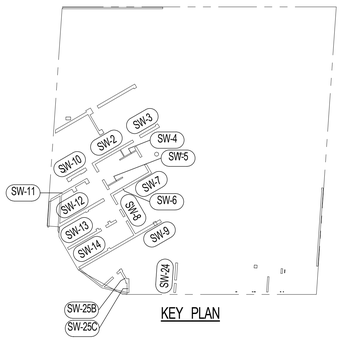

KEY PLAN

KEY PLAN:

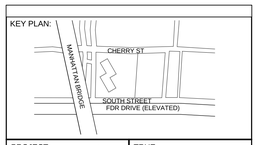

PROJECT NORTH

TRUE NORTH

DEVELOPER:
EXTELL DEVELOPMENT COMPANY
805 Third Ave, 7th Floor
New York, NY 10022
TEL: 212-712-6000 FAX: 212-712-6100

ARCHITECT OF RECORD:
AAI ARCHITECTS, P.C.
14 Wall Street, 2nd Floor
New York, NY 10005
TEL: 212-964-4040 FAX: 212-964-4090

INTERIOR DESIGNER:
MEYER DAVIS
180 Varick St, suite 404
New York, NY 10014
TEL: 212-627-5574

LANDSCAPE DESIGNER:
WEST 8 URBAN DESIGN & LANDSCAPE ARCHITECTURE P.C.
333 Hudson Street, Suite 905
New York, NY 10013
TEL: 212-285-0088 FAX: 212-285-0228

STRUCTURAL ENGINEERS:
WSP
228 East 45th Street
New York, NY 10017
TEL: 212-687-9888 FAX: 646-487-5501

MEP ENGINEERS:
ICOR ASSOCIATES, LLC
485 C Route 1 South, Suite 200
Iseline, NJ 08830
TEL: 908-272-3300 FAX: 908-272-4440

GEOTECHNICAL ENGINEERS:
LANGAN ENGINEERING & ENVIRONMENTAL SERVICES
21 Penn Plaza - 360 West 31st Street, 8th Floor
New York, NY 10001
TEL: 212.479.5400 FAX: 212.479.5444

No.	DESCRIPTION:	DATE:
1	CONCRETE BID PACKAGE	03-06-15
2	ISSUED FOR FILING	03-26-15

Discrepancies must be reported immediately to the Architect before proceeding. Only figured dimensions are to be used. Contractors must check all dimensions on site. This drawing is protected by copyright.

ALL DIMENSIONS ARE SHOWN IN IMPERIAL.

CONSULTANT:
AAI ARCHITECTS, P.C.

PROJECT:
250 SOUTH STREET
NEW YORK, NY

DRAWING TITLE:
1ST FLOOR TO U/S 2ND FLOOR SHEARWALL DETAILS

SEAL & SIGNATURE:

STATE OF NEW YORK
AHMAD RAHIMIAN
No. 085537
LICENSED PROFESSIONAL ENGINEER

DATE:	03/04/15
PROJECT No:	1302510
DRAWN: CAD	REV:
CHK: CL	
SCALE: As indicated	
DWG No:	S-801.00
DOB PAGE No:	of

DOB EMPLOYEE STAMP:

Damian Titus
Buildings
APPROVED
Under Directive 2 of 1975
Date: 05/21/2015:
NYC Development Hub

DOB B-SCAN:

30" x 42" Arch E1 - SHEET SIZE

FILE NAME:
PLOT DATE:

DEPT OF BLDGS121185539 Job Number
E:599/1407499 Scan Code
30" x 42" Arch E1 SHEET SIZE

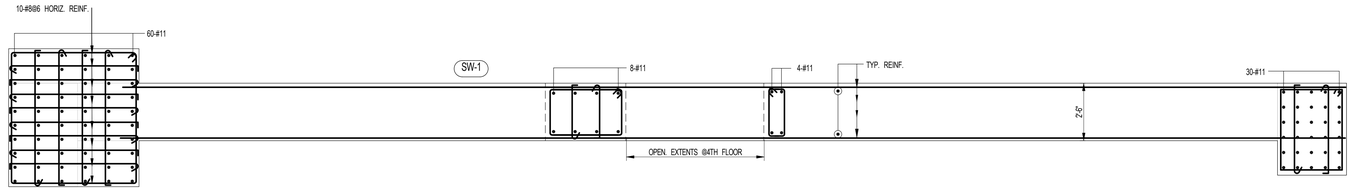

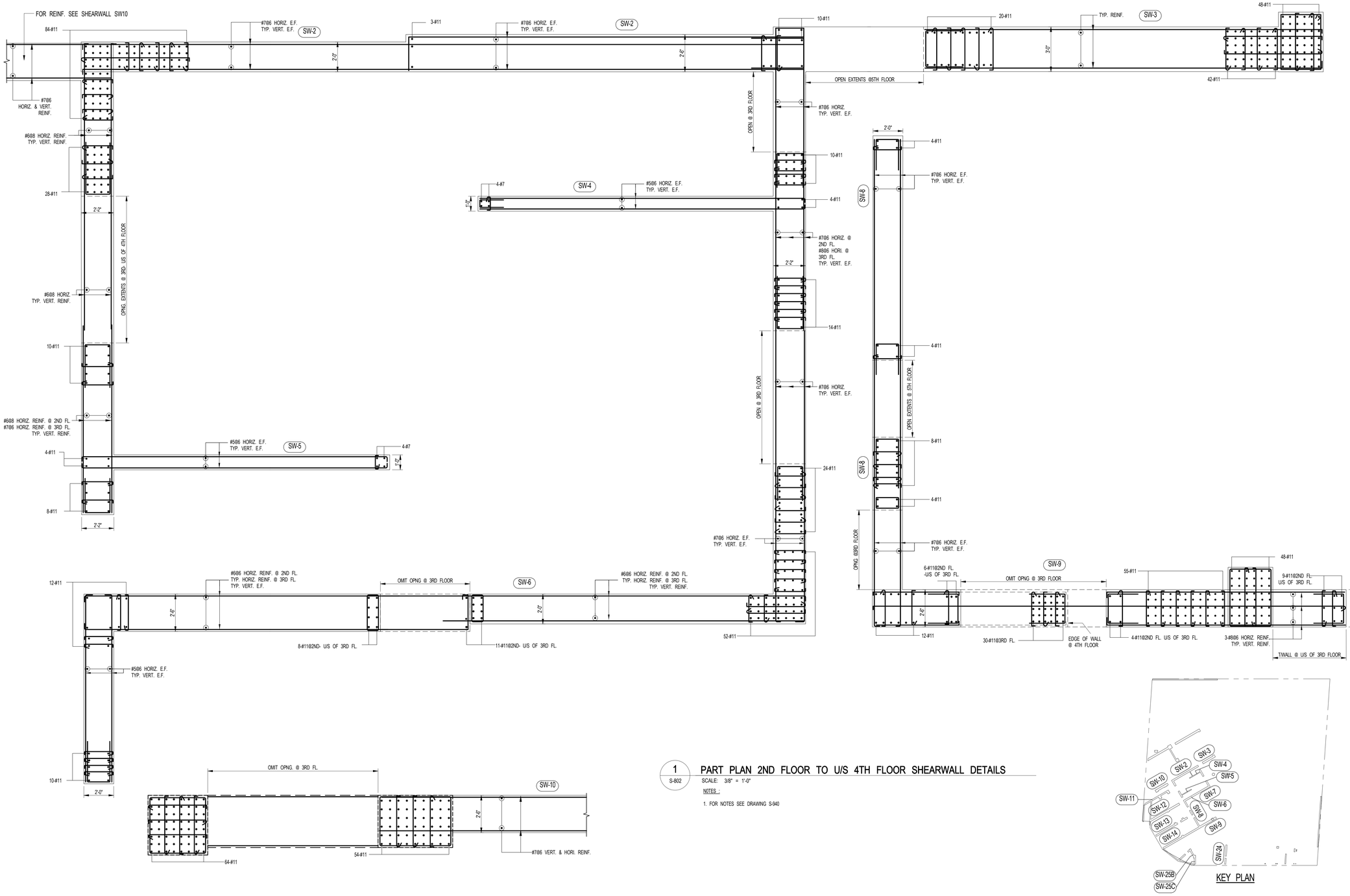

1 S-802 **PART PLAN 2ND FLOOR TO U/S 4TH FLOOR SHEARWALL DETAILS**

SCALE: 3/8" = 1'-0"

NOTES :

1. FOR NOTES SEE DRAWING S-940

KEY PLAN

KEY PLAN:

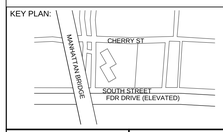

PROJECT NORTH

TRUE NORTH

DEVELOPER:
EXTELL DEVELOPMENT COMPANY
805 Third Ave, 7th Floor
New York, NY 10022
TEL: 212-712-6000 FAX: 212-712-6100

ARCHITECT OF RECORD:
AAI ARCHITECTS, P.C.
14 Wall Street, 2nd Floor
New York, NY 10005
TEL: 212-964-4040 FAX: 212-964-4090

INTERIOR DESIGNER:
MEYER DAVIS
180 Varick St, suite 404
New York, NY 10014
TEL: 212-627-5574

LANDSCAPE DESIGNER:
WEST 8 URBAN DESIGN & LANDSCAPE ARCHITECTURE P.C.
333 Hudson Street, Suite 905
New York, NY 10013
TEL: 212-285-0088 FAX: 212-285-0228

STRUCTURAL ENGINEERS:
WSP
228 East 45th Street
New York, NY 10017
TEL: 212-687-9888 FAX: 646-487-5501

MEP ENGINEERS:
ICOR ASSOCIATES, LLC
485 C Route 1 South, Suite 200
Iseline, NJ 08830
TEL: 908-272-3300 FAX: 908-272-4440

GEOTECHNICAL ENGINEERS:
LANGAN ENGINEERING & ENVIRONMENTAL SERVICES
21 Penn Plaza - 360 West 31st Street, 8th Floor
New York, NY 10001
TEL: 212.479.5400 FAX: 212.479.5444

No.	DESCRIPTION:	DATE:
1	CONCRETE BID PACKAGE	03-06-15
2	ISSUED FOR FILING	03-26-15

Discrepancies must be reported immediately to the Architect before proceeding. Only figured dimensions are to be used. Contractors must check all dimensions on site. This drawing is protected by copyright.

ALL DIMENSIONS ARE SHOWN IN IMPERIAL.

CONSULTANT:
AAI ARCHITECTS, P.C.

PROJECT:
250 SOUTH STREET
NEW YORK, NY

DRAWING TITLE:
2ND FLOOR TO U/S 4TH FLOOR SHEARWALL DETAILS

SEAL & SIGNATURE:

DATE:	03/05/15
PROJECT No:	1302510
DRAWN: CAD	REV:
CHK: CL	
SCALE: As indicated	
DWG No:	**S-802.00**
DOB PAGE No:	of

DOB EMPLOYEE STAMP:

Damian Titus
Buildings
APPROVED
Under Directive 2 of 1975
Date: 05/21/2015:
NYC Development Hub

DOB B-SCAN:

FILE NAME:
PLOT DATE:

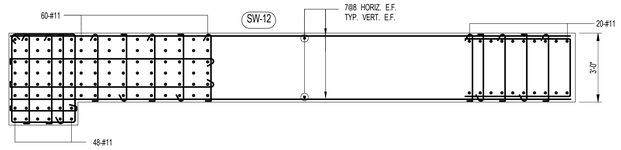

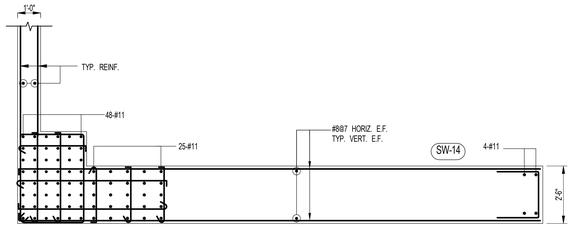

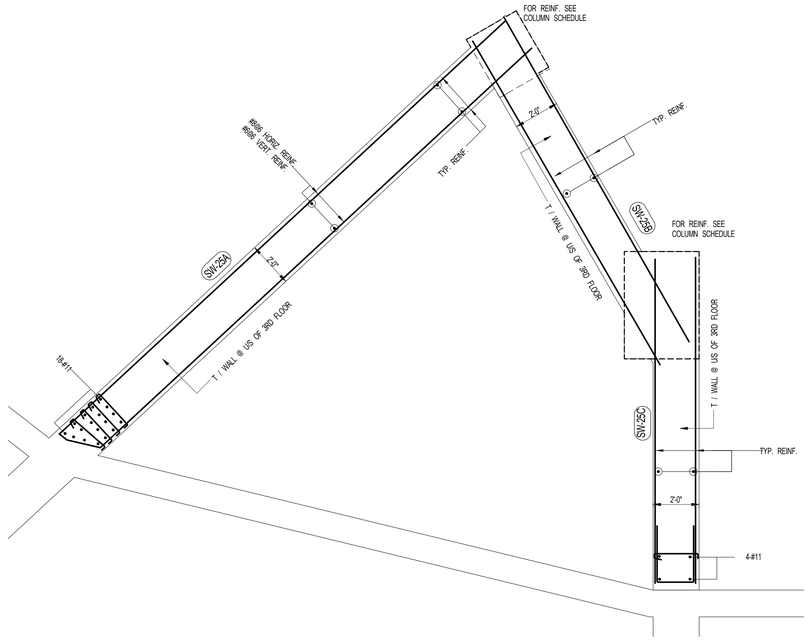

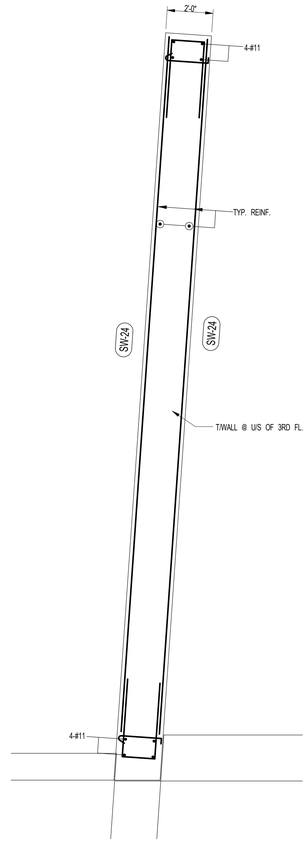

4 S-803 PART PLAN SW24
SCALE: 3/8" = 1'-0"

1 S-803 PART PLAN 2ND FLOOR TO U/S 4TH FLOOR SHEARWALL DETAILS
SCALE: 3/8" = 1'-0"

NOTES :

1. FOR NOTES SEE DRAWING S-940

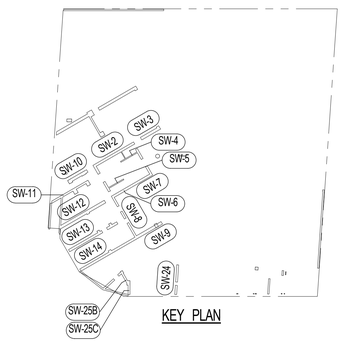

KEY PLAN

KEY PLAN:

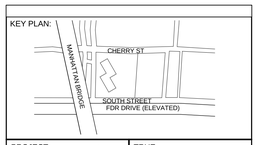

PROJECT NORTH

TRUE NORTH

DEVELOPER:
EXTELL DEVELOPMENT COMPANY
805 Third Ave, 7th Floor
New York, NY 10022
TEL: 212-712-6000 FAX: 212-712-6100

ARCHITECT OF RECORD:
AAI ARCHITECTS, P.C.
14 Wall Street, 2nd Floor
New York, NY 10005
TEL: 212-964-4040 FAX: 212-964-4090

INTERIOR DESIGNER:
MEYER DAVIS
180 Varick St, suite 404
New York, NY 10014
TEL: 212-627-5574

LANDSCAPE DESIGNER:
WEST 8 URBAN DESIGN & LANDSCAPE ARCHITECTURE P.C.
333 Hudson Street, Suite 905
New York, NY 10013
TEL: 212-285-0088 FAX: 212-285-0228

STRUCTURAL ENGINEERS:
WSP
228 East 45th Street
New York, NY 10017
TEL: 212-687-9888 FAX: 646-487-5501

MEP ENGINEERS:
ICOR ASSOCIATES, LLC
485 C Route 1 South, Suite 200
Iseline, NJ 08830
TEL: 908-272-3300 FAX: 908-272-4440

GEOTECHNICAL ENGINEERS:
LANGAN ENGINEERING & ENVIRONMENTAL SERVICES
21 Penn Plaza - 360 West 31st Street, 8th Floor
New York, NY 10001
TEL: 212.479.5400 FAX: 212.479.5444

No.	DESCRIPTION:	DATE:
1	CONCRETE BID PACKAGE	03-06-15
2	ISSUED FOR FILING	03-26-15

Discrepancies must be reported immediately to the Architect before proceeding. Only figured dimensions are to be used. Contractors must check all dimensions on site. This drawing is protected by copyright.

ALL DIMENSIONS ARE SHOWN IN IMPERIAL.

CONSULTANT:
AAI ARCHITECTS, P.C.

PROJECT:
250 SOUTH STREET
NEW YORK, NY

DRAWING TITLE:
2ND FLOOR TO U/S 4TH FLOOR SHEARWALL DETAILS

SEAL & SIGNATURE:
STATE OF NEW YORK · AHMAD RAHIMIAN · No. 085537 · LICENSED PROFESSIONAL ENGINEER

DATE:	03/05/15
PROJECT No:	1302510
DRAWN: CAD	REV:
CHK: CL	
SCALE: As indicated	
DWG No:	S-803.00
DOB PAGE No:	of

DOB EMPLOYEE STAMP:
Damian Titus
Buildings
APPROVED
Under Directive 2 of 1975
Date: 05/21/2015:
NYC Development Hub

DOB B-SCAN:

30" x 42" Arch E1 - SHEET SIZE

FILE NAME:
PLOT DATE:

DEPT OF BLDGS121105039 Job Number
E38423535119 Scan Code

30" x 42" Arch E1 SHEET SIZE

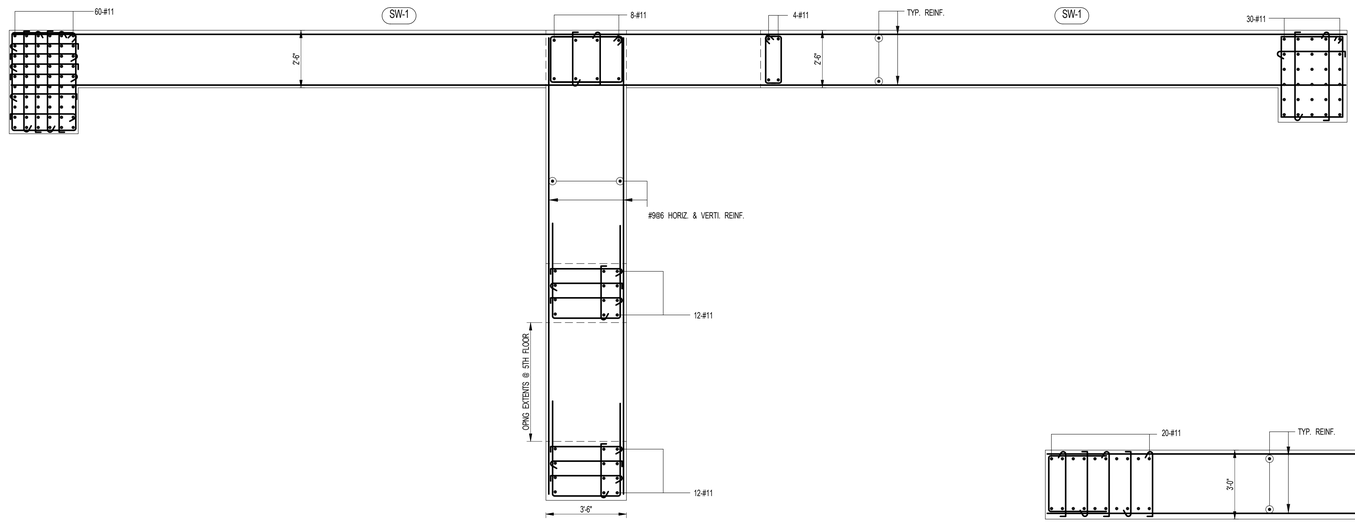

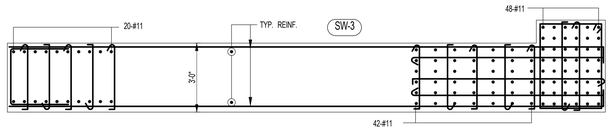

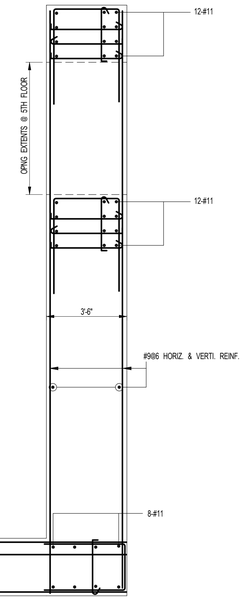

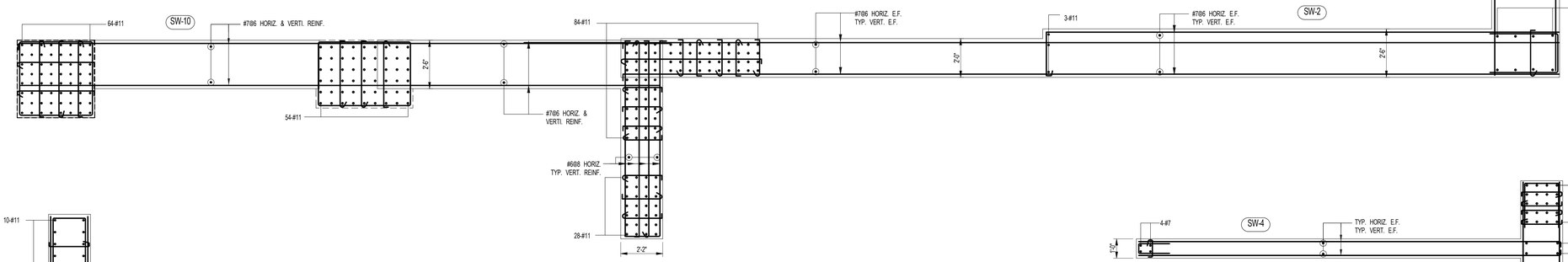

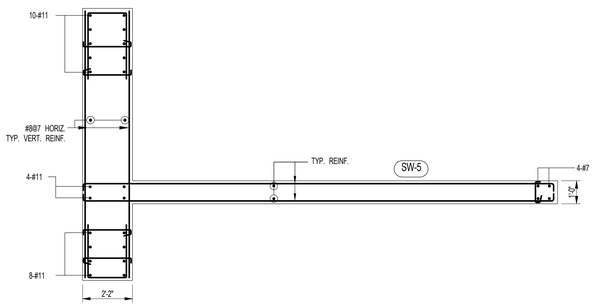

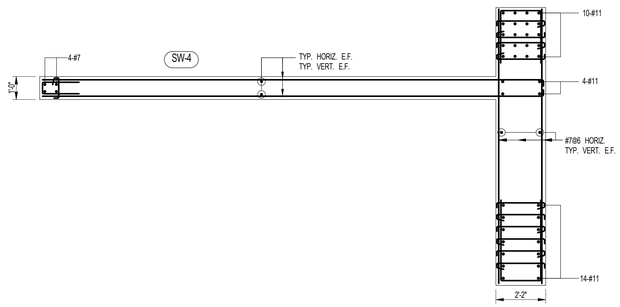

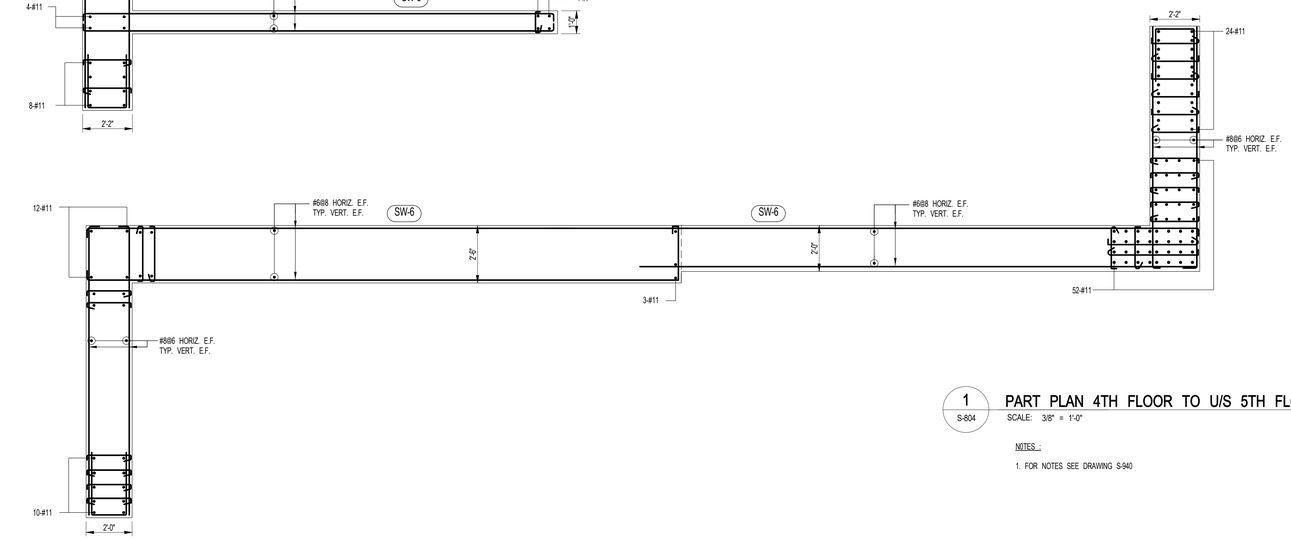

1 S-804 **PART PLAN 4TH FLOOR TO U/S 5TH FLOOR SHEARWALL DETAILS**

SCALE: 3/8" = 1'-0"

NOTES :

1. FOR NOTES SEE DRAWING S-940

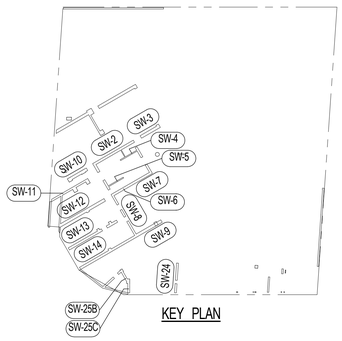

KEY PLAN

KEY PLAN:

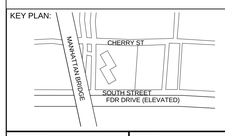

PROJECT NORTH

TRUE NORTH

DEVELOPER:
EXTELL DEVELOPMENT COMPANY
805 Third Ave, 7th Floor
New York, NY 10022
TEL: 212-712-6000 FAX: 212-712-6100

ARCHITECT OF RECORD:
AAI ARCHITECTS, P.C.
14 Wall Street, 2nd Floor
New York, NY 10005
TEL: 212-964-4040 FAX: 212-964-4090

INTERIOR DESIGNER:
MEYER DAVIS
180 Varick St, suite 404
New York, NY 10014
TEL: 212-627-5574

LANDSCAPE DESIGNER:
WEST 8 URBAN DESIGN & LANDSCAPE ARCHITECTURE P.C.
333 Hudson Street, Suite 905
New York, NY 10013
TEL: 212-285-0088 FAX: 212-285-0228

STRUCTURAL ENGINEERS:
WSP
228 East 45th Street
New York, NY 10017
TEL: 212-687-9888 FAX: 646-487-5501

MEP ENGINEERS:
ICOR ASSOCIATES, LLC
485 C Route 1 South, Suite 200
Iseline, NJ 08830
TEL: 908-272-3300 FAX: 908-272-4440

GEOTECHNICAL ENGINEERS:
LANGAN ENGINEERING & ENVIRONMENTAL SERVICES
21 Penn Plaza - 360 West 31st Street, 8th Floor
New York, NY 10001
TEL: 212.479.5400 FAX: 212.479.5444

No.	DESCRIPTION:	DATE:
1	CONCRETE BID PACKAGE	03-06-15
2	ISSUED FOR FILING	03-26-15

Discrepancies must be reported immediately to the Architect before proceeding. Only figured dimensions are to be used. Contractors must check all dimensions on site. This drawing is protected by copyright.

ALL DIMENSIONS ARE SHOWN IN IMPERIAL.

CONSULTANT:
AAI ARCHITECTS, P.C.

PROJECT:
250 SOUTH STREET
NEW YORK, NY

DRAWING TITLE:
4TH FLOOR TO U/S 5TH FLOOR SHEARWALL DETAILS

SEAL & SIGNATURE:
STATE OF NEW YORK · AHMAD RAHIMIAN · 085557 · LICENSED PROFESSIONAL ENGINEER

DATE:	03/05/15
PROJECT No:	1302510
DRAWN: CAD	REV:
CHK: CL	
SCALE: As indicated	
DWG No:	**S-804**
DOB PAGE No:	of

DOB EMPLOYEE STAMP:
Damian Titus
NYC Buildings
APPROVED
Under Directive 2 of 1975
Date: 05/21/2015
NYC Development Hub

DOB B-SCAN:

FILE NAME:
PLOT DATE:

DEPT OF BLDGS121105529 Job Number
E:5697184611 Scan Code
30" x 42" Anti El. SHEET SIZE

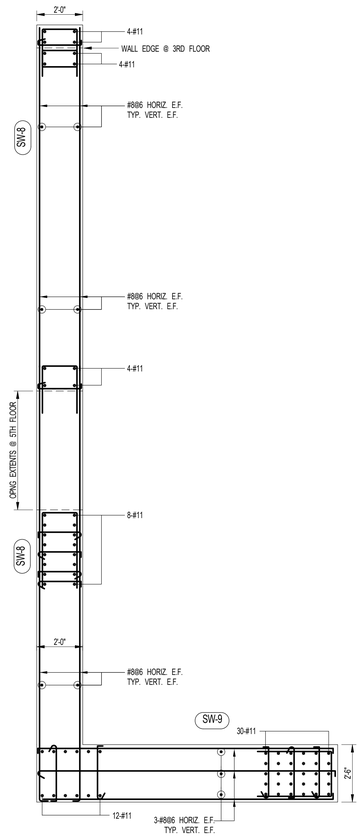

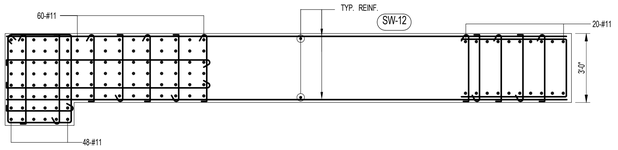

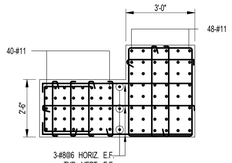

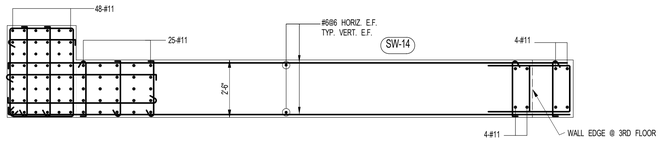

1 S-805 PART PLAN 4TH FLOOR TO U/S 5TH FLOOR SHEARWALL DETAILS

SCALE: 3/8" = 1'-0"

NOTES :

1. FOR NOTES SEE DRAWING S-940

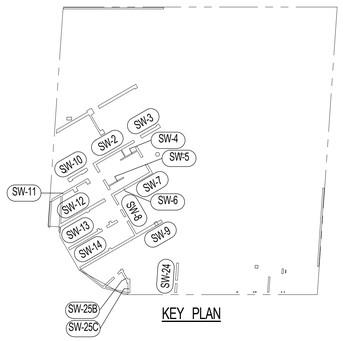

KEY PLAN

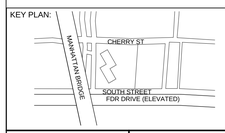

KEY PLAN:

PROJECT NORTH

TRUE NORTH

DEVELOPER:
EXTELL DEVELOPMENT COMPANY
805 Third Ave, 7th Floor
New York, NY 10022
TEL: 212-712-6000 FAX: 212-712-6100

ARCHITECT OF RECORD:
AAI ARCHITECTS, P.C.
14 Wall Street, 2nd Floor
New York, NY 10005
TEL: 212-964-4040 FAX: 212-964-4090

INTERIOR DESIGNER:
MEYER DAVIS
180 Varick St, suite 404
New York, NY 10014
TEL: 212-627-5574

LANDSCAPE DESIGNER:
WEST 8 URBAN DESIGN & LANDSCAPE ARCHITECTURE P.C.
333 Hudson Street, Suite 905
New York, NY 10013
TEL: 212-285-0088 FAX: 212-285-0228

STRUCTURAL ENGINEERS:
WSP
228 East 45th Street
New York, NY 10017
TEL: 212-687-9888 FAX: 646-487-5501

MEP ENGINEERS:
ICOR ASSOCIATES, LLC
485 C Route 1 South, Suite 200
Iselin, NJ 08830
TEL: 908-272-3300 FAX: 908-272-4440

GEOTECHNICAL ENGINEERS:
LANGAN ENGINEERING & ENVIRONMENTAL SERVICES
21 Penn Plaza - 360 West 31st Street, 8th Floor
New York, NY 10001
TEL: 212.479.5400 FAX: 212.479.5444

No.	DESCRIPTION:	DATE:
1	CONCRETE BID PACKAGE	03-06-15
2	ISSUED FOR FILING	03-26-15

Discrepancies must be reported immediately to the Architect before proceeding. Only figured dimensions are to be used. Contractors must check all dimensions on site. This drawing is protected by copyright.

ALL DIMENSIONS ARE SHOWN IN IMPERIAL.

CONSULTANT:
AAI ARCHITECTS, P.C.

PROJECT:
250 SOUTH STREET
NEW YORK, NY

DRAWING TITLE:
4TH FLOOR TO U/S 5TH FLOOR SHEARWALL DETAILS

SEAL & SIGNATURE:
STATE OF NEW YORK · AHMAD RAMZAN · No. 085937 · LICENSED PROFESSIONAL ENGINEER

DATE:	03/06/15
PROJECT No:	1302510
DRAWN: CAD	REV:
CHK: CL	
SCALE: As indicated	
DWG No:	**S-805**
DOB PAGE No:	of

DOB EMPLOYEE STAMP:
Damian Titus
Buildings
APPROVED
Under Directive 2 of 1975
Date: 05/21/2015:
NYC Development Hub

DOB B-SCAN:

FILE NAME:
PLOT DATE:

DEPT OF BLDGS121105028 Job Number
E:5991,344195 Scan Code
30" x 42" Arch E1 - SHEET SIZE

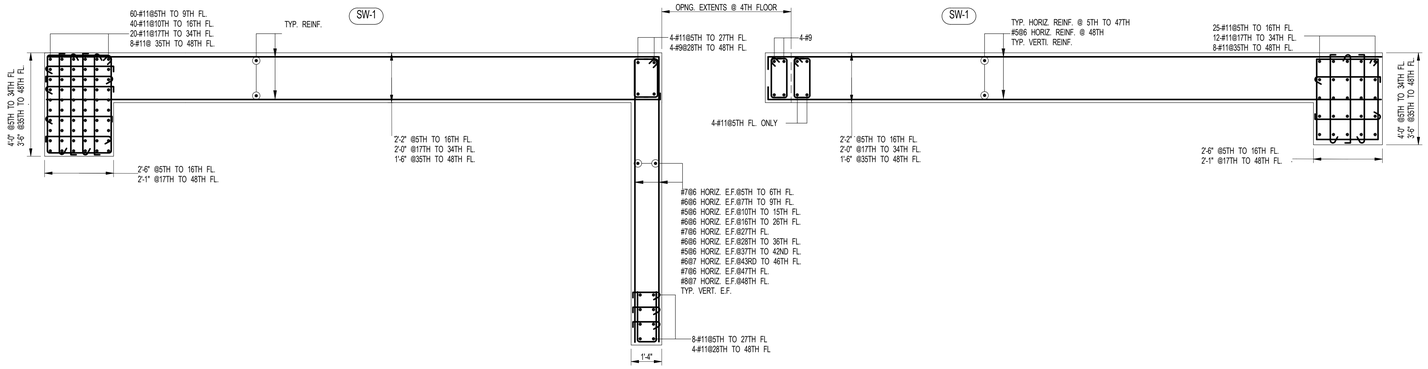

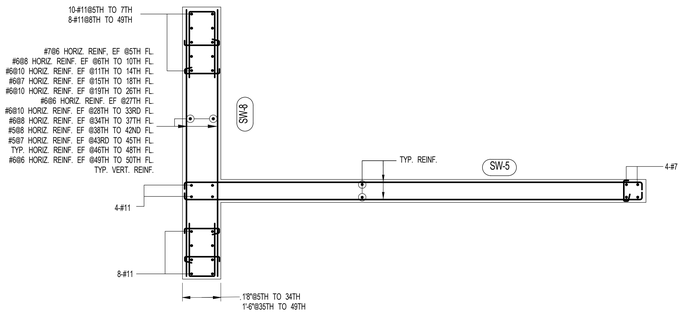

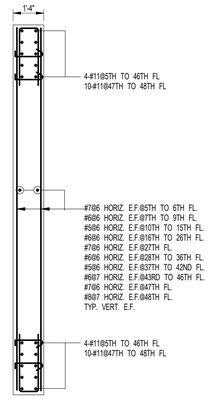

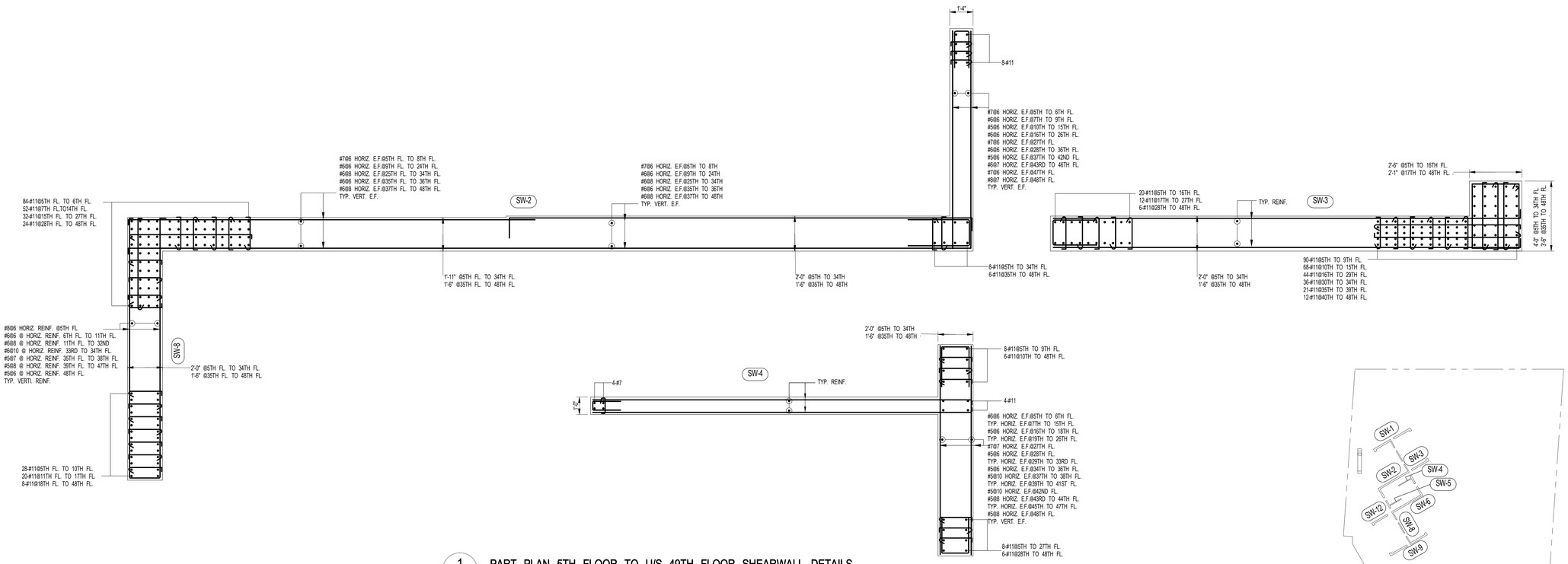

KEY PLAN

1 S-806 PART PLAN 5TH FLOOR TO U/S 49TH FLOOR SHEARWALL DETAILS

SCALE: 3/8" = 1'-0"

NOTES :

1. FOR NOTES SEE DRAWING S-940

OUTRIGGER WALL @ 27TH & 49TH FLOOR NOT SHOWN FOR CLARITY. FOR WALL CONFIGURATION SEE CORRESPONDENCE FRAMING PLAN. FOR REINF. SEE ELEVATIONS.

FILE NAME:
PLOT DATE:

KEY PLAN:

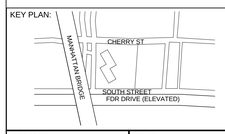

PROJECT NORTH

TRUE NORTH

DEVELOPER:
EXTELL DEVELOPMENT COMPANY
805 Third Ave, 7th Floor
New York, NY 10022
TEL: 212-712-6000 FAX: 212-712-6100

ARCHITECT OF RECORD:
AAI ARCHITECTS, P.C.
14 Wall Street, 2nd Floor
New York, NY 10005
TEL: 212-964-4040 FAX: 212-964-4090

INTERIOR DESIGNER:
MEYER DAVIS
180 Varick St, suite 404
New York, NY 10014
TEL: 212-627-5574

LANDSCAPE DESIGNER:
WEST 8 URBAN DESIGN & LANDSCAPE ARCHITECTURE P.C.
333 Hudson Street, Suite 905
New York, NY 10013
TEL: 212-285-0088 FAX: 212-285-0228

STRUCTURAL ENGINEERS:
WSP
228 East 45th Street
New York, NY 10017
TEL: 212-687-9888 FAX: 646-487-5501

MEP ENGINEERS:
ICOR ASSOCIATES, LLC
485 C Route 1 South, Suite 200
Iseline, NJ 08830
TEL: 908-272-3300 FAX: 908-272-4440

GEOTECHNICAL ENGINEERS:
LANGAN ENGINEERING & ENVIRONMENTAL SERVICES
21 Penn Plaza - 360 West 31st Street, 8th Floor
New York, NY 10001
TEL: 212.479.5400 FAX: 212.479.5444

No.	DESCRIPTION:	DATE:
1	CONCRETE BID PACKAGE	03-06-15
2	ISSUED FOR FILING	03-26-15

Discrepancies must be reported immediately to the Architect before proceeding. Only figured dimensions are to be used. Contractors must check all dimensions on site. This drawing is protected by copyright.

ALL DIMENSIONS ARE SHOWN IN IMPERIAL.

CONSULTANT:
AAI ARCHITECTS, P.C.

PROJECT:
250 SOUTH STREET
NEW YORK, NY

DRAWING TITLE:
5TH FLOOR TO U/S 49TH FLOOR SHEARWALL DETAILS

SEAL & SIGNATURE:

DATE:	03/03/15
PROJECT No:	1302510
DRAWN: CAD	REV:
CHK: CL	
SCALE: As indicated	
DWG No:	**S-806**
DOB PAGE No:	of

DOB EMPLOYEE STAMP:

DOB B-SCAN:

DEPT OF BLDGS121305639 Job Number
E-581417360519 Scan Code
30" x 42" Anti Ei. SHEET SIZE

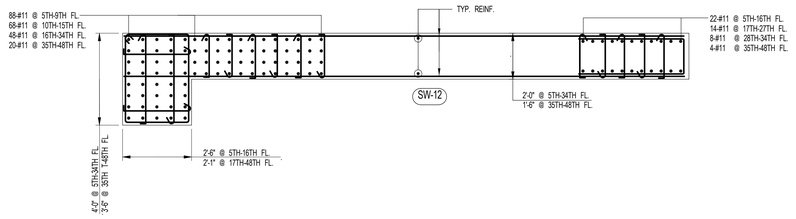

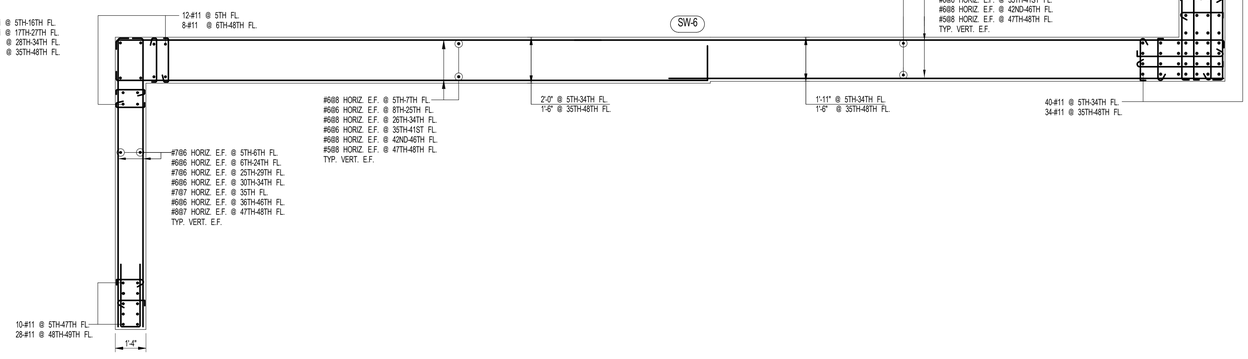

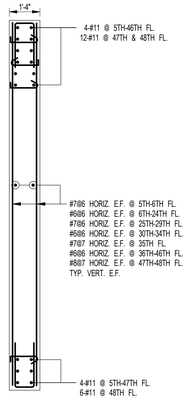

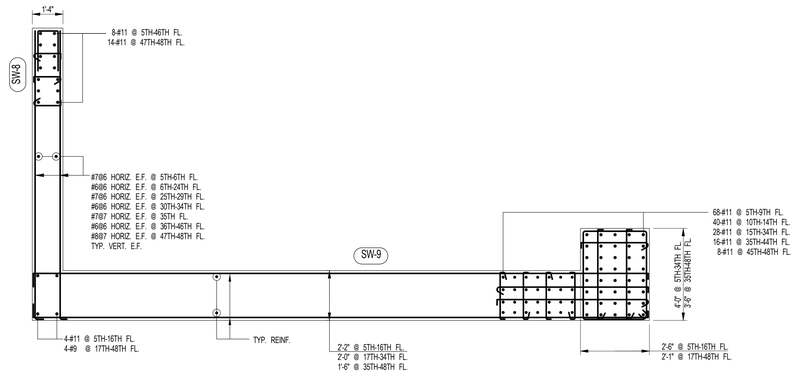

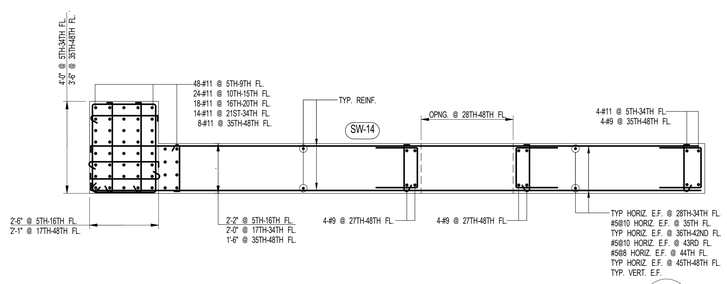

1 S-807 PART PLAN 5TH FLOOR TO U/S 49TH FLOOR SHEARWALL DETAILS

SCALE: 3/8" = 1'-0"

NOTES :

1. FOR NOTES SEE DRAWING S-940

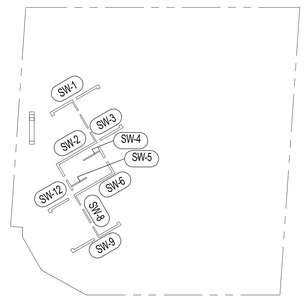

KEY PLAN

KEY PLAN:

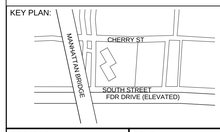

PROJECT NORTH

TRUE NORTH

DEVELOPER:
EXTELL DEVELOPMENT COMPANY
805 Third Ave, 7th Floor
New York, NY 10022
TEL: 212-712-6000 FAX: 212-712-6100

ARCHITECT OF RECORD:
AAI ARCHITECTS, P.C.
14 Wall Street, 2nd Floor
New York, NY 10005
TEL: 212-964-4040 FAX: 212-964-4090

INTERIOR DESIGNER:
MEYER DAVIS
180 Varick St, suite 404
New York, NY 10014
TEL: 212-627-5574

LANDSCAPE DESIGNER:
WEST 8 URBAN DESIGN & LANDSCAPE ARCHITECTURE P.C.
333 Hudson Street, Suite 905
New York, NY 10013
TEL: 212-285-0088 FAX: 212-285-0228

STRUCTURAL ENGINEERS:
WSP
228 East 45th Street
New York, NY 10017
TEL: 212-687-9888 FAX: 646-487-5501

MEP ENGINEERS:
ICOR ASSOCIATES, LLC
485 C Route 1 South, Suite 200
Iseline, NJ 08830
TEL: 908-272-3300 FAX: 908-272-4440

GEOTECHNICAL ENGINEERS:
LANGAN ENGINEERING & ENVIRONMENTAL SERVICES
21 Penn Plaza - 360 West 31st Street, 8th Floor
New York, NY 10001
TEL: 212.479.5400 FAX: 212.479.5444

No.	DESCRIPTION:	DATE:
1	CONCRETE BID PACKAGE	03-06-15
2	ISSUED FOR FILING	03-26-15

Discrepancies must be reported immediately to the Architect before proceeding. Only figured dimensions are to be used. Contractors must check all dimensions on site. This drawing is protected by copyright.

ALL DIMENSIONS ARE SHOWN IN IMPERIAL.

CONSULTANT:
AAI ARCHITECTS, P.C.

PROJECT:
250 SOUTH STREET
NEW YORK, NY

DRAWING TITLE:
5TH FLOOR TO U/S 49TH FLOOR SHEARWALL DETAILS

SEAL & SIGNATURE:

STATE OF NEW YORK · RICHARD RAMELLO · LICENSED PROFESSIONAL ENGINEER · No. 085507

DATE:	03/05/15
PROJECT No:	1302510
DRAWN: CAD	REV:
CHK: CL	
SCALE: As indicated	
DWG No:	**S-807**
DOB PAGE No:	of

DOB EMPLOYEE STAMP:

Damian Titus
Buildings
APPROVED
Under Directive 2 of 1975
Date: 05/21/2015:
NYC Development Hub

DOB B-SCAN:

FILE NAME:
PLOT DATE:

DEPT OF BLDGS121105639 Job Number
E50974658649 Scan Code
30" x 42" Arch E1 SHEET SIZE

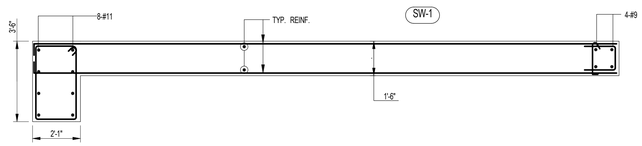

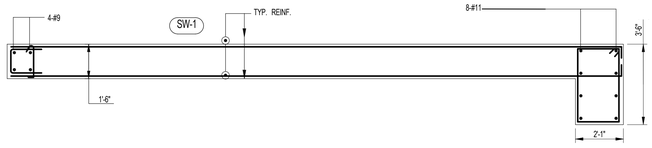

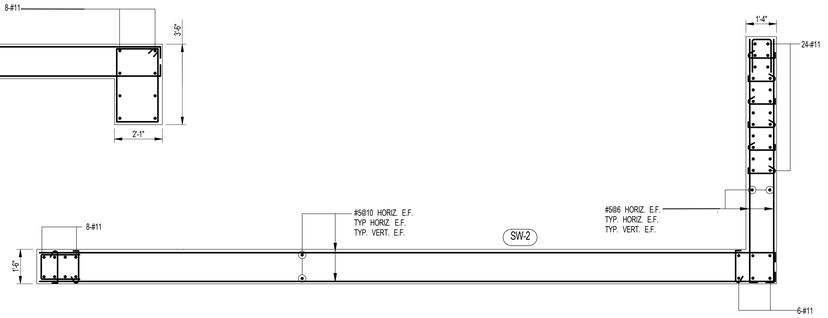

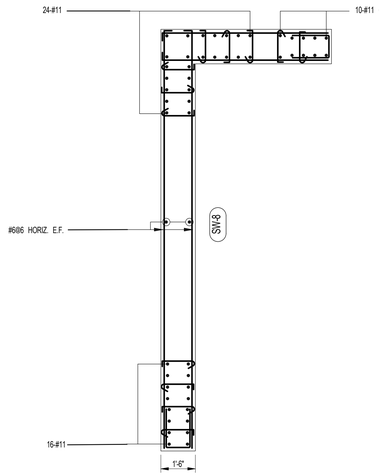

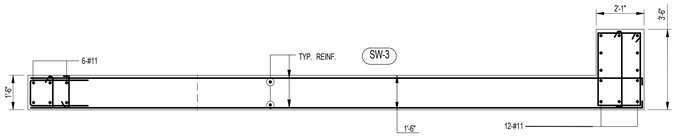

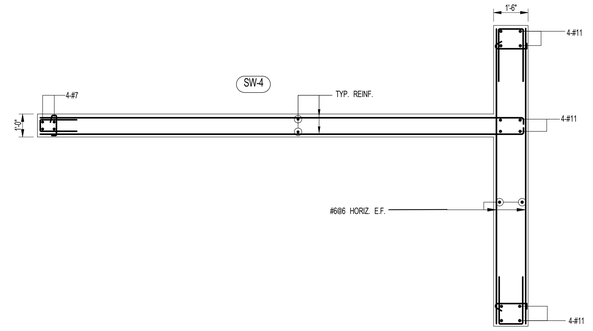

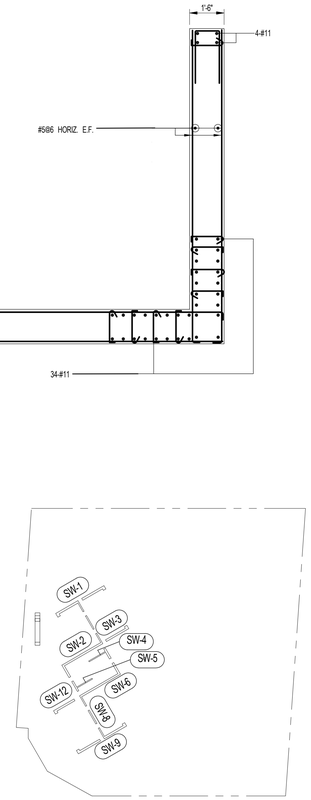

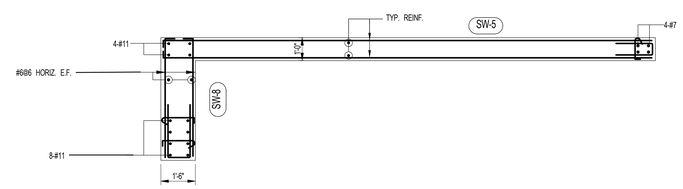

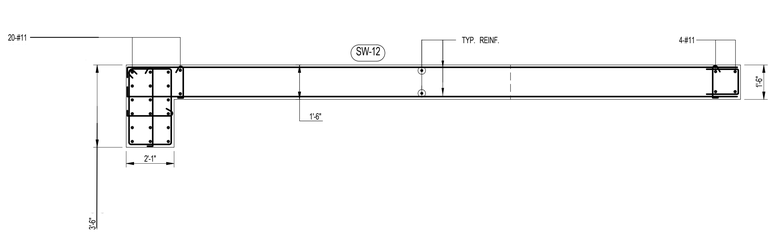

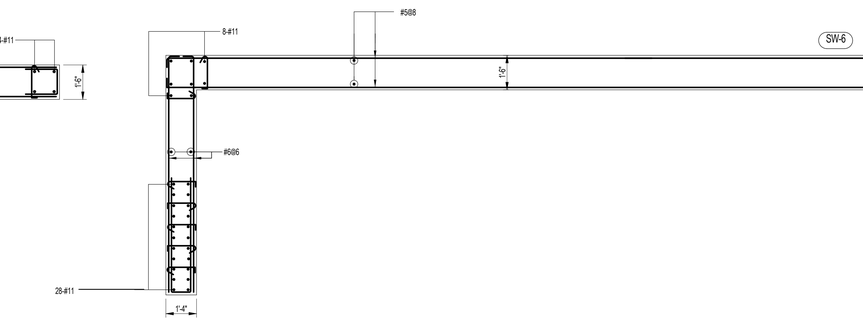

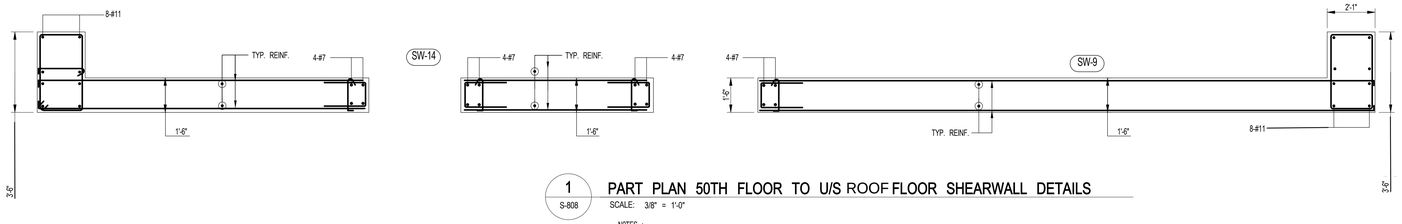

KEY PLAN

1 S-808 PART PLAN 50TH FLOOR TO U/S ROOF FLOOR SHEARWALL DETAILS

SCALE: 3/8" = 1'-0"

NOTES :

1. FOR NOTES SEE DRAWING S-940

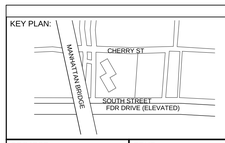

PROJECT NORTH

TRUE NORTH

DEVELOPER:
EXTELL DEVELOPMENT COMPANY
805 Third Ave, 7th Floor
New York, NY 10022
TEL: 212-712-6000 FAX: 212-712-6100

ARCHITECT OF RECORD:
AAI ARCHITECTS, P.C.
14 Wall Street, 2nd Floor
New York, NY 10005
TEL: 212-964-4040 FAX: 212-964-4090

INTERIOR DESIGNER:
MEYER DAVIS
180 Varick St, suite 404
New York, NY 10014
TEL: 212-627-5574

LANDSCAPE DESIGNER:
WEST 8 URBAN DESIGN & LANDSCAPE ARCHITECTURE P.C.
333 Hudson Street, Suite 905
New York, NY 10013
TEL: 212-285-0088 FAX: 212-285-0228

STRUCTURAL ENGINEERS:
WSP
228 East 45th Street
New York, NY 10017
TEL: 212-687-9888 FAX: 646-487-5501

MEP ENGINEERS:
ICOR ASSOCIATES, LLC
485 C Route 1 South, Suite 200
Iseline, NJ 08830
TEL: 908-272-3300 FAX: 908-272-4440

GEOTECHNICAL ENGINEERS:
LANGAN ENGINEERING & ENVIRONMENTAL SERVICES
21 Penn Plaza - 360 West 31st Street, 8th Floor
New York, NY 10001
TEL: 212.479.5400 FAX: 212.479.5444

No.	DESCRIPTION:	DATE:
1	CONCRETE BID PACKAGE	03-06-15
2	ISSUED FOR FILING	03-26-15

Discrepancies must be reported immediately to the Architect before proceeding. Only figured dimensions are to be used. Contractors must check all dimensions on site. This drawing is protected by copyright.

ALL DIMENSIONS ARE SHOWN IN IMPERIAL.

CONSULTANT: AAI ARCHITECTS, P.C.

PROJECT:
250 SOUTH STREET
NEW YORK, NY

DRAWING TITLE:
50TH FLOOR TO U/S ROOF FLOOR SHEARWALL DETAILS

SEAL & SIGNATURE: STATE OF NEW YORK · HAMED RAMHANI · No. 085637 · LICENSED PROFESSIONAL ENGINEER

DATE:	03/09/15
PROJECT No:	1302510
DRAWN: CAD	REV:
CHK: CL	
SCALE: As indicated	
DWG No:	S-808
DOB PAGE No:	of

DOB EMPLOYEE STAMP: Damian Titus — Buildings — APPROVED Under Directive 2 of 1975 Date: 05/21/2015: NYC Development Hub

DOB B-SCAN:

FILE NAME:
PLOT DATE:

DEPT OF BLDGS121185569 Job Number
E58351737F2 Scan Code

30" x 42" Arch E1 - SHEET SIZE

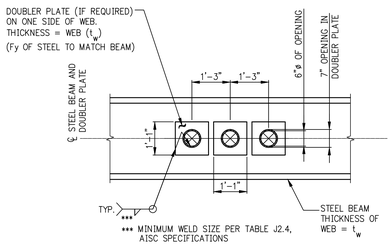

STEEL LINK BEAM WEB OPENING TYPE 1

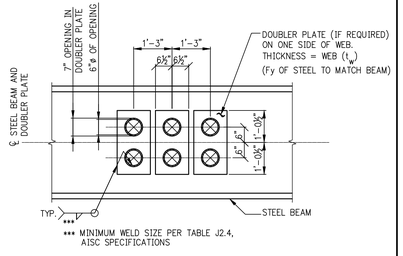

STEEL LINK BEAM WEB OPENING TYPE 2

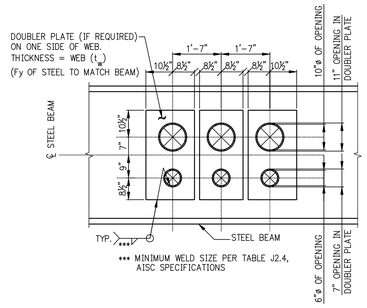

STEEL LINK BEAM WEB OPENING TYPE 3

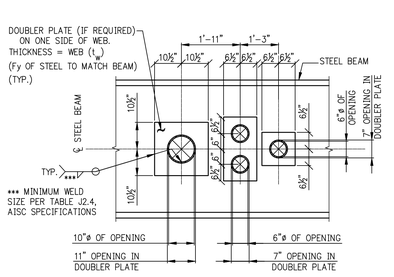

STEEL LINK BEAM WEB OPENING TYPE 4

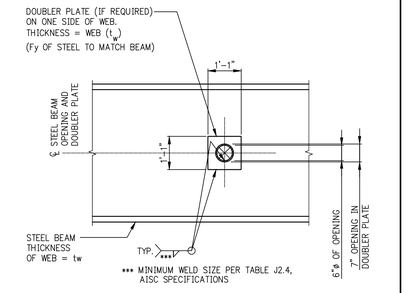

STEEL LINK BEAM WEB OPENING TYPE 5

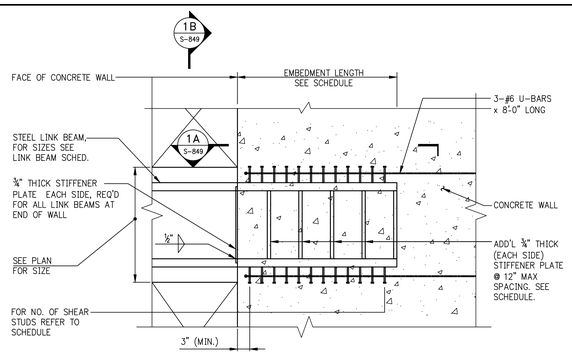

TYPICAL STEEL LINK BEAM EMBEDMENT DETAIL

NOTES:
1. ALL STUDS SHALL BE A108 ⅞"ø
2. Fu = 65ksi

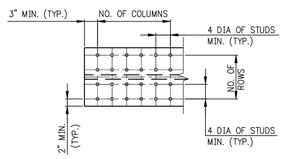

1A S-849 PLAN VIEW

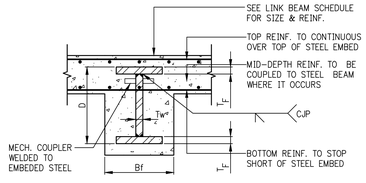

1B S-849 BUILT-UP STEEL LINK BEAM DETAIL
SCALE: N.T.S.
NOTE:
1. PLATES SHALL BE A572 GR. 50 (Fy=50 KSI)

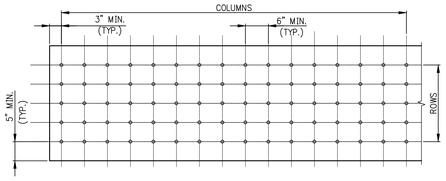

1C S-849 STUD LOCATION FOR STEEL PLATE

NOTE:
1. STUDS ON PLATES SHOULD HAVE LENGTH EQUAL TO 5 DIA. OF STUDS.

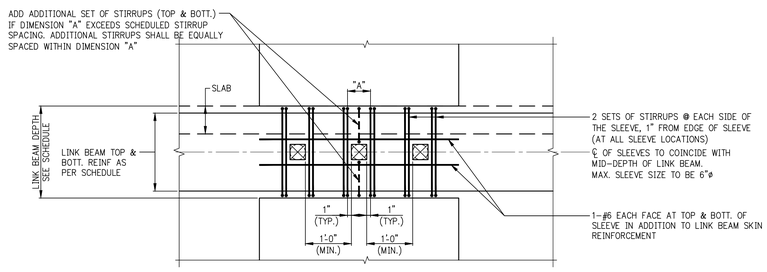

ELEVATION – TYPICAL SLEEVE PENETRATION DETAIL THROUGH LINK BEAMS

NOTES:
1. ALL SCHEDULED BEAM REINFORCEMENT (NOT SHOWN) IS TO BE CONTINUOUS
2. FOR 2 OR MORE SLEEVES, ALL SLEEVES SHALL BE POSITIONED & ALIGNED HORIZONTALLY AS INDICATED ON THE TYPICAL DETAIL.
3. SLEEVE PENETRATIONS THAT DO NOT SATISFY THE REQUIREMENTS OF THIS DETAIL ARE NOT PERMITTED UNLESS REVIEWED AND APPROVED BY THE ENGINEER OF RECORD IN ADVANCE OF CONSTRUCTION.

KEY PLAN:

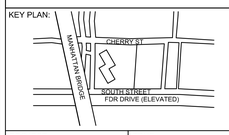

PROJECT NORTH | TRUE NORTH

DEVELOPER:
EXTELL DEVELOPMENT COMPANY
805 Third Ave, 7th Floor
New York, NY 10022
TEL: 212-712-6000 FAX: 212-712-6100

ARCHITECT OF RECORD:
AAI ARCHITECTS, P.C.
14 Wall Street, 2nd Floor
New York, NY 10005
TEL: 212-964-4040 FAX: 212-964-4090

INTERIOR DESIGNER:
MEYER DAVIS
180 Varick St, suite 404
New York, NY 10014
TEL: 212-627-5574

LANDSCAPE DESIGNER:
WEST 8 URBAN DESIGN & LANDSCAPE ARCHITECTURE P.C.
333 Hudson Street, Suite 905
New York, NY 10013
TEL: 212-285-0088 FAX: 212-285-0228

STRUCTURAL ENGINEERS:
WSP
228 East 45th Street
New York, NY 10017
TEL: 212-687-9888 FAX: 646-487-5501

MEP ENGINEERS:
ICOR ASSOCIATES, LLC
485 C Route 1 South, Suite 200
Iseline, NJ 08830
TEL: 908-272-3300 FAX: 908-272-4440

GEOTECHNICAL ENGINEERS:
LANGAN ENGINEERING & ENVIRONMENTAL SERVICES
21 Penn Plaza - 360 West 31st Street, 8th Floor
New York, NY 10001
TEL: 212.479.5400 FAX: 212.479.5444

No.	DESCRIPTION:	DATE:
1	CONCRETE BID PACKAGE	03-06-15
2	ISSUED FOR FILING	03-26-15

NOT FOR CONSTRUCTION

Discrepancies must be reported immediately to the Architect before proceeding. Only figured dimensions are to be used. Contractors must check all dimensions on site. This drawing is protected by copyright.

ALL DIMENSIONS ARE SHOWN IN IMPERIAL.

CONSULTANT: AAI ARCHITECTS, P.C.

PROJECT:
250 SOUTH STREET
NEW YORK, NY

DRAWING TITLE:
TYPICAL SHEARWALL DETAILS

SEAL & SIGNATURE:

DATE:	07/25/14
PROJECT No:	1302510
DRAWN: CADD	REV:
CHK: CL	
SCALE: N.T.S.	
DWG No:	**S-849.00**
DOB PAGE No:	of

DOB EMPLOYEE STAMP:

DOB B-SCAN:

FILE NAME:
PLOT DATE:

DEPT OF BLDGS121185539 Job Number
E1318536768O Scan Code
30" x 42" Arch E1 SHEET SIZE

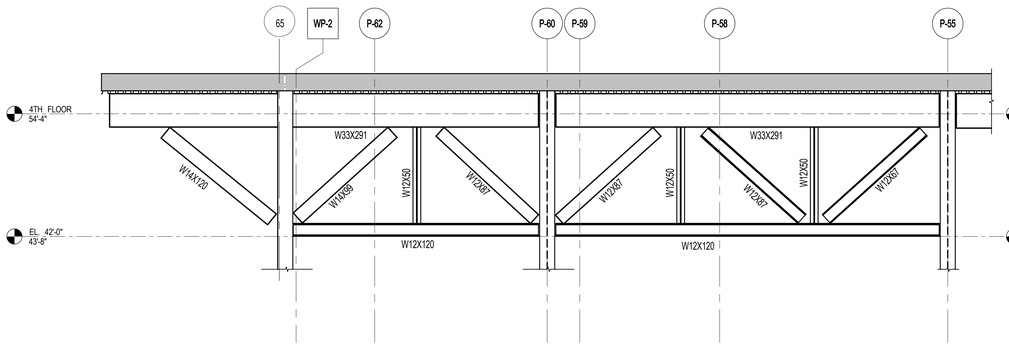

1 S-930 TRUSS 4A - GRIDLINE P-T
SCALE: 3/16" = 1'-0"

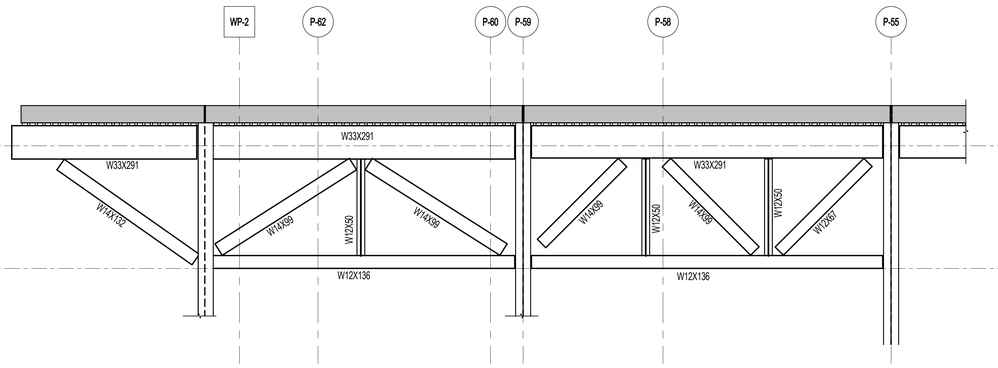

2 S-930 TRUSS 4B - GRIDLINE P-M
SCALE: 3/16" = 1'-0"

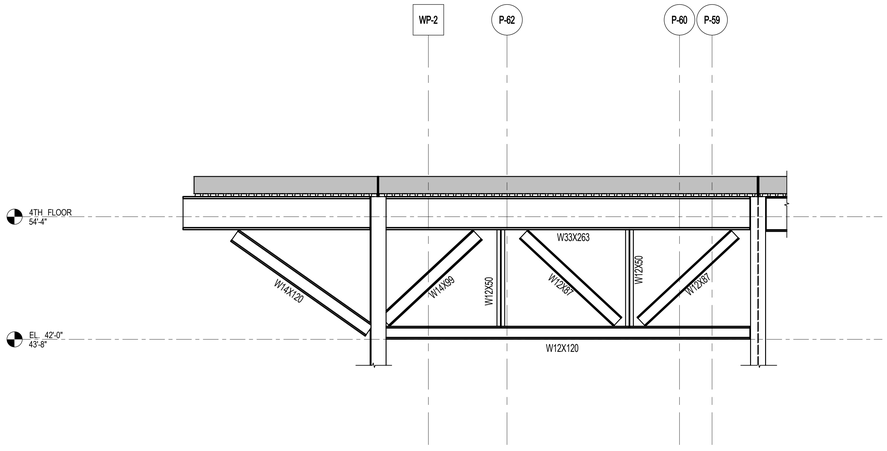

3 S-930 TRUSS 4C - AT GRID LINE P-K
SCALE: 3/16" = 1'-0"

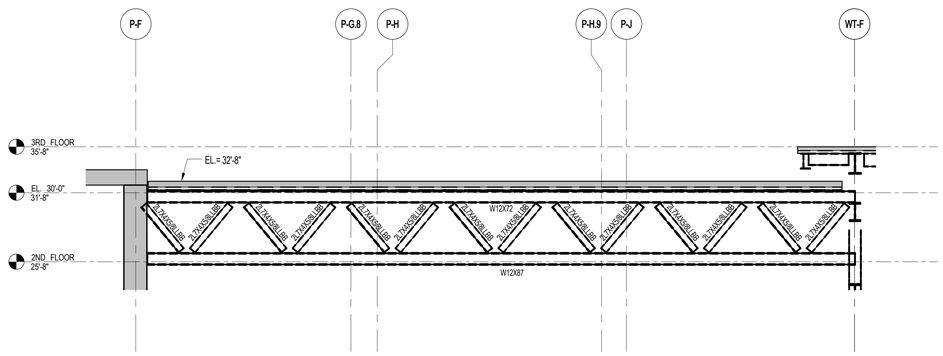

4 S-930 TRUSS SJ
SCALE: 3/16" = 1'-0"

KEY PLAN:

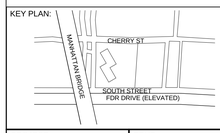

PROJECT NORTH

TRUE NORTH

DEVELOPER:
EXTELL DEVELOPMENT COMPANY
805 Third Ave, 7th Floor
New York, NY 10022
TEL: 212-712-6000 FAX: 212-712-6100

ARCHITECT OF RECORD:
AAI ARCHITECTS, P.C.
14 Wall Street, 2nd Floor
New York, NY 10005
TEL: 212-964-4040 FAX: 212-964-4090

INTERIOR DESIGNER:
MEYER DAVIS
180 Varick St, suite 404
New York, NY 10014
TEL: 212-627-5574

LANDSCAPE DESIGNER:
WEST 8 URBAN DESIGN & LANDSCAPE ARCHITECTURE P.C.
333 Hudson Street, Suite 905
New York, NY 10013
TEL: 212-285-0088 FAX: 212-285-0228

STRUCTURAL ENGINEERS:
WSP
228 East 45th Street
New York, NY 10017
TEL: 212-687-9888 FAX: 646-487-5501

MEP ENGINEERS:
ICOR ASSOCIATES, LLC
485 C Route 1 South, Suite 200
Iseline, NJ 08830
TEL: 908-272-3300 FAX: 908-272-4440

GEOTECHNICAL ENGINEERS:
LANGAN ENGINEERING & ENVIRONMENTAL SERVICES
21 Penn Plaza - 360 West 31st Street, 8th Floor
New York, NY 10001
TEL: 212.479.5400 FAX: 212.479.5444

No.	DESCRIPTION:	DATE:
1	STEEL BID PACKAGE	02-24-15
2	ISSUED FOR FILING	03-26-15

Discrepancies must be reported immediately to the Architect before proceeding. Only figured dimensions are to be used. Contractors must check all dimensions on site. This drawing is protected by copyright.

ALL DIMENSIONS ARE SHOWN IN IMPERIAL.

CONSULTANT:
AAI ARCHITECTS, P.C.

PROJECT:
250 SOUTH STREET
NEW YORK, NY

DRAWING TITLE:
TRUSS ELEVATIONS 1

SEAL & SIGNATURE:
STATE OF NEW YORK · ARMAD RAMNARAN · No. 085603 · LICENSED PROFESSIONAL ENGINEER

DATE:	02/20/15
PROJECT No:	1302510
DRAWN: CAD	REV:
CHK: CL	
SCALE: 3/16" = 1'-0"	
DWG No:	
S-930.00	
DOB PAGE No: of	

DOB EMPLOYEE STAMP:
Damian Titus
Buildings
APPROVED
Under Directive 2 of 1975
Date: 05/21/2015:
NYC Development Hub

DOB B-SCAN:

FILE NAME:
PLOT DATE:

DEPT OF BLDGS121185539 Job Number
ES:3900545 73 Scan Code
30" x 42" Anti El. SHEET SIZE

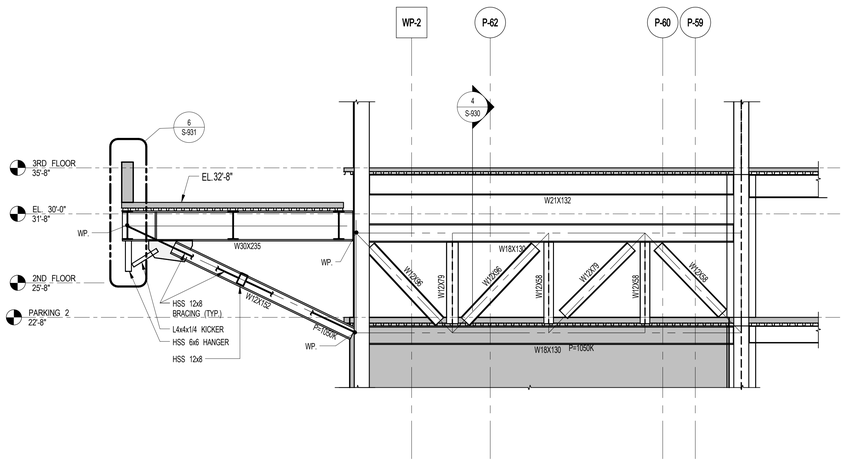

1 S-931 TRUSS 3D - SOUTH CANTILEVER FRAMING AT GRID LINE P-K
SCALE: 3/16" = 1'-0"

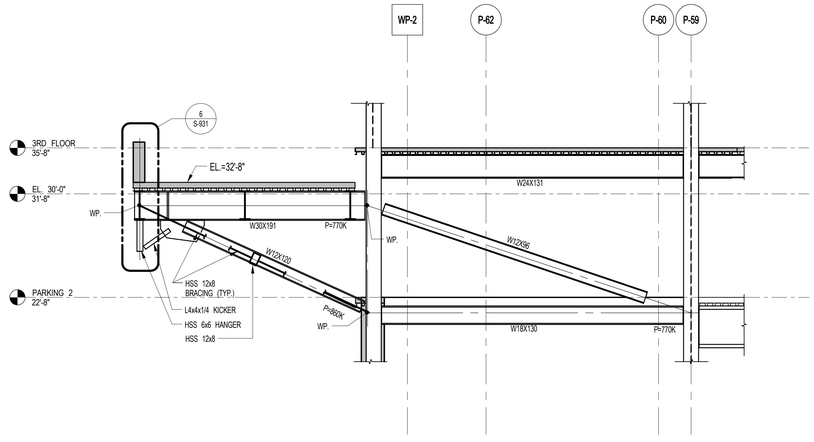

2 S-931 TRUSS 3C - SOUTH CANTILEVER FRAMING AT GRIDLINE P-M
SCALE: 3/16" = 1'-0"

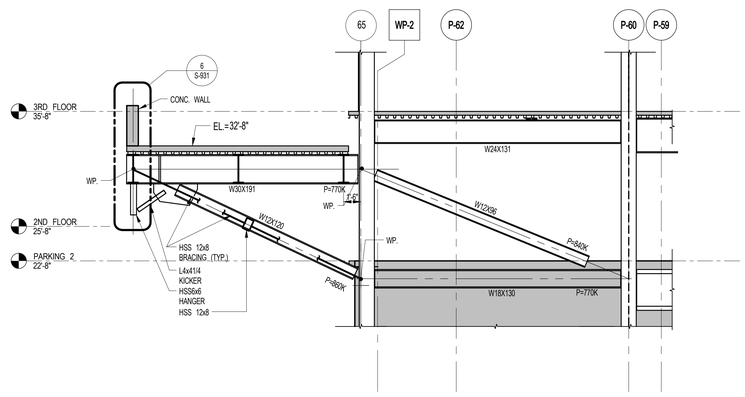

3 S-931 TRUSS 3B - SOUTH CANTILEVER FRAMING AT GRIDLINE P-T
SCALE: 3/16" = 1'-0"

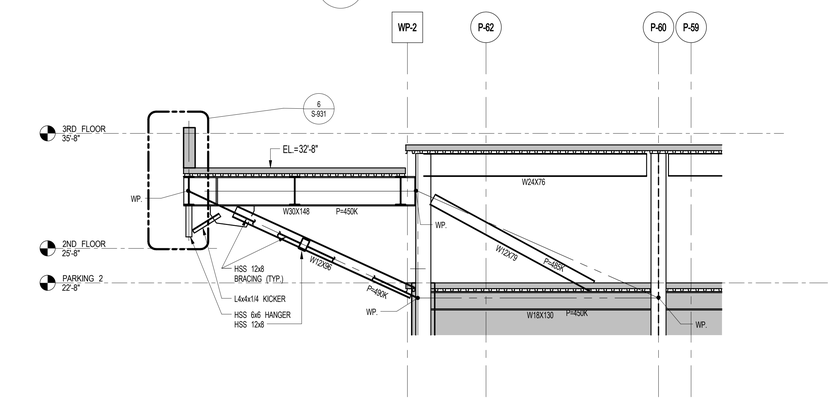

4 S-931 TRUSS 3A - SOUTH CANTILEVER FRAMING AT GRIDLINE P-W
SCALE: 3/16" = 1'-0"

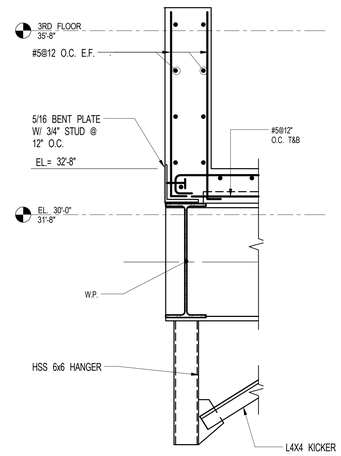

6 S-931 SECTION
SCALE: 3/4" = 1'-0"

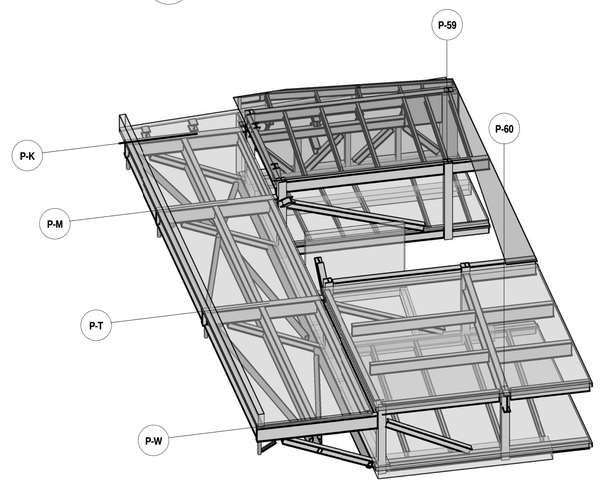

5 S-931 3D VIEW
SCALE:

KEY PLAN:

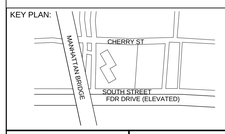

PROJECT NORTH

TRUE NORTH

DEVELOPER:
EXTELL DEVELOPMENT COMPANY
805 Third Ave, 7th Floor
New York, NY 10022
TEL: 212-712-6000 FAX: 212-712-6100

ARCHITECT OF RECORD:
AAI ARCHITECTS, P.C.
14 Wall Street, 2nd Floor
New York, NY 10005
TEL: 212-964-4040 FAX: 212-964-4090

INTERIOR DESIGNER:
MEYER DAVIS
180 Varick St, suite 404
New York, NY 10014
TEL: 212-627-5574

LANDSCAPE DESIGNER:
WEST 8 URBAN DESIGN & LANDSCAPE ARCHITECTURE P.C.
333 Hudson Street, Suite 905
New York, NY 10013
TEL: 212-285-0088 FAX: 212-285-0228

STRUCTURAL ENGINEERS:
WSP
228 East 45th Street
New York, NY 10017
TEL: 212-687-9888 FAX: 646-487-5501

MEP ENGINEERS:
ICOR ASSOCIATES, LLC
485 C Route 1 South, Suite 200
Iseline, NJ 08830
TEL: 908-272-3300 FAX: 908-272-4440

GEOTECHNICAL ENGINEERS:
LANGAN ENGINEERING & ENVIRONMENTAL SERVICES
21 Penn Plaza - 360 West 31st Street, 8th Floor
New York, NY 10001
TEL: 212.479.5400 FAX: 212.479.5444

No.	DESCRIPTION:	DATE:
1	STEEL BID PACKAGE	02-24-15
2	ISSUED FOR FILING	03-26-15

Discrepancies must be reported immediately to the Architect before proceeding. Only figured dimensions are to be used. Contractors must check all dimensions on site. This drawing is protected by copyright.

ALL DIMENSIONS ARE SHOWN IN IMPERIAL.

CONSULTANT:
AAI ARCHITECTS, P.C.

PROJECT:
250 SOUTH STREET
NEW YORK, NY

DRAWING TITLE:
TRUSS ELEVATIONS 2

SEAL & SIGNATURE:

DATE:	02/19/15
PROJECT No:	1302510
DRAWN: CAD	REV:
CHK: CL	
SCALE: As indicated	
DWG No:	**S-931.00**
DOB PAGE No:	of

DOB EMPLOYEE STAMP:

DOB B-SCAN:

FILE NAME:
PLOT DATE:

DEPT OF BLDGS121805639 Job Number
E360587/28056 Scan Code

30" x 42" Anh EL SHEET SIZE

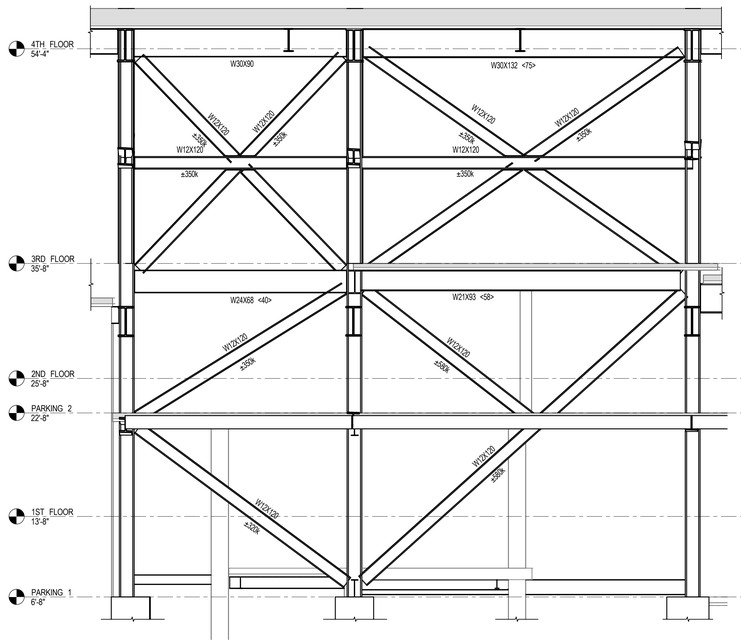

1 S-932 **BRACE BR-1 ELEVATION**
SCALE: 3/16" = 1'-0"

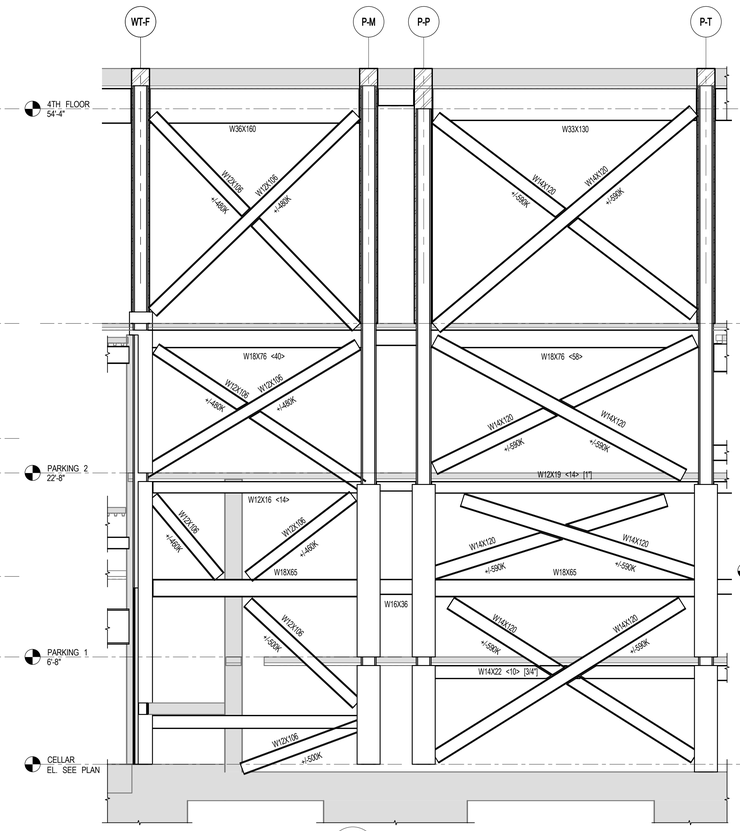

2 S-932 **BRACE BR-2 ELEVATION**
SCALE: 3/16" = 1'-0"

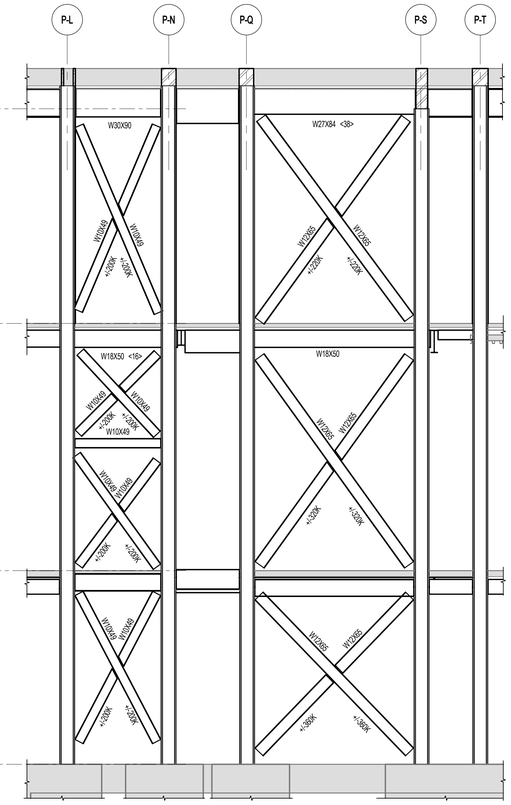

3 S-932 **BRACE BR-3 ELEVATION**
SCALE: 3/16" = 1'-0"

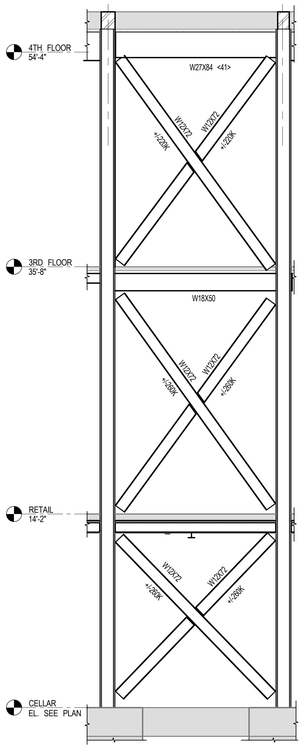

4 S-932 **BRACE BR-4 ELEVATION**
SCALE: 3/16" = 1'-0"

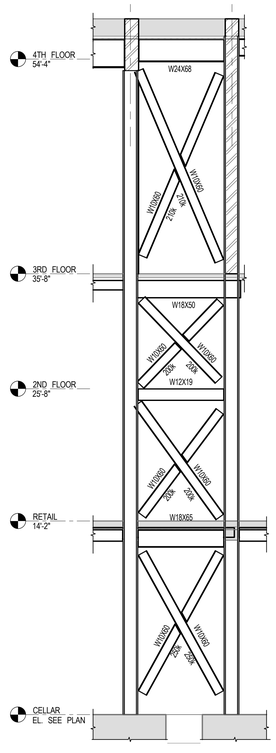

5 S-932 **BRACE BR-5 ELEVATION**
SCALE: 3/16" = 1'-0"

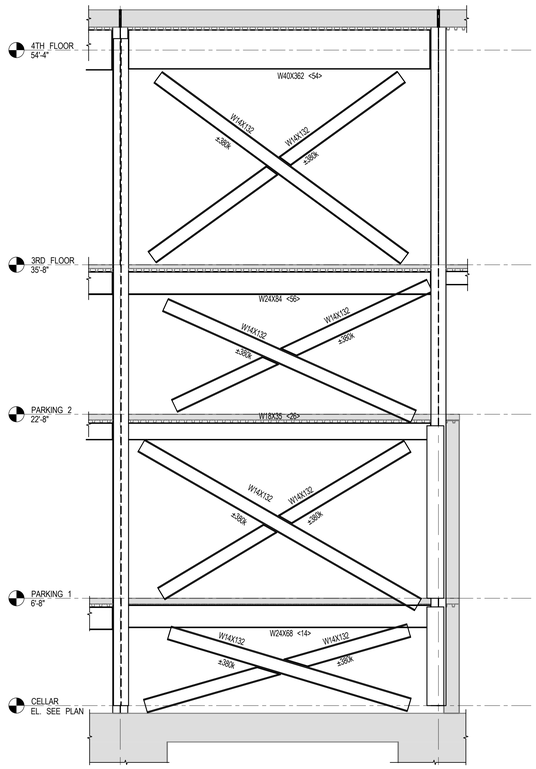

6 S-932 **BRACE BR-6 ELEVATION**
SCALE: 3/16" = 1'-0"

FILE NAME:
PLOT DATE:

KEY PLAN:
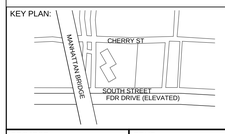

PROJECT NORTH / TRUE NORTH

DEVELOPER:
EXTELL DEVELOPMENT COMPANY
805 Third Ave, 7th Floor
New York, NY 10022
TEL: 212-712-6000 FAX: 212-712-6100

ARCHITECT OF RECORD:
AAI ARCHITECTS, P.C.
14 Wall Street, 2nd Floor
New York, NY 10005
TEL: 212-964-4040 FAX: 212-964-4090

INTERIOR DESIGNER:
MEYER DAVIS
180 Varick St, suite 404
New York, NY 10014
TEL: 212-627-5574

LANDSCAPE DESIGNER:
WEST 8 URBAN DESIGN & LANDSCAPE ARCHITECTURE P.C.
333 Hudson Street, Suite 905
New York, NY 10013
TEL: 212-285-0088 FAX: 212-285-0228

STRUCTURAL ENGINEERS:
WSP
228 East 45th Street
New York, NY 10017
TEL: 212-687-9888 FAX: 646-487-5501

MEP ENGINEERS:
ICOR ASSOCIATES, LLC
485 C Route 1 South, Suite 200
Iseline, NJ 08830
TEL: 908-272-3300 FAX: 908-272-4440

GEOTECHNICAL ENGINEERS:
LANGAN ENGINEERING & ENVIRONMENTAL SERVICES
21 Penn Plaza - 360 West 31st Street, 8th Floor
New York, NY 10001
TEL: 212.479.5400 FAX: 212.479.5444

No.	DESCRIPTION:	DATE:
1	STEEL BID PACKAGE	02-24-15
2	ISSUED FOR FILING	03-26-15

Discrepancies must be reported immediately to the Architect before proceeding. Only figured dimensions are to be used. Contractors must check all dimensions on site. This drawing is protected by copyright.

ALL DIMENSIONS ARE SHOWN IN IMPERIAL.

CONSULTANT:
AAI ARCHITECTS, P.C.

PROJECT:
250 SOUTH STREET
NEW YORK, NY

DRAWING TITLE:
BRACING ELEVATIONS 1

SEAL & SIGNATURE:
STATE OF NEW YORK · ARMAND RAMIREZ · No. 065067 · LICENSED PROFESSIONAL ENGINEER

DATE:	02/24/15
PROJECT No:	1302510
DRAWN: CAD	REV:
CHK: CL	
SCALE: 3/16" = 1'-0"	
DWG No:	**S-932.00**
DOB PAGE No:	of

DOB EMPLOYEE STAMP:
Damian Titus
Buildings
APPROVED
Under Directive 2 of 1975
Date: 05/21/2015:
NYC Development Hub

DOB B-SCAN:

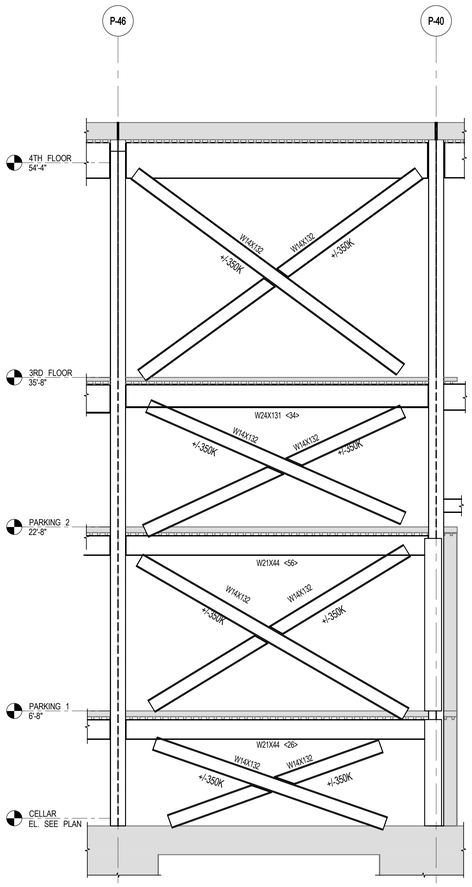

1 S-933 BRACE BR-7 ELEVATION
SCALE: 3/16" = 1'-0"

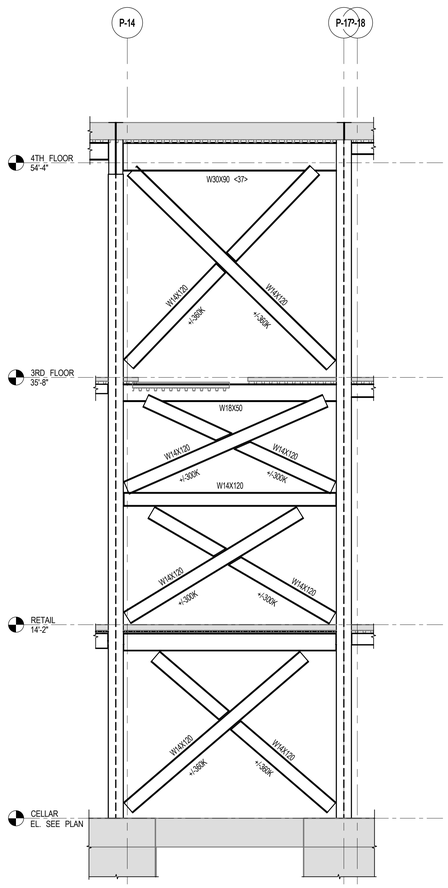

2 S-933 BRACE BR-8 ELEVATION
SCALE: 3/16" = 1'-0"

KEY PLAN:

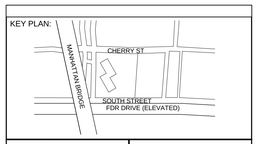

PROJECT NORTH

TRUE NORTH

DEVELOPER:
EXTELL DEVELOPMENT COMPANY
805 Third Ave, 7th Floor
New York, NY 10022
TEL: 212-712-6000 FAX: 212-712-6100

ARCHITECT OF RECORD:
AAI ARCHITECTS, P.C.
14 Wall Street, 2nd Floor
New York, NY 10005
TEL: 212-964-4040 FAX: 212-964-4090

INTERIOR DESIGNER:
MEYER DAVIS
180 Varick St, suite 404
New York, NY 10014
TEL: 212-627-5574

LANDSCAPE DESIGNER:
WEST 8 URBAN DESIGN & LANDSCAPE ARCHITECTURE P.C.
333 Hudson Street, Suite 905
New York, NY 10013
TEL: 212-285-0088 FAX: 212-285-0228

STRUCTURAL ENGINEERS:
WSP
228 East 45th Street
New York, NY 10017
TEL: 212-687-9888 FAX: 646-487-5501

MEP ENGINEERS:
ICOR ASSOCIATES, LLC
485 C Route 1 South, Suite 200
Iseline, NJ 08830
TEL: 908-272-3300 FAX: 908-272-4440

GEOTECHNICAL ENGINEERS:
LANGAN ENGINEERING & ENVIRONMENTAL SERVICES
21 Penn Plaza - 360 West 31st Street, 8th Floor
New York, NY 10001
TEL: 212.479.5400 FAX: 212.479.5444

No.	DESCRIPTION:	DATE:
1	STEEL BID PACKAGE	02-24-15
2	ISSUED FOR FILING	03-26-15

Discrepancies must be reported immediately to the Architect before proceeding. Only figured dimensions are to be used. Contractors must check all dimensions on site. This drawing is protected by copyright.

ALL DIMENSIONS ARE SHOWN IN IMPERIAL.

CONSULTANT:
AAI ARCHITECTS, P.C.

PROJECT:
250 SOUTH STREET
NEW YORK, NY

DRAWING TITLE:
BRACING ELEVATIONS 2

SEAL & SIGNATURE:
STATE OF NEW YORK
AHMAD RAHIMIAN
No. 085537
LICENSED PROFESSIONAL ENGINEER

DATE:	02/24/15
PROJECT No:	1302510
DRAWN: CAD	REV:
CHK: CL	
SCALE: 3/16" = 1'-0"	
DWG No:	S-933.00
DOB PAGE No:	of

DOB EMPLOYEE STAMP:
Damian Titus
Buildings
APPROVED
Under Directive 2 of 1975
Date: 05/21/2015:
NYC Development Hub

DOB B-SCAN:

30" x 42" Arch E1 - SHEET SIZE

FILE NAME:
PLOT DATE:

DEPT OF BLDGS121305529 Job Number
ES9949976135 Scan Code
30" x 42" Arch E1 - SHEET SIZE

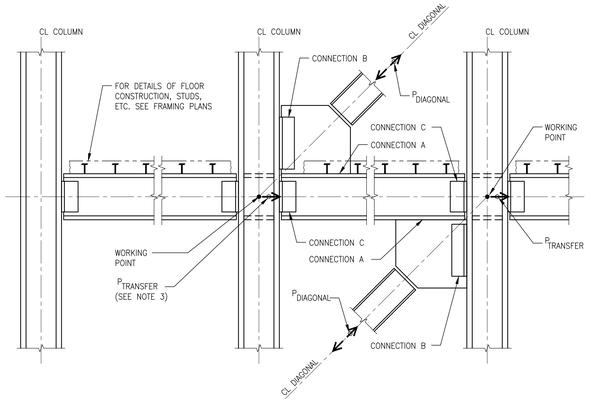

BRACING ELEVATION ILLUSTRATING

WORKING POINTS AND ADDITIONAL FORCES: $P_{TRANSFER}$ & $P_{DIAGONAL}$

NOTE:
SIMPLIFIED ELEVATION, SEE REMAINING DETAILS ON THIS DRAWING FOR ADDITIONAL INFORMATION.

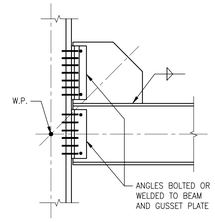

DOUBLE ANGLE CONNECTION TO COLUMN FLANGE

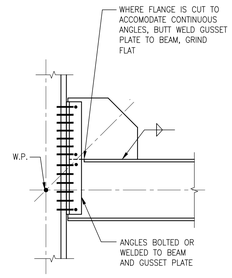

SINGLE LENGTH DOUBLE ANGLE CONNECTION TO COLUMN FLANGE

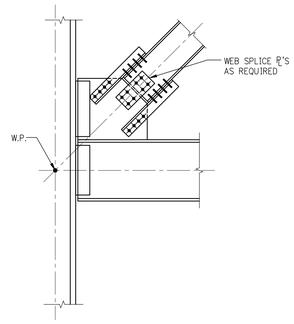

DIAGONAL CONNECTION TO GUSSET PLATE

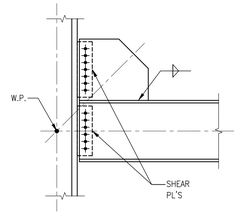

SHEAR PLATE CONNECTION TO COLUMN FLANGE

BEAM/GUSSET PLATE DETAILS AT COLUMN

NOTE:
BRACES NOT SHOWN FOR CLARITY

NOTES:
1. THE UNIFORM FORCE METHOD, AS OUTLINED IN THE MANUAL OF STEEL CONSTRUCTION (LRFD) OF THE AISC, SHALL BE USED IN THE DESIGN OF WIND TRUSS CONNECTIONS:
   A. CONNECTION OF GUSSET PLATE TO BEAM
   B. CONNECTION OF GUSSET PLATE TO COLUMN
   C. CONNECTION OF BEAM TO COLUMN.
2. SEE BRACED FRAME ELEVATIONS IN THE CONTRACT DRAWINGS FOR MEMBER SIZES.
   SEE COLUMN SCHEDULES AND FRAMING PLANS FOR MEMBER SIZES AND/OR ORIENTATIONS NOT SHOWN IN ELEVATIONS.
3. REQUIRED TENSION STRENGTH OF BRACING CONNECTIONS (INCLUDING BEAM TO COLUMN CONNECTIONS IF PART OF THE BRACING SYSTEM) SHALL BE BASED UPON THE FOLLOWING:
   $P_{DIAGONAL} = Ry \times Fy \times Ag$ (ULTIMATE/LRFD LOAD)
   Fy = SPECIFIED BRACE MIN. YIELD STRESS (KSI).
   Ry = AS NOTED IN TABLE I-6-1 OF AISC 341-02.
   Ag = GROSS BRACE AREA (IN²).
4. REQUIRED COMPRESSION STRENGTH OF BRACING CONNECTIONS (INCLUDING BEAM TO COLUMN CONNECTIONS IF PART OF THE BRACING SYSTEM) SHALL BE BASED UPON THE FOLLOWING:
   $P_{DIAGONAL} = F_{cr} \times Ag$
   Fcr = CRITICAL STRESS PER AISC LRFD SPEC.
5. IN ADDITION TO VERTICAL AND HORIZONTAL COMPONENTS DERIVED FROM AXIAL FORCES IN DIAGONALS (P_{DIA}), THE ADDITIONAL FORCE (P_T) IS TO BE INCLUDED IN DESIGN OF CONNECTION, WHERE:
   $P_{TRANSFER}$, THE HORIZONTAL FORCE TRANSFERRING THROUGH A COLUMN FROM ONE SIDE TO THE OTHER AS INDICATED ON FRAMING PLANS. (LRFD LOAD) (TENSION OR COMPRESSION)
6. CONNECT BEAM FLANGES TO COLUMN AS REQUIRED TO TRANSFER FORCES DESCRIBED ABOVE.
7. IN DESIGN OF ALL CONNECTIONS FOR AXIAL FORCES, WHEN THE CONSTROLLING DESIGN AXIAL FORCE IS COMPRESSION, THE CONNECTION SHALL BE DESIGNED TO ALSO PROVIDE A TENSILE CAPACITY OF AT LEAST 50 PER CENT OF THE COMPRESSIVE LOAD.
8. COLUMNS SHALL BE INVESTIGATED FOR $P_{TRANSFER}$ FORCES TO DETERMINE WHETHER STIFFENER PLATES ARE REQUIRED.
9. SLIP-CRITICAL BOLTS USED IN ALL BRACED FRAME CONNECTIONS SHALL BE BASED UPON BOLT VALUES GIVEN IN TABLE 7-4 "SLIP-CRITICAL CONNECTIONS" WHERE "SLIP IS A STRENGTH LIMIT-STATE," CLASS A FAYING SURFACE (13TH EDITION OF AISC MANUAL) (MINIMUM BOLT DIAMETER = 7/8")
10. IF THE FABRICATOR PROPOSES TO USE CLASS B FAYING SURFACE AND A GREATER BOLT CAPACITY THAN TABLE 7-4 VALUES, HE MUST SUBMIT HIS PROPOSED DESIGN AND FABRICATION PROCEDURES TO THE ENGINEER FOR PRIOR APPROVAL.
11. GUSSET PLATE DESIGN SHALL INCLUDE CONSIDERATION OF BUCKLING.
12. THE DETAILS SHOWN ON THIS DWG. ARE TYPICAL DETAILS FOR VARIOUS BRACING CONNECTION CONDITIONS. THE SIZE AND NUMBER OF BOLTS, WELDS, GUSSETS AND PLATES TO BE ENGINEERED AND DETAILED ON SHOP DWG.. BASED ON FORCES AND DESIGN CRITERIA PROVIDED IN S-300 SERIES.

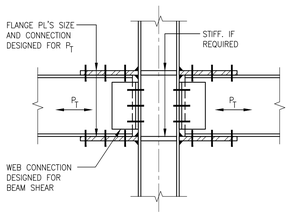

$P_{TRANSFER}$ CONNECTION

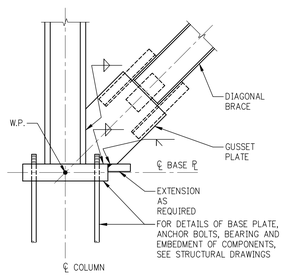

BASE CONNECTION TO COLUMN FLANGE

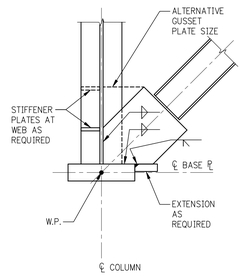

BASE CONNECTION TO COLUMN WEB

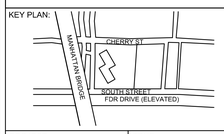

PROJECT NORTH | TRUE NORTH

DEVELOPER:
EXTELL DEVELOPMENT COMPANY
805 Third Ave, 7th Floor
New York, NY 10022
TEL: 212-712-6000 FAX: 212-712-6100

ARCHITECT OF RECORD:
AAI ARCHITECTS, P.C.
14 Wall Street, 2nd Floor
New York, NY 10005
TEL: 212-964-4040 FAX: 212-964-4090

INTERIOR DESIGNER:
MEYER DAVIS
180 Varick St, suite 404
New York, NY 10014
TEL: 212-627-5574

LANDSCAPE DESIGNER:
WEST 8 URBAN DESIGN & LANDSCAPE ARCHITECTURE P.C.
333 Hudson Street, Suite 905
New York, NY 10013
TEL: 212-285-0088 FAX: 212-285-0228

STRUCTURAL ENGINEERS:
WSP
228 East 45th Street
New York, NY 10017
TEL: 212-687-9888 FAX: 646-487-5501

MEP ENGINEERS:
ICOR ASSOCIATES, LLC
485 C Route 1 South, Suite 200
Iselin, NJ 08830
TEL: 908-272-3300 FAX: 908-272-4440

GEOTECHNICAL ENGINEERS:
LANGAN ENGINEERING & ENVIRONMENTAL SERVICES
21 Penn Plaza - 360 West 31st Street, 8th Floor
New York, NY 10001
TEL: 212.479.5400 FAX: 212.479.5444

No.	DESCRIPTION:	DATE:
1	STEEL BID PACKAGE	02-24-15
2	ISSUED FOR FILING	03-26-15

NOT FOR CONSTRUCTION

Discrepancies must be reported immediately to the Architect before proceeding. Only figured dimensions are to be used. Contractors must check all dimensions on site. This drawing is protected by copyright.

ALL DIMENSIONS ARE SHOWN IN IMPERIAL.

CONSULTANT: AAI ARCHITECTS, P.C.

PROJECT:
250 SOUTH STREET
NEW YORK, NY

DRAWING TITLE:
BRACING DETAILS

SEAL & SIGNATURE: STATE OF NEW YORK · AHMAD RAMADAN · No. 086527 · LICENSED PROFESSIONAL ENGINEER

DATE:	07/25/14
PROJECT No:	1302510
DRAWN: CADD	REV:
CHK: CL	
SCALE: N.T.S.	

DWG No:
S-938.00

DOB PAGE No: of

DOB EMPLOYEE STAMP: Damian Titus — Buildings — APPROVED Under Directive 2 of 1975 — Date: 05/21/2015: — NYC Development Hub

DOB B-SCAN:

FILE NAME:
PLOT DATE:

DEPT OF BLDGS121105928 Job Number
E_S940110069 Scan Code
30" x 42" Arch E1 SHEET SIZE

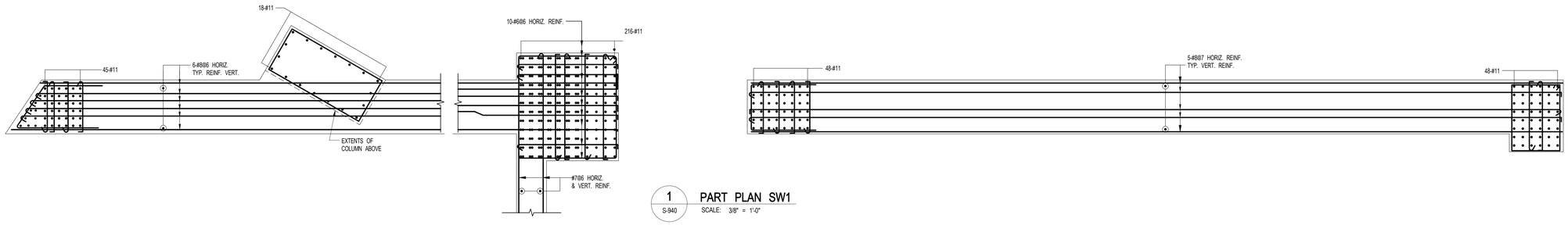

1 S-940 PART PLAN SW1
SCALE: 3/8" = 1'-0"

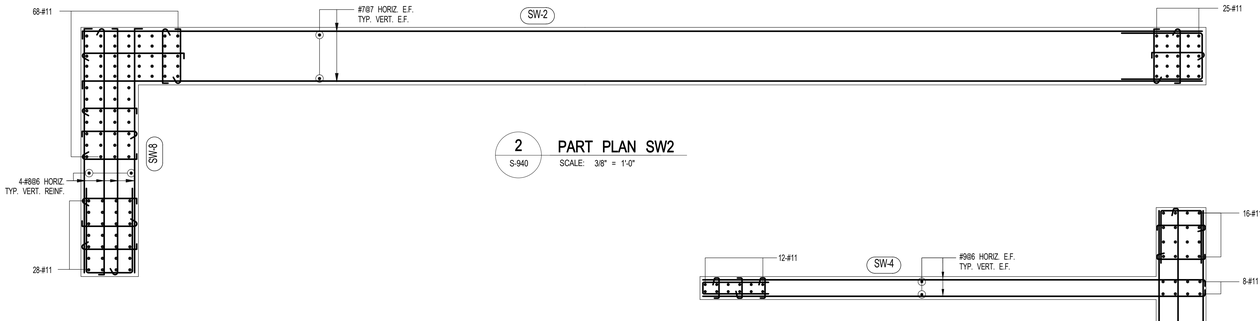

2 S-940 PART PLAN SW2
SCALE: 3/8" = 1'-0"

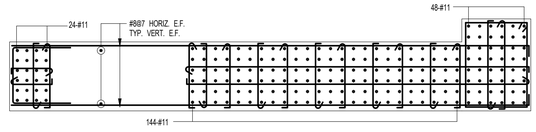

3 S-940 PART PLAN SW3
SCALE: 3/8" = 1'-0"

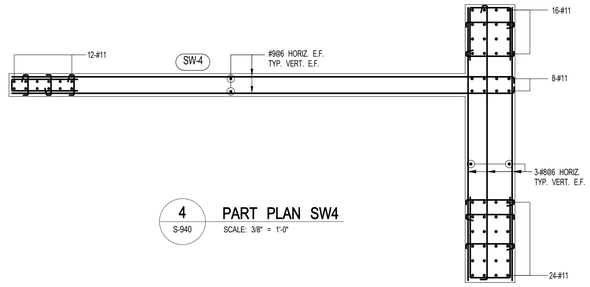

4 S-940 PART PLAN SW4
SCALE: 3/8" = 1'-0"

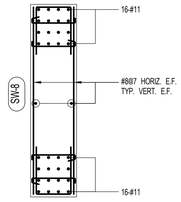

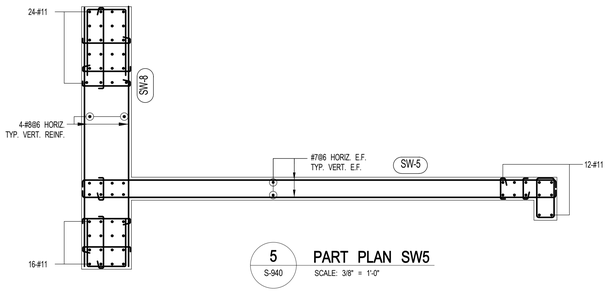

5 S-940 PART PLAN SW5
SCALE: 3/8" = 1'-0"

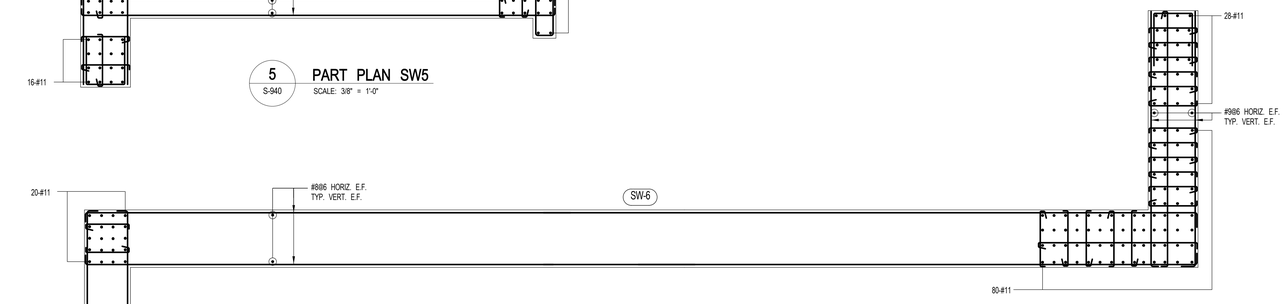

6 S-940 PART PLAN SW6
SCALE: 3/8" = 1'-0"

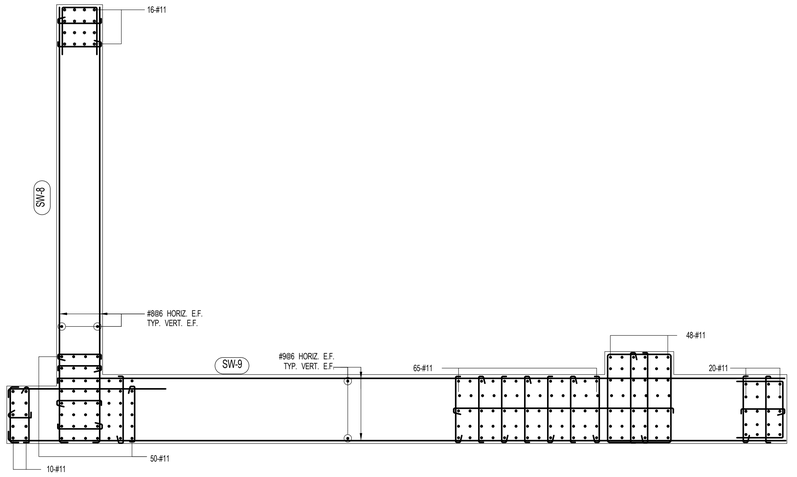

8 S-940 PART PLAN SW9
SCALE: 3/8" = 1'-0"

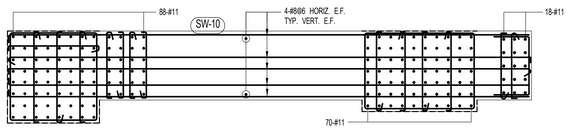

9 S-940 PART PLAN SW10
SCALE: 3/8" = 1'-0"

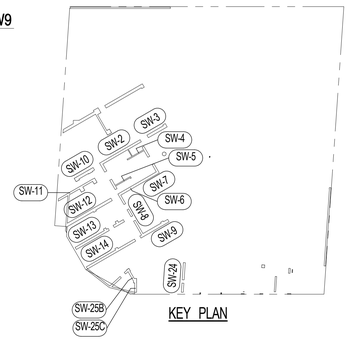

KEY PLAN

KEY PLAN:

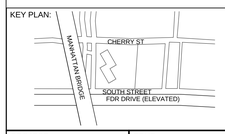

PROJECT NORTH

TRUE NORTH

DEVELOPER:
EXTELL DEVELOPMENT COMPANY
805 Third Ave, 7th Floor
New York, NY 10022
TEL: 212-712-6000 FAX: 212-712-6100

ARCHITECT OF RECORD:
AAI ARCHITECTS, P.C.
14 Wall Street, 2nd Floor
New York, NY 10005
TEL: 212-964-4040 FAX: 212-964-4090

INTERIOR DESIGNER:
MEYER DAVIS
180 Varick St, suite 404
New York, NY 10014
TEL: 212-627-5574

LANDSCAPE DESIGNER:
WEST 8 URBAN DESIGN & LANDSCAPE ARCHITECTURE P.C.
333 Hudson Street, Suite 905
New York, NY 10013
TEL: 212-285-0088 FAX: 212-285-0228

STRUCTURAL ENGINEERS:
WSP
228 East 45th Street
New York, NY 10017
TEL: 212-687-9888 FAX: 646-487-5501

MEP ENGINEERS:
ICOR ASSOCIATES, LLC
485 C Route 1 South, Suite 200
Iseline, NJ 08830
TEL: 908-272-3300 FAX: 908-272-4440

GEOTECHNICAL ENGINEERS:
LANGAN ENGINEERING & ENVIRONMENTAL SERVICES
21 Penn Plaza - 360 West 31st Street, 8th Floor
New York, NY 10001
TEL: 212.479.5400 FAX: 212.479.5444

No.	DESCRIPTION:	DATE:
1	ISSUED FOR FOUNDATION BID	07-25-14
2	50% DD	08-01-14
3	DESIGN DEVELOPMENT	10-07-14
4	ISSUED FOR FOUNDATION BID	01-09-15
5	ISSUED FOR FILING	03-26-15

Discrepancies must be reported immediately to the Architect before proceeding. Only figured dimensions are to be used. Contractors must check all dimensions on site. This drawing is protected by copyright.

ALL DIMENSIONS ARE SHOWN IN IMPERIAL.

CONSULTANT:
AAI ARCHITECTS, P.C.

PROJECT:
250 SOUTH STREET
NEW YORK, NY

DRAWING TITLE:
SHEAR WALL DETAILS 1

SEAL & SIGNATURE:
STATE OF NEW YORK · ARNOLD RAMIREZ · LICENSED PROFESSIONAL ENGINEER · No. 085651

DATE:	07/25/14
PROJECT No:	1302510
DRAWN: CAD	REV:
CHK: CL	
SCALE: As indicated	

DWG No:
S-940.01

DOB PAGE No: of

DOB EMPLOYEE STAMP:
Damian Titus
Buildings
APPROVED
Under Directive 2 of 1975
Date: 05/21/2015:
NYC Development Hub

DOB B-SCAN:

FILE NAME:
PLOT DATE:

DEPT OF BLDGS121105629 Job Number
E1319267904 Scan Code
30" x 42" Arch E1 SHEET SIZE

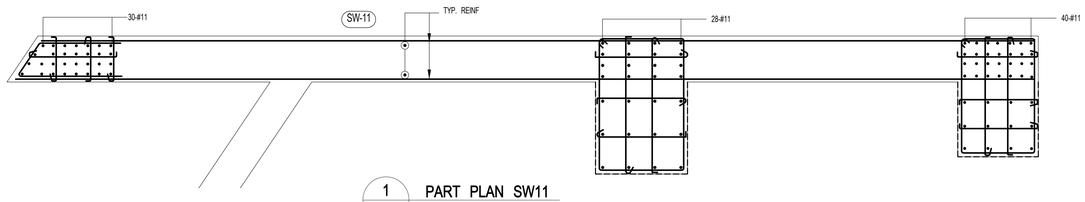

1 S-941 PART PLAN SW11
SCALE: 3/8" = 1'-0"

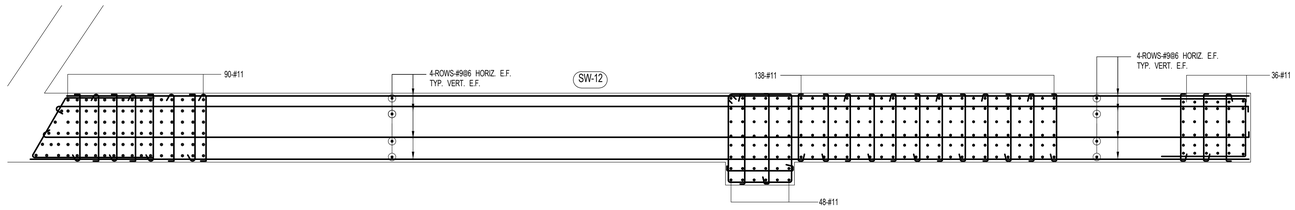

2 S-941 PART PLAN SW12
SCALE: 3/8" = 1'-0"

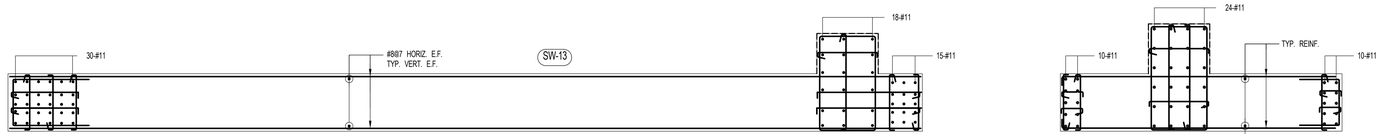

3 S-941 PART PLAN SW13
SCALE: 3/8" = 1'-0"

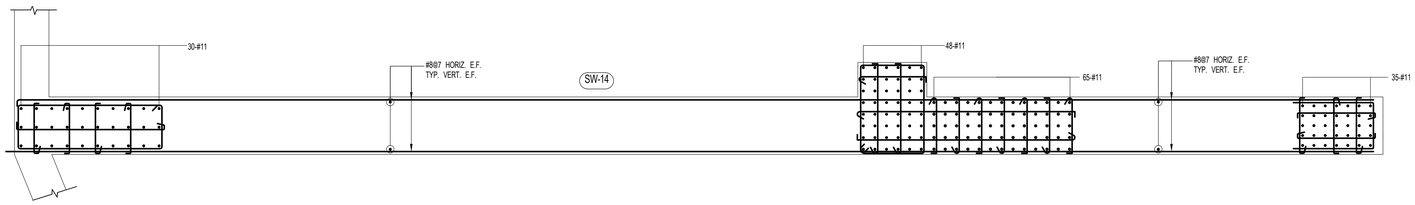

4 S-941 PART PLAN SW14
SCALE: 3/8" = 1'-0"

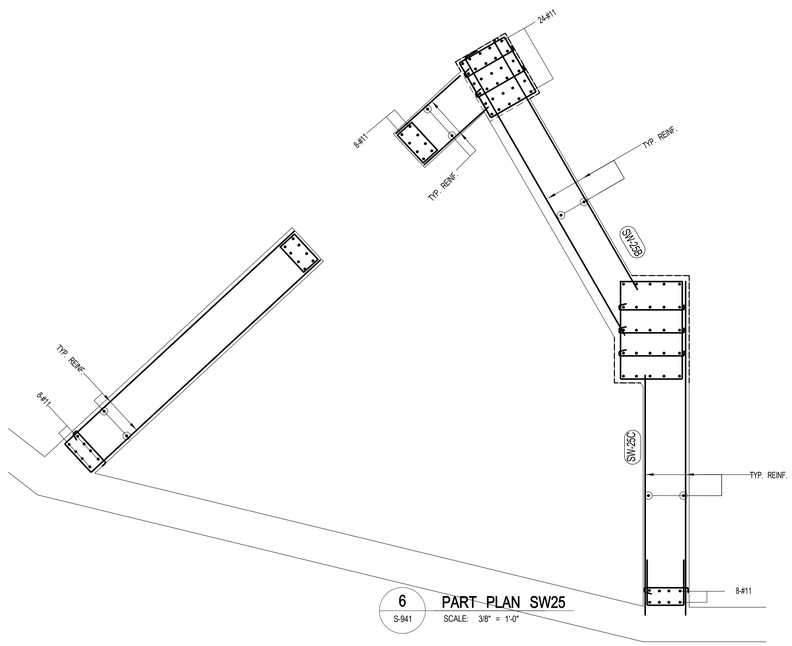

6 S-941 PART PLAN SW25
SCALE: 3/8" = 1'-0"

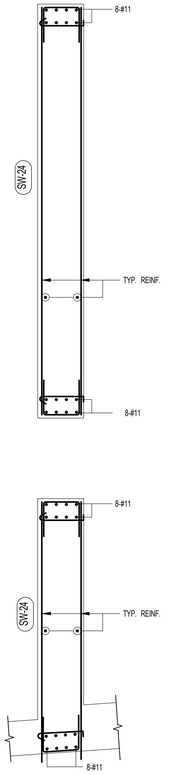

5 S-941 PART PLAN SW24
SCALE: 3/8" = 1'-0"

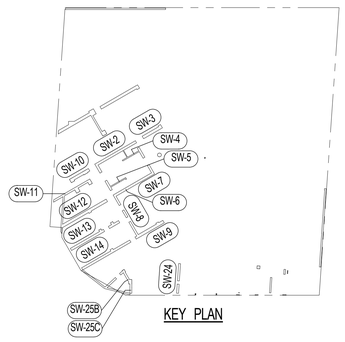

KEY PLAN

KEY PLAN:
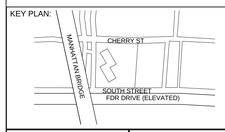

PROJECT NORTH
TRUE NORTH

DEVELOPER:
EXTELL DEVELOPMENT COMPANY
805 Third Ave, 7th Floor
New York, NY 10022
TEL: 212-712-6000 FAX: 212-712-6100

ARCHITECT OF RECORD:
AAI ARCHITECTS, P.C.
14 Wall Street, 2nd Floor
New York, NY 10005
TEL: 212-964-4040 FAX: 212-964-4090

INTERIOR DESIGNER:
MEYER DAVIS
180 Varick St, suite 404
New York, NY 10014
TEL: 212-627-5574

LANDSCAPE DESIGNER:
WEST 8 URBAN DESIGN & LANDSCAPE ARCHITECTURE P.C.
333 Hudson Street, Suite 905
New York, NY 10013
TEL: 212-285-0088 FAX: 212-285-0228

STRUCTURAL ENGINEERS:
WSP
228 East 45th Street
New York, NY 10017
TEL: 212-687-9888 FAX: 646-487-5501

MEP ENGINEERS:
ICOR ASSOCIATES, LLC
485 C Route 1 South, Suite 200
Iseline, NJ 08830
TEL: 908-272-3300 FAX: 908-272-4440

GEOTECHNICAL ENGINEERS:
LANGAN ENGINEERING & ENVIRONMENTAL SERVICES
21 Penn Plaza - 360 West 31st Street, 8th Floor
New York, NY 10001
TEL: 212.479.5400 FAX: 212.479.5444

No.	DESCRIPTION:	DATE:
1	50% DD	08-01-14
2	DESIGN DEVELOPMENT	10-07-14
3	ISSUED FOR FOUNDATION BID	01-09-15
4	ISSUED FOR FILING	03-26-15

Discrepancies must be reported immediately to the Architect before proceeding. Only figured dimensions are to be used. Contractors must check all dimensions on site. This drawing is protected by copyright.

ALL DIMENSIONS ARE SHOWN IN IMPERIAL.

CONSULTANT:
AAI ARCHITECTS, P.C.

PROJECT:
250 SOUTH STREET
NEW YORK, NY

DRAWING TITLE:
SHEAR WALL DETAILS 2

SEAL & SIGNATURE:
STATE OF NEW YORK · RICHARD RAMELLO · LICENSED PROFESSIONAL ENGINEER · No. 065507

DATE:	07/25/14
PROJECT No:	1302510
DRAWN: CAD	REV:
CHK: CL	
SCALE: As indicated	
DWG No:	**S-941.01**
DOB PAGE No:	of

DOB EMPLOYEE STAMP:
Damian Titus
Buildings
APPROVED
Under Directive 2 of 1975
Date: 05/21/2015:
NYC Development Hub

DOB B-SCAN:

FILE NAME:
PLOT DATE:

COLUMN SCHEDULE

FLOOR \ COL. NO.	1	2	3	4	5	6	7	8	9	10	11	12	13	14	15	16	17	18	19	20	21	22	23	24	25	26	27	28	29	30	31	32
CONTINUES	1407	2312	3528	2719	1821	2311	3269	2494	1744	2397	2091	1481	2380	3553	2815	1928	2432	3435	2563	1704	2538	2228	4377	5793	4201	5336	4680	4443	5764	4372	5301	4773
30th FLOOR	1431	2353	3582	2758	1847	2343	3325	2532	1772	2435	2128	1507	2420	3607	2854	1955	2465	3492	2601	1731	2577	2272	4462	5892	4283	5403	4771	4531	5861	4459	5367	4867
29th FLOOR	1456	2395	3636	2798	1873	2376	3381	2572	1800	2473	2165	1533	2462	3660	2894	1983	2498	3550	2641	1759	2616	2316	4546	5991	4366	5469	4862	4618	5958	4547	5433	4961
28th FLOOR	1558	2581	4252	3287	2000	2656	3648	2976	1966	2609	2225	1639	2720	4053	3440	2272	2868	3905	3072	1927	2737	2381	4645	6105	4457	5549	4968	4719	6070	4647	5514	5071
27th FLOOR	1862	2994	5176	4117	2662	3274	4152	3634	2587	3117	2518	1991	3162	4819	4316	3103	3574	4418	3763	2560	3242	2694	4828	6280	4601	5688	5136	4899	6243	4794	5653	5243
26th FLOOR	1886	3036	5234	4160	2691	3307	4208	3674	2618	3156	2556	2017	3202	4875	4360	3135	3608	4476	3804	2589	3282	2734	4915	6381	4687	5757	5230	4987	6342	4882	5721	5340
25th FLOOR	1910	3078	5292	4203	2718	3340	4265	3715	2648	3195	2594	2043	3242	4932	4403	3165	3641	4534	3845	2618	3322	2773	5003	6482	4770	5825	5322	5075	6441	4968	5790	5436
24th FLOOR	1934	3120	5350	4246	2746	3373	4322	3756	2679	3233	2633	2069	3282	4988	4446	3196	3675	4591	3886	2647	3363	2812	5090	6583	4853	5894	5414	5164	6541	5053	5858	5531
23rd FLOOR	1959	3163	5408	4289	2774	3407	4378	3796	2710	3272	2671	2096	3324	5044	4490	3228	3709	4649	3927	2676	3403	2852	5177	6684	4934	5963	5505	5252	6639	5136	5927	5625
22nd FLOOR	1983	3205	5466	4333	2802	3440	4435	3837	2741	3311	2710	2122	3367	5100	4533	3260	3743	4707	3967	2706	3443	2892	5265	6784	5014	6031	5595	5340	6738	5218	5995	5718
21st FLOOR	2008	3248	5524	4378	2831	3473	4492	3877	2773	3350	2749	2149	3409	5156	4577	3293	3777	4765	4008	2737	3483	2932	5352	6886	5095	6100	5685	5429	6838	5300	6064	5812
20th FLOOR	2032	3292	5582	4424	2859	3506	4549	3918	2806	3389	2790	2175	3452	5212	4620	3327	3811	4822	4049	2768	3523	2972	5439	6987	5174	6168	5775	5517	6938	5381	6133	5905
19th FLOOR	2057	3335	5640	4470	2888	3539	4606	3959	2838	3428	2830	2202	3495	5269	4663	3361	3845	4880	4090	2799	3563	3013	5526	7088	5252	6237	5863	5606	7037	5460	6201	5997
18th FLOOR	2082	3379	5699	4517	2916	3572	4664	3999	2871	3467	2871	2229	3538	5325	4707	3396	3879	4938	4131	2830	3603	3054	5614	7188	5329	6305	5951	5694	7136	5538	6270	6088
17th FLOOR	2109	3424	5762	4566	2946	3607	4724	4042	2906	3508	2913	2258	3584	5383	4752	3433	3915	4998	4174	2864	3645	3097	5703	7290	5406	6376	6040	5784	7237	5616	6340	6181
16th FLOOR	2134	3469	5823	4613	2975	3641	4782	4082	2940	3547	2954	2285	3628	5440	4796	3468	3949	5055	4215	2896	3685	3138	5790	7390	5480	6444	6127	5872	7336	5691	6409	6271
15th FLOOR	2159	3513	5885	4661	3004	3674	4840	4123	2974	3586	2995	2313	3673	5496	4839	3505	3982	5114	4255	2929	3725	3180	5877	7490	5554	6513	6213	5961	7434	5765	6477	6361
14th FLOOR	2185	3557	5947	4709	3033	3707	4898	4163	3008	3625	3036	2340	3717	5552	4883	3542	4016	5172	4296	2963	3765	3222	5965	7589	5626	6582	6298	6049	7533	5837	6546	6449
13th FLOOR	2211	3602	6010	4757	3062	3740	4956	4204	3043	3663	3077	2368	3761	5608	4927	3579	4050	5231	4337	2996	3805	3264	6052	7688	5698	6650	6383	6138	7631	5909	6614	6538
12th FLOOR	2237	3646	6073	4806	3091	3773	5014	4245	3078	3702	3118	2396	3806	5664	4972	3617	4084	5290	4378	3031	3845	3306	6139	7787	5768	6719	6467	6226	7729	5979	6683	6626
11th FLOOR	2263	3690	6137	4855	3120	3808	5072	4285	3114	3741	3159	2425	3850	5720	5017	3656	4122	5349	4419	3065	3885	3349	6227	7885	5837	6787	6551	6314	7827	6048	6752	6713
10th FLOOR	2287	3730	6196	4898	3147	3842	5128	4326	3142	3780	3197	2450	3891	5777	5060	3685	4156	5407	4460	3092	3925	3388	6314	7965	5901	6856	6630	6403	7908	6111	6820	6792
9th FLOOR	2311	3770	6254	4941	3173	3876	5185	4367	3170	3820	3236	2476	3932	5833	5104	3728	4191	5465	4501	3118	3966	3428	6401	8045	5966	6924	6709	6491	7988	6174	6889	6872
8th FLOOR	2495	3955	6313	5129	3359	4058	5242	4407	3198	3860	3276	2502	3973	5889	5161	3770	4225	5524	4541	3144	4007	3469	6489	8126	6031	6993	6787	6579	8068	6237	6957	6951
7th FLOOR	2522	3997	6374	5175	3387	4097	5301	4450	3228	3901	3317	2529	4015	5947	5208	3799	4247	5586	4584	3172	4049	3511	6578	8208	6098	7063	6868	6670	8151	6293	7028	7032
6th FLOOR	2568	4056	6463	5240	3441	4157	5414	4510	3276	3963	3377	2576	4076	6058	5268	3843	4297	5673	4645	3217	4112	3573	6686	8315	6183	7171	6968	6779	8270	6358	7123	7133
5th FLOOR	2627	4132	6577	5323	3508	4227	5480	4720	3555	4275	3721	2834	4423	6122	5383	3931	4393	5785	4723	3267	4190	3650	6867	8475	6309	7218	6998	6963	8317	6485	7267	7288
4th FLOOR	4393	5347	6691	6284	6780	4756	5615	4867	3683	4416	3873	2951	4587	6253	5493	4014	4484	5898	4802	3318	4468	3727	7049	8635	6435	7372	7153	7146	8487	6607	7412	7444
3rd FLOOR	4628	6021	7148	6362	9513	5369	5648	5009	3818	4607	4022	3023	4760	6285	6182	4822	4952	6395	5054	3486	4880	4074	7239	8800	6564	7395	7315	7339	8510	6740	7554	7608
2ND FLOOR	4735	6297	7346	6435	9569	6109	5689	5030	3836	4627	4043	3041	4780	6326	6216	4859	4985	6607		3584	5055	4224	7408	8946	6679	7424	7334	7358	8539	6861	7685	7752
1ST FLOOR	4855	6581	7553	6701	9951	6530	6034	5183	3980	4829	4202	3250	4939	6502	6261	4908	5029	6831		3691	5237	4381	7595	9101	6801	7674	7484	7537	8702	6993	7823	10018
BASEMENT	3852	5486	5822	5069	6978	4779	5122	4004	3051	3952	3565	2760	4016	5061	4848	3866	3883	5624		2750	4193	3691	6209	7373	5361	6349	6134	6211	7079		6416	8175
Fnd (service) FLOOR																																

COLUMN SCHEDULE

FLOOR \ COL. NO.	1	2	3	4	5	6	7	8	9	10	11	12	13	14	15	16	17	18	19	20	21	22	23	24	25	26	27	28	29	30	31	32
ROOF/MECH B	608	1018	1521	1110	730	949	1436	965	655	962	965	628	1070	1573	1071	700	888	1562	996	633	1024	1020	2085	2746	1941	2705	2171	2112	2753	1968	2685	2200
56th FLOOR	633	1065	1574	1148	757	982	1495	1004	686	1001	1010	654	1117	1626	1113	730	923	1623	1037	663	1066	1067	2167	2859	2029	2812	2264	2196	2866	2062	2791	2296
55th FLOOR	658	1113	1627	1186	784	1015	1553	1043	717	1040	1055	680	1164	1679	1155	760	957	1684	1078	693	1108	1114	2250	2973	2117	2919	2359	2279	2980	2158	2897	2393
54th FLOOR	685	1162	1683	1225	813	1049	1614	1083	749	1081	1101	707	1213	1733	1199	791	993	1747	1122	725	1152	1163	2334	3089	2208	3027	2456	2364	3095	2257	3004	2492
53rd FLOOR	712	1210	1736	1263	841	1082	1673	1122	779	1120	1145	734	1260	1786	1240	820	1030	1808	1163	755	1194	1209	2416	3203	2300	3133	2553	2448	3209	2356	3110	2593
52nd FLOOR	740	1259	1789	1302	869	1115	1731	1161	810	1159	1190	762	1308	1839	1282	850	1067	1869	1206	785	1236	1256	2499	3318	2393	3240	2651	2532	3324	2458	3216	2694
51st FLOOR	767	1303	1843	1340	895	1147	1790	1200	839	1198	1230	790	1352	1892	1323	877	1104	1934	1252	813	1279	1299	2582	3423	2469	3347	2736	2615	3429	2539	3322	2781
50th FLOOR	822	1352	2150	1640	1066	1436	1968	1497	995	1447	1276	859	1443	2185	1717	1128	1520	2133	1551	968	1543	1349	2672	3545	2553	3478	2840	2715	3551	2632	3452	2878
49th FLOOR	967	1550	2557	2007	1357	1725	2259	1803	1246	1725	1428	1020	1666	2583	2095	1435	1833	2412	1868	1218	1829	1504	2851	3755	2687	3713	3002	2897	3759	2771	3685	3043
48th FLOOR	990	1589	2610	2046	1382	1758	2315	1842	1273	1761	1464	1046	1705	2636	2135	1462	1866	2468	1906	1244	1868	1543	2936	3869	2765	3821	3091	2983	3873	2853	3793	3134
47th FLOOR	1014	1631	2663	2085	1407	1790	2371	1880	1300	1798	1500	1071	1744	2690	2175	1488	1899	2525	1945	1271	1907	1582	3021	3986	2845	3930	3182	3069	3989	2938	3901	3227
46th FLOOR	1038	1672	2716	2123	1433	1822	2426	1918	1327	1834	1537	1096	1783	2744	2215	1515	1932	2582	1983	1297	1946	1620	3105	4103	2925	4039	3272	3154	4104	3023	4009	3320
45th FLOOR	1061	1713	2769	2162	1458	1855	2482	1956	1353	1870	1573	1121	1822	2797	2255	1542	1965	2638	2021	1323	1986	1659	3190	4220	3005	4147	3363	3240	4220	3107	4116	3413
44th FLOOR	1087	1757	2824	2203	1484	1889	2540	1996	1382	1908	1611	1148	1862	2853	2296	1570	2000	2697	2061	1350	2027	1699	3276	4338	3086	4257	3454	3327	4337	3193	4226	3507
43rd FLOOR	1111	1799	2877	2241	1510	1921	2596	2034	1409	1944	1647	1173	1901	2907	2336	1596	2033	2754	2100	1376	2066	1737	3361	4455	3166	4366	3544	3413	4453	3277	4334	3599
42nd FLOOR	1135	1841	2930	2280	1535	1953	2652	2072	1435	1981	1683	1198	1940	2961	2376	1623	2066	2810	2138	1403	2105	1776	3445	4573	3245	4475	3634	3498	4569	3360	4441	3691
41st FLOOR	1160	1883	2983	2319	1560	1986	2707	2111	1462	2017	1720	1223	1979	3014	2415	1650	2100	2867	2177	1429	2144	1815	3530	4690	3325	4583	3724	3584	4685	3444	4549	3783
40th FLOOR	1185	1928	3037	2358	1587	2018	2764	2149	1492	2053	1757	1250	2018	3068	2455	1678	2133	2924	2215	1458	2183	1853	3614	4835	3428	4694	3831	3670	4826	3554	4660	3895
39th FLOOR	1210	1974	3091	2397	1614	2050	2820	2187	1522	2090	1795	1276	2057	3122	2495	1707	2166	2980	2254	1488	2223	1892	3699	4980	3531	4805	3939	3756	4968	3664	4770	4008
38th FLOOR	1235	2020	3145	2437	1641	2083	2877	2225	1552	2126	1833	1302	2096	3175	2535	1736	2199	3037	2292	1517	2262	1931	3784	5103	3634	4872	4047	3841	5087	3774	4836	4120
37th FLOOR	1259	2061	3200	2477	1667	2115	2933	2263	1579	2164	1869	1328	2137	3229	2574	1763	2232	3094	2331	1543	2301	1969	3868	5201	3714	4938	4137	3927	5183	3858	4902	4213
36th FLOOR	1284	2103	3254	2517	1692	2147	2989	2302	1607	2203	1906	1353	2177	3283	2614	1790	2265	3150	2369	1570	2340	2008	3953	5299	3794	5004	4226	4013	5279	3942	4968	4305
35th FLOOR	1309	2146	3311	2559	1719	2181	3047	2341	1635	2243	1944	1380	2219	3338	2656	1819	2300	3209	2409	1598	2381	2054	4039	5399	3876	5072	4318	4100	5377	4028	5036	4399
34th FLOOR	1334	2188	3365	2599	1744	2214	3102	2380	1662	2281	1981	1405	2260	3392	2695	1846	2333	3266	2447	1624	2421	2097	4123	5497	3956	5138	4408	4185	5474	4114	5102	4492
33rd FLOOR	1358	2229	3419	2639	1770	2246	3158	2418	1690	2320	2018	1431	2300	3446	2735	1873	2366	3322	2486	1651	2460	2141	4208	5596	4038	5204	4498	4271	5570	4199	5168	4586
32nd FLOOR	1382	2270	3473	2679	1796	2279	3214	2456	1717	2358	2054	1456	2340	3499	2775	1900	2399	3379	2524	1678	2499	2185	4293	5694	4119	5270	4589	4357	5667	4285	5235	4679
31st FLOOR																																

NOTES:

1. FIRST COLUMN DIMENSION SHOWN IN SCHEDULE IS IN THE EAST-WEST DIRECTION.
2. LOADS ARE GIVEN IN KIPS, AND ARE ULTIMATE LOADS EXCEPT FOUNDATION LOADS, WHICH ARE GIVEN AS SERVICE LOADS.
3. CONCRETE STRENGTHS ARE INDICATED IN THE SCHEDULE.
4. COLUMN SIZES AND REINFORCEMENT ARE SHOWN ONLY WHERE SIZES START AND STOP. BLANK SPACES IN BETWEEN INDICATE SAME SIZE AS INDICATE ABOVE AND BELOW.
5. FOR SHEARWALL DETAILS, SEE S-940 SERIES DWGS.
6. FOR COLUMN DETAILS, SEE DWG. S-955.
7. BUTTRESS INDICATED AS "B" IN COLUMN SCHEDULE.
8. ● INDICATES A CHANGE IN HELD FACE OF THE COLUMN. SEE THE CORRESPONDING FRAMING PLANS.
9. INDICATES ADDITIONAL LOAD ON COLUMN.
10. ☒ INDICATES COLUMN BEING PICKED UP.
11. ALL REBAR TO BE TENSION SPLICED OR USE MECHANICAL COUPLERS.

FOR DOWELS ONLY

KEY PLAN: CHERRY ST / SOUTH STREET / FDR DRIVE (ELEVATED) / MANHATTAN BRIDGE

PROJECT NORTH — TRUE NORTH

DEVELOPER:
EXTELL DEVELOPMENT COMPANY
805 Third Ave, 7th Floor
New York, NY 10022
TEL:212-712-6000 FAX: 212-712-6100

ARCHITECT OF RECORD:
AAI ARCHITECTS, P.C.
14 Wall Street, 2nd Floor
New York, NY 10005
TEL: 212-964-4040 FAX: 212-964-4090

INTERIOR DESIGNER:
MEYER DAVIS
180 Varick St, suite 404
New York, NY 10014
TEL: 212-627-5574

LANDSCAPE DESIGNER:
WEST 8 URBAN DESIGN & LANDSCAPE ARCHITECTURE P.C.
333 Hudson Street, Suite 905
New York, NY 10013
TEL: 212-285-0088 FAX: 212-285-0228

STRUCTURAL ENGINEERS:
WSP
228 East 45th Street
New York, NY 10017
TEL: 212-687-9888 FAX: 646-487-5501

MEP ENGINEERS:
ICOR ASSOCIATES, LLC
485 C Route 1 South, Suite 200
Iselin, NJ 08830
TEL: 908-272-3300 FAX: 908-272-4440

GEOTECHNICAL ENGINEERS:
LANGAN ENGINEERING & ENVIRONMENTAL SERVICES
21 Penn Plaza - 360 West 31st Street, 8th Floor
New York, NY 10001
TEL: 212.479.5400 FAX: 212.479.5444

No.	DESCRIPTION:	DATE:
1	50% SD	02-28-14
2	100% SD	04-25-14
3	ISSUED FOR DOT	04-28-14
4	FOUNDATION FILING	06-10-14
5	FOUNDATION BID PACKAGE	07-25-14
6	50% DD	08-01-14
7	ISSUED FOR DOT	08-07-14
8	ISSUED FOR FOUNDATION BID	08-29-14
9	DESIGN DEVELOPMENT	10-07-14
10	DESIGN DEVELOPMENT	10-07-14
11	ISSUED FOR FOUNDATION BID	01-09-15
12	ISSUED FOR FILING	03-26-15

Discrepancies must be reported immediately to the Architect before proceeding. Only figured dimensions are to be used. Contractors must check all dimensions on site. This drawing is protected by copyright.

ALL DIMENSIONS ARE SHOWN IN IMPERIAL.

CONSULTANT: AAI ARCHITECTS, P.C.

PROJECT: **250 SOUTH STREET**
NEW YORK, NY

DRAWING TITLE: COLUMN SCHEDULE 1

SEAL & SIGNATURE: STATE OF NEW YORK — LICENSED PROFESSIONAL ENGINEER

DATE:	07/25/14
PROJECT No:	1302510
DRAWN:	CADD
CHK:	CL
SCALE:	N.T.S.
DWG No:	S-950.01
DOB PAGE No:	of

DOB EMPLOYEE STAMP: Damian Titus — NYC Buildings — APPROVED Under Directive 2 of 1975 — Date: 05/21/2015 — NYC Development Hub

DOB B-SCAN:

DEPT OF BLDGS121105029 Job Number
E3505757363 Scan Code
30" x 42" Arch E1 - SHEET SIZE

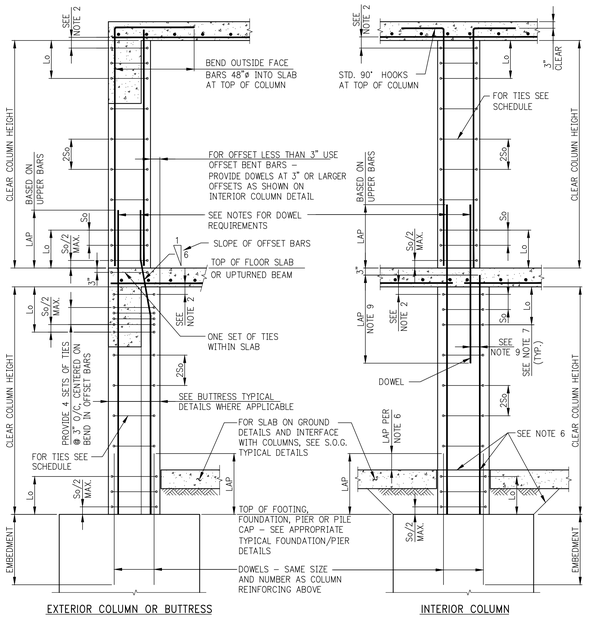

EXTERIOR COLUMN OR BUTTRESS

INTERIOR COLUMN

COLUMN DETAILS

COLUMN TIE SCHEDULE			
VERTICAL BAR SIZE	SIZE & SPACING (So) OF TIES, IN INCHES. MAXIMUM SPACING NOT TO EXCEED ½ OF LEAST COLUMN DIMENSION OR 12". SEE NOTE 8		
	#3	#4	#5
#5	5	–	–
#6	6	–	–
#7	7	–	–
#8	8	8	–
#9	9	9	–
#10	9	10	–
#11	*	11	11
#14	*	12	12
#18	*	12	12

NOTES:

1. * #3 TIES NOT PERMITTED FOR #11, #14, #18 OR BUNDLED VERTICAL BARS.
2. LOCATE TOP SET OF TIES So/2 MAXIMUM BELOW THE LOWEST HORIZONTAL REINFORCEMENT IN SLAB OR DROP PANEL. WHERE BEAMS FRAME FROM FOUR DIRECTIONS INTO COLUMN, TIES MAY TERMINATE NOT MORE THAN 3" BELOW LOWEST REINFORCEMENT IN SHALLOWEST OF SUCH BEAMS.
3. WHERE AREA OF VERTICAL REINFORCEMENT IN LOWER COLUMN IS GREATER THEN THAT OF UPPER COLUMN, EXTEND AREA OF REINFORCEMENT AT LEAST EQUAL TO THAT OF UPPER COLUMN.
4. WHERE AREA OF REINFORCEMENT IN LOWER COLUMN IS LESS THAN THAT OF UPPER COLUMN, PROVIDE ADDITIONAL DOWELS TO MAKE UP THE DIFFERENCE
5. ALL LAP SPLICES AND EMBEDMENTS TO BE TENSION UNLESS OTHERWISE NOTED IN COLUMN SCHEDULE.
6. WHERE SLAB IS POURED OVER FOUNDATION PRIOR TO COLUMN, VERTICAL REINFORCEMENT AND DOWEL LAP TO START AT TOP OF SLAB.
7. LENGTH "Lo" SHALL NOT BE LESS THAN 1/6 OF CLEAR HEIGHT OF COLUMN, MAXIMUM COLUMN DIMENSION, OR 18"
8. IF COLUMN REQUIRES SHEAR REINFORCEMENT, MAXIMUM SPACING OF TIES SHALL BE BE LIMITED TO d/2, REQUIRED SIZE, NUMBER AND SPACING OF TIES MAY BE MORE STRINGENT THAN SHOWN IN TYPICAL DETAILS.
9. IF OFFSET OF DOWEL IS MORE THAN 6", LAP SHALL BE TWICE THE COMPRESSION DEVELOPMENT LENGTH OF THE SMALLER BAR

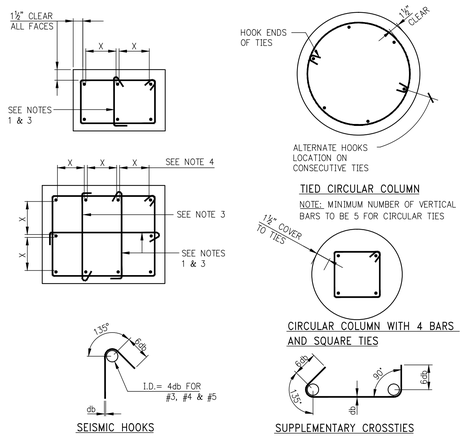

COLUMN REINFORCEMENT AND TIES ARRANGEMENT

NOTES:

1. SINGLE LEG CROSSTIES SHOWN DASHED MAY BE OMITTED WHEN THE VERTICAL BAR IS NO FARTHER THAN 6" CLEAR ON EACH SIDE FROM ADJACENT TIED BARS.
2. WHEN THERE IS A SERIES OF VERTICAL BARS (SUCH AS IN WALL-LIKE COLUMNS) AND BARS ARE SPACED NOMINALLY AT 6" O/C, EVERY OTHER VERTICAL BAR WILL REQUIRE A CROSSTIE.
3. ALTERNATE 90° AND 135° ENDS ON CONSECUTIVE SINGLE LEG CROSSTIES THROUGHOUT HEIGHT OF MEMBER.
4. DETAILER SHALL SPACE BARS EQUIDISTANT ON ALL FACES UNLESS OTHERWISE SHOWN IN DETAILS.

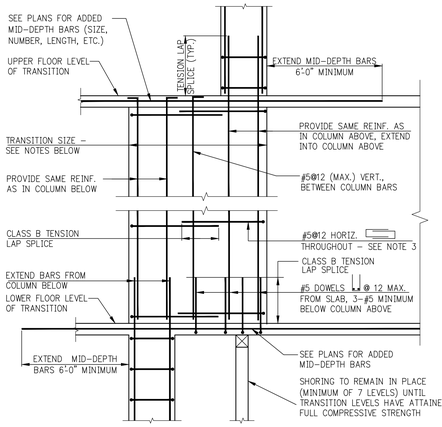

DETAIL A – ELEVATION OF "WALKING" COLUMN TRANSITION

NOTES:

1. FOR DIMENSIONS AND LOCATION OF TRANSITION SEE COLUMN LOCATION PLANS AND/OR COLUMN SCHEDULE.
2. VERTICAL REINFORCEMENT IN TRANSITION TO BE AS SHOWN IN DETAILS 'A' AND 'B' UNLESS THE COLUMN SCHEDULE CALLS FOR SPECIFIC VERTICAL REINFORCEMENT WITHIN THE TRANSITION.
3. IN ADDITION TO #5@12 HORIZONTAL HOOPS, PROVIDE HOOPS AND CROSSTIES TO SATISFY TIEING REQUIREMENTS OF TYPICAL COLUMN DETAILS FOR ALL VERTICAL REINFORCEMENT.

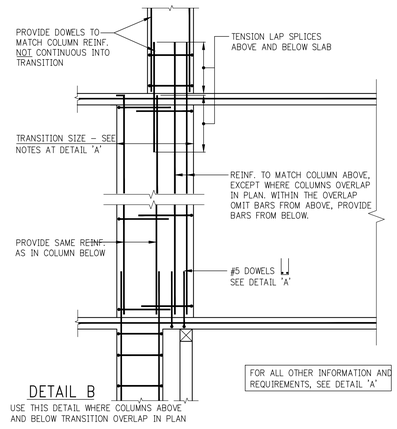

DETAIL B

USE THIS DETAIL WHERE COLUMNS ABOVE AND BELOW TRANSITION OVERLAP IN PLAN

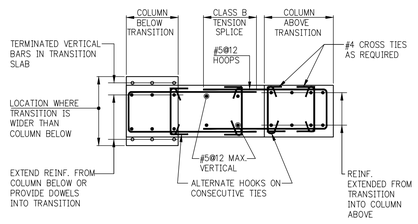

DETAIL C – HORIZONTAL SECTION THROUGH "WALKING" COLUMN TRANSITION

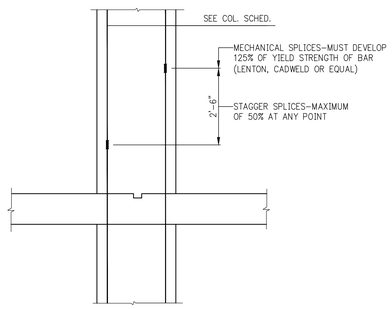

MECHANICAL SPLICE DETAIL

KEY PLAN:

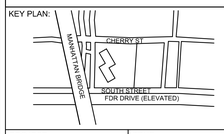

PROJECT NORTH | TRUE NORTH

DEVELOPER:
EXTELL DEVELOPMENT COMPANY
805 Third Ave, 7th Floor
New York, NY 10022
TEL: 212-712-6000 FAX: 212-712-6100

ARCHITECT OF RECORD:
AAI ARCHITECTS, P.C.
14 Wall Street, 2nd Floor
New York, NY 10005
TEL: 212-964-4040 FAX: 212-964-4090

INTERIOR DESIGNER:
MEYER DAVIS
180 Varick St, suite 404
New York, NY 10014
TEL: 212-627-5574

LANDSCAPE DESIGNER:
WEST 8 URBAN DESIGN & LANDSCAPE ARCHITECTURE P.C.
333 Hudson Street, Suite 905
New York, NY 10013
TEL: 212-285-0088 FAX: 212-285-0228

STRUCTURAL ENGINEERS:
WSP
228 East 45th Street
New York, NY 10017
TEL: 212-687-9888 FAX: 646-487-5501

MEP ENGINEERS:
ICOR ASSOCIATES, LLC
485 C Route 1 South, Suite 200
Iselin, NJ 08830
TEL: 908-272-3300 FAX: 908-272-4440

GEOTECHNICAL ENGINEERS:
LANGAN ENGINEERING & ENVIRONMENTAL SERVICES
21 Penn Plaza - 360 West 31st Street, 8th Floor
New York, NY 10001
TEL: 212.479.5400 FAX: 212.479.5444

No.	DESCRIPTION:	DATE:
1	ISSUED FOR DOT	04–28–14
2	FOUNDATION FILING	06–10–14
3	FOUNDATION BID PACKAGE	06–10–14
4	ISSUED FOR FOUNDATION BID	07–25–14
5	50% DD	08–01–14
6	ISSUED FOR DOT	08–07–14
7	ISSUED FOR FOUNDATION BID	08–29–14
8	DESIGN DEVELOPMENT	10–07–14
9	ISSUED FOR FOUNDATION BID	01–09–15
10	ISSUED FOR FILING	02–13–15
11	CONCRETE BID PACKAGE	03–06–15
12	ISSUED FOR FILING	03-26-15

Discrepancies must be reported immediately to the Architect before proceeding. Only figured dimensions are to be used. Contractors must check all dimensions on site. This drawing is protected by copyright.

ALL DIMENSIONS ARE SHOWN IN IMPERIAL.

CONSULTANT: AAI ARCHITECTS, P.C.

PROJECT:
250 SOUTH STREET
NEW YORK, NY

DRAWING TITLE:
TYPICAL CONCRETE COLUMN DETAILS 1

SEAL & SIGNATURE: STATE OF NEW YORK · AHMAD RAMADAN · No. 086527 · LICENSED PROFESSIONAL ENGINEER

DATE:	07/25/14
PROJECT No:	1302510
DRAWN: CADD	REV:
CHK: CL	
SCALE: N.T.S.	

DWG No:
S-955.00

DOB PAGE No: of

DOB EMPLOYEE STAMP: Damian Titus — Buildings — APPROVED Under Directive 2 of 1975 Date: 05/21/2015: NYC Development Hub

DOB B-SCAN:

FILE NAME:
PLOT DATE:

DEPT OF BLDGS121180528 Job Number
ES7410020091 Scan Code
30" x 42" Arch E1 - SHEET SIZE

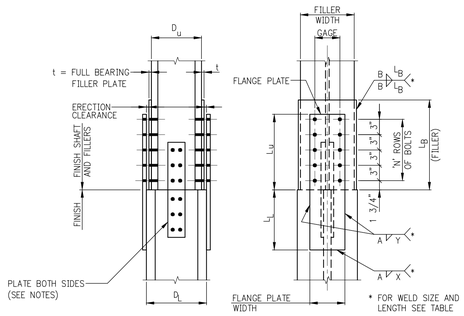

UPPER COLUMN DEPTH NOMINALLY TWO INCHES LESS THAN LOWER COLUMN DEPTH

(FILLERS DEVELOPED FOR BEARING)

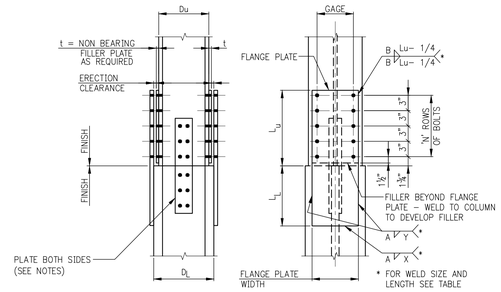

UPPER AND LOWER COLUMNS SAME NOMINAL DEPTH

NOTE:

IF LOWER COLUMN DEPTH D_L IS LESS THAN UPPER COLUMN DEPTH D_U FILLER PLATES ARE TO USED AT LOWER COLUMN – INCREASE WELD SIZE BY THICKNESS OF FILLER PLATE.

COLUMN SPLICES

COLUMN SPLICE REQUIREMENTS:

1. INTERFACE OF UPPER AND LOWER COLUMNS SHALL DEVELOP FULL CAPACITY OF SMALLER COLUMN IN BEARING AND TENSTION LOADS SHOWN ON COLUMN SCHEDULE.
2. FILLER PLATES TO BE SAME GRADE OF STEEL (F_y) AS COLUMNS.
3. FILLER PLATES SHALL DEVELOP THE PORTION OF THE SMALLER COLUMN FLANGE CAPACITY LOST DUE TO NON–ALIGNMENT OF FLANGES WHERE COLUMNS ARE NOT CENTERED OR OF DIFFERENT NOMINAL DEPTH.
4. SHOP DRAWINGS SHALL REQUIRE THAT CENTER PUNCH MARKS BE PLACED ON CENTERLINES OF ALL FACES OF UPPER AND LOWER SHAFTS.
5. CONTRACTOR MAY SUBMIT A PROPOSAL TO PROVIDE ALL–WELDED COLUMN FLANGE – PLATED SPLICES OR DIRECTLY WELDED FLANGE SPLICES, FOR THE ENGINEER'S REVIEW AND APPROVAL.
6. CONTRACTOR MAY SUBMIT A PROPOSAL TO PROVIDE A BUTT PLATE IN LIEU OF BEARING FILLERS AT COLUMNS WITH A DEPTH D–su–S NOMINALLY TWO INCHES LESS THAN DEPTH D–sL–S, FOR THE ENGINEER'S REVIEW AND APPROVAL.
7. COLUMN SPLICES SHALL BE LOCATED 4 FT. OR MORE AWAY FROM THE BEAM–TO–COLUMN CONNECTIONS.

ADDITIONAL REQUIREMENTS AT COLUMN SPLICES IN BRACED FRAMES:

1. COLUMN SPLICES SHALL BE CONNECTED FOR NET TENSION, Pu (KIPS) AS INDICATED ON BRACE FRAME ELEVATIONS OR ON COLUMN SCHEDULE.
2. COLUMN SPLICES SHALL BE LOCATED IN THE MIDDLE ONE–THIRD OF COLUMN CLEAR HEIGHT.
3. COLUMN SPLICE SHEAR CAPACITY SHALL DEVELOP AT LEAST THE NOMINAL SHEAR STRENGTH (ϕV_n) OF THE SMALLER CONNECTED MEMBER, WHERE:
   $\phi V_n = 0.9 \times 0.6 \times F_y \times A_w$ (KIPS)
   $A_w = (d_b - 2t_f) \times t_w$ ($IN.^2$)
   F_y = MIN. YIELD STRESS (KSI)
   d_b, t_f, t_w = DIMENSIONAL SECTION PROPERTIES (IN.)
4. COLUMN SPLICE FLEXURAL CAPACITY SHALL DEVELOP AT LEAST 50 PERCENT OF THE NOMINAL FLEXURAL STRENGTH OF SMALLER CONNECTED MEMBER, WHERE:
   $\phi M_n = 0.9 \times 0.5 \times F_y \times Z$ (KIP–IN)
   F_y = MIN. YIELD STRESS (KSI)
   Z = COLUMN PLASTIC SECTION MODULUS IN DIRECTION PARALLEL TO BRACED FRAME ($IN.^3$)
5. IF WELDS ARE USED IN COLUMN SPLICES RESISTING NET TENSION, THE FOLLOWING ADDITIONAL REQUIREMENTS SHALL BE MET:
   A. GROUPS 3, 4 & 5 SHAPES WITH FLANGES 1 1/2" AND THICKER, PLATES 2" AND THICKER SHALL HAVE MIN. CHARPY V–NOTCH TOUGNESS OF 20 FT–LBS. AT 70° F
   B. CHARPY V–NOTCH TOUGHNESS OF FILLER METAL SHALL BE A MINIMUM OF 20FT–LBF @ MINUS 20°F.
   C. DESIGN STRENGTH OF PARTIAL–JOINT–PENETRATION GROVE WELDS SHALL BE AT LEAST 200 PERCENT OF REQUIRED STRENGTH.

FLANGE PLATES – MINIMUM REQUIREMENTS

COLUMN FLANGE WIDTH	COLUMN FLANGE THICKNESS tf	FLANGE PLATE MIN. WIDTH	FLANGE PLATE MIN. THICK	MINIMUM NUMBER OF ROWS OF 7/8"ø SLIP CRITICAL BOLTS 'N'	MINIMUM L_L (LOWER SHAFT)	MINIMUM SIZE OF FILLET WELDS 'A'*	MINIMUM SIZE OF FILLET WELDS 'B'**
6 1/2	–	5	1/2	2	8	1/4	1/4**
8+	–	6	1/2	2	10	1/4*	1/4**
10+	–	8	1/2	2	10	1/4*	1/4**
12+	tf<1.50"	8	5/8	3	12	5/16	5/16
12+	tf>1.50"	10	3/4	4	15	5/16	5/16
14+	–	10	1/2	3	12	5/16	5/16
15+	–	12	5/8	4	12	5/16	5/16
16+	tf<2.50"	12	3/4	4	12	5/16	5/16
16+	tf>2.50"	14	3/4	4	14	3/8	5/16
	–	14	1	5	16	3/8	5/16

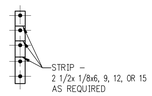

DETAIL OF STRIP SHIMS

* (WELD 'A') IF COLUMN FLANGE THICKNESS EXCEEDS 3/4", THE MINIMUM WELD SIZE SHALL BE INCREASED TO 5/16"
** (WELD 'B') IF EITHER THE UPPER COLUMN FLANGE OR THE FILLER PLATE THICKNESS EXCEEDS 3/4", THE MINIMUM WELD SIZE SHALL BE INCREASED TO 5/16"

KEY PLAN:

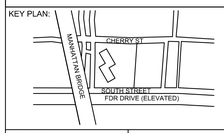

PROJECT NORTH / TRUE NORTH

DEVELOPER:
EXTELL DEVELOPMENT COMPANY
805 Third Ave, 7th Floor
New York, NY 10022
TEL: 212-712-6000 FAX: 212-712-6100

ARCHITECT OF RECORD:
AAI ARCHITECTS, P.C.
14 Wall Street, 2nd Floor
New York, NY 10005
TEL: 212-964-4040 FAX: 212-964-4090

INTERIOR DESIGNER:
MEYER DAVIS
180 Varick St, suite 404
New York, NY 10014
TEL: 212-627-5574

LANDSCAPE DESIGNER:
WEST 8 URBAN DESIGN & LANDSCAPE ARCHITECTURE P.C.
333 Hudson Street, Suite 905
New York, NY 10013
TEL: 212-285-0088 FAX: 212-285-0228

STRUCTURAL ENGINEERS:
WSP
228 East 45th Street
New York, NY 10017
TEL: 212-687-9888 FAX: 646-487-5501

MEP ENGINEERS:
ICOR ASSOCIATES, LLC
485 C Route 1 South, Suite 200
Iselin, NJ 08830
TEL: 908-272-3300 FAX: 908-272-4440

GEOTECHNICAL ENGINEERS:
LANGAN ENGINEERING & ENVIRONMENTAL SERVICES
21 Penn Plaza - 360 West 31st Street, 8th Floor
New York, NY 10001
TEL: 212.479.5400 FAX: 212.479.5444

No.	DESCRIPTION:	DATE:
1	ISSUED FOR FOUNDATION BID	01–07–15
2	ISSUED FOR FILING	02–13–15
3	STEEL BID PACKAGE	02–24–15
4	ISSUED FOR FILING	03-26-15

NOT FOR CONSTRUCTION

Discrepancies must be reported immediately to the Architect before proceeding. Only figured dimensions are to be used. Contractors must check all dimensions on site. This drawing is protected by copyright.

ALL DIMENSIONS ARE SHOWN IN IMPERIAL.

CONSULTANT:
AAI ARCHITECTS, P.C.

PROJECT:
250 SOUTH STREET
NEW YORK, NY

DRAWING TITLE:
TYPICAL STEEL COLUMN DETAILS 2

SEAL & SIGNATURE:
STATE OF NEW YORK · ARMAD RAMJOHAN · No. 085552 · LICENSED PROFESSIONAL ENGINEER

DATE: 07/25/14
PROJECT No: 1302510
DRAWN: CADD REV:
CHK: CL
SCALE: N.T.S.
DWG No: **S-958.00**
DOB PAGE No: of

DOB EMPLOYEE STAMP:
Damian Titus
Buildings
APPROVED
Under Directive 2 of 1975
Date: 05/21/2015:
NYC Development Hub

DOB B-SCAN:

FILE NAME:
PLOT DATE:

DEPT OF BLDGS 121185528 Job Number
ES197134318 Scan Code
30" x 42" Arch E1 - SHEET SIZE

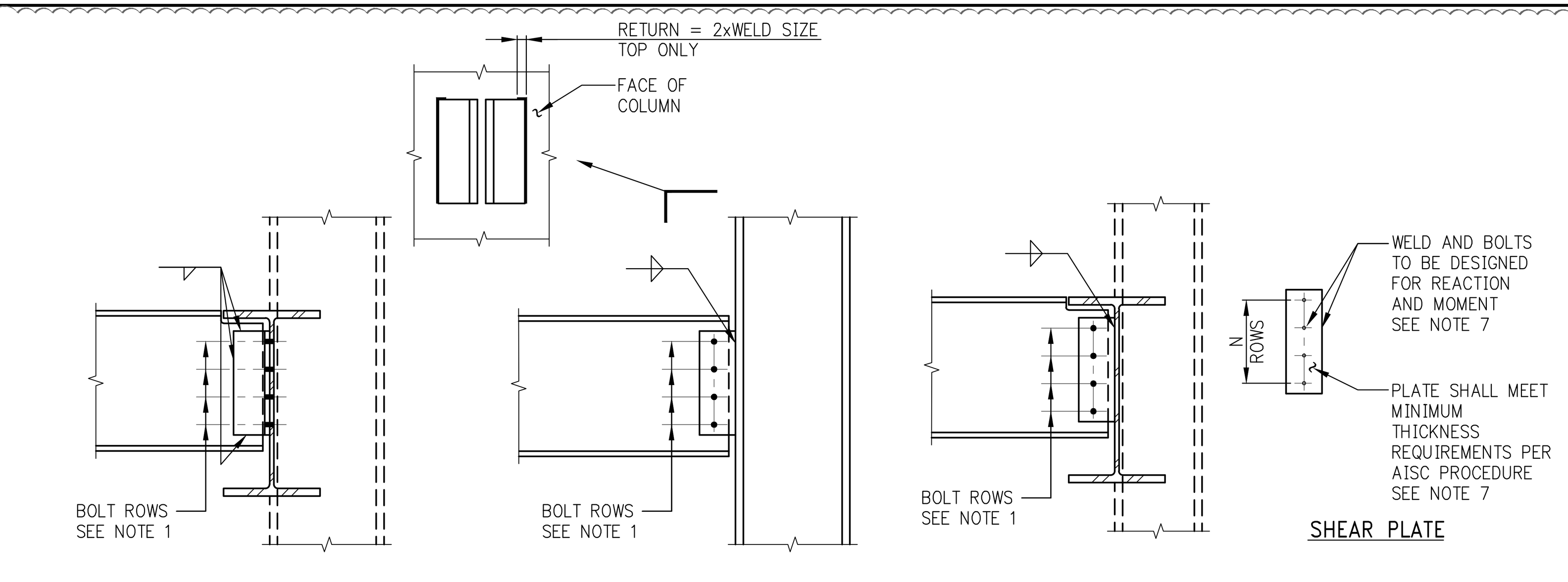

CONNECTION WELDED TO BEAMS BOLTED TO COLUMN OR GIRDER

CONNECTION BOLTED TO BEAM WELDED TO COLUMN

CONNECTION BOLTED TO BEAMS WELDED TO COLUMN OR GIRDER

DOUBLE ANGLE CONNECTIONS TO BEAM OR COLUMN
NOTE: CONNECTION SIMILAR WHEN CONNECTING TO GIRDER OR COLUMN (SHOWN AS DASHED LINE)

SHEAR PLATE CONNECTIONS TO BEAM OR COLUMN
NOTE: CONNECTION SIMILAR WHEN CONNECTING TO GIRDER OR COLUMN (SHOWN AS DASHED LINE)

S I M P L E   S H E A R   C O N E C T I O N S

(THESE CONNECTIONS MAY BE USED AT TYPE B MOMENT CONNECTIONS. FOR TYPE A MOMENT CONNECTIONS, SEE TYPE A SHEAR CONNECTIONS IN DWG. S-601.)

DESIGN OF SIMPLE SHEAR CONNECTIONS – REQUIREMENTS

1. SIMPLE SHEAR CONNECTIONS SHALL BE DESIGNED FOR THE REACTION SHOWN ON THE DRAWINGS OR THE GREATEST OF THE FOLLOWING:
a) FOR COMPOSITE BEAMS, REACTION FROM AISC LRFD UNIFORM LOAD TABLES FOR BEAMS FOR APPLICABLE BEAM MATERIAL MULTIPLIED BY 2.0.
b) FOR NON-COMPOSITE BEAMS, REACTION FROM AISC LRFD UNIFORM LOAD TABLES FOR BEAMS FOR APPLICABLE BEAM MATERIAL MULTIPLIED BY 1.3
c) MINIMUM NUMBER OF BOLT ROWS AND MINIMUM CONNECTION CAPACITY, SEE TABLE.
d) CONNECTIONS OF BEAMS SHORTER THAN 10'-0" SHALL BE DESIGNED FOR MIN. REACTION IN TABLE B, U.O.N. ON DWGS.
2. IN ADDITION TO THE VERTICAL SHEAR BEAM TO BEAM END CONNECTIONS SHALL BE DESIGNED FOR THE MOST CRITICAL OF THE FOLLOWING:
a) AXIAL LOAD SHOWN ON DRAWINGS (±P) CONCOMITANT WITH THE VERTICAL SHEAR.
b) A DESIGN TENSION STRENGTH EQUAL TO THE LARGER OF THE PROVIDED SHEAR LOAD AT EITHER END BUT NOT LESS THAN 15^K (LRFD), U.O.N. THE CONNECTION DESIGN FOR THIS REQUIREMENT SHALL BE IN ACCORDANCE WITH THE PROVISIONS OF N.Y. CITY BUILDING CODE SECTIONS BC 2213.2 ITEM 3.
3. IN ADDITION TO THE VERTICAL SHEAR BEAM TO COLUMNS END CONNECTION SHALL BE DESIGNED FOR THE MOST CRITICAL OF THE FOLLOWING:
a) AXIAL LOAD SHOWN ON DRAWINGS (±P) CONCOMITANT WITH THE VERTICAL SHEAR.
b) A DESIGN TENSION STRENGTH EQUAL TO THE LARGER OF THE PROVIDED SHEAR LOAD AT EITHER END BUT NOT LESS THAN 15^K (LRFD), U.O.N. THE CONNECTION DESIGN FOR THIS REQUIREMENT SHALL BE IN ACCORDANCE WITH THE PROVISIONS OF N.Y. CITY BUILDING CODE SECTIONS BC 2213.2 ITEM 3.
4. BOLT TYPE SHALL BE ASTM A 325 (CONTRACTOR MAY USE A490 BOLTS AT HIS OPTION, SUBJECT TO MINIMUM NUMBER OF BOLTS REQUIREMENT).
5. ALL BOLTS SHALL BE FULLY PRETENSIONED.
6. PROVIDE WEB REINFORCING AS REQUIRED DUE TO WEB CUTS, COPES, ETC.
7. DESIGN OF DOUBLE ANGLE AND SHEAR PLATE CONNECTIONS SHALL BE BASED UPON THE LATEST AISC PROCEDURES SHOWN IN THE AISC MANUAL OF STEEL CONSTRUCTION.

TABLE A
MINIMUM NUMBER OF BOLTS FOR SIMPLE SHEAR CONN.

BEAM SIZE	"N"
W8	2
W10	2
W12	3
W14	3
W16	3
W18	4
W21	4
W24	4
W27	5
W30	5
W33	6
W36	6
W40	7
W44	7

"N" = MINIMUM NUMBER OF BOLTS REQUIRED PER CONNECTION. THE TABULATED MINIMUM NUMBER OF BOLTS WILL GENERALLY BE EXCEEDED BY OTHER DESIGN CRITERIA.

TABLE B
MINIMUM CONN. FACTORED LOAD

BEAM SIZE	FACTORED LOAD (K)
W6	15
W8	20
W10	25
W12	25
W14	40
W16	45
W18	45
W21	55
W24	55
W27	65
W30	65
W33	80
W36	80
W40	90
W44	90

TABLE C
MINIMUM FILLET WELDS SIZE

THICKER PART JOINED	MINIMUM FILLET WELD
UP TO 3/4"	1/4"
OVER 3/4"	5/16"

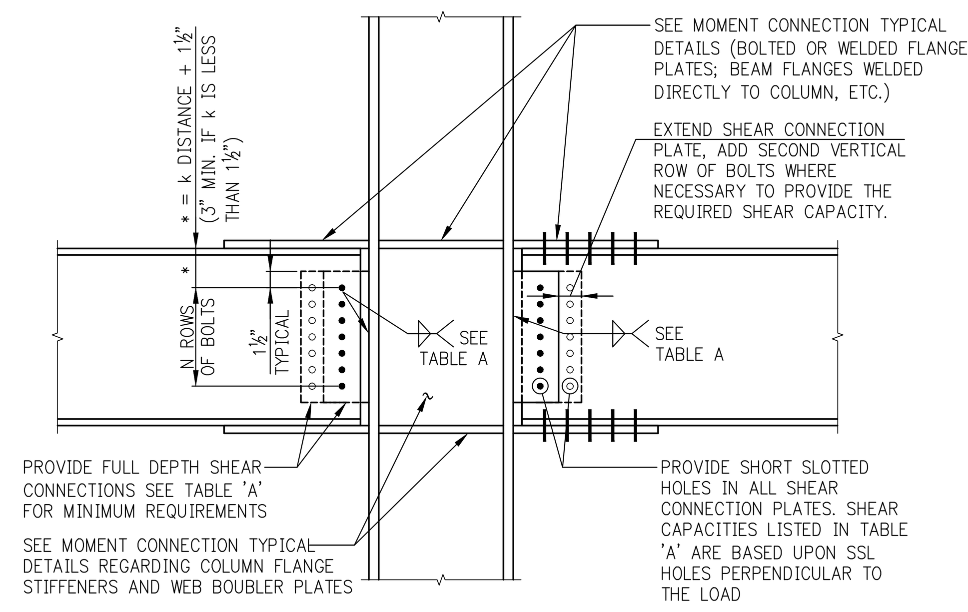

L.L.R.S. SHEAR CONNECTION TO COLUMN FLANGE

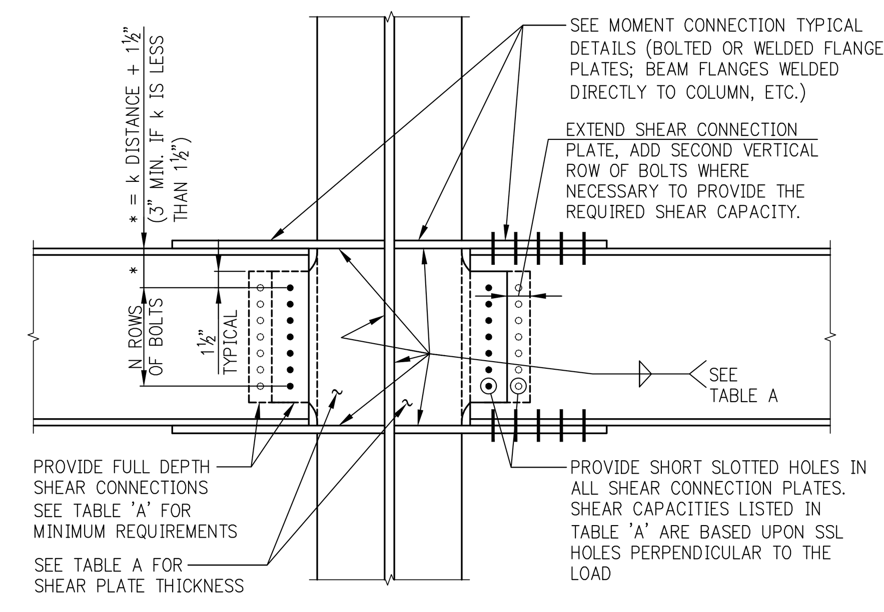

L.L.R.S. SHEAR CONNECTION TO COLUMN WEB

T A B L E   A
SHEAR CONNECTION REQUIREMENTS FOR TYPE 'A' MOMENT CONNECTIONS

– PROVIDE FULL DEPTH SINGLE SHEAR PLATE.
– PROVIDE MINIMUM WELD SIZE TABULATED.
– BOLTS TO BE MINIMUM ⅞" DIAMETER, A325(SC).
– PROVIDE 1⅛" DIAMETER A490(SC) BOLTS WHERE ACTUAL GIRDER SHEAR EXCEEDS TABULATED CAPACITY.

WIND GIRDER DEPTH	NUMBER OF HORIZONTAL ROWS OF BOLTS "N"	MINIMUM SHEAR PLATE THICKNESS		MINIMUM FILLET WELD SIZE (E70XX)	CONNECTION SHEAR CAPACITY (LRFD – KIPS) ⅞"ø A325
		Fy=50	Fy=36		
W12, W14	3	½	⅝	5/16	33
W16	4	½	⅝	5/16	44
W18	5	½	⅝	5/16	56
W21	6	½	⅝	5/16	67
W24	6	½	⅝	5/16	67
W27	7	½	⅝	5/16	78
W30	8	½	⅝	5/16	89
W33	9	½	⅝	5/16	100
W36	10	½	⅝	5/16	111
W40	11	½	⅝	5/16	122
W44	12	½	⅝	5/16	133

L.L.R.S.   T Y P E   'A'   S H E A R   C O N N C T I O N S

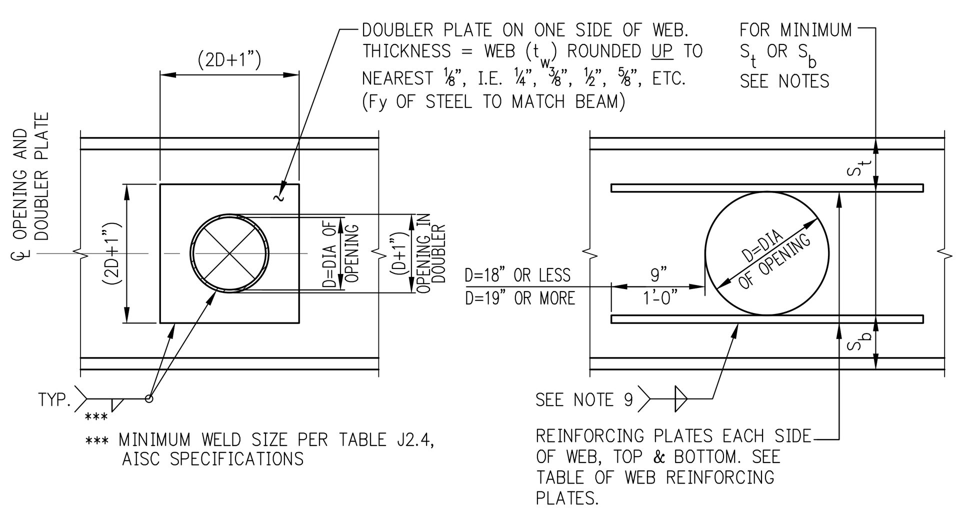

CIRCULAR OPENING WITH WEB DOUBLER PLATE

CIRCULAR OPENING WITH HORIZONTAL WEB PLATES

BEAM WEB CIRCULAR OPENINGS

CIRCULAR OPENINGS– MAXIMUM DIAMETERS OF UNREINFORCED AND REINFORCED OPENINGS

BEAM SIZE	MAX. HOLE DIA.: UNREINFORCED	MAX. HOLE DIA.: WEB DOUBLER	MAX. HOLE DIA.: HORIZ. WEB ℞'S
W12 (40 #/F & UP)	3.0"	4.25"	6.0"
(35 #/F & LESS)	3.0"	4.75"	6.0"
W14 (43 #/F & UP)	3.5"	5.0"	7.0"
(38 #/F & LESS)	3.5"	5.5"	7.0"
W16	4.0"	6.25"	9.0"
W18	4.5"	7.25"	11.0"
W21	5.0"	8.5"	12.5"
W24	6.0"	10.0"	14.5"
W27	6.5"	11.0"	16.0"
W30	7.5"	13.0"	18.0"
W33	8.0"	14.5"	20.0"
W36	9.0"	15.5"	21.5"
W40	10.0"	16.5"	24.0"
W44	11.0"	18.5"	26.0"

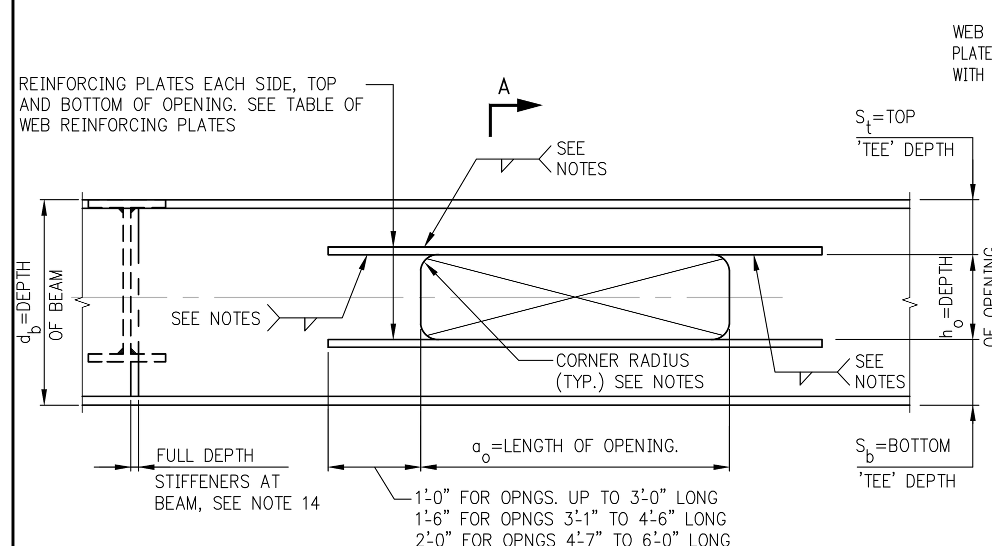

BEAM WEB OPENINGS

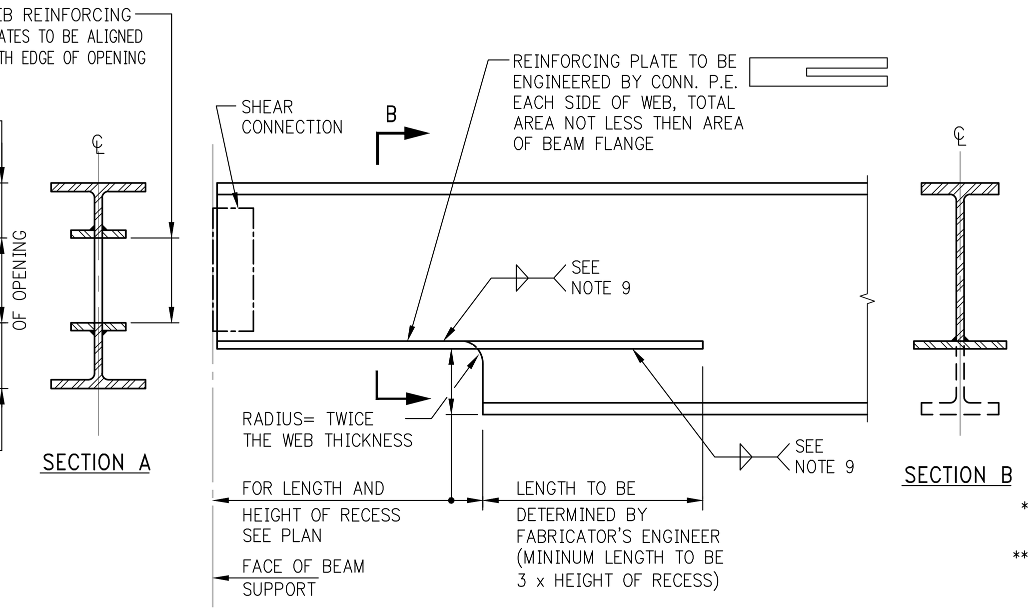

RECESS IN BEAM SOFFIT AT SUPPORT

TABLE OF MINIMUM WEB REINFORCING PLATES

℞ SIZE– EACH SIDE OF WEB (in x in)	Ar PROVIDED (2 ℞'S) (in^2)	RANGE OF BEAM WEIGHTS FOR USE OF ℞'S
⅜ x 1½	1.13	UP TO 22 #/F
⅜ x 2	1.50	23 THRU 30 #/F
½ x 2	2.00	31 THRU 40 #/F
½ x 2½	2.50	41 THRU 50 #/F
½ x 3	3.00	51 THRU 60 #/F
⅝ x 3	3.75	61 THRU 75 #/F
¾ x 3	4.50	76 THRU 90 #/F
⅞ x 3	5.25	91 THRU 105 #/F
1 x 3	6.00	106 THRU 120 #/F
*1 x 3½	7.00	121 THRU 140 #/F
*1 x 4	8.00	141 THRU 160 #/F
**	**	OVER 160 #/F

* PLATE EXTENSIONS BEYOND WEB OPENING SHALL BE INCREASED BY 33% OVER THOSE SHOWN ON TYPICAL DETAILS.

** PROVIDE SUITABLE PLATE SIZES SUCH THAT COMBINED AREA OF TWO PLATES IS EQUAL IN AREA TO AT LEAST 50% OF FLANGE AREA OF BEAM BEING REINFORCED, UNLESS SPECIFIC REINFORCING PLATE DETAILS ARE SHOWN ON THE DRAWINGS. PLATE EXTENSIONS BEYOND WEB OPENING SHALL BE INCREASED BY 33% OVER THOSE SHOWN ON TYPICAL DETAIL.

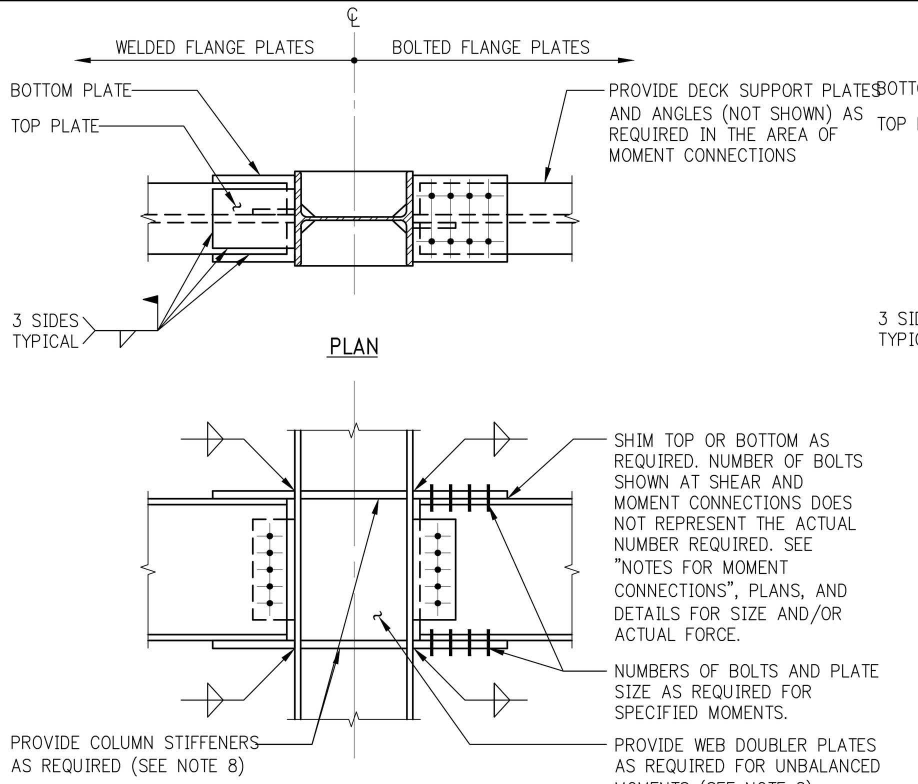

BEAM TO COLUMN FLANGE WITH BOLTED OR WELDED FLANGE PLATES

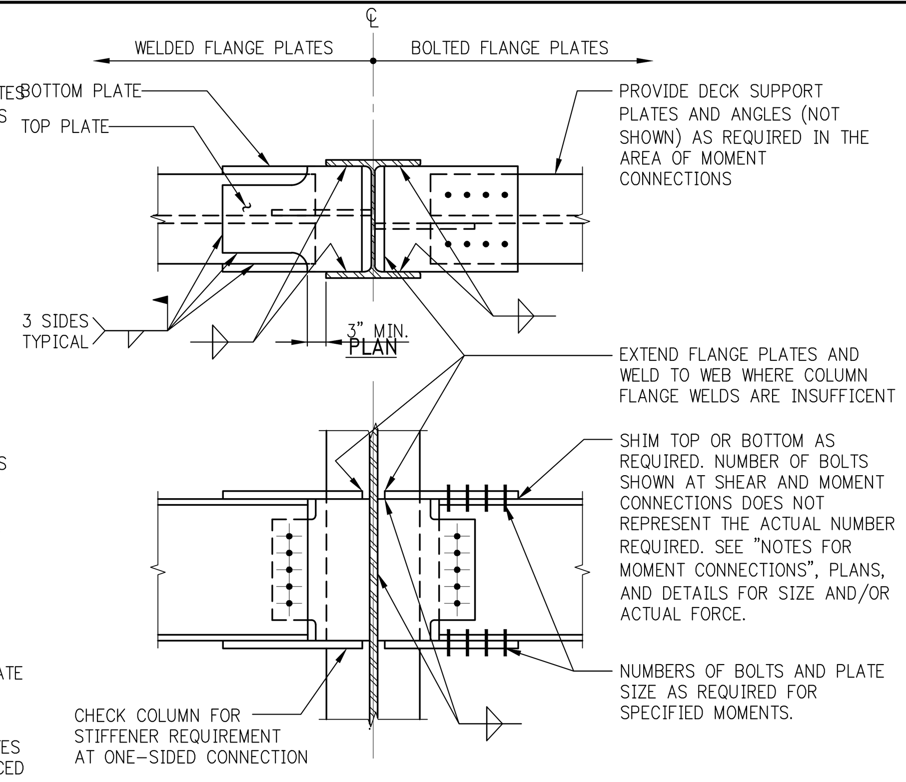

BEAM TO COLUMN WEB WITH BOLTED OR WELDED FLANGE PLATES

TYPICAL BEAM WEB OPENING NOTES:

1. THE GRADE OF STEEL (Fy) OF ALL REINFORCING PLATES AND WEB DOUBLERS SHALL BE EQUAL TO THE GRADE OF STEEL (Fy) OF THE BEAM BEING REINFORCED.
2. USE THESE DETAILS TO REINFORCE ALL WEB OPENINGS UNLESS OTHER SPECIFIC REINFORCING PLATES ARE CALLED FOR ON THE DRAWINGS.
3. SOME SMALL WEB PENETRATIONS MAY NOT REQUIRE WEB REINFORCING. REINFORCING MAY BE OMITTED ONLY WHEN SPECIFIC DIRECTION IS GIVEN ON THE FRAMING PLAN THAT WEB REINFORCING IS NOT REQUIRED.
4. MAXIMUM h_0 = 0.60 d_b FOR W18 AND DEEPER
= 0.563 d_b FOR W16 (9" OPENING)
= 0.50 d_b FOR W12 & W14
(THIS DETAIL DOES NOT APPLY TO BEAMS SHALLOWER THAN 12")
5. MINIMUM S_t OR S_b = 0.20 d_b FOR W18 AND DEEPER
= 3.5" FOR W16
= 0.25 d_b FOR W12 & W14.
6. THE MAXIMUMS AND MINIMUMS SHOWN IN NOTES 4 AND 5 DO NOT HAVE TO OCCUR SIMULTANEOUSLY – A SHALLOWER DEPTH OPENING MAY BE SHIFTED UP OR DOWN FROM MID – DEPTH, RESULTING IN A MINIMUM S_t OR S_b.
7. MAXIMUM LENGTH OF OPENING (a_o) IS DEPENDENT UPON S_t OR S_b: a_o 8xS_t OR 8xS_b, WHICHEVER IS SMALLER. MAXIMUM LENGTH OF OPENING SHALL NOT EXCEED 6'-0" REGARDLESS OF BEAM SIZE AND/OR OPENING DEPTH.
8. THE WELD WITHIN THE LENGTH OF THE OPENING SHALL RESIST TWICE THE YIELD STRENGTH (ø $F_y A_r$) OF THE WEB REINFORCING PLATE, UNLESS OTHERWISE NOTED.
9. THE WELDS IN EACH EXTENSION OF THE WEB REINFORCING PLATE BEYOND THE ENDS OF THE OPENING SHALL DEVELOP THE YIELD STRENGTH OF THE WEB REINFORCING PLATE. MINIMUM WELD SIZE PER TABLE J2.4, AISC SPECIFICATIONS.
10. CORNER RADII SHALL NOT BE LESS THAN TWICE THE THICKNESS OF THE BEAM WEB.
11. THE NEAREST EDGE OF ANY WEB OPENING SHALL BE AT LEAST A DISTANCE d_b FROM A BEAM SUPPORT.
12. TWO ADJACENT WEB OPENINGS SHALL BE SEPARATED BY A MINIMUM DISTANCE BETWEEN EDGES OF OPENINGS EQUAL TO THE LARGER OF THE TWO WEB OPENING LENGTHS.
13. NO CONCENTRATED LOAD SHALL BE LOCATED WITHIN THE LENGTH OF THE WEB OPENING.
14. NO BEAM SHALL BE FRAMED INTO THE BEAM CONTAINING THE WEB OPENING WITHIN A DISTANCE OF d_b/2 FROM THE EDGE OF THE OPENING. ANY BEAM LOCATED BETWEEN A DISTANCE OF d_b/2 AND d_b FROM THE EDGE OF AN OPENING SHALL BE FRAMED TO FULL DEPTH STIFFENERS ON EACH SIDE OF THE WEB.
15. NO BEAM PENETRATIONS WILL BE ALLOWED UNLESS SIZE AND LOCATION ARE SHOWN ON PLAN.

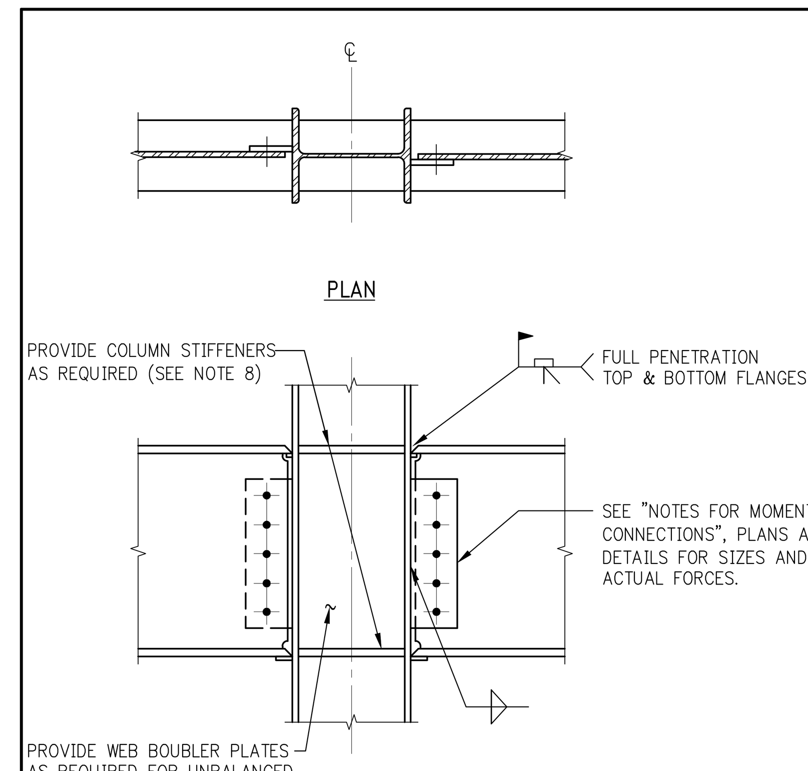

BEAM FLANGES WELDED DIRECTLY TO COLUMN FLANGES

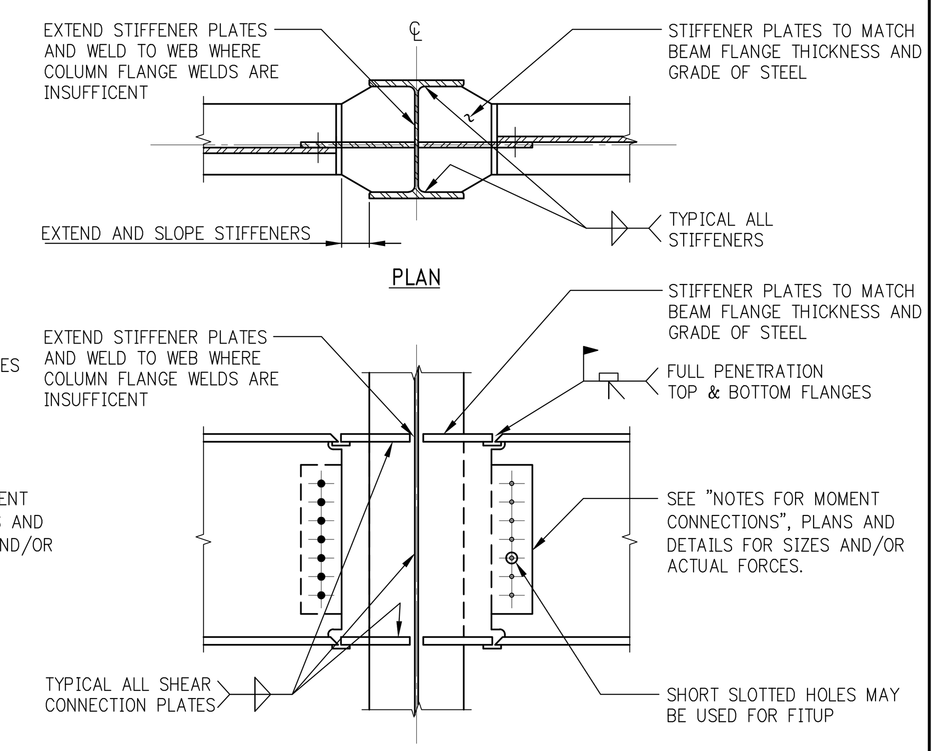

BEAM FLANGES WELDED DIRECTLY TO COLUMN WEB STIFFENERS

KEY PLAN:

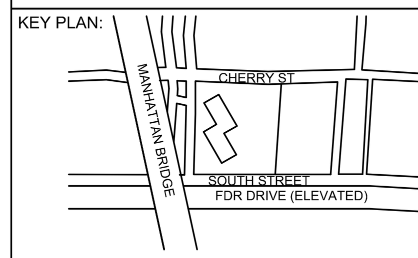

PROJECT NORTH

TRUE NORTH

DEVELOPER:
EXTELL DEVELOPMENT COMPANY
805 Third Ave, 7th Floor
New York, NY 10022
TEL: 212-712-6000 FAX: 212-712-6100

ARCHITECT OF RECORD:
AAI ARCHITECTS, P.C.
14 Wall Street, 2nd Floor
New York, NY 10005
TEL: 212-964-4040 FAX: 212-964-4090

INTERIOR DESIGNER:
MEYER DAVIS
180 Varick St, suite 404
New York, NY 10014
TEL: 212-627-5574

LANDSCAPE DESIGNER:
WEST 8 URBAN DESIGN & LANDSCAPE ARCHITECTURE P.C.
333 Hudson Street, Suite 905
New York, NY 10013
TEL: 212-285-0088 FAX: 212-285-0228

STRUCTURAL ENGINEERS:
WSP
228 East 45th Street
New York, NY 10017
TEL: 212-687-9888 FAX: 646-487-5501

MEP ENGINEERS:
ICOR ASSOCIATES, LLC
485 C Route 1 South, Suite 200
Iseline, NJ 08830
TEL: 908-272-3300 FAX: 908-272-4440

GEOTECHNICAL ENGINEERS:
LANGAN ENGINEERING & ENVIRONMENTAL SERVICES
21 Penn Plaza - 360 West 31st Street, 8th Floor
New York, NY 10001
TEL: 212.479.5400 FAX: 212.479.5444

No.	DESCRIPTION:	DATE:
1	50% DD	08-01-14
2	DESIGN DEVELOPMENT	10-07-14
3	STEEL BID PACKAGE	02-24-15
4	ISSUED FOR FILING	03-26-15

Discrepancies must be reported immediately to the Architect before proceeding. Only figured dimensions are to be used. Contractors must check all dimensions on site. This drawing is protected by copyright.

ALL DIMENSIONS ARE SHOWN IN IMPERIAL.

CONSULTANT:
AAI ARCHITECTS, P.C.

PROJECT:
250 SOUTH STREET
NEW YORK, NY

DRAWING TITLE:
TYPICAL STEEL SUPERSTRUCTURE DETAILS 1

SEAL & SIGNATURE:
STATE OF NEW YORK · AHMAD RAHIMIAN · No. 065537 · LICENSED PROFESSIONAL ENGINEER

DATE:	07/25/14
PROJECT No:	1302510
DRAWN:	CADD
CHK:	CL
SCALE:	N.T.S.
REV:	
DWG No:	**S-960.00**
DOB PAGE No:	of

DOB EMPLOYEE STAMP:
Damian Titus
Buildings
APPROVED
Under Directive 2 of 1975
Date: 05/21/2015:
NYC Development Hub

DOB B-SCAN:

FILE NAME:
PLOT DATE:

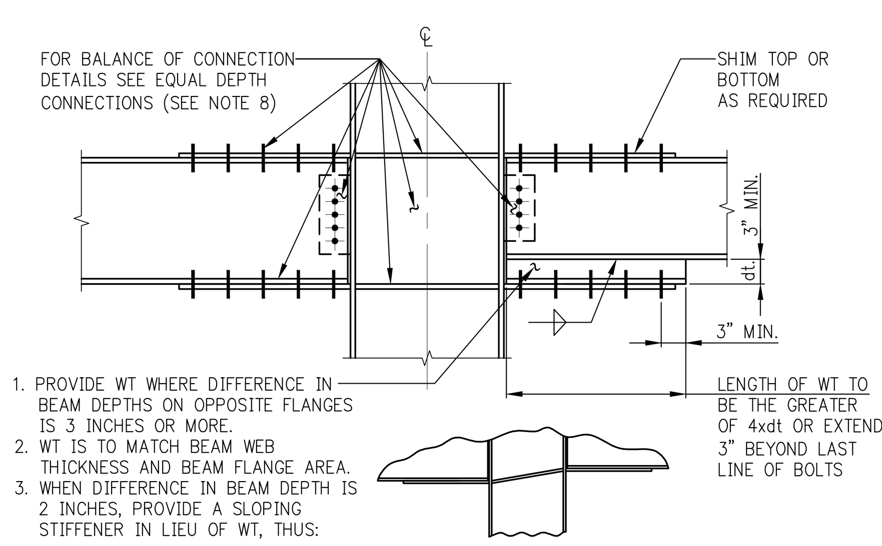

1. PROVIDE WT WHERE DIFFERENCE IN BEAM DEPTHS ON OPPOSITE FLANGES IS 3 INCHES OR MORE.
2. WT IS TO MATCH BEAM WEB THICKNESS AND BEAM FLANGE AREA.
3. WHEN DIFFERENCE IN BEAM DEPTH IS 2 INCHES, PROVIDE A SLOPING STIFFENER IN LIEU OF WT, THUS:

BEAM TO COLUMN FLANGE WITH DIFFERENT BEAM DEPTHS

(BEAM TO COLUMN WEB SIMILAR SEE EQUAL DEPTH CONNECTIONS)

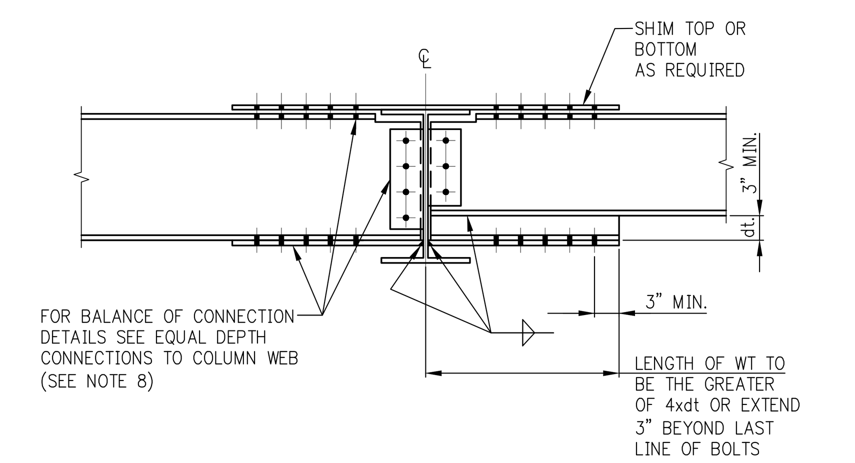

BEAM TO BEAM WITH DIFFERENT DEPTHS

TERMINOLOGY AND LEGEND FOR L.L.R.S. FRAMES

1. "L.L.R.S." MEANS "LATERAL LOAD RESISTING SYSTEM" (USUALLY THIS NOMENCLATURE DOES NOT APPEAR ON FRAMES OR ON INDIVIDUAL MEMBERS).
2. "W.F." IS A WIND/SEISMIC LATERAL LOAD RESISTING FRAME ON THE STRUCTURE'S PERIMETER, INTERIOR, OR CORE. (COLUMNS, GIRDERS, BEAMS, TRUSSES, BRACES, ETC.).
3. "W.G." IS A WIND/SEISMIC GIRDER: AN INDIVIDUAL MEMBER, COMPONENT OF A WIND/SEISMIC L.L.R.S.
4. [symbol] = A MOMENT CONNECTION, TYPE A OR TYPE B.
   OR:
5. MC [symbol] MC = A MOMENT CONNECTION, TYPE A OR TYPE B.
6. TYPE A MOMENT CONNECTION:
   PART OF A LATERAL LOAD RESISTING SYSTEM, THIS CONNECTION HAS THE MOST STRINGENT REQUIREMENTS – IT MUST DEVELOP THE FULL MOMENT CAPACITY OF THE GIRDER AND PROVIDE THE GREATER SHEAR CAPACITY REQUIRED TO RESIST SHEAR FORCES GENERATED BY COMBINED GRAVITY PLUS LATERAL LOADS. (SEE TYPE A SHEAR CONNECTION DETAILS).
7. TYPE B MOMENT CONNECTION:
   ALL OTHERS, SUCH AS: CANTILEVERS, STIFFENING OF MEMBERS TO REDUCE DEFLECTIONS, ETC. A DESIGN MOMENT LESS THAN FULL MOMENT CAPACITY MAY BE INDICATED ON THE FRAMING PLANS, IN WHICH CASE THE CONNECTION MAY BE DESIGNED FOR THIS VALUE. IF NO MOMENT IS GIVEN, THE CONNECTION MUST BE DESIGNED FOR FULL MOMENT CAPACITY. (SEE SIMPLE SHEAR CONNECTION DETAILS).

NOTES FOR MOMENT CONNECTIONS

1. *CONNECTIONS FOR ALL MEMBERS DESIGNATED AS PART OF A LATERAL LOAD RESISTING SYSTEM (W.F OR W.G.)SHALL BE TYPE A MOMENT CONNECTIONS (SEE LEGEND FOR DEFINITION AND REQUIREMENTS).
2. * SHEAR CONNECTIONS SHALL CONFORM TO "TABLE A –– SHEAR CONNECTION REQUIREMENTS FOR TYPE A MOMENT CONNECTIONS".
3. ALL OTHER SHEAR CONNECTIONS (INCLUDING THOSE AT TYPE B MOMENT CONNECTIONS) SHALL CONFORM TO "SIMPLE SHEAR CONNECTION DETAILS".
4. WELDS AND BOLTS FOR MOMENT CONNECTIONS SHALL DEVELOP THE FULL MEMBER MOMENT CAPACITY, EXCEPT AT A TYPE B CONNECTION WHERE A LESSER MOMENT VALUE IS INDICATED ON THE FRAMING PLANS. (THIS MAY ONLY BE UTILIZED AT A TYPE B CONNECTION).
5. MOMENT CONNECTION PLATES SHALL BE SIZED AS REQUIRED FOR THE SPECIFIED MOMENT.
6. WELD SMAY BE SUBSTITUTED FOR BOLTS UPON PRIOR APPROVAL OF THE STRUCTURAL ENGINEER.
7. PROVIDE WEB AND/OR FLANGE REINFORCING WHERE REQUIRED DUE TO WEB CUTS OR COPES FOR CONNECTIONS.
8. PER THE PROVISIONS OF CHAPTER J OF THE AISC SPECIFICATIONS, PROVIDE COLUMN FLANGE STIFFENERS WHERE REQUIRED TO RESIST FORCES FROM MOMENT CONNECTIONS. PROVIDE COLUMN WEB DOUBLER PLATES AS REQUIRED FOR UNBALANCED MOMENT. (AT CONTRACTOR'S OPTION A HEAVIER COLUMN MAY BE SUBSTITUTED IN LIEU OF DOUBLER/STIFFENER PLATES, AT NO COST TO THE OWNER.
9. SLIP–CRITICAL BOLTS USED IN ALL MOMENT CONNECTIONS SHALL HAVE A MINIMUM DIAMETER OF 7/8" AND SHALL BE BASED UPON BOLT VALUES GIVEN IN TABLE 7–4, "SLIP–CRITICAL CONNECTIONS", WHERE "SLIP IS A STRENGTH LIMIT–STATE", CLASS A FAYING SURFACE (13TH EDITION OF AISC MANUAL).
10. IF THE FABRICATOR PROPOSES TO USE CLASS B FAYING SURFACE AND GREATER BOLT CAPACITY THAN TABLE 7–4 VALUES, HE MUST SUBMIT HIS PROPOSED DESIGN AND FABRICATION PROCEDURES TO THE ENGINEER FOR PRIOR APPROVAL.
11. *PROVIDE A MINIMUM OF 3/4 INCH DIAMETER SHEAR STUDS AT 12 INCHES ON CENTER ALONG THE FULL LENGTH OF THE TOP FLANGE OF ALL W.F./W.G. MEMBERS. IF FRAMING PLANS CALL FOR A NUMBER OF STUDS GREATER THAN ONE PER FOOT OF LENGTH, PROVIDE THE GREATER NUMBER. *THESE NOTES (NUMBERS 1,2, AND 11) APPLY TO L.L.R.S. FRAMES. BALANCE OF NOTES APPLY TO ALL MOMENT CONNECTIONS, BOTH TYPE A AND TYPE B.

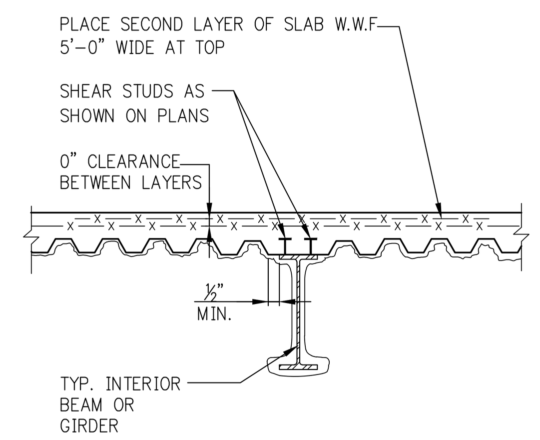

METAL DECK PARALLEL TO FLOOR BEAMS OR GIRDERS

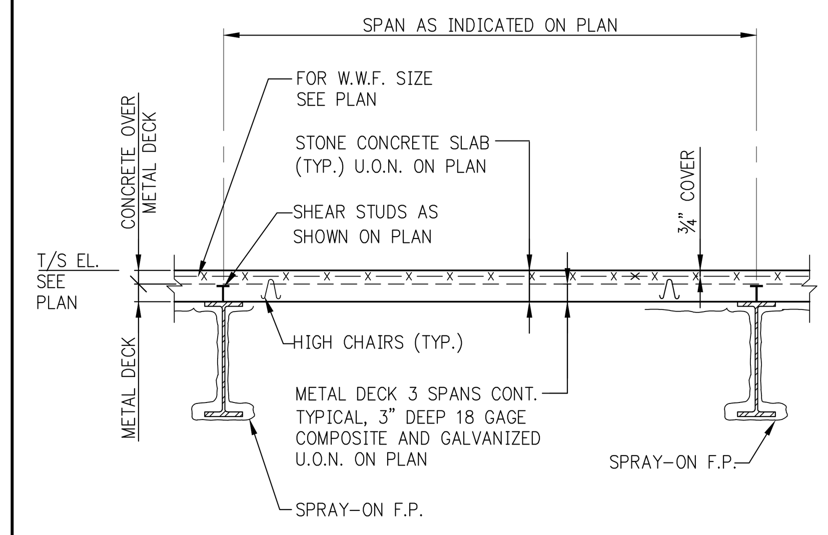

NOTE: ALL SINGLE SPAN DECK MUST BE SHORED.

METAL DECK PERPENDICULAR TO FLOOR BEAMS OR GIRDERS

TYPICAL FLOOR CONSTRUCTION

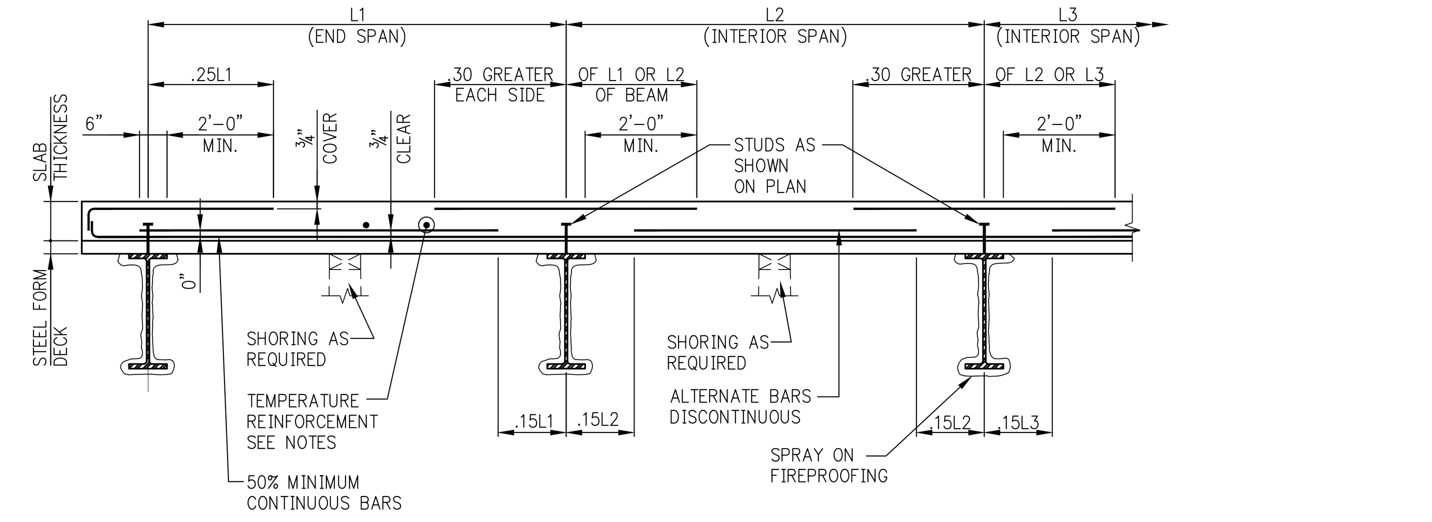

CONCRETE SLAB REINFORCEMENT DETAILS ON STEEL FORM DECK

NOTES:

1. FOR STEEL FORM DECK TYPE, DEPTH, GAGE, YIELD STRESS, PROTECTIVE COATING, ETC. SEE FRAMING PLANS AND NOTES.
2. THESE DETAILS ARE APPLICABLE TO REINFORCED CONCRETE SLAB PLACED ON STEEL FORM DECK SEE PLANS FOR LOCATIONS.
3. SLAB REINFORCEMENT INTERRUPTED BY AN OPENING IN THE SLAB SHALL BE COMPENSATED FOR BY PLACING ONE HALF OF THE REINFORCEMENT TERMINATED ON EACH SIDE OF THE OPENING. REINFORCEMENT SHALL EXTEND FOR FULL LENGTH OF SPAN.
4. PROVIDE 2–#4 TOP AND BOTTOM ADDITIONAL BARS AT ALL FOUR SIDES OF ALL SLAB OPENINGS. LENGTH OF BARS TO BE EQUAL TO OPENING PLUS FIVE FEET.
5. PROVIDE #4@12 TOP REINFORCEMENT OVER ALL STEEL FRAMING MEMBERS (GIRDERS) WHICH ARE PARALLEL TO THE SPAN DIRECTION OF THE SLAB. BARS TO EXTEND 2'–0" FROM EDGE OF GIRDER FLANGE ON EACH SIDE OF GIRDER.
6. HOOK ALL TOP BARS AT DISCONTINUOUS ENDS, I.E. FACE OF CANTILEVERS, EDGE OF SLAB, OPENINGS, ETC.
7. SLAB TEMPERATURE REINFORCEMENT SHALL BE #4@18 FOR SLAB THICKNESS UP TO 6", #4@12 FOR SLAB THICKNESS BETWEEN 6"+ AND 9", #4@9" BETWEEN 9"+ AND 12".

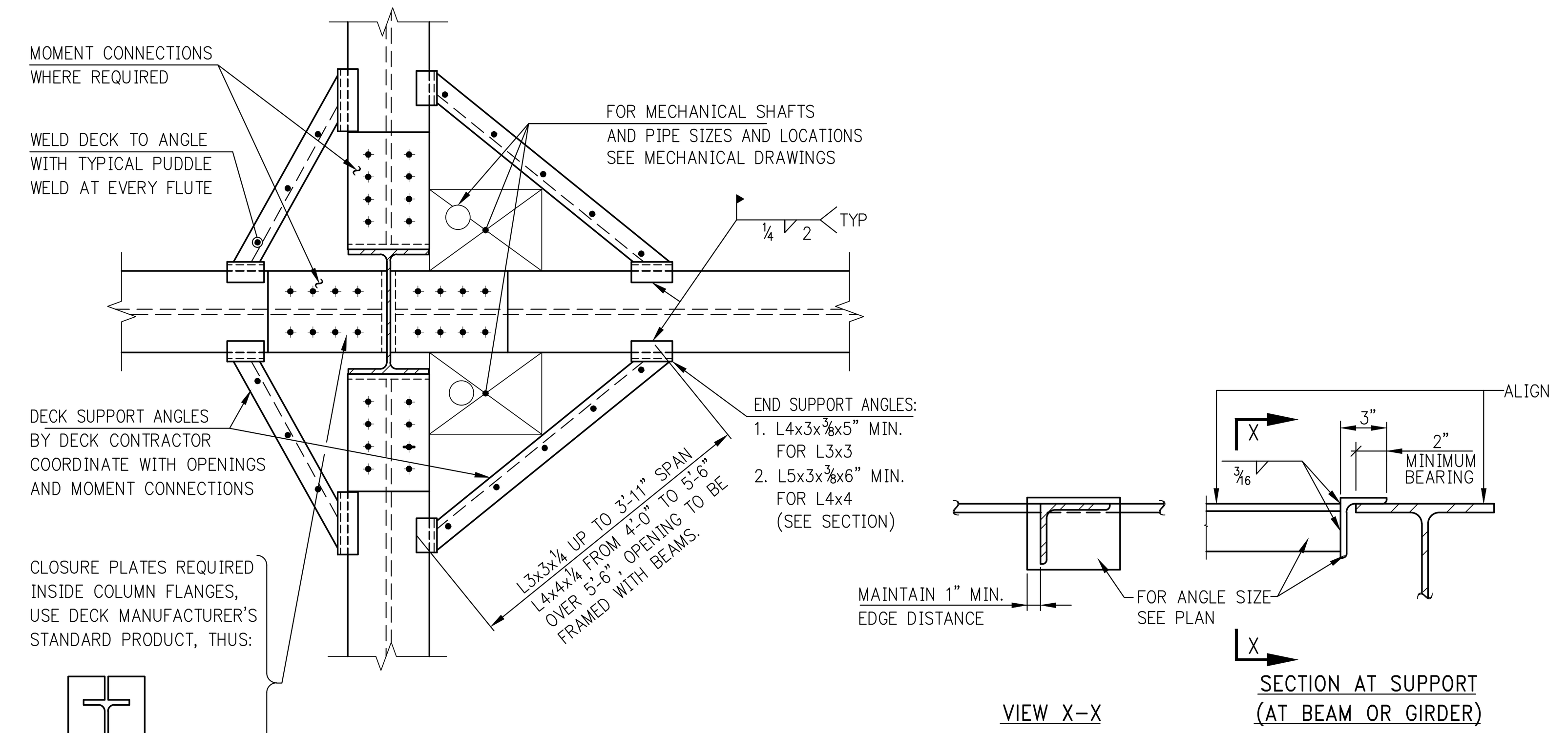

DECK SUPPORT AT COLUMNS

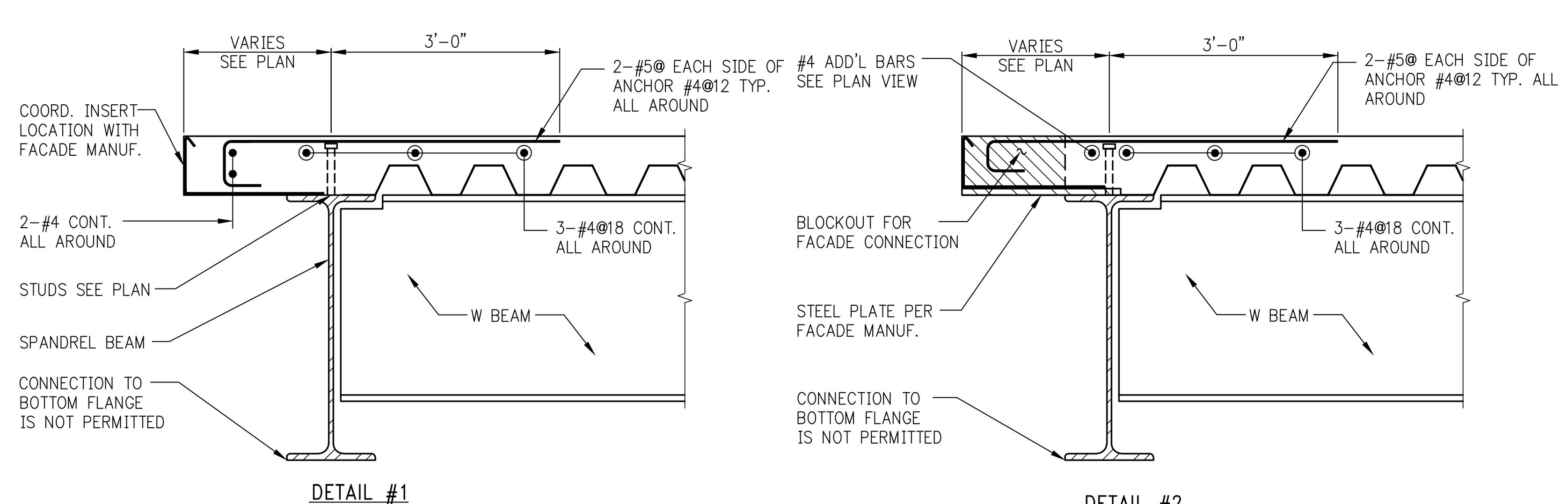

DETAIL #1
(WHERE FACADE ANCHOR IS EMBEDDED INTO SLAB)
(REBAR TO BE COORDINATED WITH INSERT LOCATION)

DETAIL #2
(WHERE FACADE ANCHOR IS SET INTO SLAB BLOCKOUT)
(REBAR TO BE COORDINATED WITH BLOCKOUT LOCATION)

DECK SUPPORT AT PERIMETER

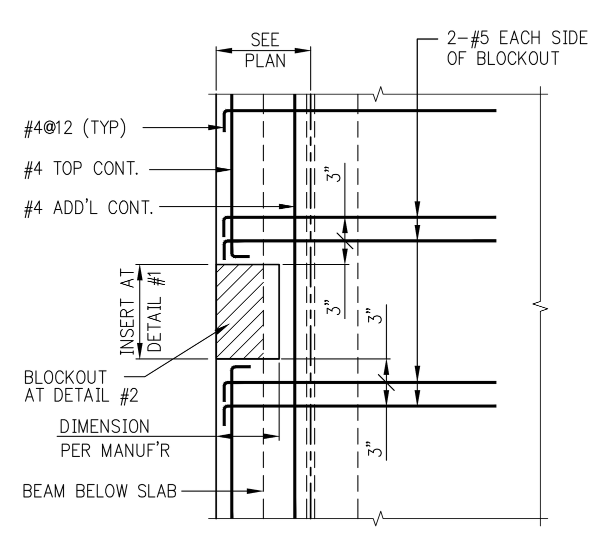

PLAN VIEW AT FACADE ANCHORS

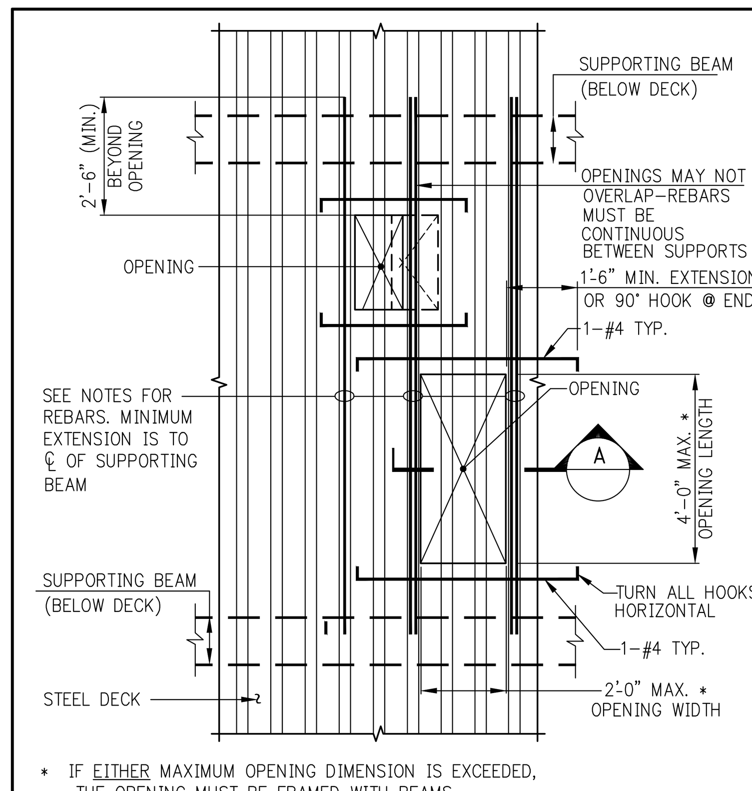

* IF EITHER MAXIMUM OPENING DIMENSION IS EXCEEDED, THE OPENING MUST BE FRAMED WITH BEAMS.

PLAN

NOTES:

1. OPENINGS WHICH ARE DETERMINED BY THE CONTRACTOR TO BE REQUIRED BY JOB CONDITIONS, BUT WHICH ARE NOT SHOWN ON THE STRUCTURAL DRAWINGS, SHALL BE SUBMITTED TO THE ARCHITECT AND STRUCTURAL ENGINEER FOR REVIEW AND APPROVAL.
2. BLOCK OUT OPENING ON TOP OF DECK AND RIBS.
3. DECK IS NOT TO BE CUT WHEN OPENINGS ARE BLOCKED OUT.
4. PLACE REINFORCING BARS IN CONTINUOUS RIBS IMMEDIATELY ADJACENT TO OPENING AND IN TOPPING SLAB PERPENDICULAR TO RIBS.
5. WHEN RIBS ARE SPACED AT 12" OR 8" ON CENTER, REINFORCING REQUIRED = 2–#4 FOR EACH RIB PARTIALLY OR FULLY CUT, PLACE ONE HALF OF REBARS ON EACH SIDE OF OPENING, 2 BARS MAXIMUM PER RIB.
6. WHEN RIBS ARE SPACED AT 6" ON CENTER, REINFORCING REQUIRED = 1–#4 (MINIMUM) FOR EACH RIB PARTIALLY OR FULLY CUT. ADD 1–#4 IF AN ODD NUMBER OF RIBS IS CUT, PLACE ONE HALF OF REBARS ON EACH SIDE OF OPENING, ONE BAR PER RIB.
7. PROVIDE ADEQUATE CHAIRS AND SPACERS TO HOLD REBAR SECURELY IN PLACE DURING PLACEMENT OF CONCRETE.
8. AFTER CONCRETE HAS BEEN PLACED AND HAS ATTAINED AT LEAST 70 PERCENT OF ITS DESIGN STRENGTH, THE BLOCKOUTS MAY BE REMOVED AND THE STEEL DECK MAY BE BURNED OUT AT THE EDGES OF THE OPENING.
9. FOR HOLES UP TO 6" DIAMETER OR 6"x6", REINFORCING WILL NOT BE REQUIRED.

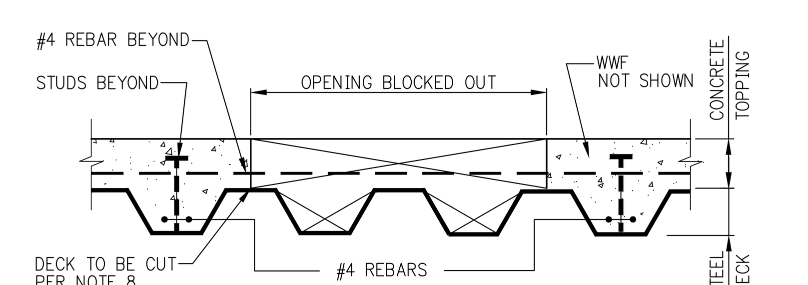

SECTION A

OPENING IN COMPOSITE SLAB

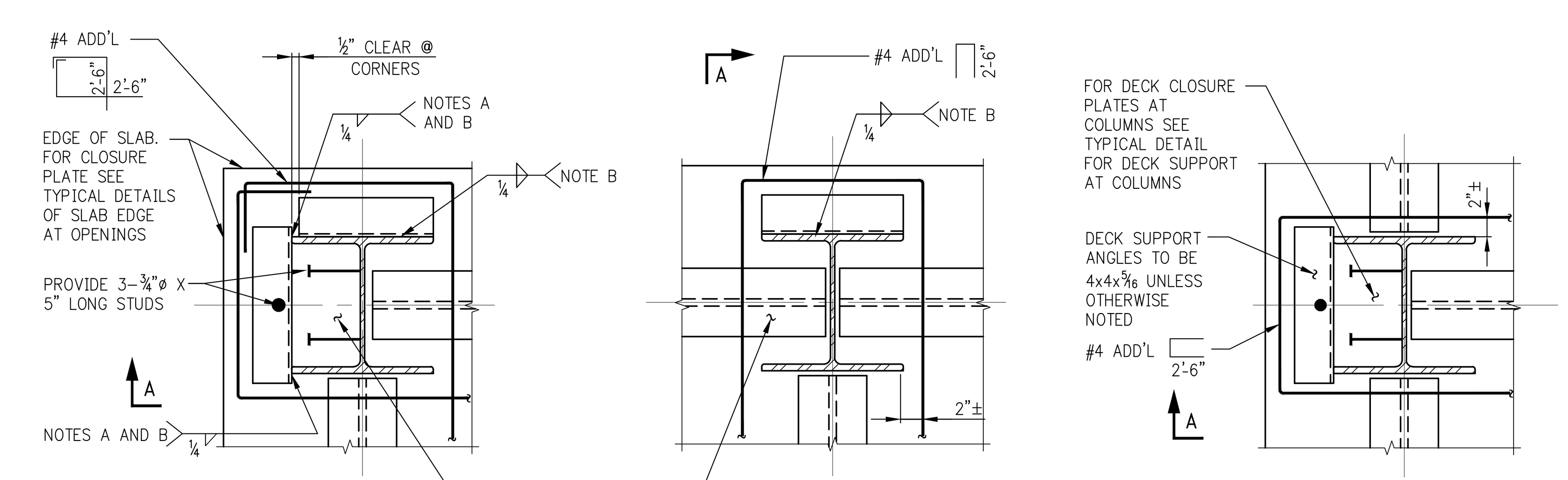

CORNER

EDGE PARALLEL TO FLANGE

EDGE PARALLEL TO WEB

NOTE A:

RETURN WELD AT TOP FOR A DISTANCE EQUAL TO FLANGE THICKNESS

NOTE B:

USE 5/16" WELD AT COLUMN FLANGE OVER ¾" THICK

DECK SUPPORT AT PERIMETER COLUMNS

NOTE:

DECK IS NOT SHOWN. SEE FRAMING PLANS FOR SIZE AND DIRECTION OF SPAN.

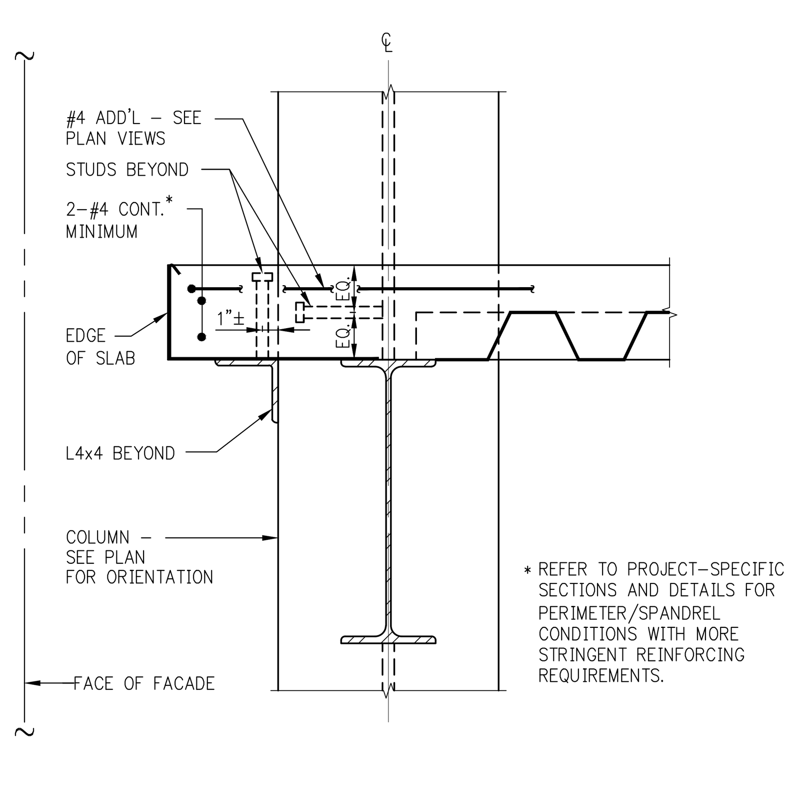

* REFER TO PROJECT–SPECIFIC SECTIONS AND DETAILS FOR PERIMETER/SPANDREL CONDITIONS WITH MORE STRINGENT REINFORCING REQUIREMENTS.

SECTION A

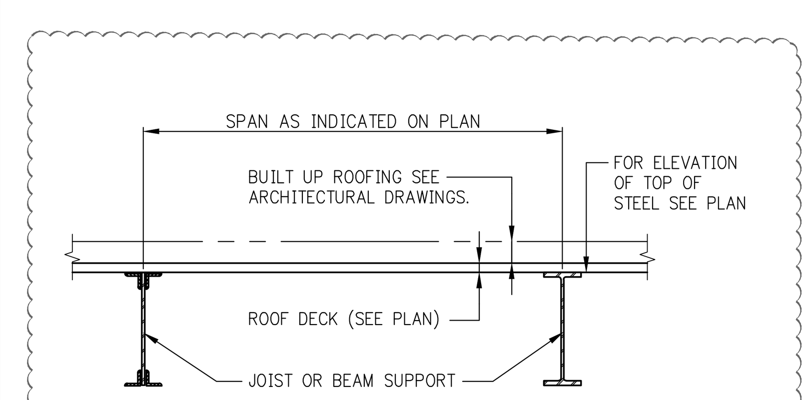

ROOF DECK CONSTRUCTION

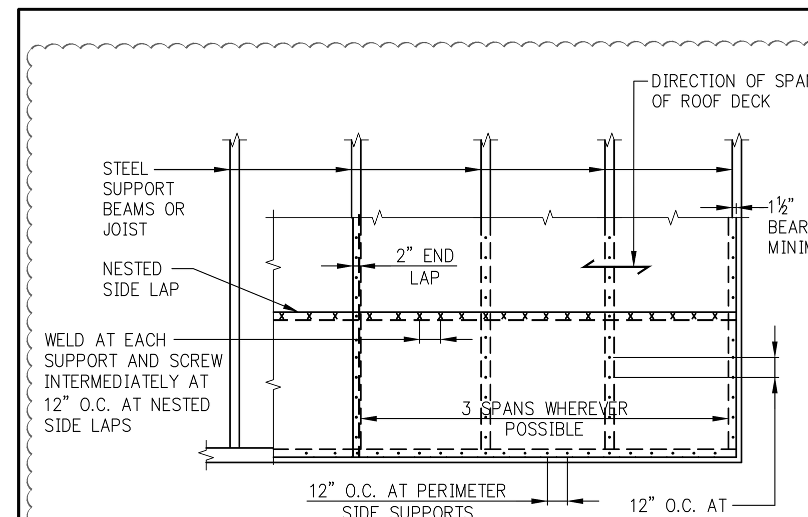

ROOF DECK ATTACHMENT

(ROOF DECK DIAPHRAGM)

LEGEND:

1. x INDICATES #12 SELF–DRILLING SHEET METAL SCREW. (AS AN ALTERNATIVE 1" LONG FILLET WELDS MAY BE USED)
2. • INICATES ⅝" DIAMETER PUDDLE WELD. WELDS TO PENETRATE ALL LAYERS OF DECK AT LAPS AND SHALL HAVE GOOD FUSION TO SUPPORTS. (ALTERNATIVELY, EQUIVALENT POWER ACTUATED FASTENERS MAY BE SUBMITTED FOR APPROVAL BY THE ENGINEER)

KEY PLAN:

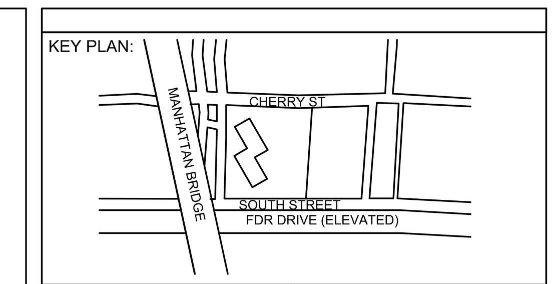

PROJECT NORTH | TRUE NORTH

DEVELOPER:
EXTELL DEVELOPMENT COMPANY
805 Third Ave, 7th Floor
New York, NY 10022
TEL: 212-712-6000 FAX: 212-712-6100

ARCHITECT OF RECORD:
AAI ARCHITECTS, P.C.
14 Wall Street, 2nd Floor
New York, NY 10005
TEL: 212-964-4040 FAX: 212-964-4090

INTERIOR DESIGNER:
MEYER DAVIS
180 Varick St, suite 404
New York, NY 10014
TEL: 212-627-5574

LANDSCAPE DESIGNER:
WEST 8 URBAN DESIGN & LANDSCAPE ARCHITECTURE P.C.
333 Hudson Street, Suite 905
New York, NY 10013
TEL: 212-285-0088 FAX: 212-285-0228

STRUCTURAL ENGINEERS:
WSP
228 East 45th Street
New York, NY 10017
TEL: 212-687-9888 FAX: 646-487-5501

MEP ENGINEERS:
ICOR ASSOCIATES, LLC
485 C Route 1 South, Suite 200
Iseline, NJ 08830
TEL: 908-272-3300 FAX: 908-272-4440

GEOTECHNICAL ENGINEERS:
LANGAN ENGINEERING & ENVIRONMENTAL SERVICES
21 Penn Plaza - 360 West 31st Street, 8th Floor
New York, NY 10001
TEL: 212.479.5400 FAX: 212.479.5444

No.	DESCRIPTION:	DATE:
1	50% DD	08-01-14
2	DESIGN DEVELOPMENT	10-07-14
3	STEEL BID PACKAGE	02-24-15
4	ISSUED FOR FILING	03-26-15

Discrepancies must be reported immediately to the Architect before proceeding. Only figured dimensions are to be used. Contractors must check all dimensions on site. This drawing is protected by copyright.

ALL DIMENSIONS ARE SHOWN IN IMPERIAL.

CONSULTANT: AAI ARCHITECTS, P.C.

PROJECT:
250 SOUTH STREET
NEW YORK, NY

DRAWING TITLE:
TYPICAL STEEL SUPERSTRUCTURE DETAILS 2

SEAL & SIGNATURE: STATE OF NEW YORK · AHMAD RAHIMIAN · No. 065537 · LICENSED PROFESSIONAL ENGINEER

DATE:	07/25/14
PROJECT No:	1302510
DRAWN:	CADD
CHK:	CL
SCALE:	N.T.S.
REV:	
DWG No:	S-961.00
DOB PAGE No:	of

DOB EMPLOYEE STAMP: Damian Titus · Buildings · APPROVED · Under Directive 2 of 1975 · Date: 05/21/2015: · NYC Development Hub

DOB B-SCAN:

DEPT OF BLDGS 121185528 Job Number
ES728636590 Scan Code

30" x 42" Arch E1 - SHEET SIZE

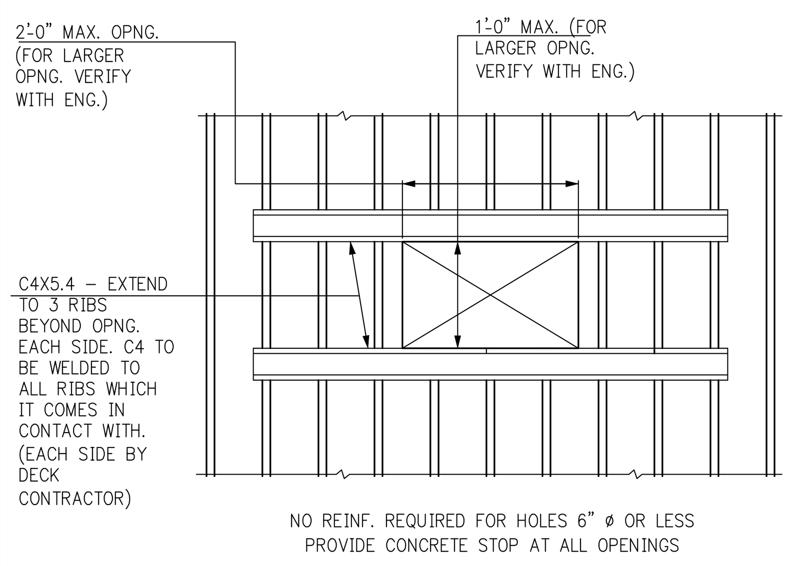

FOR OPENINGS TO 2'-0" PERPENDICULAR TO DECK

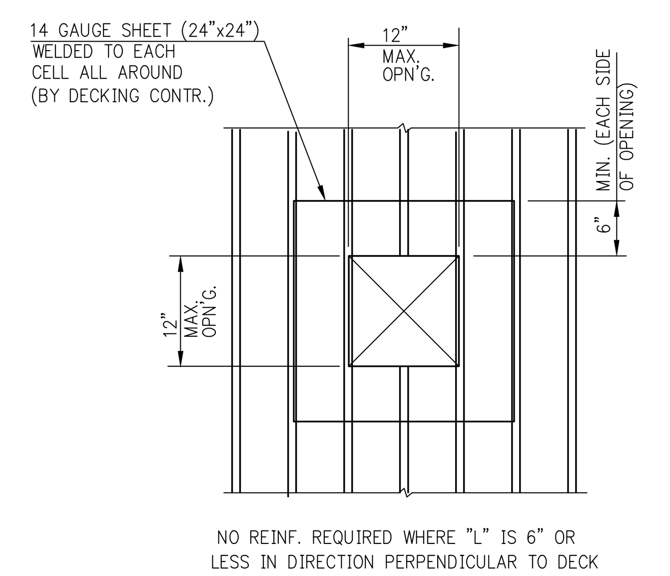

FOR OPENINGS TO 12" PERPENDICULAR TO DECK

TYPICAL FLOOR DETAILS AT OPENINGS

NOTES:
1. FOR OPENING SIZE & LOC. SEE ARCH. & MEP DWG'S.
2. SPACING BETWEEN FLOOR OPENINGS SHOWN TO BE 3'-0" MIN. U.O.N.

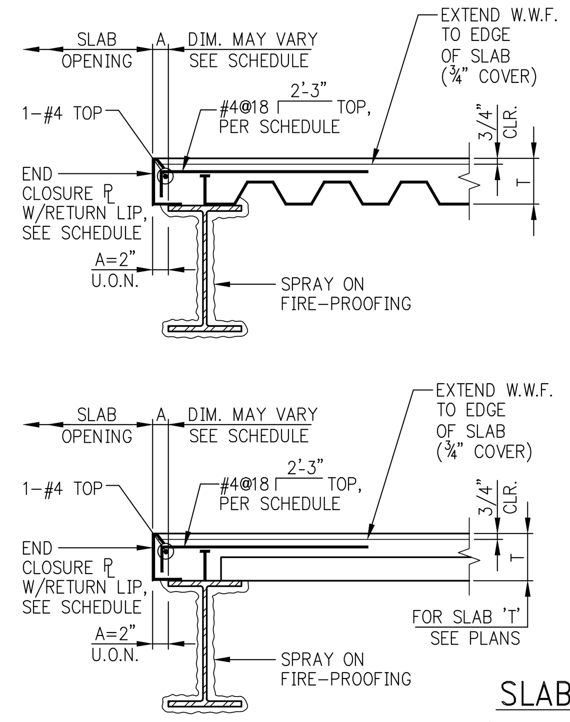

END CLOSURE PLATE SCHEDULE				
T= UP TO AND INCLUDING 6¼"		T= OVER 6¼", UP TO AND INCLUDING 8"		REMARKS
A	GAGE OF PLATE	A	GAGE OF PLATE	
UP TO 4"	14	UP TO 4"	12	
OVER 4" TO 8"	12	OVER 4" TO 8"	10	FOR A=6" OR GREATER PROVIDE #4@18 TOP
OVER 8" TO 10"	10			PROVIDE #4@18 TOP

NOTES:
1. CLOSURE TO BEAR 2" ON FLANGE OF BEAM
2. WELD CLOSURE TO TOP FLANGE PER MANUFACTURER'S RECOMMENDATIONS.
3. PROVIDE RETURN LIP AT ALL VERTICAL LEGS, 1" FOR 10 GAGE, ¾" FOR 12 GAGE, ½" FOR 14 GAGE.

SLAB EDGES AT INTERIOR OPENINGS

(FOR EXTERIOR SLAB EDGES SEE DETAILS OF PERIMETER CONDITIONS)

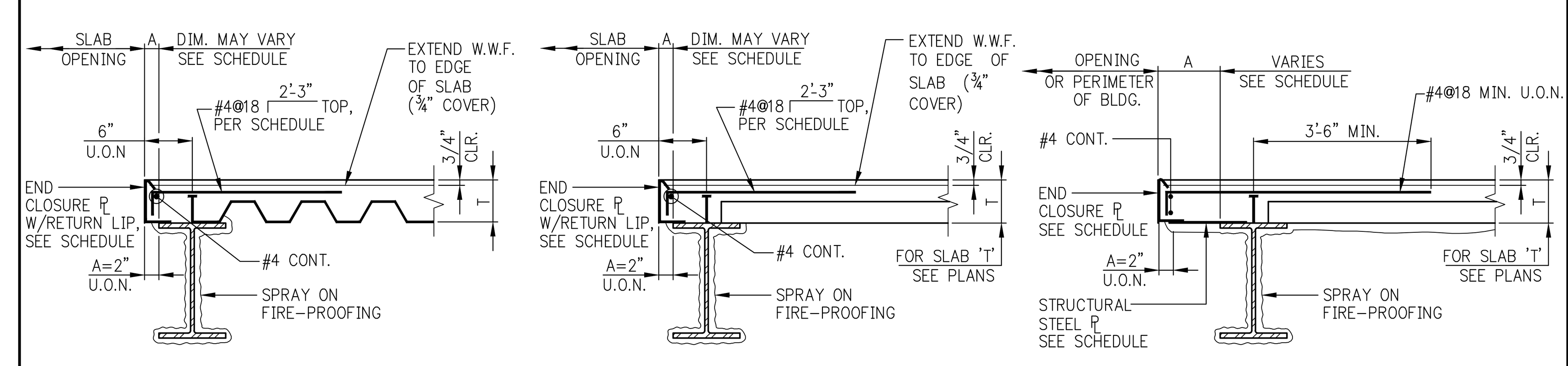

TYPICAL DETAILS OF SLAB EDGE AT OPENING

NOTES:
1. CLOSURE TO BEAR 2" ON FLANGE OF BEAM
2. WELD CLOSURE TO TOP FLANGE PER MANUFACTURER'S RECOMMENDATIONS.
3. PROVIDE RETURN LIP AT ALL VERTICAL LEGS, 1" FOR 10 GAGE, ¾" FOR 12 GAGE, ½" FOR 14 GAGE.
4. IF 'A' EXCEEDS DIMENSIONS SHOWN ABOVE, REINFORCE POUR STOP WITH STIFFENERS OR SHORE UP THE EDGE OF SLAB DURING POUR.

END CLOSURE PLATE SCHEDULE			
T= UP TO AND INCLUDING 6¼"		T= OVER 6¼", UP TO AND INCLUDING 9"	
A	GAGE OF PLATE	A	GAGE OF PLATE
UP TO 4"	14	UP TO 4"	12
OVER 4" TO 8"	12	OVER 4" TO 8"	10
OVER 8" TO 10"	10	OVER 8" TO 12"	¼" THICK PL
10" TO 14"	3/16"	OVER 12" TO 15"	⅜" THICK PL
14" TO 18"	1/4"		

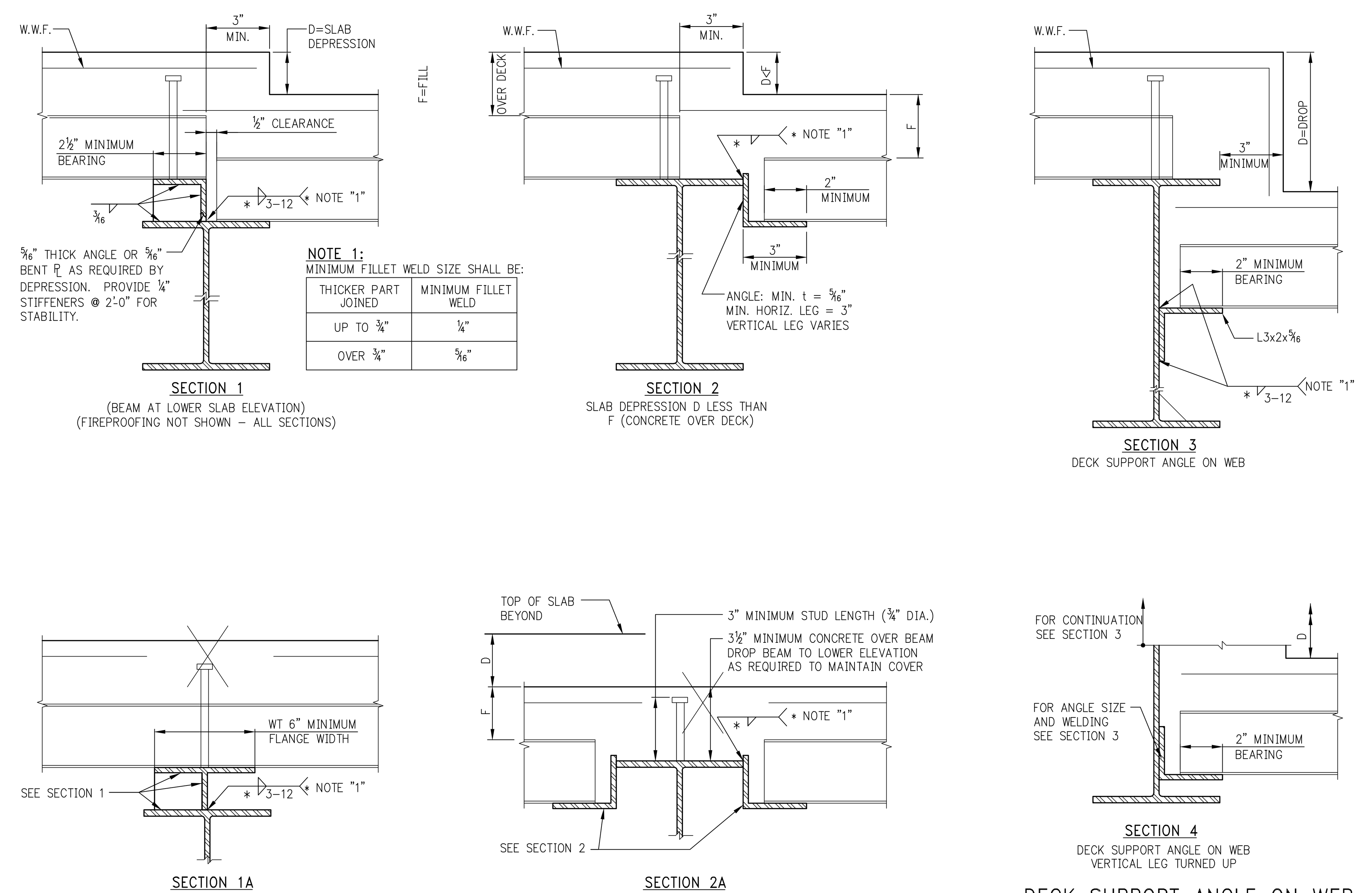

NOTE 1:
MINIMUM FILLET WELD SIZE SHALL BE:

THICKER PART JOINED	MINIMUM FILLET WELD
UP TO ¾"	¼"
OVER ¾"	5/16"

DECK SUPPORT ANGLE ON WEB

SLAB DEPRESSIONS ON STEEL DECK

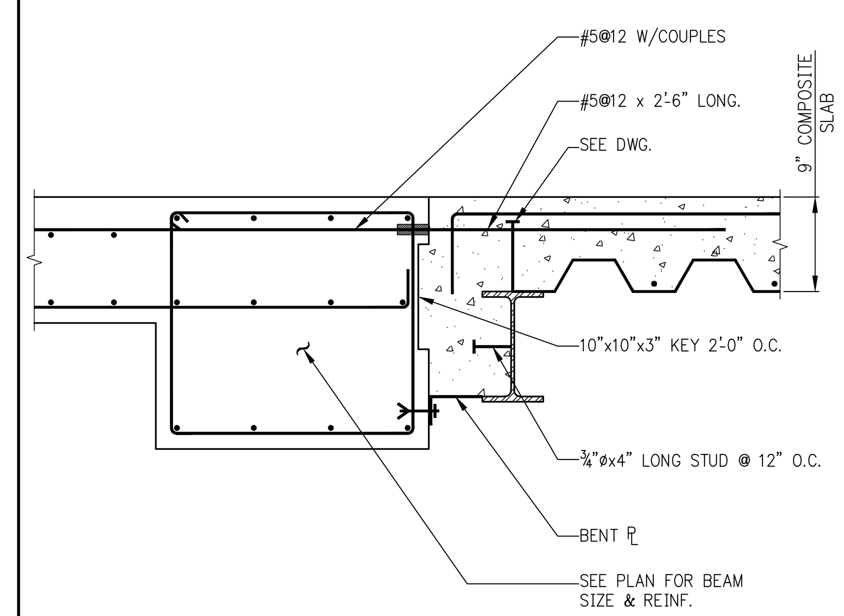

TYPICAL DETAIL – CONCRETE SLAB TO COMPOSITE SLAB CONNECTION

SCALE: 1"= 1'-0"

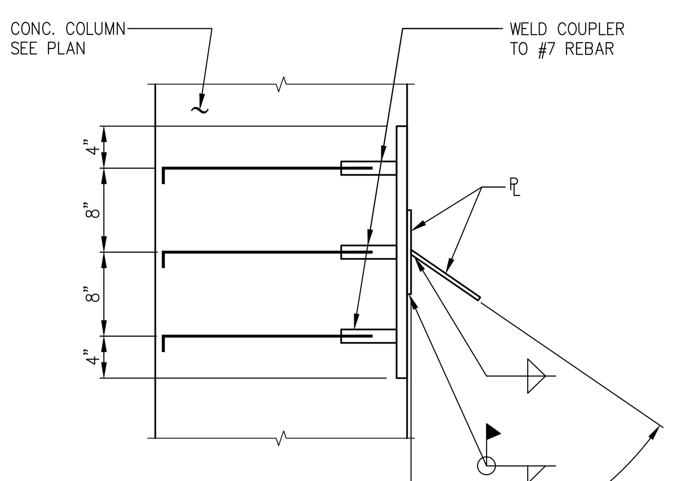

PLAN

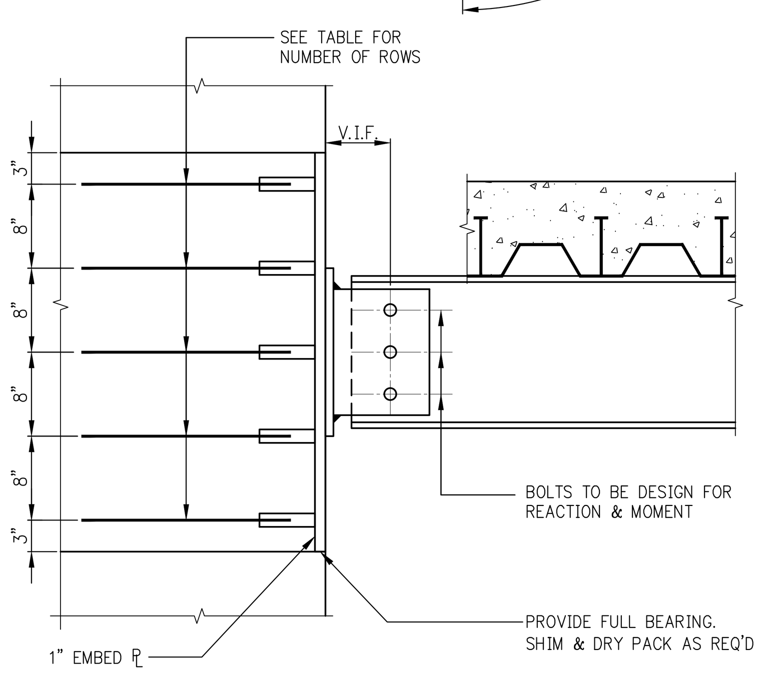

ELEVATION

TYPE	ROW
1	4
2	5
3	6
4	7

TYPICAL DETAIL STEEL BEAM TO CONCRETE COLUMN CONNECTION

SCALE: 1"= 1'-0"

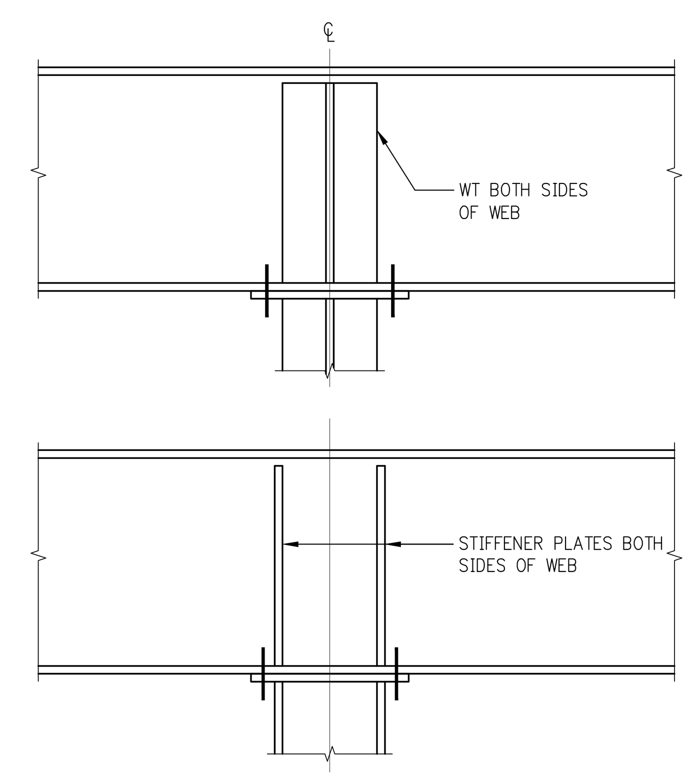

BEAM CONTINUOUS OVER COLUMN

NOTE:
ALL DETAILS OF WT AND STIFFENER PLATES ARE SAME AS FOR COLUMN PICK-UP, BUT INVERTED.

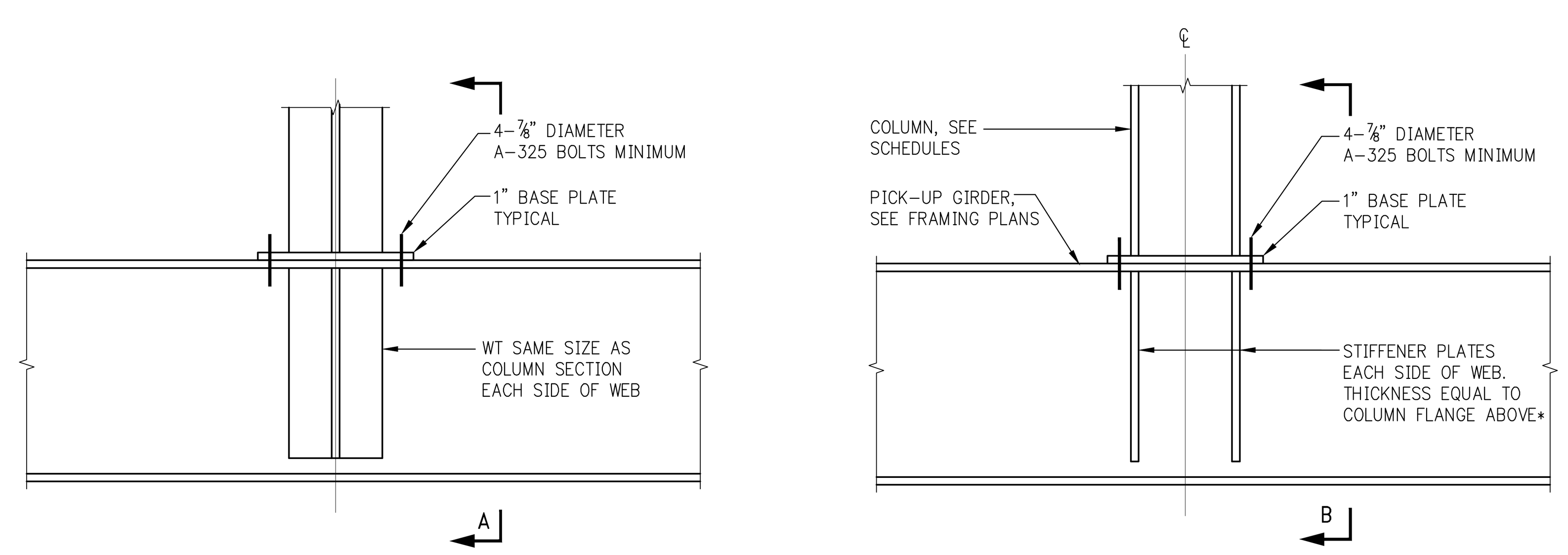

COLUMN OR POST PICK-UP

NOTE:
WT AND STIFFENER PLATES TO BE SAME GRADE OF STEEL AS COLUMN.

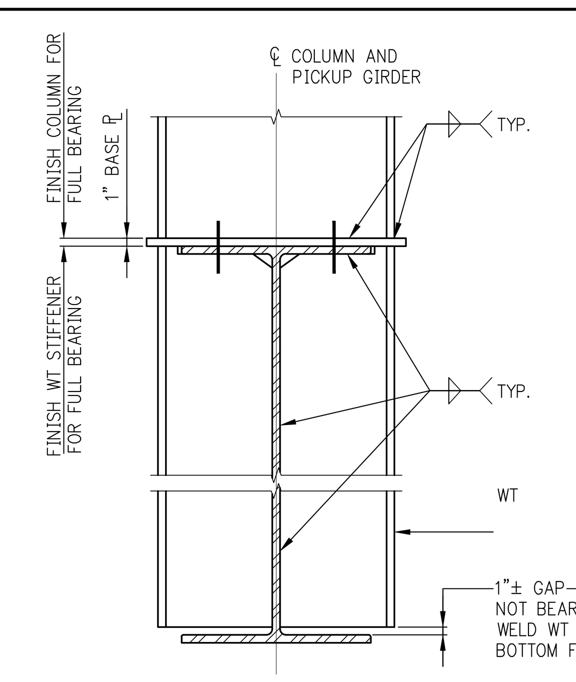

SECTION A

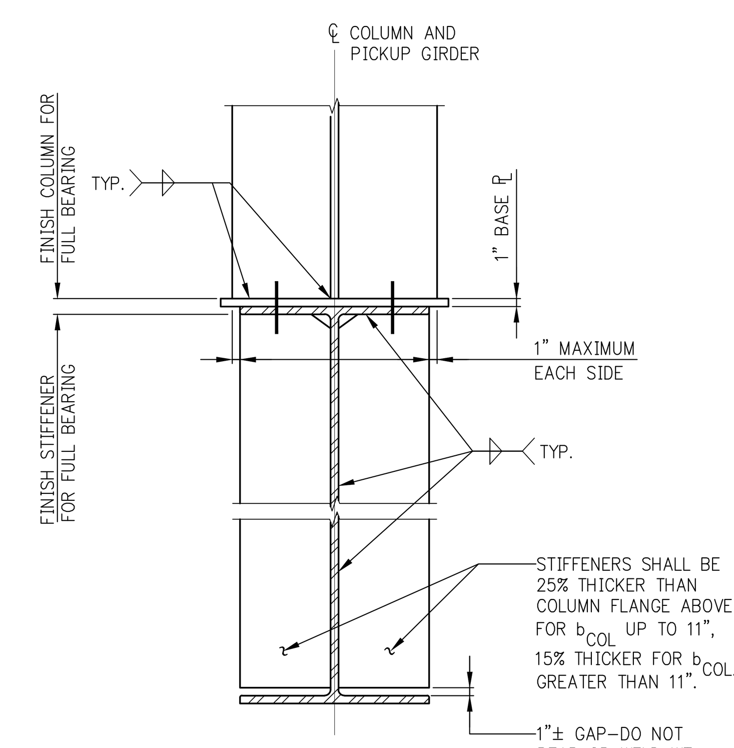

SECTION B

FILE NAME:
PLOT DATE:

KEY PLAN:

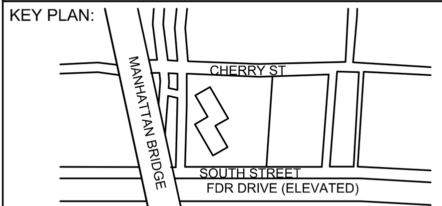

PROJECT NORTH
TRUE NORTH

DEVELOPER:
EXTELL DEVELOPMENT COMPANY
805 Third Ave, 7th Floor
New York, NY 10022
TEL: 212-712-6000 FAX: 212-712-6100

ARCHITECT OF RECORD:
AAI ARCHITECTS, P.C.
14 Wall Street, 2nd Floor
New York, NY 10005
TEL: 212-964-4040 FAX: 212-964-4090

INTERIOR DESIGNER:
MEYER DAVIS
180 Varick St, suite 404
New York, NY 10014
TEL: 212-627-5574

LANDSCAPE DESIGNER:
WEST 8 URBAN DESIGN & LANDSCAPE ARCHITECTURE P.C.
333 Hudson Street, Suite 905
New York, NY 10013
TEL: 212-285-0088 FAX: 212-285-0228

STRUCTURAL ENGINEERS:
WSP
228 East 45th Street
New York, NY 10017
TEL: 212-687-9888 FAX: 646-487-5501

MEP ENGINEERS:
ICOR ASSOCIATES, LLC
485 C Route 1 South, Suite 200
Iseline, NJ 08830
TEL: 908-272-3300 FAX: 908-272-4440

GEOTECHNICAL ENGINEERS:
LANGAN ENGINEERING & ENVIRONMENTAL SERVICES
21 Penn Plaza - 360 West 31st Street, 8th Floor
New York, NY 10001
TEL: 212.479.5400 FAX: 212.479.5444

No.	DESCRIPTION:	DATE:
1	50% DD	08-01-14
2	DESIGN DEVELOPMENT	10-07-14
3	STEEL BID PACKAGE	02-24-15
4	ISSUED FOR FILING	03-26-15

Discrepancies must be reported immediately to the Architect before proceeding. Only figured dimensions are to be used. Contractors must check all dimensions on site. This drawing is protected by copyright.

ALL DIMENSIONS ARE SHOWN IN IMPERIAL.

CONSULTANT:
AAI ARCHITECTS, P.C.

PROJECT:
250 SOUTH STREET
NEW YORK, NY

DRAWING TITLE:
TYPICAL STEEL SUPERSTRUCTURE DETAILS 3

SEAL & SIGNATURE:
STATE OF NEW YORK · AHMAD RAHIMIAN · LICENSED PROFESSIONAL ENGINEER · No. 065537

DATE:	07/25/14
PROJECT No:	1302510
DRAWN:	CADD
CHK:	CL
SCALE:	N.T.S.
REV:	
DWG No:	**S-962.00**
DOB PAGE No:	of

DOB EMPLOYEE STAMP:
Damian Titus
Buildings
APPROVED
Under Directive 2 of 1975
Date: 05/21/2015:
NYC Development Hub

DOB B-SCAN:

DEPT OF BLDGS121180569 Job Number
ES411186099 Scan Code
30" x 42" Arch E1 - SHEET SIZE

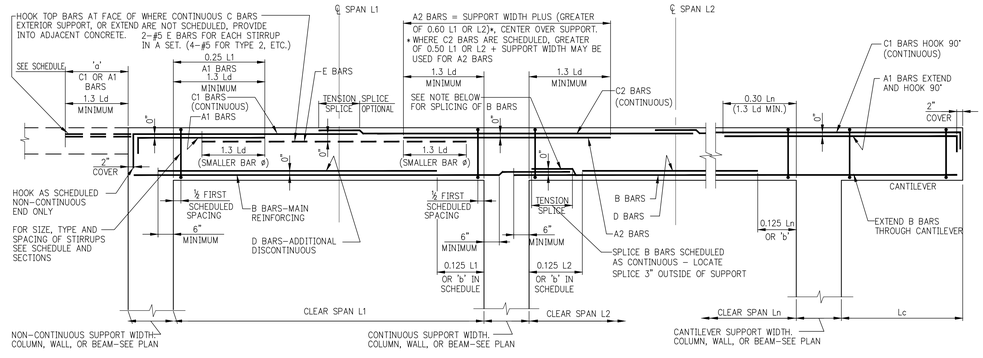

NOTE:
USE TYPICAL CUTOFF LENGTHS SHOWN UNLESS 'a' OR 'b' DIMENSIONS OR OTHER DIMENSIONS ARE GIVEN IN THE BEAM SCHEDULE

TYPICAL BEAM ELEVATION

MINIMUM SHEAR REINFORCEMENT FOR DEEP BEAMS (D > Ln/4)		
b=BEAM WIDTH	MINIMUM STIRRUPS(Av) (SPACING = S)*	MINIMUM F BARS (Avh) (SPACING = S2)*
UP TO 12"	1–#4 ▭ @ 12" MAX.	#4 E.F. @ 12" MAX.
12"+ TO 24"	2–#4 ▭ @ 12" MAX.	#4 E.F. @ 12" MAX.
24"+ TO 36"	3–#4 OR 2–#5 @ 12" MAX.	#5 E.F. @ 12" MAX.
36"+ TO 42"	2–#5 @ 12" MAX.	#6 E.F. @ 12" MAX.
42"+ TO 48"	4–#4 OR 3–#5 @ 12" MAX.	#6 E.F. @ 12" MAX.
OVER 48"	◄ DESIGNER TO PROVIDE ►	

* PER ACI 11.8.4 AND 11.8.5, SPACINGS S AND S2 "SHALL NOT EXCEED D/5, NOR 12 INCHES."

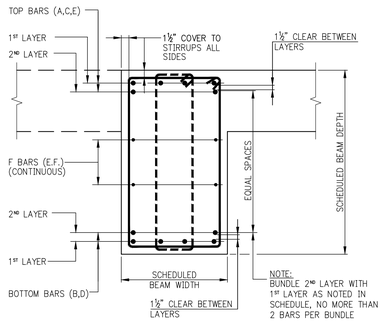

TYPICAL BEAM SECTION

NOTES:

1. WHERE BARS ARE PLACED IN TWO LAYERS THE MINIMUM CLEAR DISTANCE BETWEEN LAYERS SHALL BE 1½".
2. BEAM REINFORCEMENT SHALL BE LOCATED LATERALLY AS REQUIRED TO CLEAR COLUMN VERTICAL REINFORCEMENT.
3. WHERE BEAMS MEET AND CROSS EACH OTHER AT A SUPPORT, THE SHALLOWER BEAM SHALL HAVE ITS TOP REINFORCEMENT PLACED IN THE OUTERMOST (TOP) LAYER.
4. IN THE EVENT ONE CROSSING BEAM IS A CANTILEVER, THE CANTILEVER BEAM SHALL HAVE ITS TOP REINFORCEMENT PLACED IN THE OUTERMOST (TOP) LAYER.
5. WHERE F BARS (FACE OR "SKIN" BARS) ARE INDICATED IN THE BEAM SCHEDULE, THEY SHALL BE UNIFORMLY SPACED ON BOTH BEAM FACES AND SHALL BE CONTINUOUS, WITH STAGGERED TENSION SPLICES.
6. SEE SCHEDULE OF SHEAR REINFORCEMENT FOR DEEP BEAMS (D> Ln/4) FOR MINIMUM STIRRUP AND FACE BAR REQUIREMENTS.
7. THE FIRST STIRRUP AT EACH END SHALL BE PLACED AT ½ THE FIRST SCHEDULED SPACE FROM THE FACE OF SUPPORTING MEMBER. SUBSEQUENT STIRRUPS SHALL BE SPACED AS INDICATED IN THE BEAM SCHEDULE.
8. WHERE MORE THAN ONE STIRRUP IS INDICATED IN A SET, PLACE EACH SET AT THE SCHEDULED SPACING.
9. SCHEDULED STIRRUP SPACING IS THE SAME AT EACH END UNLESS OTHERWISE NOTED.

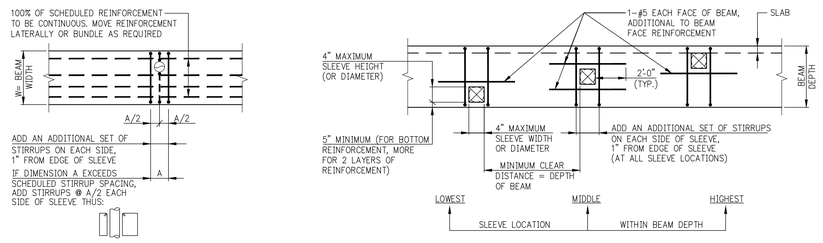

PLAN – VERTICAL SLEEVE IN BEAM

ELEVATION – HORIZONTAL SLEEVES IN BEAM

SLEEVE PENETRATIONS THROUGH BEAMS

NOTES:

1. ALL SCHEDULED BEAM REINFORCEMENT (NOT SHOWN) IS TO BE CONTINUOUS
2. NO OPENINGS LARGER THAN 4" (SQUARE OR ROUND) ARE PERMITTED UNLESS SPECIFICALLY INDICATED ON STRUCTURAL PLANS.

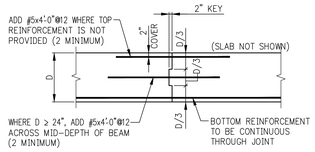

ELEVATION – BEAM CONSTRUCTION JOINT

NOTE:
CONTRACTOR MUST SUBMIT LOCATIONS OF ALL CONSTRUCTION JOINTS TO THE ENGINEER FOR REVIEW PRIOR TO CONSTRUCTION.

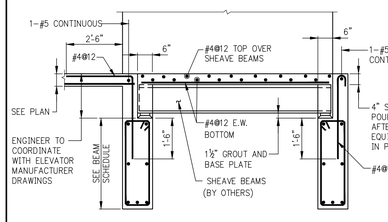

ELEVATOR SHEAVE BEAM

NOTE:
SHEAVE BEAMS TO BE SET BY ELEVATOR CONTRACTOR.

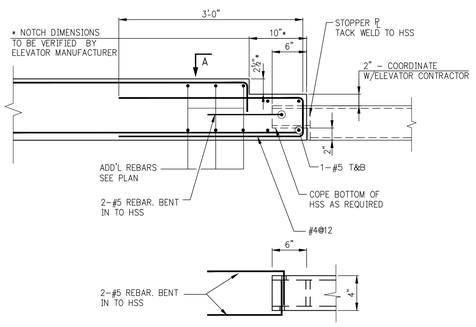

SECTION A

DETAIL @ ELEVATOR

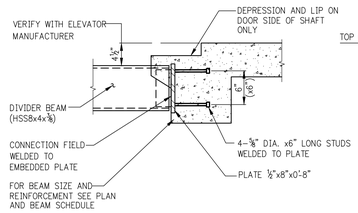

ALTERNATIVE ELEVATOR DIVIDER BEAM CONNECTION

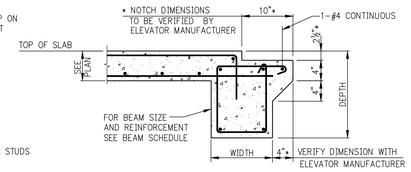

BEAM AT ELEVATOR SILL

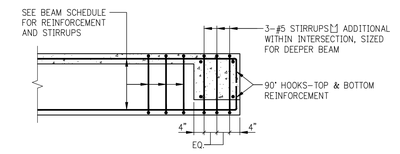

ELEVATION

DEEP BEAM FRAMING INTO SHALLOW BEAM

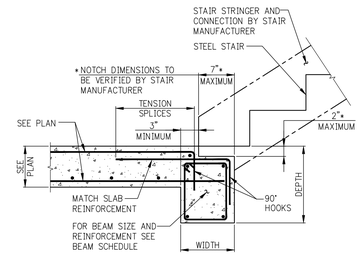

EDGE BEAM AT STEEL STAIR SUPPORT

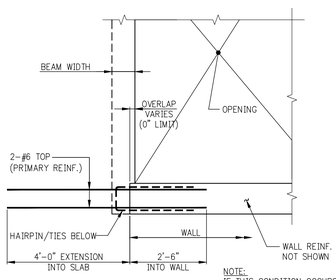

PLAN

NOTE:
IF THIS CONDITION OCCURS AT A COLUMN, PROVIDE 90° HOOKS ON BRACKET REINF. IF EMBEDMENT IS LIMITED.

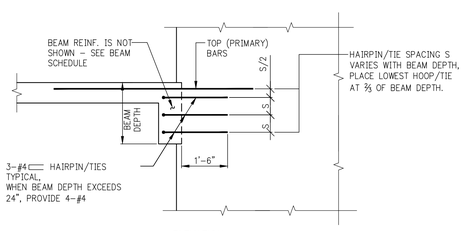

ELEVATION

BEAM SUPPORT BRACKET AT END OF WALL

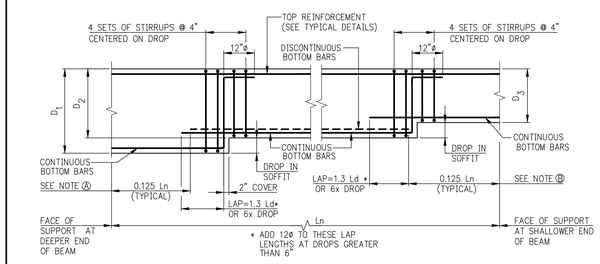

ELEVATION – DROP IN BEAM SOFFIT

(SLAB NOT SHOWN)

NOTE Ⓐ :
IF DISCONTINUOUS BOTTOM BARS ARE CUT OFF WITHIN SPLICE LENGTH OF CONTINUOUS BOTTOM BARS, THEN DISCONTINUOUS BOTTOM BARS NEED NOT BE CONTINUED AT BOTTOM OF DEEPER PORTION OF BEAM (D_1)

NOTE Ⓑ :
IF DROP OCCURS WITHIN TYPICAL CUTOFF OF DISCONTINUOUS BOTTOM BARS, THEN DISCONTINUOUS BOTTOM BARS NEED NOT BE CONTINUED IN SHALLOWER PORTION OF BEAM (D_3)

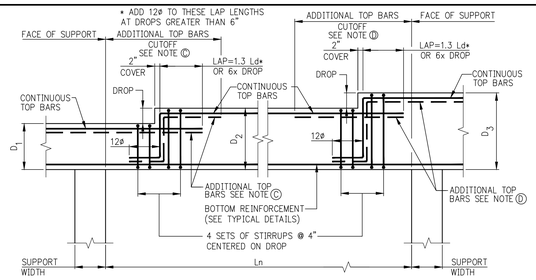

ELEVATION – DROP AT TOP OF BEAM

(SLAB NOT SHOWN)

NOTE Ⓒ :
IF LAP LENGTH OF LOWER ADDITIONAL TOP BARS (D_1) EXTENDS BEYOND THE CUTOFF LENGTH, THEN ADDITIONAL TOP BARS NEED NOT BE PLACED AT TOP OF DEEPER PORTION OF BEAM (D_2)

NOTE Ⓓ :
IF DROP OCCURS BEYOND THE CUTOFF LENGTH OF UPPER LEVEL ADDITIONAL TOP BARS (D_1), THEN ADDITIONAL TOP BARS NEED NOT BE PLACED IN SHALLOWER PORTION OF BEAM (D_2)

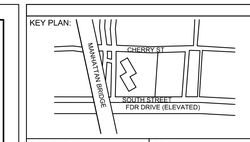

KEY PLAN:

PROJECT NORTH

TRUE NORTH

DEVELOPER:
EXTELL DEVELOPMENT COMPANY
805 Third Ave, 7th Floor
New York, NY 10022
TEL: 212-712-6000 FAX: 212-712-6100

ARCHITECT OF RECORD:
AAI ARCHITECTS, P.C.
14 Wall Street, 2nd Floor
New York, NY 10005
TEL: 212-964-4040 FAX: 212-964-4090

INTERIOR DESIGNER:
MEYER DAVIS
180 Varick St, suite 404
New York, NY 10014
TEL: 212-627-5574

LANDSCAPE DESIGNER:
WEST 8 URBAN DESIGN & LANDSCAPE ARCHITECTURE P.C.
333 Hudson Street, Suite 905
New York, NY 10013
TEL: 212-285-0088 FAX: 212-285-0228

STRUCTURAL ENGINEERS:
WSP
228 East 45th Street
New York, NY 10017
TEL: 212-687-9888 FAX: 646-487-5501

MEP ENGINEERS:
ICOR ASSOCIATES, LLC
485 C Route 1 South, Suite 200
Iselin, NJ 08830
TEL: 908-272-3300 FAX: 908-272-4440

GEOTECHNICAL ENGINEERS:
LANGAN ENGINEERING & ENVIRONMENTAL SERVICES
21 Penn Plaza - 360 West 31st Street, 8th Floor
New York, NY 10001
TEL: 212.479.5400 FAX: 212.479.5444

No.	DESCRIPTION:	DATE:
1	50% DD	08-01-14
2	DESIGN DEVELOPMENT	10-07-14
3	CONCRETE BID PACKAGE	03-06-15
4	ISSUED FOR FILING	03-26-15

Discrepancies must be reported immediately to the Architect before proceeding. Only figured dimensions are to be used. Contractors must check all dimensions on site. This drawing is protected by copyright.

ALL DIMENSIONS ARE SHOWN IN IMPERIAL.

CONSULTANT:
AAI ARCHITECTS, P.C.

PROJECT:
250 SOUTH STREET
NEW YORK, NY

DRAWING TITLE:
TYPICAL CONCRETE SUPERSTRUCTURE DETAILS 1

SEAL & SIGNATURE:
STATE OF NEW YORK – RICHARD RAMUNNO – No. 065527 – LICENSED PROFESSIONAL ENGINEER

DATE:	07/25/14
PROJECT No:	1302510
DRAWN: CADD	REV:
CHK: CL	
SCALE: N.T.S.	
DWG No:	**S-964.00**
DOB PAGE No:	of

DOB EMPLOYEE STAMP:
Damian Titus
NYC Buildings
APPROVED
Under Directive 2 of 1975
Date: 05/21/2015:
NYC Development Hub

DOB B-SCAN:

FILE NAME:
PLOT DATE:

DEPT OF BLDGS121185029 Job Number
E3508774785 Scan Code
30" x 42" Arch E1 - SHEET SIZE

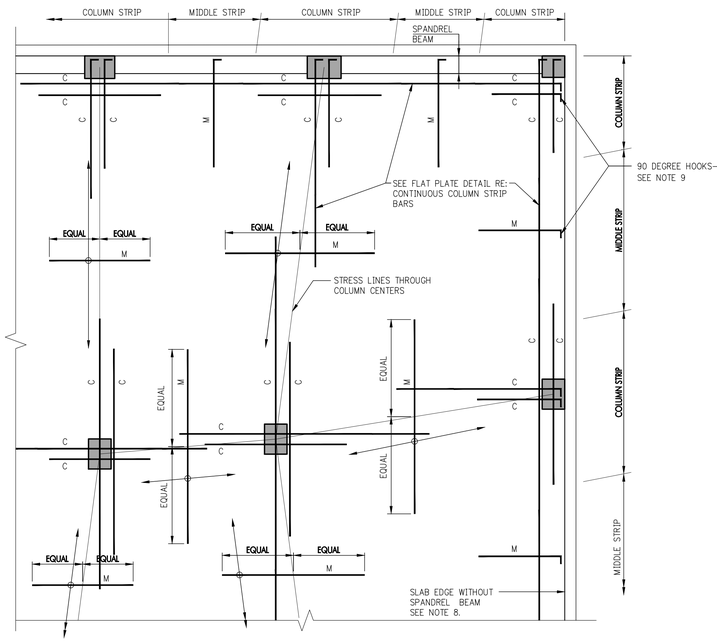

TOP REINFORCEMENT

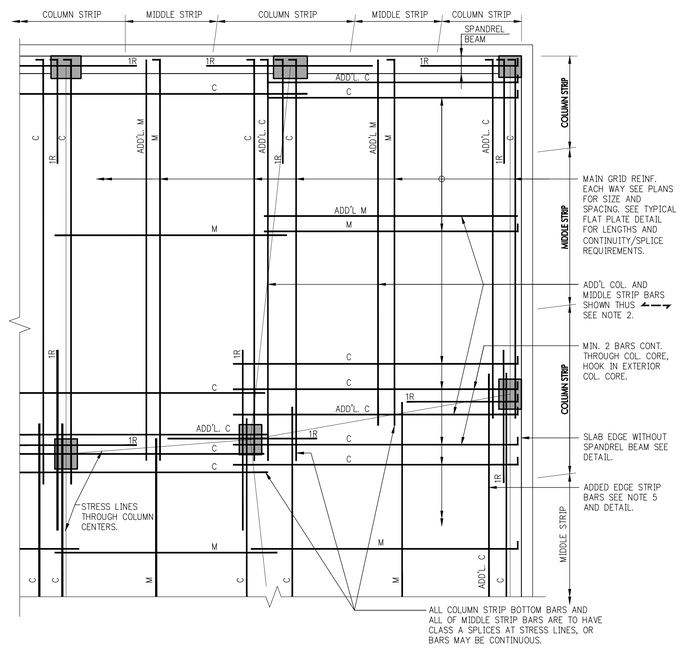

BOTTOM REINFORCEMENT

NOTES FOR TOP REINFORCEMENT

1. 'C' DENOTES COLUMN STRIP BARS (LONG AND SHORT BARS ARE ALTERNATED). 'M' DENOTES MIDDLE STRIP BARS.
2. FOR SIZE, SPACING, NUMBER, ETC. OF REINFORCING BARS, SEE FRAMING PLANS.
3. WHERE COLUMN STRIP BAR LENGTHS ARE SHOWN ON FRAMING PLANS THEY ARE FOR LONGER BARS, WHICH ARE TO BE ALTERNATED WITH SHORTER BARS. SEE TYPICAL FLAT PLATE DETAIL.
4. COLUMN STRIP BARS ARE TO BE CENTERED OVER COLUMNS UNLESS OTHERWISE INDICATED ON PLANS.
5. MIDDLE STRIP BARS ARE TO BE CENTERED OVER STRESS LINES UNLESS OTHERWISE INDICATED ON PLANS.
6. MIDDLE STRIP BARS ARE TO BE SPACED AS SHOWN ON PLANS. FIRST BAR IS TO BE LOCATED A DISTANCE FROM LAST COLUMN STRIP BAR NOT TO EXCEED MIDDLE STRIP BAR SPACING.
7. COLUMN STRIP BARS PARALLEL TO SPANDREL BEAMS ARE TO HAVE FIRST BAR LOCATED AT ONE–HALF SCHEDULED SPACING FROM INSIDE FACE OF BEAM, SIX INCHES MAXIMUM.
8. AT SLAB EDGES WITHOUT SPANDREL BEAMS, SEE TYPICAL DETAIL FOR ADDITIONAL CONTINUOUS EDGE BARS AND FOR COLUMN STRIP BAR PLACEMENT PARALLEL TO SLAB EDGE.
9. PROVIDE 90 DEGREE HOOK AT EVERY DISCONTINUOUS TOP BAR, COLUMN AND MIDDLE STRIPS, AT EDGE OF SLAB, WITH OR WITHOUT SPANDREL BEAMS (2" CLEAR COVER TO HOOK)

BAR LENGTH EXTENSIONS REQUIRED AT EPOXY COATED REINFORCEMENT (WHERE SPECIFIED ON PLANS)
1. TO REINFORCING BAR LENGTHS SHOWN ON PLAN OR AS DETERMINED FROM TYPICAL DETAILS, ADD AN ADDITIONAL LENGTH AT EACH END (EXCEPT AT HOOKED BARS) EQUAL TO 50% OF BAR DEVELOPMENT LENGTH (SEE TABLE #2)
2. DEVELOPMENT LENGTHS AND LAP SPLICE LENGTHS SHOWN ARE TO BE INCREASED, IN CONFORMANCE WITH TABLES 1 & 2 IN TYPICAL DETAILS FOR REINFORCEMENT DEVELOPMENT AND SPLICE LENGTHS, OVER VALUES FOR UNCOATED BARS.

FLAT SLAB REINFORCEMENT DETAILS

NOTES FOR BOTTOM REINFORCEMENT:

1. 'C' DENOTES A COLUMN STRIP BAR, PART OF MAIN GRID. 'ADD'L. C' DENOTES COLUMN STRIP BARS ADDITIONAL TO MAIN GRID BARS. 'M' DENOTES A MIDDLE STRIP BAR, PART OF MAIN GRID. 'ADD'L. M' DENOTES MIDDLE STRIP BARS ADDITIONAL TO MAIN GRID BARS.
2. PLACE ADDITIONAL BARS BETWEEN MAIN GRID BARS. IN COLUMN STRIPS GROUP ABOUT STRESS LINE. IN MIDDLE STRIPS DISTRIBUTE THROUGHOUT STRIP.
3. ALL COLUMN STRIP BOTTOM BARS ARE TO BE CONTINUOUS AND HOOKED 90° AT EDGES OF SLAB OR AT SLAB OPENINGS, OR AT OTHER DISCONTINUITIES.
4. ALL MIDDLE STRIP BOTTOM BARS ARE TO BE CONTINUOUS AND ARE TO EXTEND TO EDGE OF SLAB WHERE 50% OF BARS ARE TO BE HOOKED.
5. IN EDGE STRIP WITHOUT SPANDREL BEAMS START ADDITIONAL BARS TWO INCHES FROM CONTINUOUS EDGE BARS – SEE FLAT PLATE DETAIL AT EDGE OF SLAB.
6. 'IR' DENOTES HORIZONTAL STRUCTURAL INTEGRITY REINFORCEMENT. THE REINFORCEMENT SHALL BE PLACED INSIDE COLUMN CAGE AND SHALL BE EXTENDED ON ALL SIDES OF THE COLUMN INTO ADJACENT SLAB AT LEAST ONE–THIRD OF SPAN LENGTH WHERE REINFORCEMENT CANNOT BE EXTENDED BEYOND THE COLUMN–IT SHALL BE HOOKED

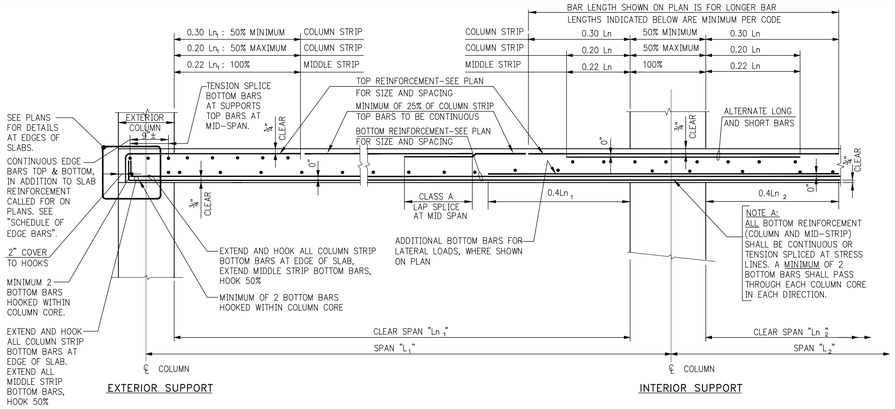

EXTERIOR SUPPORT

INTERIOR SUPPORT

FLAT PLATE DETAIL

(FOR DROP PANEL SEE DETAIL)

AT INTERIOR SUPPORTS USE LARGER OF L_{n_1} OR L_{n_2} FOR Ln

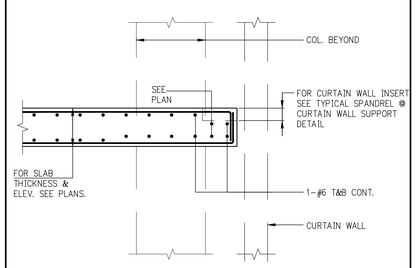

TYPICAL SPANDREL @ EDGE OF SLAB

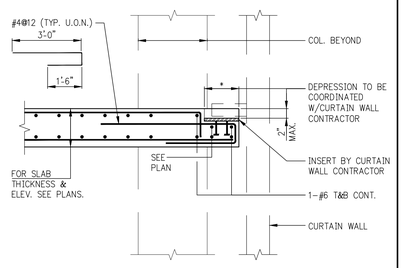

TYPICAL SPANDREL @ CURTAIN WALL SUPPORT

(AT EDGE OF SLAB W/O BEAM)

NOTE:
THIS CONNECTION IS APPLICABLE BETWEEN COLUMNS
CONNECTION MUST BE CHECK BY E.O.R AT ALL COLUMN LOCATION.

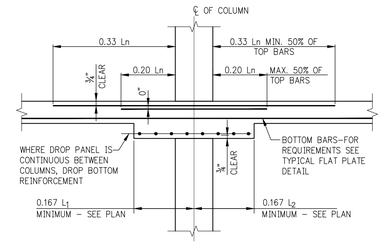

FLAT SLAB WITH DROP PANELS AT COLUMN STRIP

(MID–STRIP BARS SAME AS TYPICAL FLAT PLATE DETAIL)

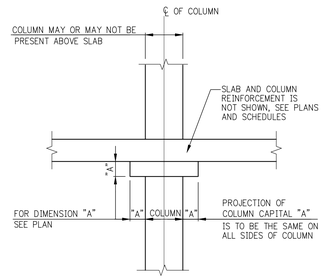

COLUMN WITH CAPITAL

KEY PLAN:

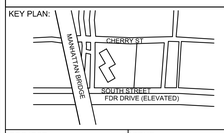

PROJECT NORTH

TRUE NORTH

DEVELOPER:
EXTELL DEVELOPMENT COMPANY
805 Third Ave, 7th Floor
New York, NY 10022
TEL: 212-712-6000 FAX: 212-712-6100

ARCHITECT OF RECORD:
AAI ARCHITECTS, P.C.
14 Wall Street, 2nd Floor
New York, NY 10005
TEL: 212-964-4040 FAX: 212-964-4090

INTERIOR DESIGNER:
MEYER DAVIS
180 Varick St, suite 404
New York, NY 10014
TEL: 212-627-5574

LANDSCAPE DESIGNER:
WEST 8 URBAN DESIGN & LANDSCAPE ARCHITECTURE P.C.
333 Hudson Street, Suite 905
New York, NY 10013
TEL: 212-285-0088 FAX: 212-285-0228

STRUCTURAL ENGINEERS:
WSP
228 East 45th Street
New York, NY 10017
TEL: 212-687-9888 FAX: 646-487-5501

MEP ENGINEERS:
ICOR ASSOCIATES, LLC
485 C Route 1 South, Suite 200
Iselin, NJ 08830
TEL: 908-272-3300 FAX: 908-272-4440

GEOTECHNICAL ENGINEERS:
LANGAN ENGINEERING & ENVIRONMENTAL SERVICES
21 Penn Plaza - 360 West 31st Street, 8th Floor
New York, NY 10001
TEL: 212.479.5400 FAX: 212.479.5444

No.	DESCRIPTION:	DATE:
1	50% DD	08–01–14
2	ISSUED FOR DOT	08–07–14
3	DESIGN DEVELOPMENT	10–07–14
4	CONCRETE BID PACKAGE	03–06–15
5	ISSUED FOR FILING	03–26–15

Discrepancies must be reported immediately to the Architect before proceeding. Only figured dimensions are to be used. Contractors must check all dimensions on site. This drawing is protected by copyright.

ALL DIMENSIONS ARE SHOWN IN IMPERIAL.

CONSULTANT:
AAI ARCHITECTS, P.C.

PROJECT:
250 SOUTH STREET
NEW YORK, NY

DRAWING TITLE:
TYPICAL CONCRETE SUPERSTRUCTURE DETAILS 2

SEAL & SIGNATURE:
STATE OF NEW YORK · EDWARD RAMBERT · No. 086507 · LICENSED PROFESSIONAL ENGINEER

DATE:	07/25/14
PROJECT No:	1302510
DRAWN: CADD	REV:
CHK: CL	
SCALE: N.T.S.	

DWG No:
S-965.00

DOB PAGE No: of

DOB EMPLOYEE STAMP:
Damian Titus
Buildings
APPROVED
Under Directive 2 of 1975
Date: 05/21/2015:
NYC Development Hub

DOB B-SCAN:

FILE NAME:
PLOT DATE:

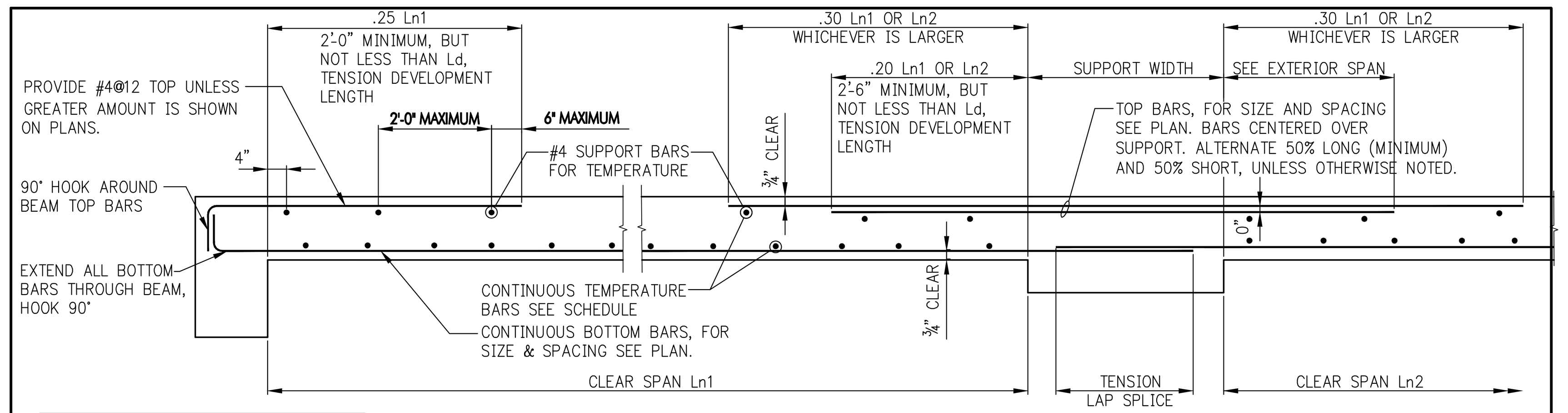

MINIMUM TEMPERATURE REINFORCEMENT (BOTTOM) ONE WAY SLABS	
SLAB THICKNESS	MIN. TEMPERATURE REINFORCEMENT
UP TO 6"	#4@18
6"+ TO 7"	#4@16
7"+ TO 8"	#4@14
8"+ TO 9"	#4@12
9"+ TO 10"	#4@10 OR #5@15
10"+ TO 12"	#4@9 OR #5@14
12"+ TO 14"	#4@8 OR #5@12
14"+ TO 16"	#5@10
OVER 16"	BY DESIGNER

AT SUPPORT WHERE SLAB IS NON-CONTINUOUS

AT SUPPORT WHERE SLAB IS CONTINUOUS

ONE WAY CONCRETE SLAB

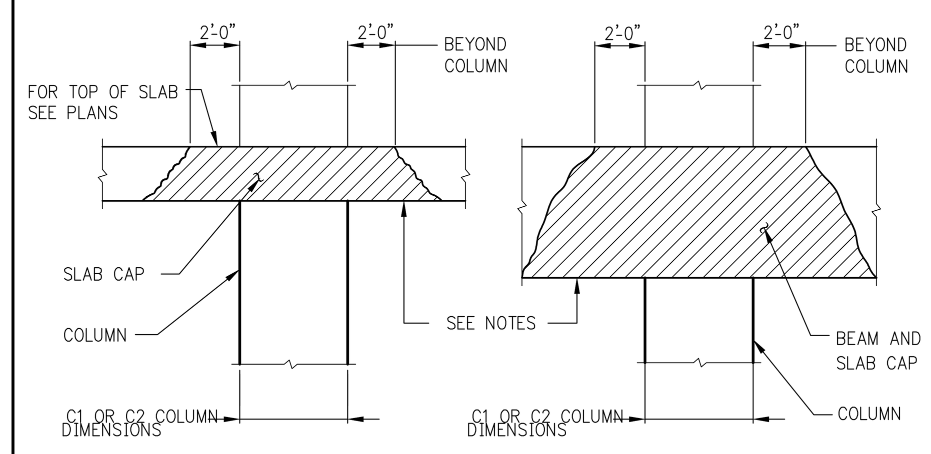

BEAM AND SLAB CONCRETE PLACEMENT AT HIGH STRENGTH CONCRETE COLUMN OR WALL

NOTES:

1. IN CONFORMANCE WITH 10.13 OF ACI 318-89 (10.15 in 2002 CODE), USE THIS DETAIL WHEN THE SPECIFIED CONCRETE STRENGTH IN COLUMN/WALL IS GREATER THAN 1.4 TIMES THAT SPECIFIED FOR THE FLOOR SYSTEM.
2. CAP SHALL BE NORMAL-WEIGHT STONE CONCRETE, EQUAL IN STRENGTH TO THAT SPECIFIED FOR THE COLUMN/WALL. CAP SHALL EXTEND BEYOND COLUMN/WALL IN ALL DIRECTIONS AS SHOWN ABOVE.
3. CAP CONCRETE SHALL NOT BE PLACED OVER THE COLUMN/WALL UNTIL COLUMN/WALL CONCRETE IS NO LONGER PLASTIC, BUT IN NO CASE LESS THAN TWO HOURS AFTER COLUMN/WALL CONCRETE PLACEMENT HAS BEEN COMPLETED.
4. THE BALANCE OF CONCRETE IN SLAB AND BEAMS SHALL BE PLACED WHILE CAP CONCRETE IS STILL IN A WORKABLE PLASTIC CONDITION, BEFORE INITIAL SET. RETEMPERING OF CONCRETE WILL NOT BE PERMITTED.
5. IN LIEU OF PLACING TWO DIFFERENT STRENGTHS OF CONCRETE WITHIN THE SAME FLOOR SYSTEM, THE CONTRACTOR MAY ELECT (AT NO ADDITIONAL COST TO THE OWNER) TO PLACE ONE STRENGTH THROUGHOUT THE ENTIRE FLOOR. THE MINIMUM FLOOR CONCRETE STRENGTH REQUIRED BY ACI CODE WOULD BE 0.72 TIMES THE SPECIFIED STRENGTH OF CONCRETE IN THE COLUMNS/WALLS, UP TO 10,000 PSI COLUMN/WALL CONCRETE.
6. WHEN COLUMN/WALL CONCRETE STRENGTH EXCEEDS 10,000 PSI, THE CAP DETAILS SHOWN ABOVE MUST BE FOLLOWED, USING CAPS OF SAME CONCRETE STRENGTH AS IN COLUMNS/WALLS, AND THE STRENGTH SPECIFIED ON THE DRAWINGS FOR THE BALANCE OF THE FLOOR SYSTEM.

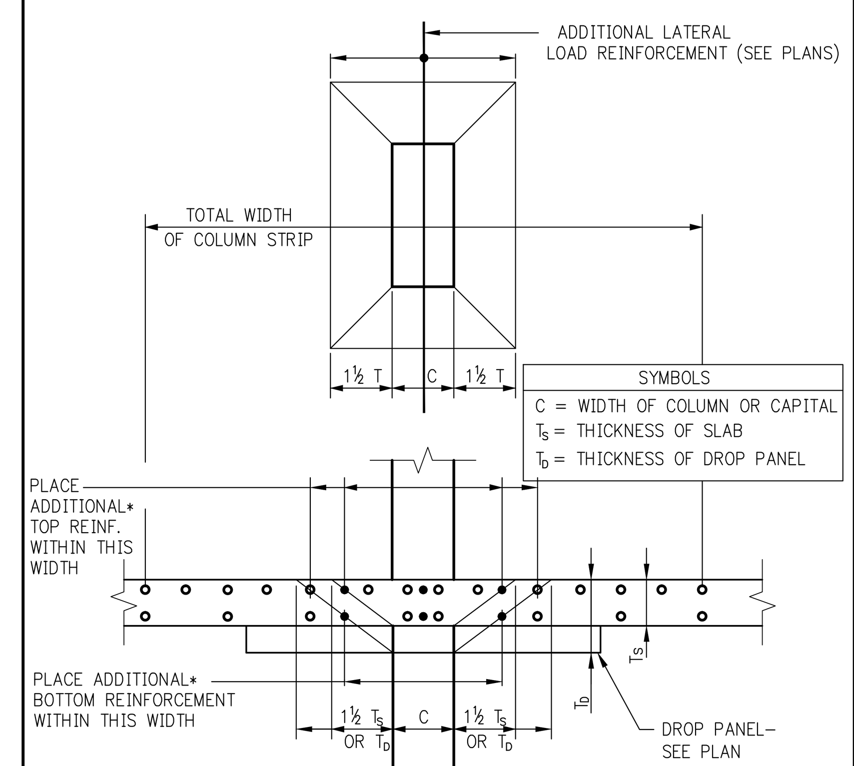

ADDITIONAL COLUMN STRIP REINFORCEMENT DUE TO LATERAL LOAD (WIND OR SEISMIC)

NOTE:
ADDITIONAL TOP OR BOTTOM BARS ARE NOTED ON PLAN WITH AN ASTERISK *.

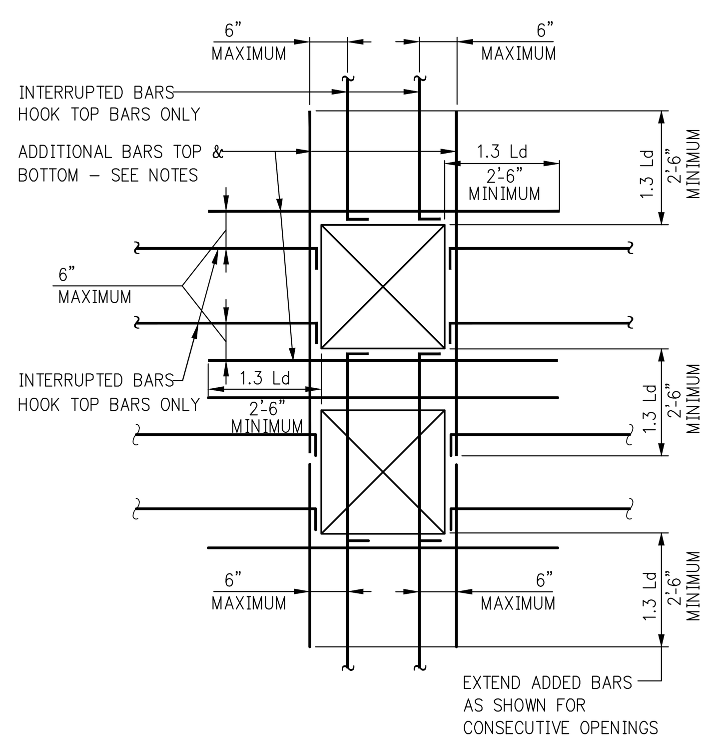

ADDED REINFORCEMENT AT OPENINGS IN FLOOR SLAB

NOTES:

1. ADDITIONAL BARS EQUAL IN AREA TO AREA OF REINFORCEMENT INTERRUPTED BY OPENING(S) SHALL BE PLACED ALONGSIDE OPENING(S), ONE HALF ON EACH SIDE (#5 MINIMUM DIAMETER), TOP AND BOTTOM.
2. ADD 1-#5 TOP AND BOTTOM EACH SIDE OF OPENING, ADDITIONAL TO REPLACEMENT BARS.
3. WHERE OPENINGS ARE NEAR OR AGAINST EXTERIOR BEAMS OR COLUMNS AND ADDED REINFORCEMENT CAN NOT BE EXTENDED AS SHOWN, HOOK EXTERIOR END.
4. AT OPENINGS SMALLER THAN THE SLAB THICKNESS (10" MAXIMUM), NO ADDITIONAL REINFORCEMENT IS REQUIRED, PLACE NORMAL REINFORCEMENT ALONGSIDE OPENING.
5. Ld = TENSION DEVELOPMMENT LENGTH, SEE TABLES.

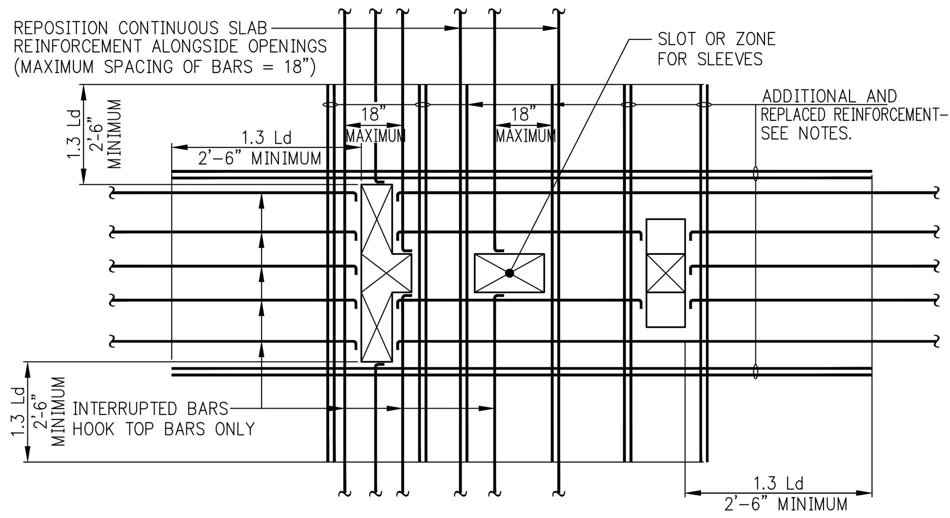

SLAB OPENINGS AT BATHROOM

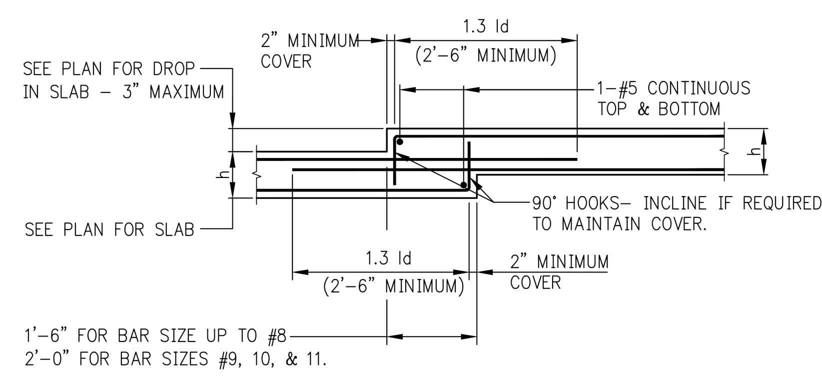

DROP IN TOP AND BOTTOM OF SLAB
(MAXIMUM DROP = 3")

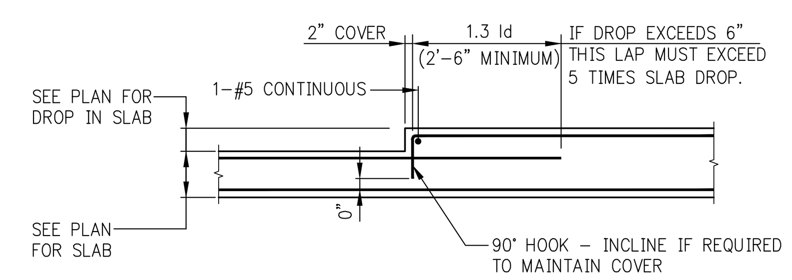

DROP IN TOP OF SLAB

NOTE:
BARS IN OTHER DIRECTION ARE NOT SHOWN - SEE PLANS.

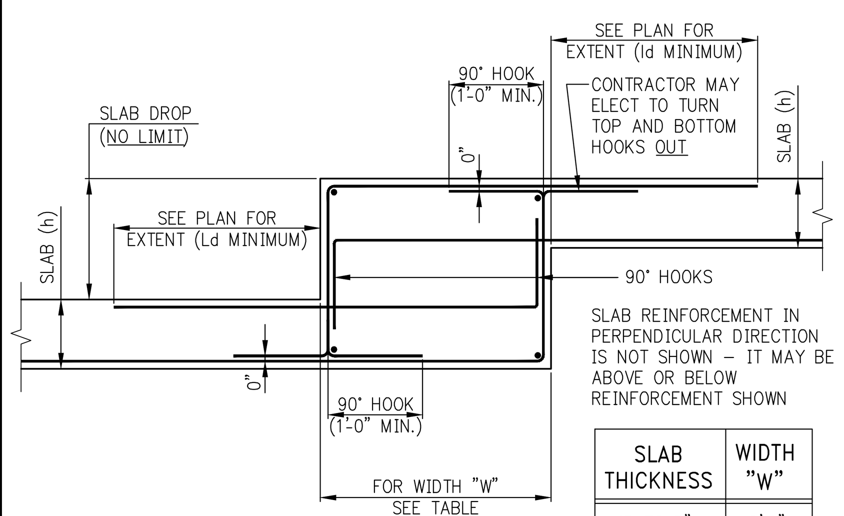

SLAB THICKNESS	WIDTH "W"
UP TO 8"	2'-0"
8"+ TO 10"	2'-6"
OVER 10"	3'-0"

DROP IN TOP AND BOTTOM OF SLAB
(DROP GREATER THAN 3")

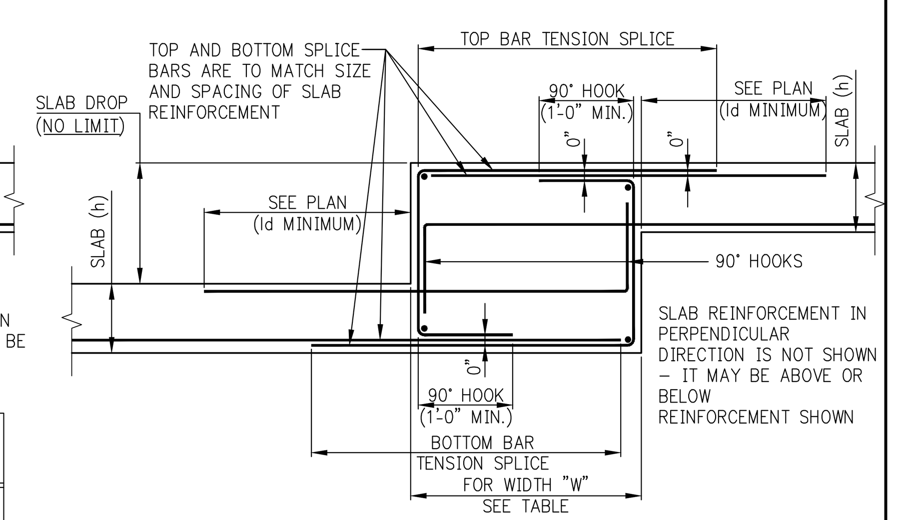

ALTERNATIVE DROP IN TOP AND BOTTOM OF SLAB USING SPLICE BARS
(DROP GREATER THAN 3")

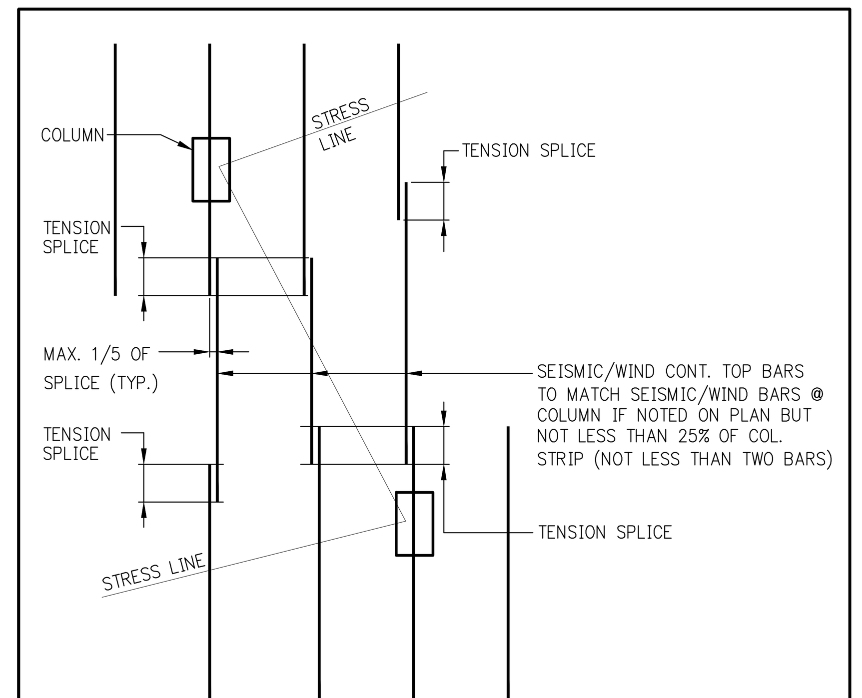

DETAIL OF SEISMIC/WIND TOP BARS

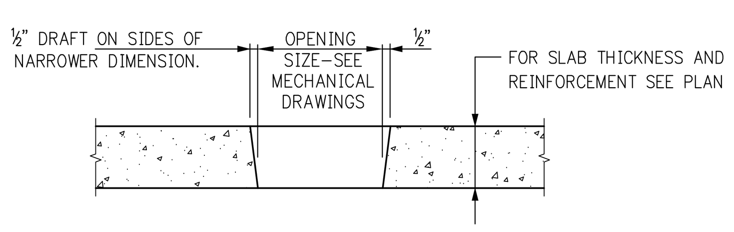

PLUMBING OPENING (SLOT) IN SLAB

NOTES:

1. FOR LOCATIONS AND DIMENSIONS OF PLUMBING OPENINGS SEE MECHANICAL AND/OR ARCHITECTORAL DRAWINGS.
2. FILL ALL OPENINGS WITH CONCRETE AFTER PIPING HAS BEEN INSTALLED.
3. FOR SLAB REINFORCEMENT DETAILS ALONGSIDE OPENINGS SEE DETAIL OF "ADDED REINFORCEMENT AT OPENINGS IN FLOOR SLAB".
4. MINIMUM REQUIREMENTS ARE SHOWN IN THESE DETAILS. SEE PLAN FOR ADDITIONAL REQUIREMENTS.

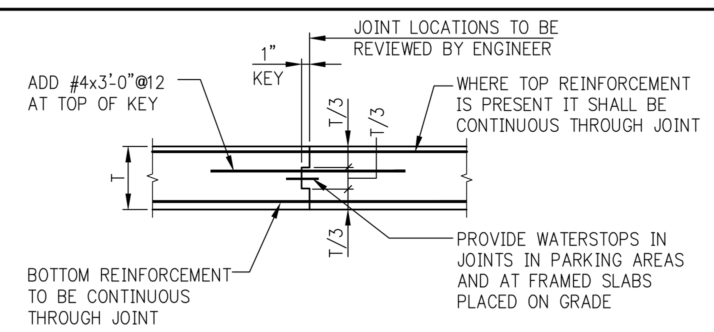

SLAB CONSTRUCTION JOINT

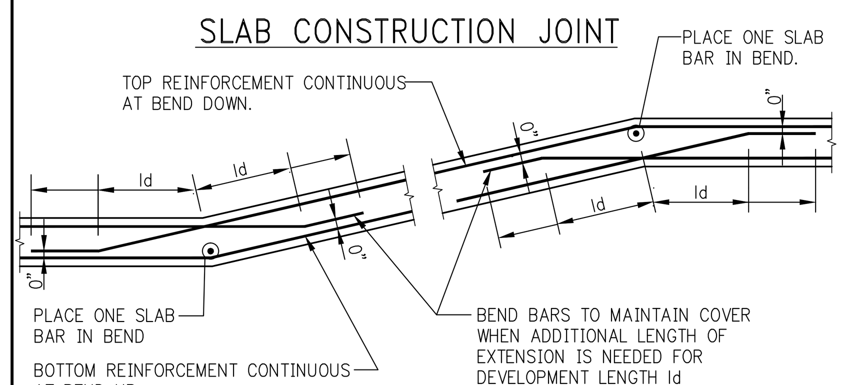

SLAB SLOPES UP — BEND IN SLAB — SLAB SLOPES DOWN

NOTE:
BARS IN OTHER DIRECTION ARE NOT SHOWN- SEE PLANS.

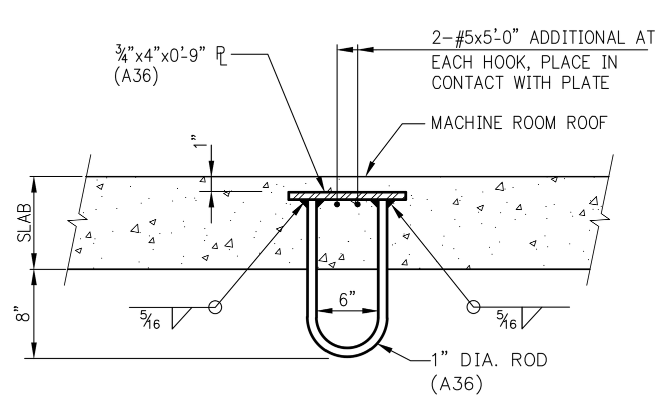

LIFTING HOOK AT ELEVATOR

MAXIMUM SERVICE LOAD LIFTING CAPACITY = 2,000 POUNDS.
FOR HEAVIER LOADS A SOLID PLATE WITH HOLE MUST BE PROVIDED.

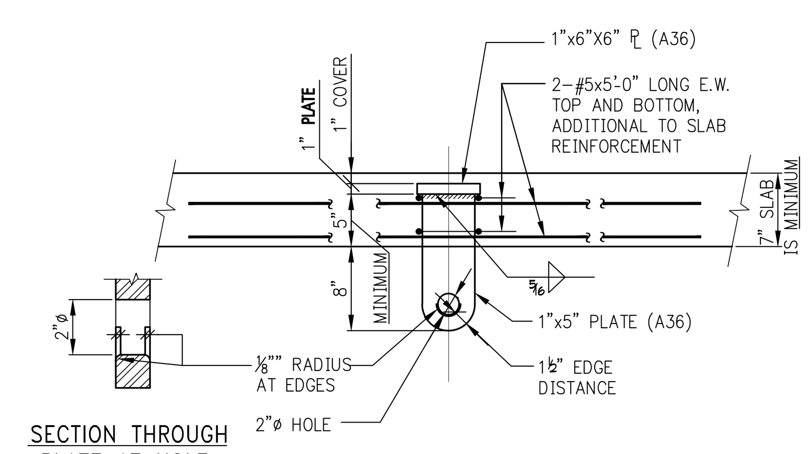

HEAVY LIFTING "PADEYE" PLATE AT ELEVATOR

MAXIMUM SERVICE LOAD LIFTING CAPACITY = 10,000 POUNDS.

NOTES:

1. SLAB REINFORCEMENT IS NOT SHOWN.
2. PLACE ADDITIONAL #5 BOTTOM BARS IN THE SAME PLANE(S) AS SLAB BOTTOM REINFORCEMENT.

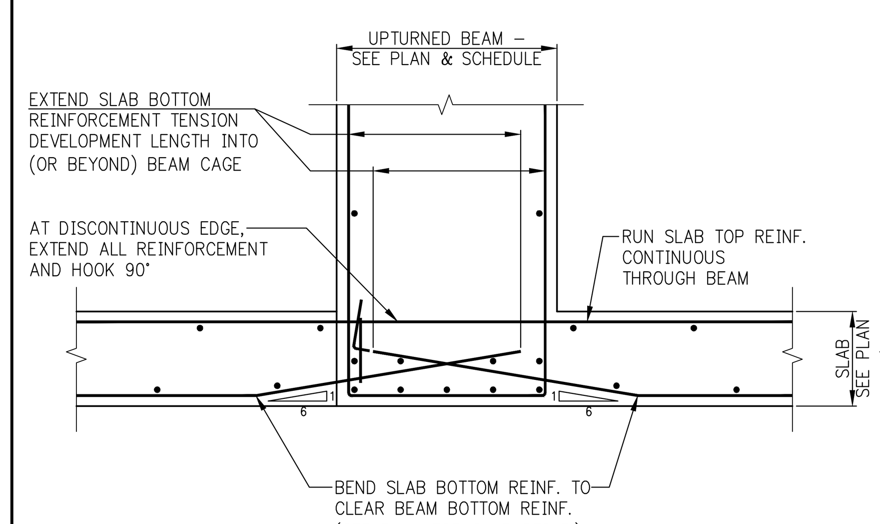

SLAB BOTTOM REINFORCEMENT AT A FULLY UPTURNED BEAM

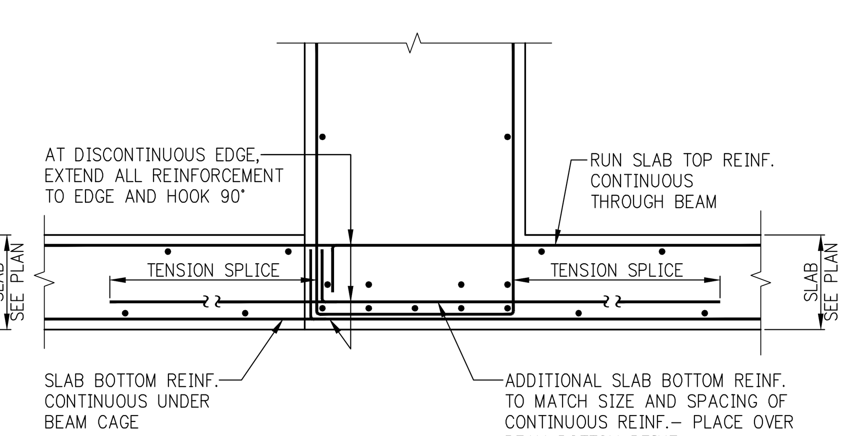

ALTERNATIVE SLAB BOTTOM REINFORCEMENT AT A FULLY UPTURNED BEAM

KEY PLAN:

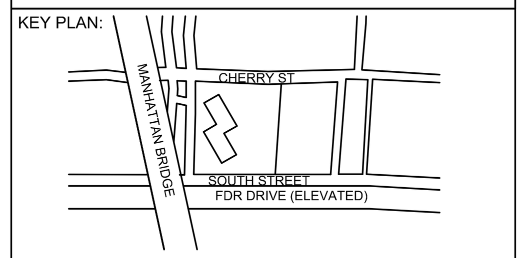

PROJECT NORTH — TRUE NORTH

DEVELOPER:
EXTELL DEVELOPMENT COMPANY
805 Third Ave, 7th Floor
New York, NY 10022
TEL:212-712-6000 FAX: 212-712-6100

ARCHITECT OF RECORD:
AAI ARCHITECTS, P.C.
14 Wall Street, 2nd Floor
New York, NY 10005
TEL: 212-964-4040 FAX: 212-964-4090

INTERIOR DESIGNER:
MEYER DAVIS
180 Varick St, suite 404
New York, NY 10014
TEL: 212-627-5574

LANDSCAPE DESIGNER:
WEST 8 URBAN DESIGN & LANDSCAPE ARCHITECTURE P.C.
333 Hudson Street, Suite 905
New York, NY 10013
TEL: 212-285-0088 FAX: 212-285-0228

STRUCTURAL ENGINEERS:
WSP
228 East 45th Street
New York, NY 10017
TEL: 212-687-9888 FAX: 646-487-5501

MEP ENGINEERS:
ICOR ASSOCIATES, LLC
485 C Route 1 South, Suite 200
Iselin, NJ 08830
TEL: 908-272-3300 FAX: 908-272-4440

GEOTECHNICAL ENGINEERS:
LANGAN ENGINEERING & ENVIRONMENTAL SERVICES
21 Penn Plaza - 360 West 31st Street, 8th Floor
New York, NY 10001
TEL: 212.479.5400 FAX: 212.479.5444

No.	DESCRIPTION:	DATE:
1	50% DD	08-01-14
2	DESIGN DEVELOPMENT	10-07-14
3	CONCRETE BID PACKAGE	03-06-15
4	ISSUED FOR FILING	03-26-15

Discrepancies must be reported immediately to the Architect before proceeding. Only figured dimensions are to be used. Contractors must check all dimensions on site. This drawing is protected by copyright.

ALL DIMENSIONS ARE SHOWN IN IMPERIAL.

CONSULTANT:
AAI ARCHITECTS, P.C.

PROJECT:
250 SOUTH STREET
NEW YORK, NY

DRAWING TITLE:
TYPICAL CONCRETE SUPERSTRUCTURE DETAILS 3

SEAL & SIGNATURE:

DATE:	07/25/14
PROJECT No:	1302510
DRAWN: CADD	REV:
CHK:	CL
SCALE:	N.T.S.
DWG No:	S-966.00
DOB PAGE No:	of

DOB EMPLOYEE STAMP: — DOB B-SCAN:

Damian Titus
NYC Buildings
APPROVED
Under Directive 2 of 1975
Date: 05/21/2015
NYC Development Hub

DEPT OF BLDGS 121185528 Job Number
E533744175 Scan Code
30" x 42" Arch E1 - SHEET SIZE
FILE NAME:
PLOT DATE:

DEPT OF BLDGS121105039 Job Number
IE3294976845 Scan Code
30" x 42" Arch E1 - SHEET SIZE

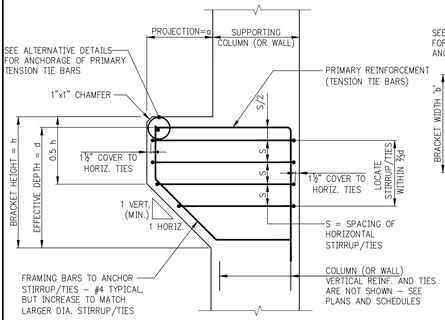

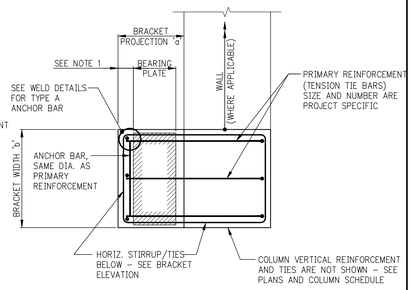

BRACKET

NOTES:
1. BEARING AREA SHALL NOT PROJECT BEYOND INTERIOR FACE OF ANCHOR BAR.
2. PROVIDE POSITIVE ANCHORAGE BETWEEN BEARING PLATE AND BRACKET, SUCH AS STUDS, REBAR WELDED TO PLATE, ETC.

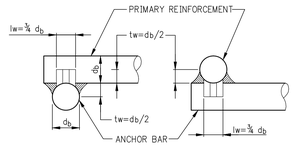

TYPE A: ANCHORAGE OF BRACKET PRIMARY REINFORCEMENT BY WELDED ANCHOR BAR (ACI 11.9.6a)

NOTE:
AT WELDED ANCHORAGE, BOTH PRIMARY REINFORCEMENT AND ANCHOR BAR SHALL CONFORM TO ASTM A706, GRADE 60. ELECTRODES SHALL BE E90XX, LOW HYDROGEN. CONFORM TO AWS D1.4.

NOTES:
1. BEARING AREA SHALL NOT PROJECT BEYOND INTERIOR FACE OF HORIZONTAL HOOPS.
2. PROVIDE POSITIVE ANCHORAGE BETWEEN BEARING PLATE AND BRACKET, SUCH AS STUDS, REBAR WELDED TO PLATE, ETC.

TYPE B: ANCHORAGE OF BRACKET PRIMARY REINFORCEMENT BY USE OF HORIZONTAL HOOPS (ACI 11.9.6b)

NOTES:
1. BEARING AREA SHALL NOT PROJECT BEYOND INTERIOR FACE OF D6 TERMINATOR.
2. PROVIDE POSITIVE ANCHORAGE BETWEEN BEARING PLATE AND BRACKET, SUCH AS STUDS, REBAR WELDED TO PLATE, ETC.

TYPE C: ANCHORAGE OF BRACKET PRIMARY REINFORCEMENT BY LENTON D6 TERMINATORS (OR EQUAL) (ACI 11.9.6c)

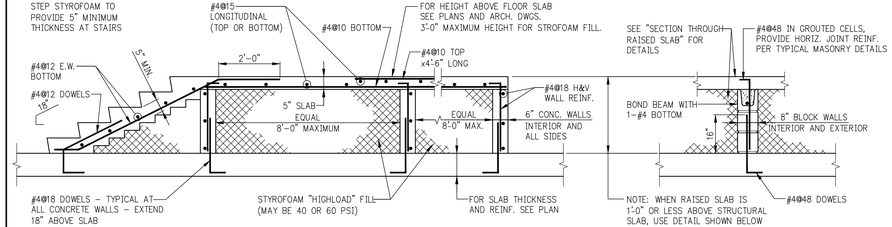

SECTION THROUGH RAISED SLAB FORMED WITH STYROFOAM

NOTES:
1. FOR STAIR TREADS, RISERS, AND WIDTH SEE ARCH. DWGS.
2. WHEN REQUIRED HEIGHT OF RAISED SLAB EXCEEDS 3'-0" USE STEEL DECK FORMS ALTERNATIVE. (STEEL DECK FORMED SLABS HAVE NO HEIGHT RESTICTIONS, MINIMUM OR MAXIMUM)

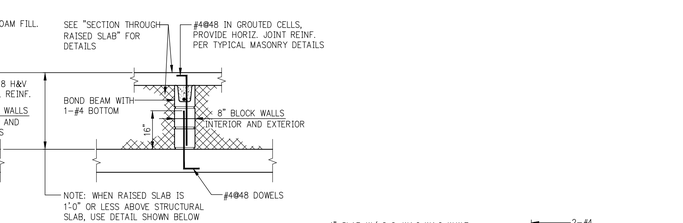

RAISED SLAB – ALTERNATIVE SUPPORTING WALL

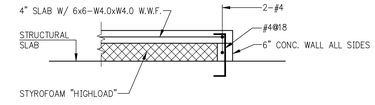

RAISED SLAB – 1'-0" OR LESS IN HEIGHT ABOVE STRUCTURAL SLAB

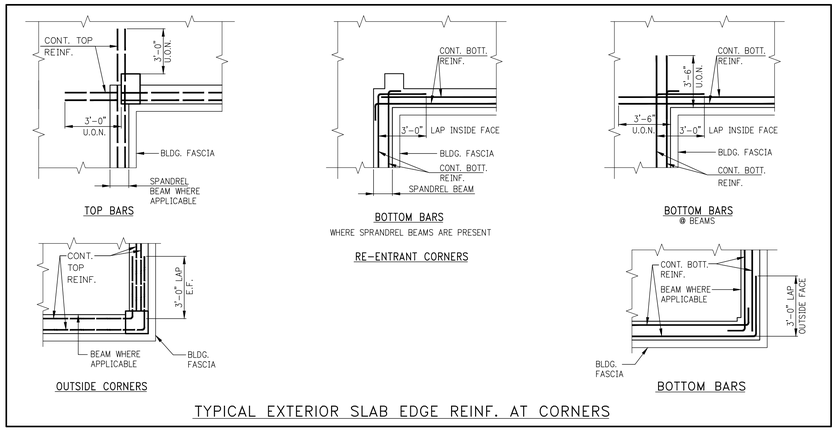

TYPICAL EXTERIOR SLAB EDGE REINF. AT CORNERS

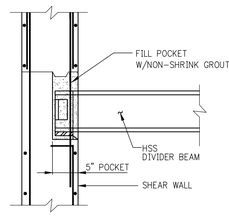

DETAIL OF ELEVATOR DIVIDER BEAM CONNECTION AT SHEAR WALLS

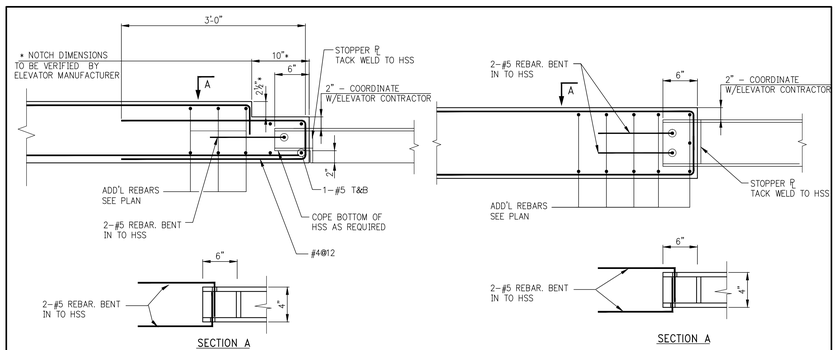

DETAIL @ ELEVATOR

DETAIL WITHOUT ELEVATOR SILL

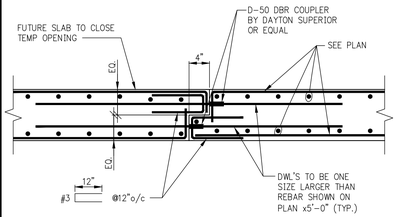

TYPICAL DETAIL @ KNOCK OUT PANEL

TYPICAL CONCRETE CURB DETAILS

NOTE: FOR LOCATION SEE ARCH. DWGS

TYPICAL CONCRETE CURB DETAIL (WITH CURTAIN WALL INSERTS)

NOTE: FOR LOCATION SEE ARCH. DWGS

RAMP ON CONCRETE SLAB

TYPICAL CONCRETE PAD DETAIL

NOTE:
FOR PAD EXTENT, DEPTH AND LOCATION SEE ARCH. & MECH. DWG'S.

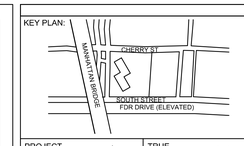

PROJECT NORTH | TRUE NORTH

DEVELOPER:
EXTELL DEVELOPMENT COMPANY
805 Third Ave, 7th Floor
New York, NY 10022
TEL: 212-712-6000 FAX: 212-712-6100

ARCHITECT OF RECORD:
AAI ARCHITECTS, P.C.
14 Wall Street, 2nd Floor
New York, NY 10005
TEL: 212-964-4040 FAX: 212-964-4090

INTERIOR DESIGNER:
MEYER DAVIS
180 Varick St, suite 404
New York, NY 10014
TEL: 212-627-5574

LANDSCAPE DESIGNER:
WEST 8 URBAN DESIGN & LANDSCAPE ARCHITECTURE P.C.
333 Hudson Street, Suite 905
New York, NY 10013
TEL: 212-285-0088 FAX: 212-285-0228

STRUCTURAL ENGINEERS:
WSP
228 East 45th Street
New York, NY 10017
TEL: 212-687-9888 FAX: 646-487-5501

MEP ENGINEERS:
ICOR ASSOCIATES, LLC
485 C Route 1 South, Suite 200
Iselin, NJ 08830
TEL: 908-272-3300 FAX: 908-272-4440

GEOTECHNICAL ENGINEERS:
LANGAN ENGINEERING & ENVIRONMENTAL SERVICES
21 Penn Plaza - 360 West 31st Street, 8th Floor
New York, NY 10001
TEL: 212.479.5400 FAX: 212.479.5444

No.	DESCRIPTION:	DATE:
1	50% DD	08-01-14
2	DESIGN DEVELOPMENT	10-07-14
3	CONCRETE BID PACKAGE	03-06-15
4	ISSUED FOR FILING	03-26-15

Discrepancies must be reported immediately to the Architect before proceeding. Only figured dimensions are to be used. Contractors must check all dimensions on site. This drawing is protected by copyright.

ALL DIMENSIONS ARE SHOWN IN IMPERIAL.

CONSULTANT:
AAI ARCHITECTS, P.C.

PROJECT:
250 SOUTH STREET
NEW YORK, NY

DRAWING TITLE:
TYPICAL CONCRETE SUPERSTRUCTURE DETAILS 4

SEAL & SIGNATURE:
STATE OF NEW YORK · ANMAD RAHIMOV · No. 065552 · LICENSED PROFESSIONAL ENGINEER

DATE: 07/25/14
PROJECT No: 1302510
DRAWN: CADD | REV:
CHK: CL
SCALE: N.T.S.
DWG No: **S-967.00**
DOB PAGE No: of

DOB EMPLOYEE STAMP:
Damian Titus
Buildings
APPROVED
Under Directive 2 of 1975
Date: 05/21/2015
NYC Development Hub

DOB B-SCAN:

FILE NAME:
PLOT DATE:

TABLE #1:
TENSION LAP SPLICE LENGTHS (CLASS B MINIMUM)

TABLE 1.A: ¾" COVER TO OUTER LAYER BARS
OUTER LAYER LAP LENGTHS (IN INCHES)

BAR \ f'c	3,000	4,000	5,000	6,000	7,000	8,000	9,000	10,000+
#3	16	16	16	16	16	16	16	16
#4	21	20	20	20	20	20	20	20
#5	31	27	24	24	24	24	24	24
#6	43	37	33	30	29	29	29	29
#7	69	60	53	49	45	42	40	38
#8	85	74	66	60	56	52	49	47
#9	103	89	80	73	67	63	59	56
#10	121	105	94	86	79	74	70	66
#11	140	122	109	99	92	86	81	77

TABLE 1.C: 1½" COVER TO OUTER LAYER BARS
OUTER LAYER LAP LENGTHS (IN INCHES)

NOTE: USE TABLE 1.A IF BAR SPACING IS LESS THAN 4" O/C UP TO #8, 5" O/C FOR #9, #10, #11

BAR \ f'c	3,000	4,000	5,000	6,000	7,000	8,000	9,000	10,000+
#3	16	16	16	16	16	16	16	16
#4	20	20	20	20	20	20	20	20
#5	24	24	24	24	24	24	24	24
#6	29	29	29	29	29	29	29	29
#7	42	37	34	34	34	34	34	34
#8	53	46	41	39	39	39	39	39
#9	66	57	51	46	44	44	44	44
#10	79	68	61	56	51	49	49	49
#11	92	80	72	65	60	57	54	54

TABLE 1.B: ¾" COVER TO OUTER LAYER BARS
INNER LAYER LAP LENGTHS (IN INCHES)

NOTE: USE TABLE 1.A IF BAR SPACING IS LESS THAN 4" O/C UP TO #8, 5" O/C FOR #9, #10, #11

BAR \ f'c	3,000	4,000	5,000	6,000	7,000	8,000	9,000	10,000+
#3	16	16	16	16	16	16	16	16
#4	20	20	20	20	20	20	20	20
#5	24	24	24	24	24	24	24	24
#6	30	29	29	29	29	29	29	29
#7	48	42	38	34	34	34	34	34
#8	61	53	47	43	40	39	39	39
#9	75	65	58	53	49	46	44	44
#10	89	77	69	63	58	55	51	49
#11	104	90	81	74	68	64	60	57

TABLE 1.D: 1½" COVER TO OUTER LAYER BARS
INNER LAYER LAP LENGTHS (IN INCHES)

NOTE: USE TABLE 1.A IF BAR SPACING IS LESS THAN 5" O/C UP TO #8, 6" O/C FOR #9, #10, #11

BAR \ f'c	3,000	4,000	5,000	6,000	7,000	8,000	9,000	10,000+
#3	16	16	16	16	16	16	16	16
#4	20	20	20	20	20	20	20	20
#5	24	24	24	24	24	24	24	24
#6	29	29	29	29	29	29	29	29
#7	37	34	34	34	34	34	34	34
#8	43	39	39	39	39	39	39	39
#9	53	46	44	44	44	44	44	44
#10	64	55	49	49	49	49	49	49
#11	75	65	58	54	54	54	54	54

NOTES FOR TENSION LAP SPLICES

1. REINFORCEMENT IS UNCOATED, WITH Fy=60,000 PSI.
2. CONCRETE IS NORMAL WEIGHT (144–150#/C.F.).
3. "TOP"' REINFORCEMENT:
   a. WHERE HORIZONTAL REINFORCEMENT IS PLACED SUCH THAT MORE THAN 12 INCHES OF FRESH CONCRETE IS CAST BELOW THE SPLICE, TABULATED LENGTHS MUST BE MULTIPLIED BY 1.3.
   b. SUCH LOCATIONS INCLUDE, BUT ARE NOT LIMITED TO, BEAMS, SLABS, FOOTINGS, MATS, AND WALLS.
   c. WALL HORIZONTAL REINFORCEMENT INCLUDE BARS EACH FACE , ADDED BARS, CORNER BARS, "U" BARS, ETC.
   d. "FRESH" CONCRETE INCLUDES ALL CONCRETE CAST BELOW "TOP" REINFORCEMENT WITHIN PERIOD OF TWO HOURS.
4. TABULATED LENGTHS MUST BE MULTIPLIED BY THE FOLLOWING MODIFICATION FACTORS:
   a. LIGHTWEIGHT CONCRETE 1.3
   b. EPOXY–COATED BARS:
      1.) BARS WITH COVER < 3db, OR WITH CLEAR SPACING < 6db ...1.5*
      2.) ALL OTHER CONDITIONS 1.2

   * FOR EPOXY–COATED 'TOP' BARS THE MAXIMUM FOR COMBINED FACTORS = 1.7
5. WHERE TENSION DEVELOPMENT LENGTH (Ld) IS REQUIRED ON PLANS OR IN DETAILS, SEE TENSION DEVELOPMENT LENGTH TABLES.
6. CLASS A LAP SPLICE LENGTHS (AS DEFINED AS BY ACI) ARE EQUAL TO TENSION DEVELOPMENT LENGTHS. SEE TABLES FOR TENSION DEVELOPMENT LENGTHS (Ld). APPLY APPROPRIATE MODIFICATION FACTORS TO CLASS A SPLICE LENGTHS.

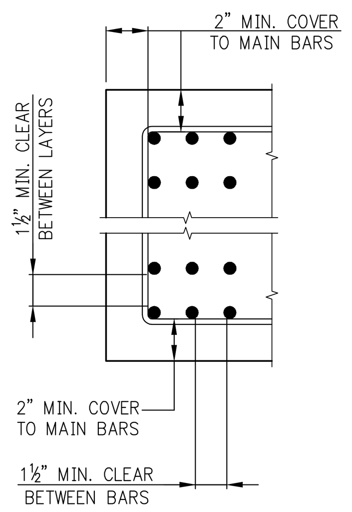

MULTIPLE LAYERS

PROVIDE MINIMUM COVER AND CLEARANCES SHOWN, USE TABLE 1.A FOR LAP SPLICE LENGTHS.

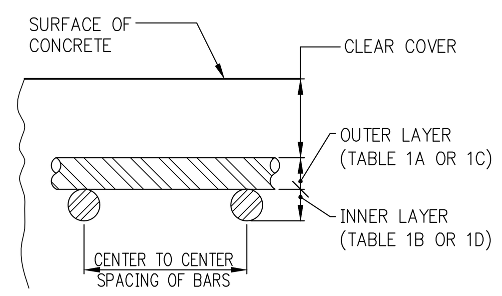

TABLE #2:
TENSION DEVELOPMENT LENGTHS (Ld) (IN INCHES)

TABLE 2.A: ¾" COVER TO OUTER LAYER BARS
OUTER LAYER DEVELOPMENT LENGTHS

BAR \ f'c	3,000	4,000	5,000	6,000	7,000	8,000	9,000	10,000+
#3	12	12	12	12	12	12	12	12
#4	16	14	13	12	12	12	12	12
#5	24	21	19	17	16	15	14	13
#6	33	28	25	23	22	20	19	18
#7	53	46	41	37	35	32	31	29
#8	66	57	51	46	43	40	38	36
#9	79	69	61	56	52	49	46	43
#10	93	81	72	66	61	57	54	51
#11	108	94	84	76	71	66	62	59

TABLE 2.C: 1½" COVER TO OUTER LAYER BARS
OUTER LAYER DEVELOPMENT LENGTHS

NOTE: USE TABLE 2.A IF BAR SPACING IS LESS THAN 4" O.C. UP TO #8, 5" O.C. FOR #9, #10, #11

BAR \ f'c	3,000	4,000	5,000	6,000	7,000	8,000	9,000	10,000+
#3	12	12	12	12	12	12	12	12
#4	13	12	12	12	12	12	12	12
#5	16	14	13	13	13	13	13	13
#6	20	17	15	15	15	15	15	15
#7	32	28	25	23	21	20	19	18
#8	41	36	32	29	27	25	24	23
#9	50	44	39	36	33	31	29	28
#10	60	52	47	43	40	37	35	33
#11	71	61	55	50	46	43	41	39

TABLE 2.B: ¾" COVER TO OUTER LAYER BARS
INNER LAYER DEVELOPMENT LENGTHS

NOTE: USE TABLE 2.A IF BAR SPACING IS LESS THAN 4" O.C. UP TO #8, 5" O.C. FOR #9, #10, #11

BAR \ f'c	3,000	4,000	5,000	6,000	7,000	8,000	9,000	10,000+
#3	12	12	12	12	12	12	12	12
#4	13	12	12	12	12	12	12	12
#5	16	14	13	13	13	13	13	13
#6	23	20	18	16	15	15	15	15
#7	37	32	29	26	24	23	22	20
#8	47	41	36	33	31	29	27	26
#9	57	50	44	41	38	35	33	31
#10	68	59	53	48	45	42	40	38
#11	80	69	62	57	52	49	46	44

TABLE 2.D: 1½" COVER TO OUTER LAYER BARS
INNER LAYER DEVELOPMENT LENGTHS

NOTE: USE TABLE 2.A IF BAR SPACING IS LESS THAN 5" O.C. UP TO #8, 6" O.C. FOR #9, #10, #11

BAR \ f'c	3,000	4,000	5,000	6,000	7,000	8,000	9,000	10,000+
#3	12	12	12	12	12	12	12	12
#4	13	12	12	12	12	12	12	12
#5	16	14	13	13	13	13	13	13
#6	20	17	15	15	15	15	15	15
#7	29	25	22	20	19	18	18	18
#8	33	28	25	23	22	20	20	20
#9	41	35	31	29	27	25	23	23
#10	49	42	38	35	32	30	28	27
#11	58	50	45	41	38	35	33	32

NOTES FOR TENSION DEVELOPMENT LENGTHS (Ld)

1. REINFORCEMENT IS UNCOATED, WITH Fy=60,000 PSI.
2. CONCRETE IS NORMAL WEIGHT (144–150#/C.F.).
3. "TOP"' REINFORCEMENT:
   a. WHERE HORIZONTAL REINFORCEMENT IS PLACED SUCH THAT MORE THAN 12 INCHES OF FRESH CONCRETE IS CAST BELOW THE DEVELOPMENT LENGTH, TABULATED LENGTHS MUST BE MULTIPLIED BY 1.3.
   b. SUCH LOCATIONS INCLUDE, BUT ARE NOT LIMITED TO, BEAMS, SLABS, FOOTINGS, MATS, AND WALLS.
   c. WALL HORIZONTAL REINFORCEMENT INCLUDE BARS EACH FACE , ADDED BARS, CORNER BARS, "U" BARS, ETC.
   d. "FRESH" CONCRETE INCLUDES ALL CONCRETE CAST BELOW "TOP" REINFORCEMENT WITHIN PERIOD OF TWO HOURS.
4. TABULATED LENGTHS MUST BE MULTIPLIED BY THE FOLLOWING MODIFICATION FACTORS:
   a. LIGHTWEIGHT CONCRETE 1.3
   b. EPOXY–COATED BARS:
      1.) BARS WITH COVER < 3db, OR WITH CLEAR SPACING < 6db ...1.5*
      2.) ALL OTHER CONDITIONS 1.2

   * FOR EPOXY–COATED 'TOP' BARS THE MAXIMUM FOR COMBINED FACTORS = 1.7
5. WHERE TENSION DEVELOPMENT LENGTH (Ld) IS REQUIRED ON PLANS OR IN DETAILS, SEE TENSION DEVELOPMENT LENGTH TABLES.
6. CLASS A LAP SPLICE LENGTHS (AS DEFINED BY ACI) ARE EQUAL TO TENSION DEVELOPMENT LENGTHS. SEE TABLES FOR TENSION DEVELOPMENT LENGTHS (Ld). APPLY APPROPRIATE MODIFICATION FACTORS TO CLASS A SPLICE LENGTHS.

TABLE #3
TENSION DEVELOPMENT LENGTHS FOR STANDARD END HOOKS (ldh)
(LENGTHS IN INCHES)

BAR SIZE	CONCRETE STRENGTH (PSI) 3,000	4,000	5,000	6,000	7,000	8,000	9,000	10,000+
#3	9	7	7	6	6	6	6	6
#4	11	10	9	8	7	7	7	6
#5	14	12	11	10	9	9	8	8
#6	17	15	13	12	11	10	10	9
#7	19	17	15	14	13	12	11	11
#8	22	19	17	16	15	14	13	12
#9	25	22	19	18	16	15	15	14
#10	28	24	22	20	19	17	16	16
#11	31	27	24	22	21	19	18	17
#14	37	32	29	27	25	23	22	21
#18	50	43	39	35	33	31	29	27

NOTES:

1. TABLE #3 CONFORMS TO ACI 318–2002 (AND 2005). TABULATED VALUES ARE BASED UPON ACI 12.5.2 , ASSUMING GRADE 60 REINFORCEMENT AND NORMALWEIGHT CONCRETE.
2. PER ACI 12.5.3 (a), FOR #11 AND SMALLER BARS, IF COVER TO BAR IS 2½ INCHES OR MORE, AND FOR 90 DEGREE HOOK WITH COVER ON BAR EXTENSION BEYOND HOOK NOT LESS THAN 2 INCHES, A MODIFICATION FACTOR OF 0.7 MAY BE APPLIED. MINIMUM ldh SHALL NOT BE LESS THAN 8db NOR 6 INCHES.

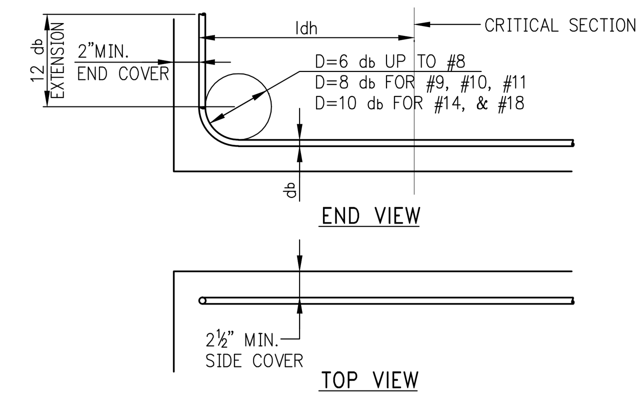

TABLE #4
COMPRESSION LAP SPLICES
(LENGTHS IN INCHES)

BAR SIZE	GRADE OF REINFORCEMENT 60 KSI (30 DIA.)	75 KSI (44 DIA.)	80 KSI (48 DIA.)
#3	12	17	18
#4	15	22	24
#5	19	28	30
#6	23	33	36
#7	27	39	42
#8	30	44	48
#9	34	50	54
#10	38	56	61
#11	43	62	68
#14 AND #18	1. LAP SPLICES ARE NOT PERMITTED. USE MECHANICAL CONNECTIONS OR WELDED SPLICES FOR #14 AND #18, PER ACI 318 (12.14.3). 2. LAP SPLICES OF #14 AND #18 BARS TO #11 AND SMALLER BARS ARE PERMITTED PER ACI 318 (12.16.2).		

3. FOR BARS OF DIFFERENT SIZE, USE LARGER OF: SPLICE LENGTH OF SMALLER BAR (TABLE #4) OR DEVELOPMENT LENGTH OF LARGER BAR (FROM TABLE #5) PER ACI 318 (12.16.2).

NOTE:

TABLE #4 APPLIES FOR NORMALWEIGHT CONCRETE WITH f'c = 3,000 PSI OR GREATER.

TABLE #5
DEVELOPMENT LENGTHS FOR BARS IN COMPRESSION
(LENGTHS IN INCHES)

BAR SIZE	fy = 60,000 PSI			fy = 75,000 PSI			fy = 80,000 PSI		
	CONC. f'c (IN PSI)			CONC. f'c (IN PSI)			CONC. f'c (IN PSI)		
	3,000	4,000	5,000 OR MORE	3,000	4,000	5,000 OR MORE	3,000	4,000	5,000 OR MORE
#3	12	12	12	12	12	12	12	12	12
#4	12	12	12	14	12	12	15	13	12
#5	14	12	12	17	15	14	18	16	15
#6	17	15	14	21	18	17	22	19	18
#7	19	17	16	24	21	20	26	22	21
#8	22	19	18	28	24	23	29	25	24
#9	25	22	21	31	27	25	33	28	27
#10	28	24	23	34	30	28	36	31	30
#11	31	27	26	38	33	31	40	34	33
#14	37	32	31	48	42	39	51	44	42
#18	50	43	41	62	54	51	65	56	54

DEPT OF BLDGS 121185528 Job Number
ES816111247 Scan Code

KEY PLAN:

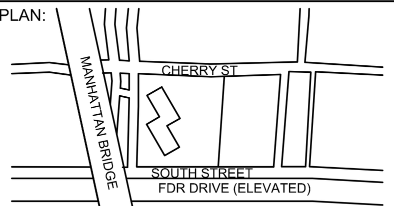

PROJECT NORTH

TRUE NORTH

DEVELOPER:
EXTELL DEVELOPMENT COMPANY
805 Third Ave, 7th Floor
New York, NY 10022
TEL: 212-712-6000 FAX: 212-712-6100

ARCHITECT OF RECORD:
AAI ARCHITECTS, P.C.
14 Wall Street, 2nd Floor
New York, NY 10005
TEL: 212-964-4040 FAX: 212-964-4090

INTERIOR DESIGNER:
MEYER DAVIS
180 Varick St, suite 404
New York, NY 10014
TEL: 212-627-5574

LANDSCAPE DESIGNER:
WEST 8 URBAN DESIGN & LANDSCAPE ARCHITECTURE P.C.
333 Hudson Street, Suite 905
New York, NY 10013
TEL: 212-285-0088 FAX: 212-285-0228

STRUCTURAL ENGINEERS:
WSP
228 East 45th Street
New York, NY 10017
TEL: 212-687-9888 FAX: 646-487-5501

MEP ENGINEERS:
ICOR ASSOCIATES, LLC
485 C Route 1 South, Suite 200
Iseline, NJ 08830
TEL: 908-272-3300 FAX: 908-272-4440

GEOTECHNICAL ENGINEERS:
LANGAN ENGINEERING & ENVIRONMENTAL SERVICES
21 Penn Plaza - 360 West 31st Street, 8th Floor
New York, NY 10001
TEL: 212.479.5400 FAX: 212.479.5444

No.	DESCRIPTION:	DATE:
1	50% DD	08-01-14
2	DESIGN DEVELOPMENT	10-07-14
3	CONCRETE BID PACKAGE	03-06-15
4	ISSUED FOR FILING	03-26-15

Discrepancies must be reported immediately to the Architect before proceeding. Only figured dimensions are to be used. Contractors must check all dimensions on site. This drawing is protected by copyright.

ALL DIMENSIONS ARE SHOWN IN IMPERIAL.

CONSULTANT:
AAI ARCHITECTS, P.C.

PROJECT:
250 SOUTH STREET
NEW YORK, NY

DRAWING TITLE:
TYPICAL CONCRETE SUPERSTRUCTURE DETAILS 5

SEAL & SIGNATURE:
STATE OF NEW YORK · AHMAD RAHIMIAN · No. 065537 · LICENSED PROFESSIONAL ENGINEER

DATE:	07/25/14
PROJECT No:	1302510
DRAWN:	CADD
CHK:	CL
SCALE:	N.T.S.
REV:	
DWG No:	**S-968.00**
DOB PAGE No:	of

DOB EMPLOYEE STAMP:
Damian Titus
Buildings
APPROVED
Under Directive 2 of 1975
Date: 05/21/2015:
NYC Development Hub

DOB B-SCAN:

DEPT OF BLDGS121185529 Job Number
E-3353501515 Scan Code
30" x 42" Arch E1 - SHEET SIZE

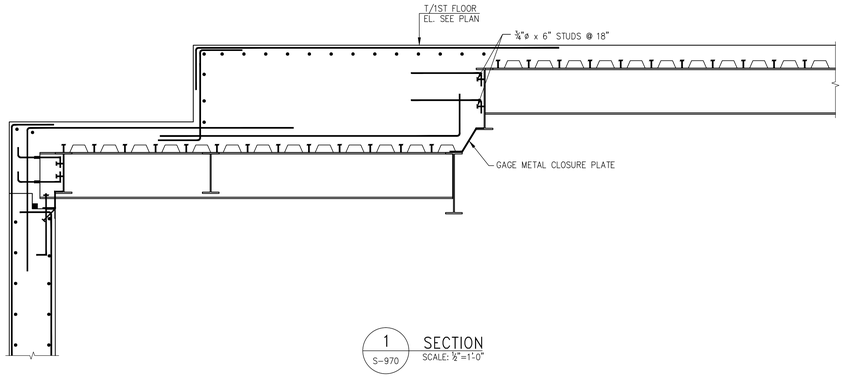

1 / S-970 SECTION
SCALE: ½"=1'-0"

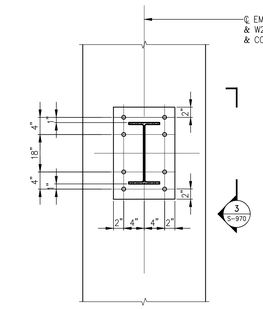

3 / S-970 W24 BRACKET CONNECTION DETAIL
SCALE: 1"=1'-0"

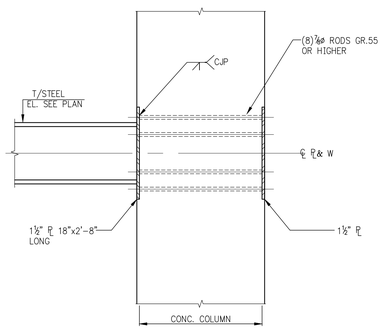

4 / S-970 SECTION
SCALE: 1"=1'-0"

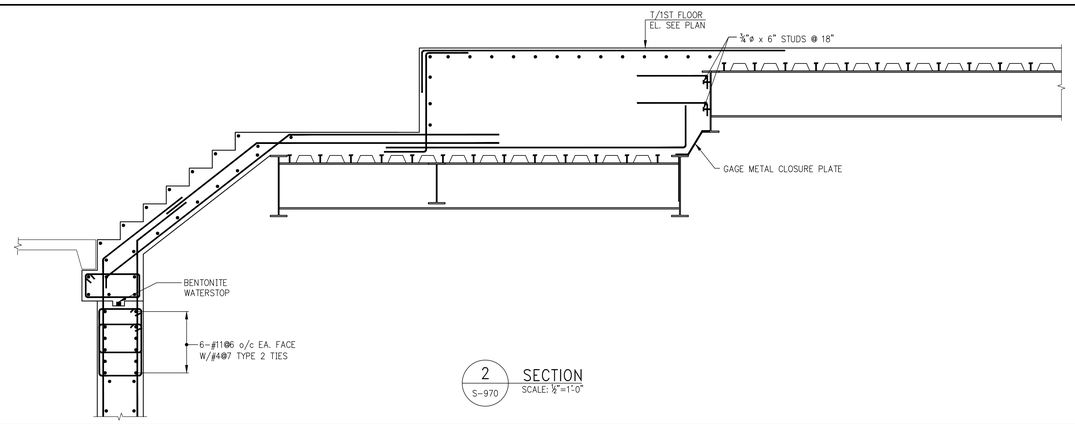

2 / S-970 SECTION
SCALE: ½"=1'-0"

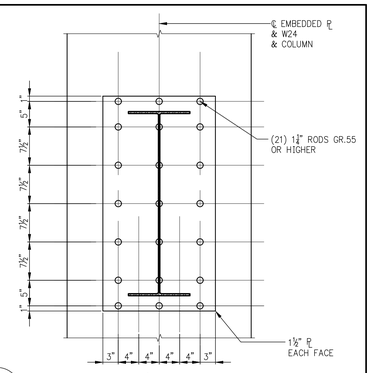

5 / S-970 W36 BRACKET/BEAM CONNECTION DETAIL
SCALE: 1"=1'-0"

KEY PLAN:

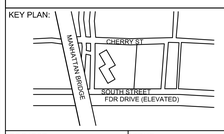

PROJECT NORTH | TRUE NORTH

DEVELOPER:
EXTELL DEVELOPMENT COMPANY
805 Third Ave, 7th Floor
New York, NY 10022
TEL: 212-712-6000 FAX: 212-712-6100

ARCHITECT OF RECORD:
AAI ARCHITECTS, P.C.
14 Wall Street, 2nd Floor
New York, NY 10005
TEL: 212-964-4040 FAX: 212-964-4090

INTERIOR DESIGNER:
MEYER DAVIS
180 Varick St, suite 404
New York, NY 10014
TEL: 212-627-5574

LANDSCAPE DESIGNER:
WEST 8 URBAN DESIGN & LANDSCAPE ARCHITECTURE P.C.
333 Hudson Street, Suite 905
New York, NY 10013
TEL: 212-285-0088 FAX: 212-285-0228

STRUCTURAL ENGINEERS:
WSP
228 East 45th Street
New York, NY 10017
TEL: 212-687-9888 FAX: 646-487-5501

MEP ENGINEERS:
ICOR ASSOCIATES, LLC
485 C Route 1 South, Suite 200
Iselin, NJ 08830
TEL: 908-272-3300 FAX: 908-272-4440

GEOTECHNICAL ENGINEERS:
LANGAN ENGINEERING & ENVIRONMENTAL SERVICES
21 Penn Plaza - 360 West 31st Street, 8th Floor
New York, NY 10001
TEL: 212.479.5400 FAX: 212.479.5444

No.	DESCRIPTION:	DATE:
1	STEEL BID PACKAGE	02-24-15
2	CONCRETE BID PACKAGE	03-06-15
3	ISSUED FOR FILING	03-26-15

Discrepancies must be reported immediately to the Architect before proceeding. Only figured dimensions are to be used. Contractors must check all dimensions on site. This drawing is protected by copyright.

ALL DIMENSIONS ARE SHOWN IN IMPERIAL.

CONSULTANT:
AAI ARCHITECTS, P.C.

PROJECT:
250 SOUTH STREET
NEW YORK, NY

DRAWING TITLE:
SUPERSTRUCTURE
SECTIONS

SEAL & SIGNATURE:
STATE OF NEW YORK · AHMAD RAHIMZADEH · No. 086527 · LICENSED PROFESSIONAL ENGINEER

DATE:	07/25/14
PROJECT No:	1302510
DRAWN: CADD	REV:
CHK: CL	
SCALE: N.T.S.	
DWG No:	**S-970.00**
DOB PAGE No: of	

DOB EMPLOYEE STAMP:
Damian Titus
NYC Buildings
APPROVED
Under Directive 2 of 1975
Date: 05/21/2015:
NYC Development Hub

DOB B-SCAN:

FILE NAME:
PLOT DATE:

DEPT OF BLDGS 121185528 Job Number
ES418196819 Scan Code

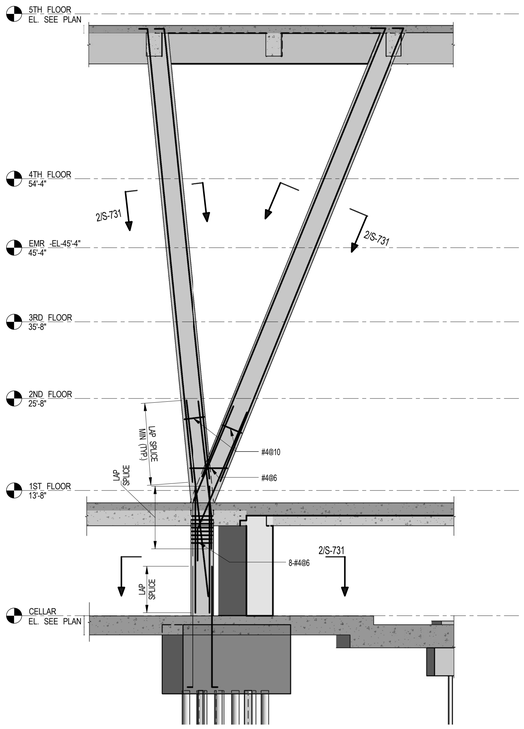

1 S-971 S-971/1-SECTION
SCALE: 1/8" = 1'-0"

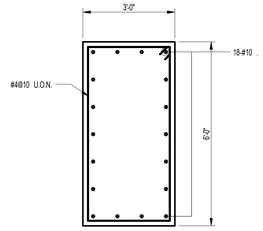

2 S-971 SECTION
SCALE: 1/2" = 1'-0"

KEY PLAN:

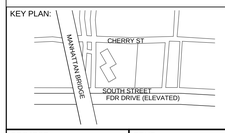

PROJECT NORTH

TRUE NORTH

DEVELOPER:
EXTELL DEVELOPMENT COMPANY
805 Third Ave, 7th Floor
New York, NY 10022
TEL: 212-712-6000 FAX: 212-712-6100

ARCHITECT OF RECORD:
AAI ARCHITECTS, P.C.
14 Wall Street, 2nd Floor
New York, NY 10005
TEL: 212-964-4040 FAX: 212-964-4090

INTERIOR DESIGNER:
MEYER DAVIS
180 Varick St, suite 404
New York, NY 10014
TEL: 212-627-5574

LANDSCAPE DESIGNER:
WEST 8 URBAN DESIGN & LANDSCAPE ARCHITECTURE P.C.
333 Hudson Street, Suite 905
New York, NY 10013
TEL: 212-285-0088 FAX: 212-285-0228

STRUCTURAL ENGINEERS:
WSP
228 East 45th Street
New York, NY 10017
TEL: 212-687-9888 FAX: 646-487-5501

MEP ENGINEERS:
ICOR ASSOCIATES, LLC
485 C Route 1 South, Suite 200
Iseline, NJ 08830
TEL: 908-272-3300 FAX: 908-272-4440

GEOTECHNICAL ENGINEERS:
LANGAN ENGINEERING & ENVIRONMENTAL SERVICES
21 Penn Plaza - 360 West 31st Street, 8th Floor
New York, NY 10001
TEL: 212.479.5400 FAX: 212.479.5444

No.	DESCRIPTION:	DATE:
1	CONCRETE BID PACKAGE	03-06-15
2	ISSUED FOR FILING	03-26-15

Discrepancies must be reported immediately to the Architect before proceeding. Only figured dimensions are to be used. Contractors must check all dimensions on site. This drawing is protected by copyright.

ALL DIMENSIONS ARE SHOWN IN IMPERIAL.

CONSULTANT:
AAI ARCHITECTS, P.C.

PROJECT:
250 SOUTH STREET
NEW YORK, NY

DRAWING TITLE:
SUPERSTUCTURE SECTIONS 2

SEAL & SIGNATURE:

DATE:	02/25/15
PROJECT No:	1302510
DRAWN: CAD	REV:
CHK: CL	
SCALE: As indicated	
DWG No:	**S-971.00**
DOB PAGE No:	of

DOB EMPLOYEE STAMP:

DOB B-SCAN:

PROGRESS PRINT 03/06/15

30" x 42" Arch E1 - SHEET SIZE
FILE NAME:
PLOT DATE:

DEPT OF BLDGS 121185528 Job Number
ES664778136 Scan Code

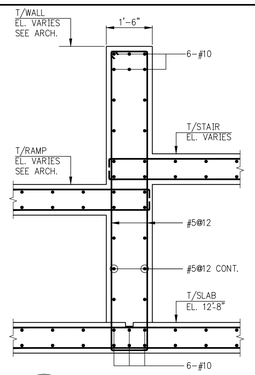

1 S-972 SECTION @ 1ST FLOOR
SCALE: ½"=1'-0"

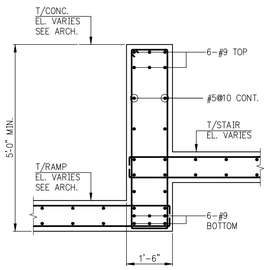

2 S-972 SECTION
SCALE: ½"=1'-0"

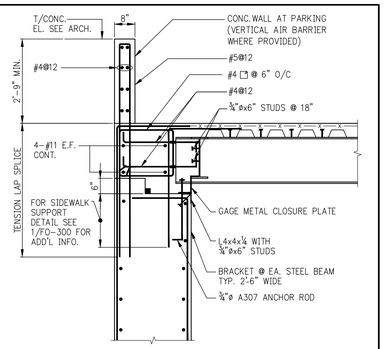

4 S-972 TYPICAL STEEL BEAM SUPPORT WITH PARAPET
SCALE: ½"=1'-0"

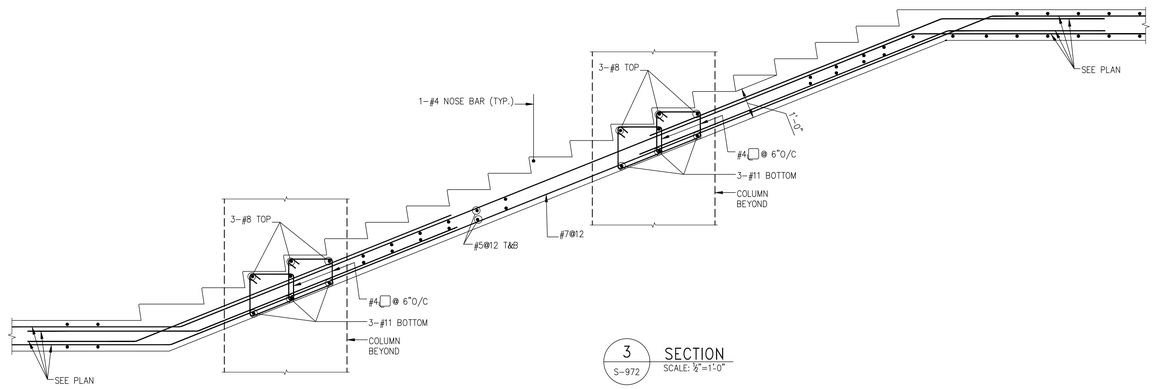

3 S-972 SECTION
SCALE: ½"=1'-0"

KEY PLAN:

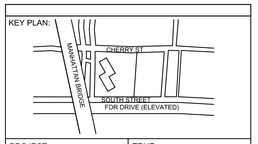

PROJECT NORTH

TRUE NORTH

DEVELOPER:
EXTELL DEVELOPMENT COMPANY
805 Third Ave, 7th Floor
New York, NY 10022
TEL: 212-712-6000 FAX: 212-712-6100

ARCHITECT OF RECORD:
AAI ARCHITECTS, P.C.
14 Wall Street, 2nd Floor
New York, NY 10005
TEL: 212-964-4040 FAX: 212-964-4090

INTERIOR DESIGNER:
MEYER DAVIS
180 Varick St, suite 404
New York, NY 10014
TEL: 212-627-5574

LANDSCAPE DESIGNER:
WEST 8 URBAN DESIGN & LANDSCAPE ARCHITECTURE P.C.
333 Hudson Street, Suite 905
New York, NY 10013
TEL: 212-285-0088 FAX: 212-285-0228

STRUCTURAL ENGINEERS:
WSP
228 East 45th Street
New York, NY 10017
TEL: 212-687-9888 FAX: 646-487-5501

MEP ENGINEERS:
ICOR ASSOCIATES, LLC
485 C Route 1 South, Suite 200
Iseline, NJ 08830
TEL: 908-272-3300 FAX: 908-272-4440

GEOTECHNICAL ENGINEERS:
LANGAN ENGINEERING & ENVIRONMENTAL SERVICES
21 Penn Plaza - 360 West 31st Street, 8th Floor
New York, NY 10001
TEL: 212.479.5400 FAX: 212.479.5444

No.	DESCRIPTION:	DATE:
1	CONCRETE BID PACKAGE	03-06-15
2	ISSUED FOR FILING	03-26-15

Discrepancies must be reported immediately to the Architect before proceeding. Only figured dimensions are to be used. Contractors must check all dimensions on site. This drawing is protected by copyright.

ALL DIMENSIONS ARE SHOWN IN IMPERIAL.

CONSULTANT:
AAI ARCHITECTS, P.C.

PROJECT:
250 SOUTH STREET
NEW YORK, NY

DRAWING TITLE:
SUPERSTRUCTURE SECTIONS

SEAL & SIGNATURE:

DATE:	07/25/14
PROJECT No:	1302510
DRAWN: CADD	REV:
CHK: CL	
SCALE: N.T.S.	
DWG No:	S-972.00
DOB PAGE No:	of

DOB EMPLOYEE STAMP:

DOB B-SCAN:

30" x 42" Arch E1 - SHEET SIZE

FILE NAME:
PLOT DATE:

DEPT OF BLDGS121105029 Job Number
ES182284488 Scan Code

30" x 42" Arch E1 - SHEET SIZE

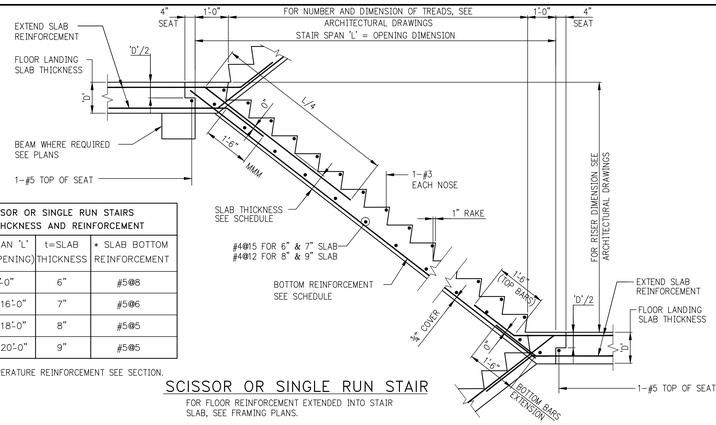

SCISSOR OR SINGLE RUN STAIRS SLAB THCKNESS AND REINFORCEMENT		
CLEAR SPAN 'L' (HORIZ. OPENING)	t=SLAB THICKNESS	• SLAB BOTTOM REINFORCEMENT
UP TO 13'-0"	6"	#5@8
13'-1" TO 16'-0"	7"	#5@6
16'-1" TO 18'-0"	8"	#5@5
18'-1" TO 20'-0"	9"	#5@5

• FOR TEMPERATURE REINFORCEMENT SEE SECTION.

SCISSOR OR SINGLE RUN STAIR

FOR FLOOR REINFORCEMENT EXTENDED INTO STAIR SLAB, SEE FRAMING PLANS.

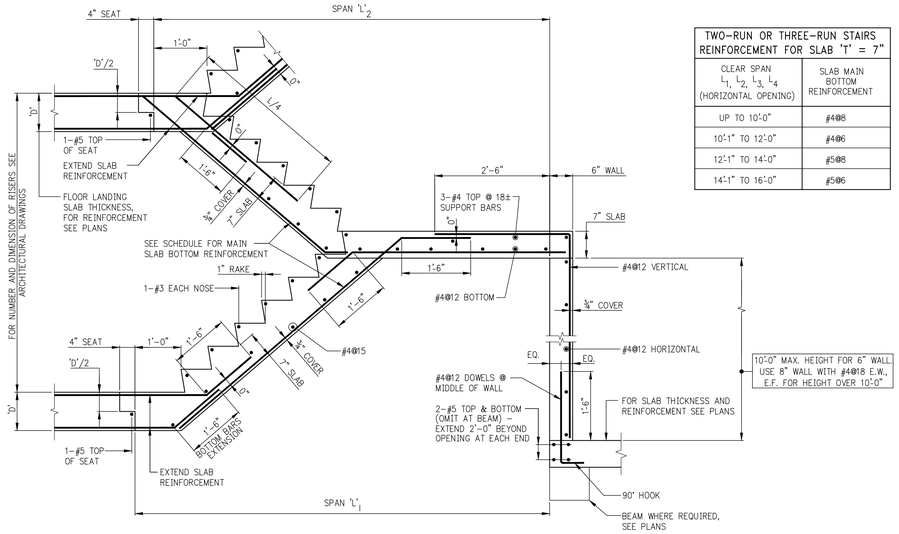

TWO-RUN OR THREE-RUN STAIRS REINFORCEMENT FOR SLAB 't' = 7"	
CLEAR SPAN L_1, L_2, L_3, L_4 (HORIZONTAL OPENING)	SLAB MAIN BOTTOM REINFORCEMENT
UP TO 10'-0"	#4@8
10'-1" TO 12'-0"	#4@6
12'-1" TO 14'-0"	#5@8
14'-1" TO 16'-0"	#5@6

TWO-RUN STAIR

THREE-RUN STAIR

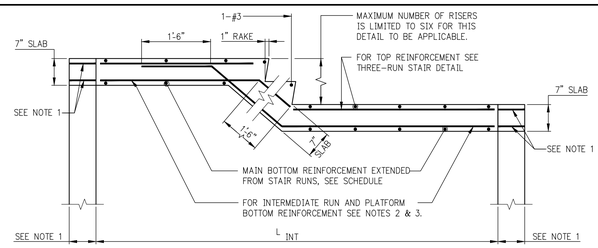

SECTION Y-Y

(AT THREE-RUN STAIR)

NOTES:

1. EXTEND SLAB AND REINFORCEMENT OVER SUPPORT WALLS WHERE WALLS ARE SHOWN ON PLANS.
2. WHERE L_{INT} IS NOT SUPPORTED AT ENDS, PROVIDE: #4@12 BOTTOM
3. WHERE L_{INT} IS SUPPORTED, PROVIDE: #4@8 FOR L_{INT} UP TO 10'-0", #4@6 FOR L_{INT} BETWEEN 10'-1" AND 12'-0". FOR L_{INT} SPANNING MORE THAN 12'-0", DESIGNER TO PROVIDE DETAILS.

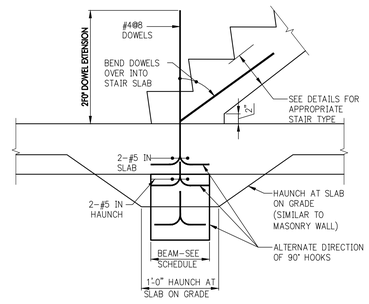

BOTTOM OF STAIR-NO SLAB OPENING

KEY PLAN:

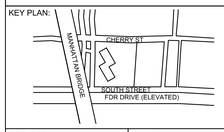

PROJECT NORTH / TRUE NORTH

DEVELOPER:
EXTELL DEVELOPMENT COMPANY
805 Third Ave, 7th Floor
New York, NY 10022
TEL: 212-712-6000 FAX: 212-712-6100

ARCHITECT OF RECORD:
AAI ARCHITECTS, P.C.
14 Wall Street, 2nd Floor
New York, NY 10005
TEL: 212-964-4040 FAX: 212-964-4090

INTERIOR DESIGNER:
MEYER DAVIS
180 Varick St, suite 404
New York, NY 10014
TEL: 212-627-5574

LANDSCAPE DESIGNER:
WEST 8 URBAN DESIGN & LANDSCAPE ARCHITECTURE P.C.
333 Hudson Street, Suite 905
New York, NY 10013
TEL: 212-285-0088 FAX: 212-285-0228

STRUCTURAL ENGINEERS:
WSP
228 East 45th Street
New York, NY 10017
TEL: 212-687-9888 FAX: 646-487-5501

MEP ENGINEERS:
ICOR ASSOCIATES, LLC
485 C Route 1 South, Suite 200
Iseline, NJ 08830
TEL: 908-272-3300 FAX: 908-272-4440

GEOTECHNICAL ENGINEERS:
LANGAN ENGINEERING & ENVIRONMENTAL SERVICES
21 Penn Plaza - 360 West 31st Street, 8th Floor
New York, NY 10001
TEL: 212.479.5400 FAX: 212.479.5444

No.	DESCRIPTION:	DATE:
1	50% DD	08-01-14
2	DESIGN DEVELOPMENT	10-07-14
3	CONCRETE BID PACKAGE	03-06-15
4	ISSUED FOR FILING	03-26-15

Discrepancies must be reported immediately to the Architect before proceeding. Only figured dimensions are to be used. Contractors must check all dimensions on site. This drawing is protected by copyright.

ALL DIMENSIONS ARE SHOWN IN IMPERIAL.

CONSULTANT:
AAI ARCHITECTS, P.C.

PROJECT:
250 SOUTH STREET
NEW YORK, NY

DRAWING TITLE:
TYPICAL STAIR DETAILS

SEAL & SIGNATURE:

DATE:	07/25/14
PROJECT No:	1302510
DRAWN: CADD	REV:
CHK: CL	
SCALE: N.T.S.	
DWG No:	**S-980.00**
DOB PAGE No:	of

DOB EMPLOYEE STAMP:

DOB B-SCAN:

FILE NAME:
PLOT DATE:

DEPT OF BLDGS 121185528 Job Number
ES771742094 Scan Code

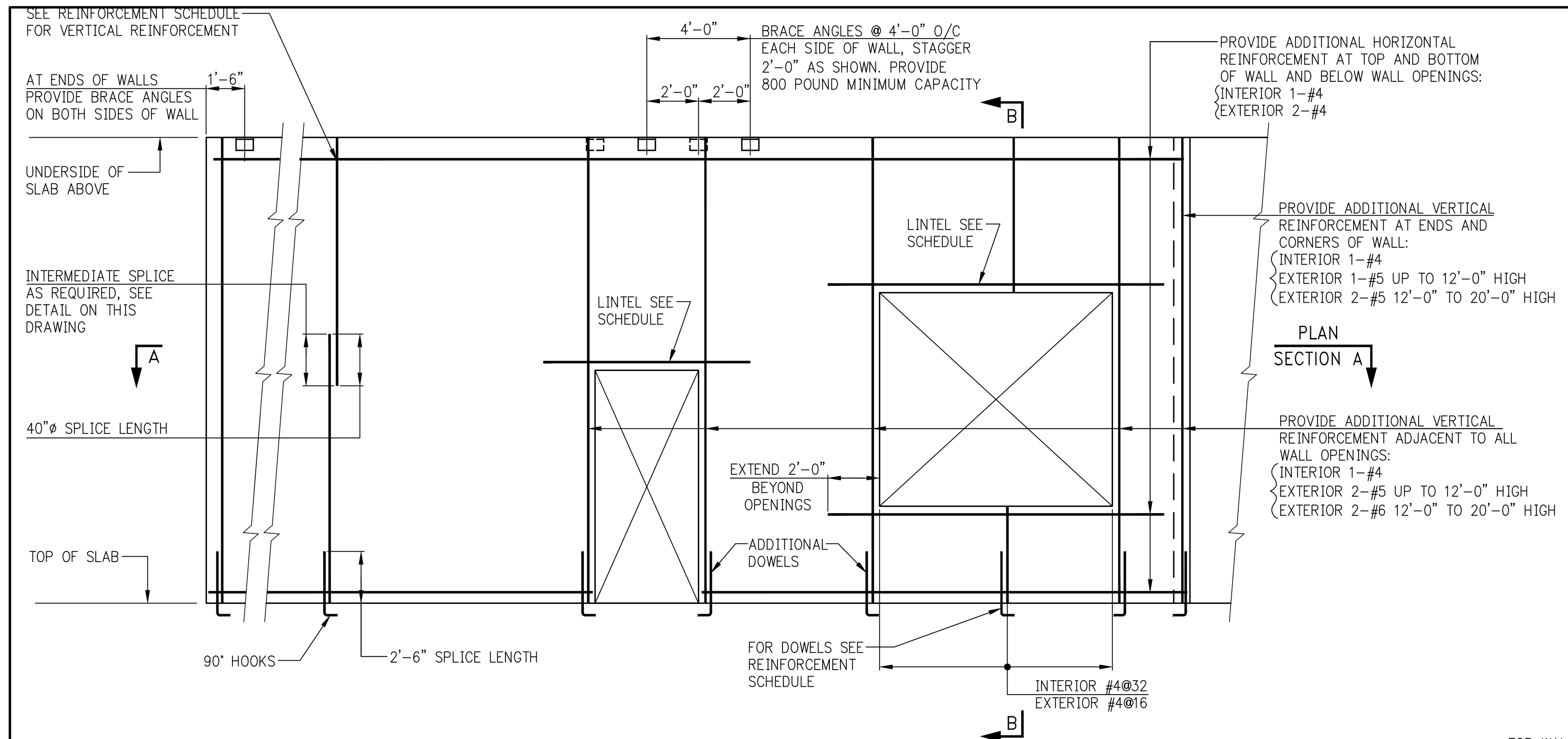

WALL REINFORCEMENT ELEVATION

NOTES:
1. ABOVE DETAIL APPLIES TO ALL MASONRY (C.M.U.) WALLS.
2. FOR MULTIWYTHE EXTERIOR WALLS ABOVE DETAIL APPLIES TO C.M.U. BACKUP WALL ONLY. SEE SECTION BELOW FOR ADDITIONAL INFORMATION

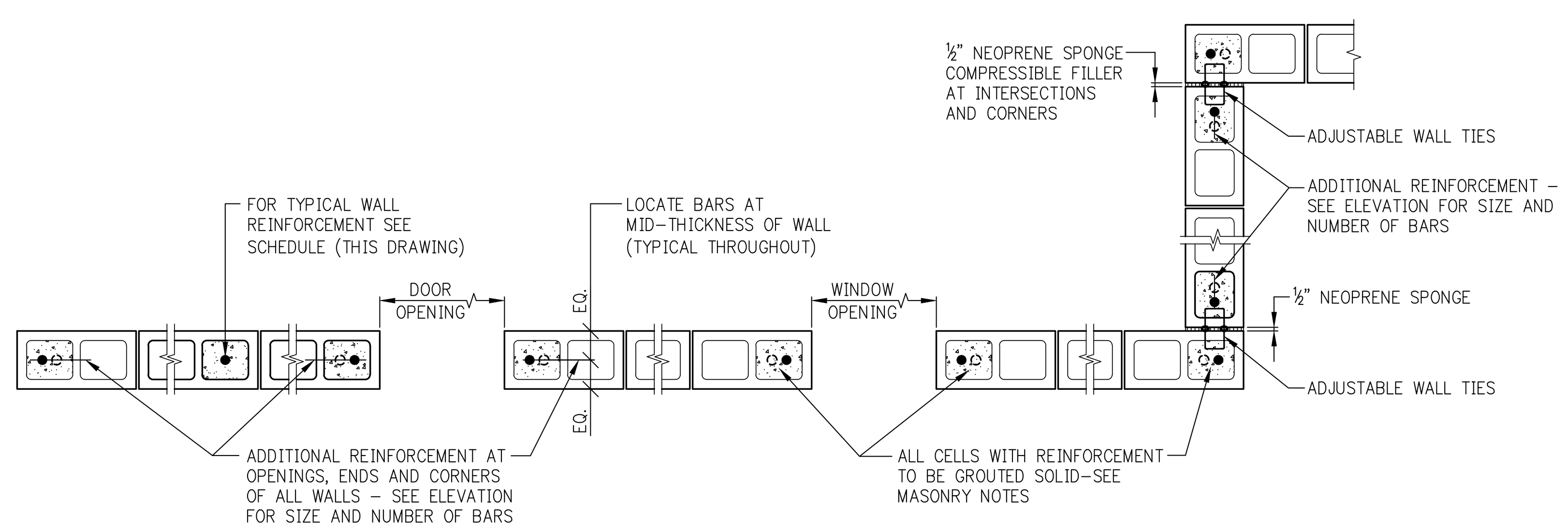

PLAN SECTION A

(FOR DOWELS SEE ELEVATION)

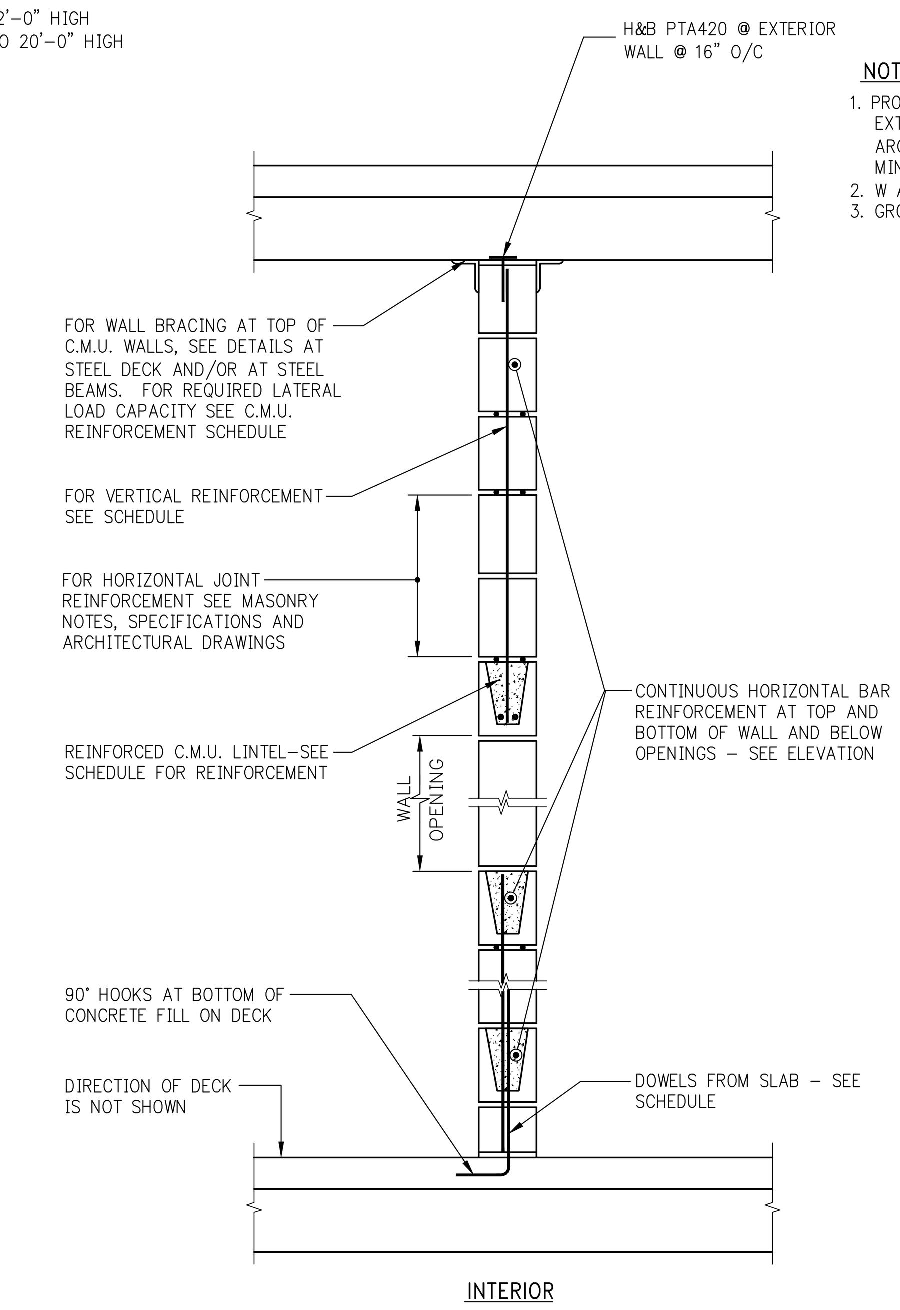

SECTION B

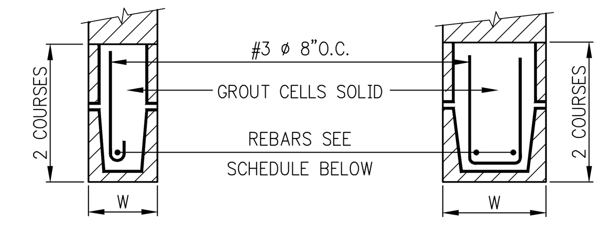

TWO COURSE (16" DEEP) LINTELS

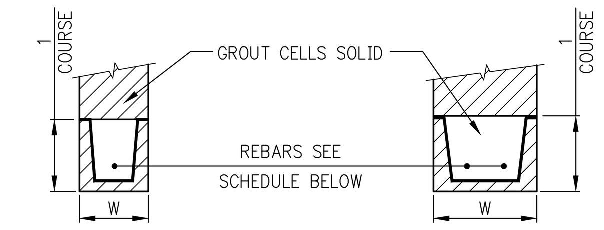

SINGLE COURSE (8" DEEP) LINTELS

NOTES:
1. PROVIDE BLOCK LINTELS FOR ALL OPENINGS IN INTERIOR BLOCK PARTITIONS, AND EXTERIOR WALLS FOR WHICH STEEL LINTELS ARE NOT SHOWN. REFER TO ARCHITECTURAL DRAWINGS FOR SIZE AND LOCATION OF OPENINGS. PROVIDE 8" MINIMUM BEARING AT EACH END.
2. W AS PER TABLE (FIRST DIMENSION).
3. GROUT SHALL BE FINE ONLY.

TYPE OF LOADING *	LINTEL SECTION NOMINAL SIZE (IN.)	REQUIRED REINFORCEMENT CLEAR SPAN 3'-4"	4'-0"	4'-8"	5'-4"	6'-0"	6'-8"	7'-4"	8'-0"	10'-0"
WALL LOADS	6x8	1-#4	1-#4	1-#4	2-#4	2-#5	–	–	–	–
	6x16	–	–	–	–	2-#4	2-#4	2-#4	2-#4	2-#5
FLOOR & ROOF LOADS	6x16	1-#4	1-#4	1-#4	1-#5	2-#4	2-#4	2-#5	2-#5	2-#6
WALL LOADS	8x8	1-#4	2-#4	2-#4	2-#4	2-#4	2-#5	2-#6	–	–
	8x16	–	–	–	–	–	–	2-#5	2-#5	2-#6
FLOOR & ROOF LOADS	8x8	2-#4	–	–	–	–	–	–	–	–
	8x16	2-#4	2-#4	2-#4	2-#4	2-#4	2-#4	2-#5	2-#5	2-#6

(*) INCLUDES WEIGHT OF LINTEL

NOTES:
1. WALL LOADS ASSUMED 300lbs. PER LINEAR FOOT.
2. FLOOR & ROOF LOADS INCLUDING WALL LOADS ASSUMED 1000lbs. PER LINEAR FOOT.
3. 8" LINTELS ASSUMED TO WEIGH 50#/FT.
4. 16" LINTELS ASSUMED TO WEIGH 100#/FT.
5. IF ACTUAL LOADS EXCEED THOSE ASSUMED, CONTRACTOR IS TO OBTAIN DIRECTION FROM THE ENGINEER.
6. FOR LINTELS OVER 10'-0" LONG, CONTRACTOR IS TO OBTAIN DIRECTION FROM THE ENGINEER.

REINFORCED BLOCK LINTEL

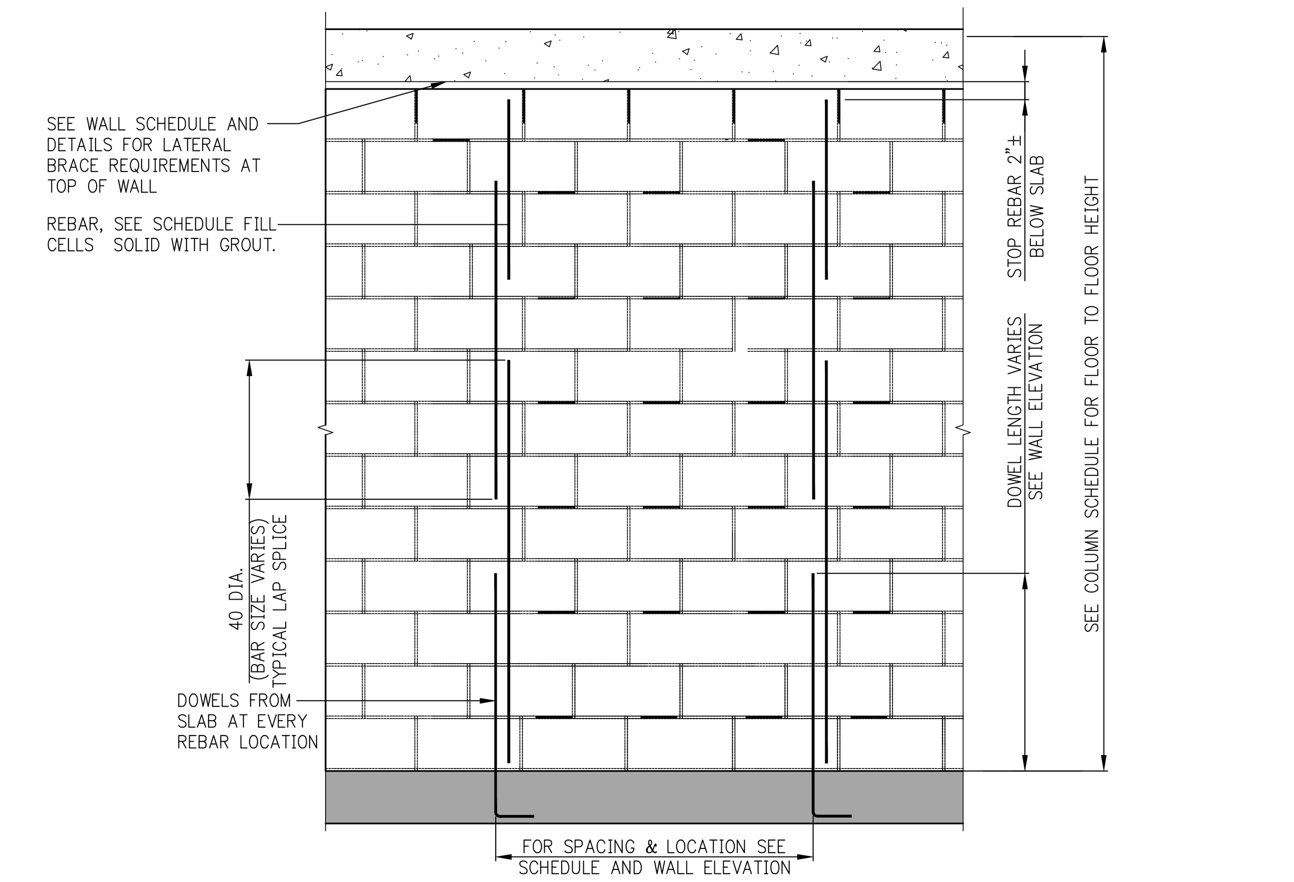

SPLICE LENGTH OF REBAR IN CMU WALL

C.M.U. WALL REINFORCEMENT SCHEDULE (AND LATERAL BRACING LOAD AT TOP)					
LOCATION AND HEIGHT OF WALL	MINIMUM BLOCK THICKNESS	VERTICAL REINFORCEMENT	DOWELS FROM SLAB	LATERAL BRACING FORCE (TOP) #/FOOT	REMARKS
INTERIOR UP TO 16'-0"	6"	#4@48	#4@48		
INTERIOR 16'-1" TO 20'-0"	8"	#4@48	#4@48		
EXTERIOR UP TO 10'-0"	6"	#4@32	#4@16		
EXTERIOR 10'-1" TO 12'-0"	8"	#4@32	#4@16		*
EXTERIOR 12'-1" TO 16'-0"	8"	#4@16	#5@16		*
EXTERIOR 16'-1" TO 20'-0"	12"	#4@16	#5@16		*
EXTERIOR CANTILEVER (PARAPET, ETC.) UP TO 8'-0"	8"	#4@16	#5@16		*

* APPLICABLE FOR LATERAL LOAD UP TO 25 PSF

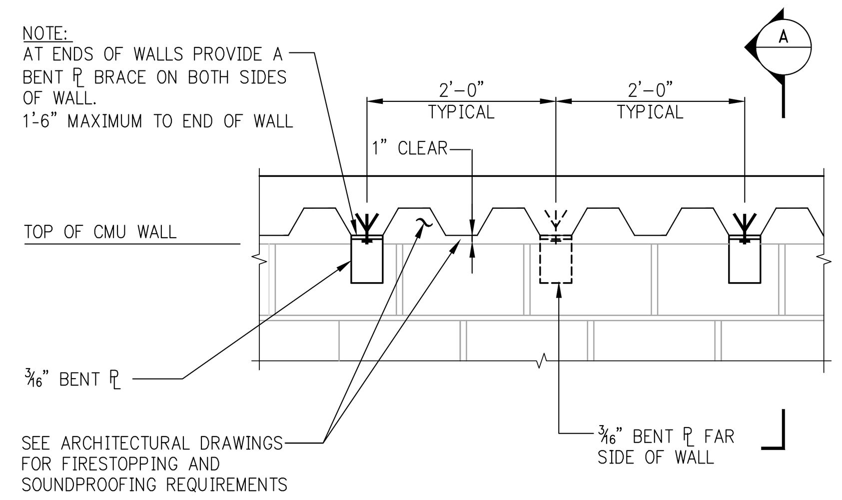

LATERAL BRACE AT TOP OF CMU WALL PERPENDICULAR TO STEEL DECK

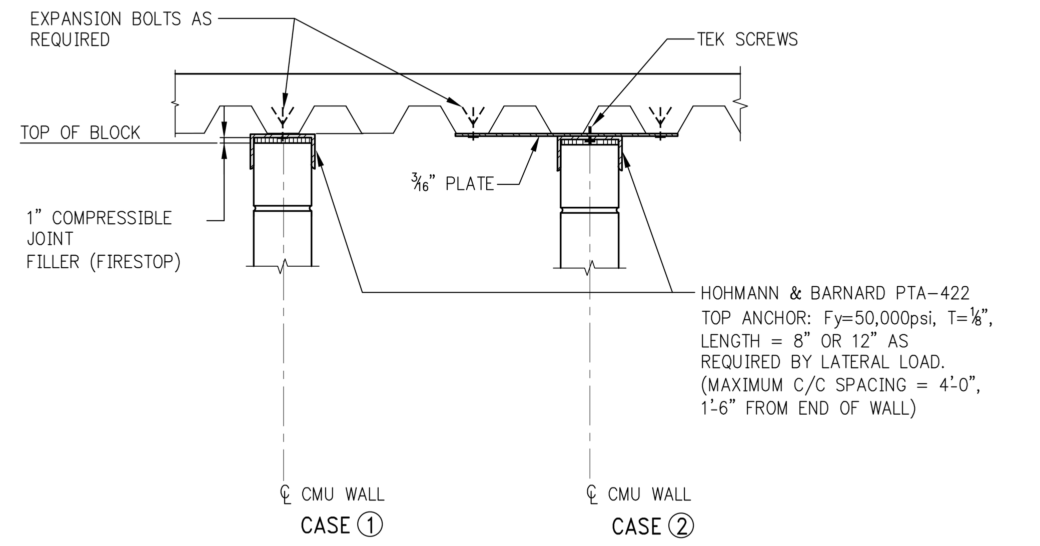

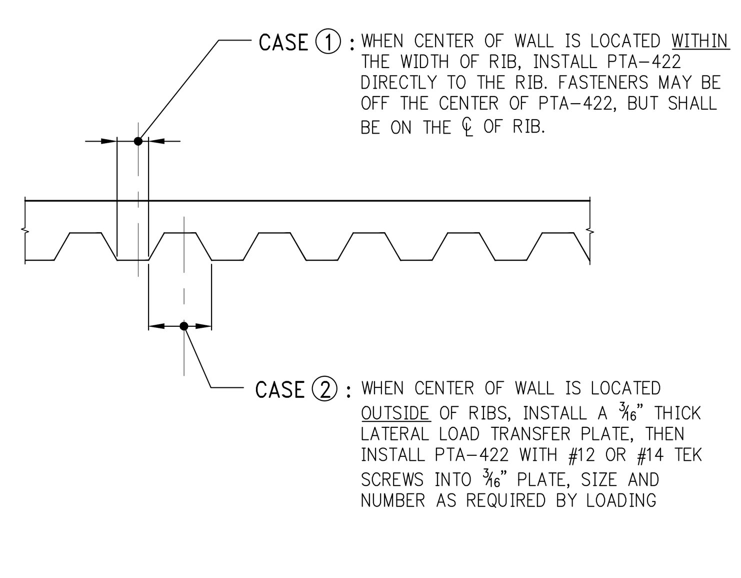

LATERAL BRACE AT TOP OF CMU WALL PARALLEL TO STEEL DECK

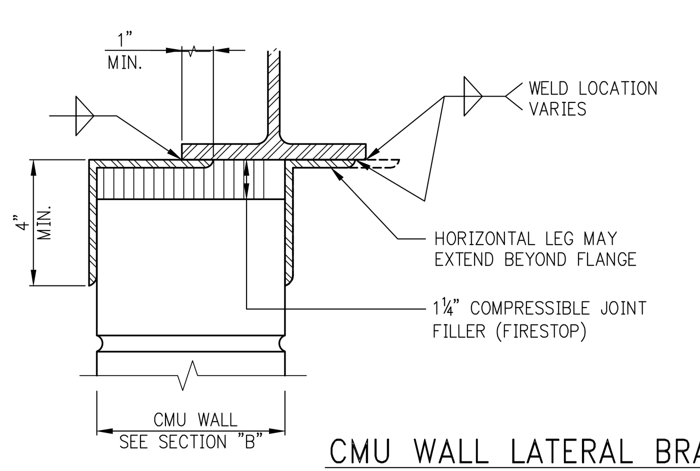

CMU WALL LATERAL BRACES AT UNDERSIDE OF STEEL BEAM

NOTES:
1. HORIZONTAL LEG LENGTH REQUIRED WILL VARIES AS A FUNCTION OF:
   a. BEAM FLANGE WIDTH
   b. CMU WALL THICKNESS.
   c. POSITION OF CMU WALL IN RELATION TO BEAM FLANGE.
2. THE APPROPRIATE HORIZONTAL LEG DIMENSION SHALL BE DETERMINED BY THE STEEL FABRICATOR.
3. THE VERTICAL LEG MUST BE A MINIMUM OF 4" LONG.
4. ANGLE THICKNESS MAY BE THE MINIMUM FOR EACH ANGLE SIZE.
5. LENGTH OF CLIPS (BRACES) TO BE 4", SPACED AT 4'-0" O/C- STAGGER OPPOSITE SIDES TO PROVIDE CLEARANCE FOR WELDING AND CMU ERECTION.

LOOSE LINTEL SCHEDULE (ANGLES OR W-SHAPE PLUS PLATE)		
MASONRY OPENING	ANGLE SIZE PER EACH 4" WIDTH OF MASONRY (OR W + ℄)	ANGLE SIZE FOR 6" WIDTH OF MASONRY
UP TO 5'-0"	L3½ x 3½ x 5/16	L6 x 4 x ⅜
5'-1" TO 8'-0"	L6 x 3½ x 5/16	L6 x 4 x ½
8'-1" TO 10'-8"	L6 x 3½ x ⅜	–
10'-9" TO 14'-0"	W8x15 + BOTTOM ℄ ⅜ x 7 (WELD PLATE TO BOTTOM FLANGE)	–

NOTES:
1. ANGLE LENGTH = MASONRY OPENING PLUS 1'-0" (6" BEARING AT EACH END).
2. ANGLE LONG LEG IS VERTICAL.
3. W8 + ℄ TO BE USED AT 8" WIDE WALL ONLY.
4. PROVIDE FIREPROOFING ON LINTELS FOR MASONRY OPENINGS GREATER THAN 4'-0", AS REQUIRED BY CODE.
5. JOINTS SHALL NOT BE LOCATED OVER THE MASONRY OPENING.

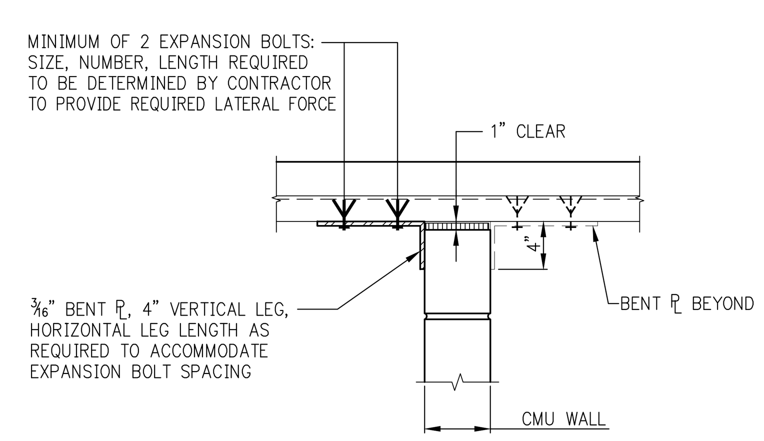

SECTION "A" THROUGH CMU WALL PERPENDICULAR TO STEEL DECK

KEY PLAN:

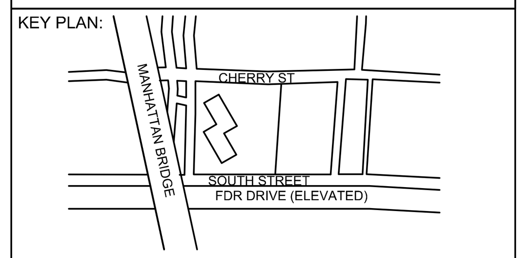

PROJECT NORTH | TRUE NORTH

DEVELOPER:
EXTELL DEVELOPMENT COMPANY
805 Third Ave, 7th Floor
New York, NY 10022
TEL: 212-712-6000 FAX: 212-712-6100

ARCHITECT OF RECORD:
AAI ARCHITECTS, P.C.
14 Wall Street, 2nd Floor
New York, NY 10005
TEL: 212-964-4040 FAX: 212-964-4090

INTERIOR DESIGNER:
MEYER DAVIS
180 Varick St, suite 404
New York, NY 10014
TEL: 212-627-5574

LANDSCAPE DESIGNER:
WEST 8 URBAN DESIGN & LANDSCAPE ARCHITECTURE P.C.
333 Hudson Street, Suite 905
New York, NY 10013
TEL: 212-285-0088 FAX: 212-285-0228

STRUCTURAL ENGINEERS:
WSP
228 East 45th Street
New York, NY 10017
TEL: 212-687-9888 FAX: 646-487-5501

MEP ENGINEERS:
ICOR ASSOCIATES, LLC
485 C Route 1 South, Suite 200
Iseline, NJ 08830
TEL: 908-272-3300 FAX: 908-272-4440

GEOTECHNICAL ENGINEERS:
LANGAN ENGINEERING & ENVIRONMENTAL SERVICES
21 Penn Plaza - 360 West 31st Street, 8th Floor
New York, NY 10001
TEL: 212.479.5400 FAX: 212.479.5444

No.	DESCRIPTION:	DATE:
1	CONCRETE BID PACKAGE	03-06-15
2	ISSUED FOR FILING	03-26-15

Discrepancies must be reported immediately to the Architect before proceeding. Only figured dimensions are to be used. Contractors must check all dimensions on site. This drawing is protected by copyright.

ALL DIMENSIONS ARE SHOWN IN IMPERIAL.

CONSULTANT: AAI ARCHITECTS, P.C.

PROJECT:
250 SOUTH STREET
NEW YORK, NY

DRAWING TITLE:
TYPICAL MASONRY DETAILS 1

SEAL & SIGNATURE: STATE OF NEW YORK AHMAD RAHIMIAN No. 065537 LICENSED PROFESSIONAL ENGINEER

DATE:	07/25/14
PROJECT No:	1302510
DRAWN:	CADD
CHK:	CL
SCALE:	N.T.S.
REV:	
DWG No:	**S-985.00**
DOB PAGE No:	of

DOB EMPLOYEE STAMP: Damian Titus
Buildings APPROVED Under Directive 2 of 1975
Date: 05/21/2015:
NYC Development Hub

DOB B-SCAN:

FILE NAME:
PLOT DATE:
30" x 42" Arch E1 -SHEET SIZE